財團法人驗船中心
CR CLASSIFICATION SOCIETY

RULES FOR THE CONSTRUCTION AND CLASSIFICATION OF STEEL SHIPS 2022

PART I – CLASSIFICATION AND SURVEY

July 2022

財團法人驗船中心
CR CLASSIFICATION SOCIETY

RULES FOR THE CONSTRUCTION AND CLASSIFICATION OF STEEL SHIPS 2022

PART I – CLASSIFICATION AND SURVEY

July 2022

RULES FOR THE CONSTRUCTION AND CLASSIFICATION OF STEEL SHIPS

PART I CLASSIFICATION AND SURVEY

PART II HULL CONSTRUCTION AND EQUIPMENT

PART III SPECIAL SERVICE AND TYPE OF SHIPS

PART IV MACHINERY INSTALLATIONS – CONSTRUCTION AND SHAFTING

PART V BOILERS, PRESSURE VESSELS, THERMAL OIL HEATERS AND INCINERATORS

PART VI PIPING AND PUMPING SYSTEMS

PART VII ELECTRICAL INSTALLATIONS

PART VIII AUTOMATIC OR REMOTE CONTROL AND MONITORING SYSTEMS

PART IX FIRE PROTECTION, DETECTION AND EXTINCTION

PART X REFRIGERATED CARGO INSTALLATIONS

PART XI MATERIALS

PART XII WELDING

PART XIII NAVIGATIONAL SAFETY SYSTEMS

PART XIV GOAL-BASED SHIP CONSTRUCTION STANDARDS SHIPS

PART XV HULL CONSTRUCTION AND EQUIPMENT FOR SHIPS LESS THAN 90 M IN LENGTH

List of major changes in Part I from 2019 edition

1.1.4	Amend No.1	2.3.3	Amend No.1
1.2	Amend No.1	2.3.4~2.3.6	Amend No.1
1.4.3	Amend No.1	2.3.7	Amend No.1
1.5	Amend No.1	2.4.1	Amend No.1
1.6.2	Amend No.1	2.5.1	Amend No.1
1.6.3	Amend No.1	2.5.1(r)	Amend No.1
1.6.4	Amend No.1	2.5.2(f)	Amend No.1
1.6.5	Amend No.1	2.5.5~2.5.12	Amend No.1
1.6.6	Amend No.1	2.6.1~2.6.2	Amend No.1
1.6.7	Amend No.1	2.6.1~2.6.2	Amend No.1
1.6.8	Amend No.1	2.6.3~2.6.4	Amend No.1
1.6.9	Amend No.1	2.6.7~2.6.14	Amend No.1
1.13	Amend No.1	2.6.13	Amend No.1
1.14	Amend No.1	2.7	Amend No.1
1.17.1(a)(iii)	Amend No.1	2.7.2~2.7.5	Amend No.1
Table I 1-3	Amend No.1	2.7.6~2.7.9	Amend No.1
Table I 1-4	Amend No.1	2.7.10~2.7.18	Amend No.1
Table I 1-6	Amend No.1	2.8	Amend No.1
2.1.1(f)	Amend No.1	2.9	Amend No.1
2.1.2	Amend No.1	2.10	Amend No.1
2.1.3	Amend No.1	2.11~2.12	Amend No.1
2.1.3	Amend No.1	2.11	Amend No.1
2.1.4	Amend No.1	2.12	Amend No.1
2.1.5	Amend No.1	2.13	Amend No.1
2.2.1	Amend No.1	2.14	Amend No.1
2.2.2	Amend No.1	2.15	Amend No.1
2.3	Amend No.1	2.16	Amend No.1
2.3.1~2.3.2	Amend No.1	2.16	Amend No.1

2.18.3	Amend No.1	Table I 2-17	Amend No.1
Chapter 3	Amend No.1	Table I 2-18	Amend No.1
3.1	Amend No.1	Table I 2-19	Amend No.1
3.4	Amend No.1	Table I 2-20	Amend No.1
Table I 2-1A	Amend No.1	Table I 2-21	Amend No.1
Table I 2-1B	Amend No.1	Table I 2-22	Amend No.1
Table I 2-1C	Amend No.1	Table I 2-23	Amend No.1
Table I 2-2A	Amend No.1	Table I 2-24	Amend No.1
Table I 2-2B	Amend No.1	Table I 2-25	Amend No.1
Table I 2-2C	Amend No.1	Table I 2-26	Amend No.1
Table I 2-3A	Amend No.1	Table I 2-27A	Amend No.1
Table I 2-3B	Amend No.1	Table I 2-27B	Amend No.1
Table I 2-3C	Amend No.1	Table I 2-27C	Amend No.1
Table I 2-4A	Amend No.1	Table I 2-27D	Amend No.1
Table I 2-4B	Amend No.1	Table I 2-28	Amend No.1
Table I 2-4C	Amend No.1	Table I 2-29A	Amend No.1
Table I 2-5A	Amend No.1	Table I 2-29B	Amend No.1
Table I 2-5B	Amend No.1	Table I 2-29C	Amend No.1
Table I 2-6A	Amend No.1	Table I 2-28	Amend No.1
Table I 2-6B	Amend No.1	Table I 2-29	Amend No.1
Table I 2-7	Amend No.1	Table I 2-30	Amend No.1
Table I 2-8	Amend No.1	Table I 2-31	Amend No.1
Table I 2-9	Amend No.1	Table I 2-32	Amend No.1
Table I 2-10	Amend No.1	A2.2.2(c)	Amend No.1
Table I 2-11	Amend No.1	Appendix 3	Amend No.1
Table I 2-12	Amend No.1	Appendix 4	Amend No.1
Table I 2-13	Amend No.1	1.6.4(d)(iii)	Amend No.2
Table I 2-14	Amend No.1	1.6.4(h)(i)(5)	Amend No.2
Table I 2-15	Amend No.1	1.6.7(a)(ii)	Amend No.2
Table I 2-16	Amend No.1	1.15.1(d)	Amend No.2

Table I 1-2	Amend No.2	2.7.1(m)	Amend No.2
Table I 1-3	Amend No.2	2.7.1(p)	Amend No.2
Table I 1-5	Amend No.2	2.7.2(k) & (n)	Amend No.2
Table I 1-6	Amend No.2	2.7.2 (r)(vi) & (vii)	Amend No.2
2.1.4(a)(ix)	Amend No.2	2.8.3	Amend No.2
2.1.6(a)(iv)	Amend No.2	2.10.3(a)(viii)	Amend No.2
2.1.6(e)(ii)(2)	Amend No.2	2.14.3(a)(ii)	Amend No.2
2.1.6(f)(vi)	Amend No.2	2.14.3(d)(ii)	Amend No.2
2.1.6(g)	Amend No.2	2.14.3(e)(i)	Amend No.2
2.2.1(h)	Amend No.2	2.16.2(a)(ii)	Amend No.2
2.2.1 (i)	Amend No.2	2.17.2(a)(i)	Amend No.2
2.2.2	Amend No.2	2.17.3(b)	Amend No.2
2.2.2(b)(iii) & (iv)	Amend No.2	2.19	Amend No.2
2.2.2(c)	Amend No.2	Table I 2-5A	Amend No.2
2.2.2(d) & (e)	Amend No.2	Table I 2-18	Amend No.2
2.2.3	Amend No.2	Table I 2-27~2-31	Amend No.2
2.3.5(a)	Amend No.2	Table I 2-27~2-29	Amend No.2
2.3.5(e)	Amend No.2	Appendix 3	Amend No.2
2.5.1(o)	Amend No.2	Appendix 4	Amend No.2
2.5.1(p)	Amend No.2	Table I A4-1~A4-5	Amend No.2
2.6.4(h)	Amend No.2		

Acronyms

AIS	Automatic Identification System
ANTS	Automatic Navigation and Track-keeping System
ARPA	Automatic Radar Plotting Aid
BC Code	Code of Safe Practice for Solid Bulk Cargoes
BNWAS	Bridge Navigational Watch Alarm System
CA	Controlled Atmosphere
CDI	Chemical Distribution Institute
COW	Crude Oil Washing
CPA	Closest Point of Approach
CPP	Controllable Pitch Propeller
CSC	International Convention for Safe Containers
CSR	Common Structural Rules
CTOD	Crack Tip Opening Displacement
ECDIS	Electronic Chart Display and Information System
EEBD	Emergency Escape Breathing Devices
ENC	Electronic Navigational Chart
ESP	Enhance Survey Plan
ETA	Emergency Towing Arrangement
FEU	Forty-foot Equivalent Unit
FMEA	Failure Mode & Effect Analysis
FRP, GRP	Fibreglass Reinforced Plastics
FTP Code	International Code for Application of Fire Test Procedures
GBS	Goal-Based ship construction Standards
GDC	General Dry Cargo
GLONASS	Global Navigation Satellite System
GMDSS	Global Maritime Distress and Safety System
GPS	Global Positioning System
HAZ	Heat Affected Zone
HHP anchor	High Holding Power anchor
HSC	High Speed Craft
HTS	High Tensile Steel
IACS	International Association of Classification Societies
IBC Code	International Code for the Construction and Equipment of Ships Carrying Dangerous Chemicals in Bulk

ICS	The International Chamber of Shipping
IEC	International Electrotechnical Commission
IGC Code	International Code for the Construction and Equipment of Ships Carrying Liquefied Gases in Bulk
ILO	International Labour Organization
IMDG Code	International Maritime Dangerous Goods Code
IMO	International Maritime Organization
ISO	International Standards Organization
LAN	Local Area Network
LCS	Loading Computer System
LEL	Lower Explosive Limit
LRIT	Long-range Identification and Tracking of ships
MARPOL	International Convention for the Prevention of Pollution from Ships
MARVS	Maximum Allowable Relief Valve Setting
MEPC	Marine Environment Protection Committee
MSC	Maritime Safety Committee
NDT	Nondestructive Testing
OCIMF	The Oil Companies International Marine Forum
OOW	Officer Of the Watch
PA	Public Address
PMA	Permanent Means of Access
PMS	Planned Machinery Maintenance Scheme
RH	Relative Humidity
RIT	Remote Inspection Techniques
PSPC	Performance Standard for Protective Coating
SENC	System Electronic Navigational Chart
SHHP anchor	Super High Holding Power anchor
SOLAS	International Convention for the Safety of Life at Sea
SRE	Ship Recycling
STCW	International Convention on Standards of Training, Certification and Watch-keeping for Seafarers
STS operation	Ship-To-Ship operation
S-VDR	Simplified Voyage Data Recorder
TCPA	Time to CPA
TEU	Twenty-foot Equivalent Unit
THD	Total Harmonic Distortion

TMCP	Thermo-Mechanical Controlled Processing
UPS	Uninterruptible Power Supply
VDR	Voyage Data Recorder
VEC	Vapor Emission Control

RULES FOR THE CONSTRUCTION AND CLASSIFICATION OF STEEL SHIPS

PART I
CLASSIFICATION AND SURVEY

CONTENTS

Chapter 1 Classification of Steel Ship 1

1.1 General 1
1.2 Application 2
1.3 Classification Characters 3
1.4 Class Notations 4
1.5 Application for Classification and Surveys 6
1.6 Surveys of Steel Ships 6
1.7 Approval 19
1.8 Certificates of Classification 19
1.9 Notice of Surveys 20
1.10 Suspension and Withdrawal of Class 20
1.11 Reclassification 21
1.12 Survey Fees and Expenses 21
1.13 International Conventions and Codes 21
1.14 Governmental Regulations 22
1.15 Sea Trials 22
1.16 Stability Experiment 23
1.17 Liability and Compensation 23

Chapter 2 Survey Requirements of Steel Ship 37

2.1 General 37
2.2 Bottom Surveys 51
2.3 Surveys of Propeller Shafts and Tube Shafts 54
2.4 Boiler Survey and Thermal Oil Heater Surveys 67
2.5 Annual Surveys 68
2.6 Intermediate Surveys 72
2.7 Special Surveys 73
2.8 Classification Survey of Ships not Built under Survey 79
2.9 Hull Surveys of General Dry Cargo Ships 81
2.10 Hull Surveys of Liquefied Gas Carriers 87
2.11 Hull Surveys of Oil Tankers 92
2.12 Hull Surveys of Bulk Carriers 95
2.13 Hull Surveys of Chemical Tankers 103
2.14 Hull Surveys of Double Hull Oil Tankers 108
2.15 Hull Surveys of Double Skin Bulk Carriers 113
2.16 Hull Surveys of Craft for FRP and Aluminum Alloys Construction 119
2.17 Surveys of Passenger Ships 120
2.18 Survey of Barges 121
2.19 Hull and Special Equipment Survey of Mobile Offshore Unit 122

Chapter 3 Survey Requirements for Additional Systems and Services 168

3.1 General 168
3.2 Surveys of Refrigerated Cargo Installations 168
3.3 Surveys of Inert Gas Systems 170
3.4 Survey for Dynamic Positioning System (DP-system) 172

Appendix 1 Loading Computer System (LCS) for Stability and Longitudinal Strength 177

A1.1 General Requirements 177
A1.2 Approval and Testing Requirements 179

Appendix 2 Guidance for Inclining Test 181

A2.1 General 181
A2.2 Preparation for the Test 181
A2.3 Inclining Test and Record of Data 183
A2.4 Postponement of the Test 184
A2.5 Inclining Test Report 184

Appendix 3 Load-Line Markings 185

Appendix 4 Additional Information on Hull Thickness Measurement 187

A4.1 Thickness Measurements Acceptance Criteria 187

Chapter 1

Classification of Steel Ship

1.1 General

1.1.1 Steel ship built and surveyed in accordance with the Rules for the Construction and Classification of Steel Ships (hereinafter referred to as the Rules) published by the CR Classification Society (hereinafter referred to as the Society) or alternatives found to represent an overall safety standard equivalent to that of the Rules (See 1.1.6 of this Part) will be assigned a class in the Register of Ships (hereinafter referred to as the Register) and will continue to be classed so long as they are found, upon examination at the prescribed surveys, to be maintained in a fit and efficient condition and in accordance with the requirements of the Rules.

1.1.2 Classification will be conditional upon compliance with the Rules in respect of both hull and machinery (i.e., main and auxiliary engines, boilers, essential appliances, pumping arrangements and electrical equipment). The products including the equipment, components, systems and materials intended for classed ships or ships to be classed are to comply with the requirements in "Guidelines for Survey of Products for Marine Use".

1.1.3 The Rules are framed on the understanding that ships will be properly loaded and handled; they do not, unless stated in the class notation, provide for special distributions or concentrations of loading. The Society may also require additional strengthening to be fitted in any ship which, in their opinion, may be subjected to severe stresses due to particular features in her design, or when it is desired to make provisions for exceptionally loaded or ballasted conditions. In these cases particulars are to be submitted for consideration.

1.1.4 The stability of the ship is to be sufficient and in compliance with the requirements of governmental authority, International Conventions and Codes and Chapter 30 and 30A of Part II of the Rules, as applicable.

1.1.5 The Rules do not cover certain technical characteristics, such as trim, hull vibration, etc., but the Society is willing to advise on such matters although it cannot assume responsibility for them.

1.1.6 Alternatives are to be accepted, provided that they are considered by the Society to be equivalent to the Rules.

1.1.7 Ships the construction of which involves novel features of design in respect of hull, machinery or equipment and to which the provisions of the Rules are not directly applicable may be classed, when approved by the Society on the basis that the Rules insofar as applicable have been complied with and that special consideration based on the best information available at the time has been given to the novel features. The Rules are framed on the understanding that ships are not to be operated in environmental conditions more than those agreed for the design basis and approval, without the prior agreement of the Society.

1.1.8 Register

Steel ships with their class approved by the Society are to be recorded in the Register. The Register is to be published on the CR website and is to contain the names of ships and other useful items of information such as flag, port of registry, gross tonnage, class notations, owners, shipbuilders, dimensions, machinery particulars, the date of build, etc.

1.1.9 Date of build

(a) The date of build is normally to be the date of completion of the classification initial survey during construction of ships built under the inspection.

(b) If the period between launching and completion or putting a ship to use is unduly made longer than usual, the date of launching may be additionally indicated in the Register.

(c) If a ship is not immediately put into service after completion, but is laid up for a period, the ship is to be drydocked for examination by the Surveyor of the Society (hereinafter referred to as the Surveyor) before proceeding to sea, and the subsequent Special Survey is based on the date of such an examination provided that the result of such survey is satisfactory in all respects.

1.1.10 Loading conditions and any other preparations required to permit a ship with a notation specifying some service limitation to undertake a sea-going voyage, either from port of loading to service area or from one service area to another, are to be in accordance with arrangement agreed by the Society prior to the voyage.

1.1.11 Damage, repairs and alterations

Any damage, defect, breakdown or grounding, which could invalidate the conditions for which a class has been assigned, is to be reported to the Society without delay.

1.1.12 For ships, the arrangements and equipment of which are required to comply with the requirements of the International Convention Regulations and applicable Protocols and Amendments relating thereto, such compliance is to be demonstrated by possession of applicable Convention Certificates issued by the Government of the State whose flag the ship is flying (hereinafter refer to as the Administration) or by any organization authorized by the Administration.

1.1.13 Where an on-board computer system having either a longitudinal strength or a stability computation capability or both, is provided on new ships, or newly installed on existing ships, then the system is to be certified for such use in accordance with the Society's procedure for approval of on-board computer systems for stability calculation (Refer to Appendix 1).

1.1.14 When longitudinal strength calculations have been required, loading guidance information is supplied to the Master by means of a Loading Manual and in addition, when required, by means of loading instrument.

1.1.15 For all ships, new installation of materials which contain asbestos is to be prohibited.

1.1.16 Ships of length less than 24 meters may be designed and constructed in accordance with other recognized standards, e.g. ISO standards provided the agreement is issued by the Society.

1.1.17 In general, while references are made to IACS URs (Unified Requirements), the latest version of the documents are to be used.

1.2 Application

The Society has the right to adopt, and publish as deemed necessary, Rules relating to classification and has (in relation thereto) provided the following:

1.2.1 Except in the case of a special directive by the Society, no new Regulation or alteration to any existing Regulation relating to classification character or to class notation is to be applied to existing ships.

1.2.2 Except in the case of a special directive by the Society, or where changes necessitated by mandatory implementation of International Conventions and Codes are concerned, no new Rule or alteration in any existing Rule is to be applied compulsorily after the date on which the contract between the ship builder and shipowner for construction of the ship has been signed, nor within 6 months of its adoption, nor after the approval of the original midship section or equivalent structural plans. The date of "contract for construction" of a ship is the date on which the contract to build the ship is signed between the prospective shipowner and the ship builder. This date and the construction number (i.e. hull numbers) of all the vessels included in the contract are to be declared by the party applying for the assignment of class to a newbuilding. The date of "contract for construction" of a series of sister ships, including specified optional ships for which the option is ultimately exercised, is the date on which the contract to build the series is signed between the prospective shipowner and the ship builder. In this section a "series of sister ships" is a series of ships built to the same approved plans for classification purposes, under a single contract for construction. The optional ships will be considered part of the same series of sister ships if the option is exercised not later than 1 year after the contract to build the series was signed. If a contract for construction is later amended to include additional ships or additional options, the date of "contract for construction" for such ships is the date on which the amendment to the contract is signed between the prospective shipowner and the ship builder. The amendment to the contract is to be considered as a "new contract". If a contract for construction is amended to change the ship type, the date of "contract for construction" of this modified vessel, or vessels, is the date on which the revised contract or new contract is signed between the Owner, or Owners, and the shipbuilder. Where it is desired to use existing approved ship or machinery plans for a new contract, written application is to be made to the Society. Sister ships may have minor design alterations provided that such alterations do not affect matters related to classification, or if the alterations are subject to classification requirements,

these alterations are to comply with the classification requirements in effect on the date on which the alterations are contracted between the prospective owner and the ship builder or, in the absence of the alteration contract, comply with the classification requirements in effect on the date on which the alterations are submitted to the Society for approval. Recognising the long time period that may occur between the initial design contract and the contract for construction for offshore units for fixed locations, the date determining effective classification requirements will be specially considered by the Society in such cases.

1.2.3 Information contained in the reports of classification and statutory surveys will be made available to the relevant owner, National Administration, Port State Administration and, if authorised in writing by that owner, to any other person or organisation.

1.2.4 Information relating to the status of classification and statutory surveys and suspensions/withdrawals of class together with any associated conditions of class will be made available as required by applicable legislation or court order.

1.2.5 The Rules may be used in High Speed Crafts, Aluminum Vessels and FRP ships, if applicable.

1.3 Classification Characters

1.3.1 All ships, when classed, will be assigned following classification characters as applicable.

1.3.2 Classification symbols

(a) **CR100** —This class is to be assigned to the ship's hull which in all their parts complies with the Rules for the draught required.

(b) **CMS** —This class is to be assigned to the machinery including propelling and essential auxiliary machinery and all other equipment covered by the classification which complies with the Rules.

(c) **RMS** —This class is to be assigned to the refrigerating machinery including hold insulation and working condition which complies with the Rules.

(d) The symbol **CMS** and/or **RMS** will be added concurrently to a ship assigned with **CR100**.

1.3.3 Surveying symbols

(a) ✠ This symbol when affixed to classification symbols means the plans of ship have been approved by the Society in accordance with the Rules, and ship has been built to the satisfaction of the Surveyor to the Society.

(b) ✠ This symbol is to be assigned to the ship has not been built under the survey of the Society but has been constructed under the survey of a recognized society. In addition, the whole of hull and machinery will be required to have been installed and tested to the satisfaction of the Surveyor to the Society in accordance with the Rules of the Society.

(c) No surveying symbol are to be assigned to the hull and machinery of any ship not having been surveyed during construction by either the Society or any other recognized party but the existing installation and arrangement has been examined and tested and found to be acceptable to the Society.

1.3.4 Equipment symbols

The letter **E** which is affixed to surveying symbols of hull means the equipment including anchors, chain cables and hawsers of new or existing ships is supplied and maintained in accordance with the full requirements of the Rules, or partial requirements under special approval. In the case of a ship classed for a special or restricted service, if approved by the Society that requirements of the Rules are not necessary to apply, no equipment symbol is to be affixed.

1.3.5 Automation symbols

A symbols, which is to be round-bracketed and be affixed next to the classification symbol **CMS**, indicating that an automatic or remote control and monitoring system for propulsion machinery, propulsion machinery spaces, etc. is provided and relevant requirements of the Rules are complied with. See Table I 1-1.

1.3.6 Positioning Mooring symbols

(a) Position Mooring Equipment

When requested by the Owner, the symbol **POME** may be placed after the classification symbol, thus: **CR 100 ✠ POME** which will signify that the mooring equipment, anchors, chain or wire rope which have been specified by the Owner for position mooring have been tested in accordance with the specifications of the Owner and in the presence of a Surveyor.

Fabrication tests of the position mooring equipment, such as anchors, chains, wires, shackles, etc. are to at least satisfy the requirements of Part XI and Part XII of the Rules for the respective sizes of equipment.

(b) Position Mooring Systems

When requested by the Owner, the Society is prepared to certify the position mooring capability of the unit. A unit so certified for position mooring will be designated by the symbol **POMS** placed after the classification symbol, thus: **CR 100 ✠ POMS**.

1.4 Class Notations

1.4.1 General

(a) When considered necessary by the Committee, or when requested by an Owner and agreed by the Committee, a class notation will be appended to classification character assigned to the ship. This class notation will consist of one of, or a combination of, the notations listed in 1.4.2 to 1.4.5. The classification characters and class notations assigned to a ship are indicated on the Certificate of Classification as well as in the Register of Ships published by the Society.

(b) The notations for type of ship, service restriction, feature, cargo, equipment, additional survey, etc. are added after the classification symbol **CR100**. The automation symbol and notations for navigation safety system, special equipment of machinery, machinery survey, etc. are added after the classification symbol **CMS**.

(c) Where a class notation assigned to a specific ship together with classification characters is required by the Rules to which the ship is subject, such notation is a necessary one for this ship, otherwise an optional one.

(d) Where multiple class notations for type of vessel are assigned, such individual notations are to be separated by a slash "/", e.g.:

CR100 ✠ E Oil/Chemical Tanker

(e) Any suffix to a class notation is to be curly-bracketed and every two suffixes are to be separated by a semicolon ";", e.g.:

CR100 ✠ E Bulk Carrier, BC-A{No MP; Holds 2, 4 and 6 may be empty}, ……

(f) Every two sets of class notations are to be separated by a comma ",", e.g.:

CR100 ✠ E Oil Tanker, CSR, ESP, ……

CMS(CAU)✠ PCM, NAV……

Unless specially stated otherwise, class notations are generally given in the following sequence.

1.4.2 Hull structural material notation

A notation indicating that the ship uses materials other than steel as the structural materials for the main hull, e.g. **FRP Hull, Aluminum Alloy Hull** etc.

1.4.3 Ship type notation, special duty or purpose notation, additional service notation and hull construction notation

(a) Ship type notation

A notation indicating that the ship has been arranged and constructed in compliance with particular usage intended to apply to that type of ship. See Table I 1-2 of this Chapter.

(b) Special duties or purpose notation

(i) A notation indicating that the ship has been designed, modified or arranged for special duties other than those implied by the type and cargo notation, e.g. **Research Vessel**. Ships with special duties notations are not thereby prevented from performing any other duties for which they may be suitable.

(ii) A notation indicating that the ship has been designed, modified or arranged for special services other than those implied by the type and cargo notation, e.g. **Special Government Services**, **Patrol Vessel**, **Patrol Boat** etc. Ships with special purpose notations are not thereby prevented from performing any other duties for which they may be suitable.

(c) Additional service notation

A type notation and/or a special duty or purpose notation may be completed by one or more additional service notations. The specific rule requirements applicable to each service notation are to be complied with. See Table I 1-3 of this Chapter.

(d) Hull construction notation

For ships with hull construction other than monohull, such as catamaran, trimaran, small waterplane area twin hull (SWATH) and etc., the hull construction of ship is in compliance with relevant requirements of the Rules or the requirements agreed by the Society, the hull construction notation of **Catamaran**, **Trimaran**, or **SWATH** will be affixed after the ship type notation.

1.4.4 Service restriction notation

A notation indicating that the ship has been classed on the understanding that it will be operated only in suitable areas or conditions which have been agreed by the Committee. See Table I 1-4.

1.4.5 Additional Class Notation

A notation expressing the classification of equipment or specific arrangement, which has been requested by the Owner.

(a) Special features notation.

A notation indicating that the ship incorporates special features which significantly affect the design, e.g. **Movable Decks**.

(b) Cargo notation

A notation indicating that the ship has been designed, modified or arranged to carry one or more particular cargoes, e.g. **Sulphuric Acid**. Ships with one or more cargo notation are not thereby prevented from carrying other cargoes for which they are suitable.

(c) Additional survey notation.

A notation indicating that one or more Special Surveys are adopted and relevant requirements of the Rules are complied with. See Table I 1-5.

(d) Special equipment notation.

A notation indicating that one or more special equipments are provided and relevant requirements of the Rules are complied with. See Table I 1-6.

(e) Ice notation.

A notation indicating that the ship has been strengthened for navigation in ice in accordance with relevant requirements of the Rules. See Table I 1-7.

(f) Navigation safety notation.

A notation indicating that a navigational safety system is provided and relevant requirements of the Rules are complied with. See Table I 1-8.

(g) Refrigerated cargo installation notation.

A notation indicating that a refrigerated cargo installation is provided and relevant requirements of the Rules are complied with. See Table I 1-9.

(h) Environmental protection notation.

A notation indicating that one or more environmental protection features are adopted and relevant requirements of the Rules are complied with. See Table I 1-10.

1.5 Application for Classification and Surveys

1.5.1 An application for the classification of ships is to be submitted in writing or by e-mail or fax by the builder for a ship to be built under the Society's survey or by the owner for a ship not built under the Society's survey.

1.5.2 An application for surveys for maintenance of class is to be submitted in writing or by e-mail or fax by the owner or owner's representative.

1.6 Surveys of Steel Ships

1.6.1 General

(a) All ships classed with the Society are subjected to the following periodical surveys:

(i) Annual Surveys.

(ii) Bottom Surveys.

(iii) Intermediate Surveys.

(iv) Special Surveys.

(v) Boiler Surveys and Thermal Oil Heater Surveys.

(vi) Propeller Shaft and Tube Shaft Surveys.

(b) The contents of surveys by the Society are detailed in the "Survey Requirements of Steel Ships" in Chapter 2 of this Part.

(c) Special consideration may be given to any unusual circumstances justifying a modification of either survey requirements or the interval of surveys. This Society may make special requirements including intervals of periodical surveys to coincide with the regulations of the flag state of ships if owner requests.

(d) Statutory survey will be acted by this Society, when authorized on behalf of Governments, in respect of National and International statutory safety and other requirements for passenger and cargo ships.

(e) Survey planning meeting(Kick-off meeting) is to be held prior to the commencement of the Intermediate Survey and Special Survey.

1.6.2 Classification initial survey during construction

(a) New ships are to be built in accordance with the Rules. The constructional plans and particulars of the hull, equipment and machinery, together with their drawing list, are to be submitted for approval of the Society before the work is commenced. In case these plans need to be modified or altered, a re-approval is indispensable.

(b) The new machinery including boilers, pressure vessels and electrical equipment for ships classed or intended to be classed is to be manufactured under and surveyed according to the Rules.

(c) From the commencement of the work until the completion of the ship and final test of the machinery under working condition, the Surveyors are to be satisfied that the materials, workmanship and arrangements are satisfactory and in accordance with the Rules or the approved plans, or any material, workmanship or arrangement found to be unsatisfactory, it is to be rectified.

(d) The materials used in the construction of hulls and machinery intended for classification are to be of good quality and free defects and are to be tested in accordance with the requirements of Part XI. The steel is to be manufactured by an approved process at works recognized by the Society. Alternatively, tests to the satisfaction of the Society will be required to demonstrate the suitability of the steel.

(e) Copies of finish plans (showing the ship as built), essential Certificates and records, required loading and other instruction manuals are to be readily available for use when required by the Surveyor, and may be required to be kept on board.

(f) Hull Survey for New Construction

(i) Qualification and Monitoring of Personnel

Exclusive surveyors of this Society are to confirm through patrol, review and witness that the ships are built using approved plans in accordance with the relevant rules and statutory requirements. The surveyors are to be qualified to be able to carry out the tasks and procedures are to be in place to ensure that their activities are monitored through the QM of this Society.

(ii) Survey of the hull structure

IACS UR Z23 Table 1 provides a list of surveyable items for the hull structure and coating and is applicable to this Society including:

(1) Description of the shipbuilding functions;

(2) Classification and statutory survey requirements;

(3) Survey method required for classification;

(4) Relevant IACS and statutory requirement references;

(5) Documentation to be available for the Surveyor during construction.

a) The shipbuilder is to provide the Surveyors access to documentation required by classification, this includes documentation retained by the shipbuilder or other third parties.

b) The list of documents approved or reviewed by the Society for the specific new construction are as follows:

- plans and supporting documents
- examination and testing plans
- NDE plans
- welding consumable details
- welding procedure specifications
- welding plan or details
- welder's qualification records
- NDE operator's qualification records

(6) Documents to be inserted into the ship construction file.

(7) A list of specific activities which are relevant to the shipbuilding functions. This list is not exhaustive and can be modified to reflect the construction facilities or specific ship type.

(8) Evidence is also to be made available, as required, by the shipbuilder, to the surveyor whilst the construction process proceeds to prove that the material and equipment supplied to the ship has been built or manufactured under survey relevant to the classification rules and statutory requirements.

(iii) Newbuilding survey planning

Prior to commencement of surveys for any newbuilding project, a kick off meeting shall be carried out.

A record of the meeting is to be made. The records are to take note of specific published Administration requirements and interpretations of statutory requirements. The shipyard shall be requested to advise of any changes to the activities agreed at the kick off meeting and these are to be documented. Shipbuilding

quality standards for the hull structure during new construction are to be reviewed and agreed during the kick-off meeting. Structural fabrication is to be carried out in accordance with IACS Recommendation 47, "Shipbuilding and Repair Quality Standard", or a recognized fabrication standard which has been accepted by this Society prior to the commencement of fabrication/construction. The work is to be carried out in accordance with the Rules and under survey of this Society. In the event of series ship production consideration may be given to waiving the requirement for a kick off meeting for the second and subsequent ships.

(iv) Examination and test plan for newbuilding activities. The shipbuilder is to provide plans of the items which are intended to be examined and tested. These plans need not be submitted for approval and examination at the time of the kick off meeting, but the plans and any modifications to them are to be submitted to the surveyors in sufficient time to allow review before the relevant survey activity commences. They are to include:

(1) Proposals for the examination of completed steelwork - generally referred to as the block plan and are to include details of joining blocks together at the pre-erection and erection stages or at other relevant stages;

(2) Proposals for fit up examinations where necessary;

(3) Proposals for testing of the structure (leak and hydrostatic) as well as for all watertight and weathertight closing appliances;

(4) Proposals for non-destructive examination;

(5) Any other proposals specific to the ship type or to the statutory requirements.

(v) Ship Construction File

(1) The shipbuilder is to deliver documents for the Ship Construction File. In the event that items have been provided by another party such as the shipowner and where separate arrangements have been made for document delivery which excludes the shipbuilder, that party has the responsibility. The Ship Construction File shall be reviewed for content.

(2) Ship Construction File on board the ship, is to facilitate inspection (survey) and repair and maintenance, shall include in addition to documents listed in IACS Z23 Table 1, but not be limited to:

- As-built structural drawings including scantling details, material details, and, as applicable, wastage allowances, location of butts and seams, cross section details and locations of all partial and full penetration welds, areas identified for close attention and rudders (IACS Z7.1, Z7.2, Z10.1, Z10.2, Z10.3, Z10.4, Z10.5);
- Manuals required for classification and statutory requirements, e.g. loading and stability, bow doors and inner doors and side shell doors and stern doors – operations and maintenance manuals (IACS S8 and S9);
- Ship structure access manual, as applicable;
- Copies of certificates of forgings and castings welded into the hull (IACS W7 and W8);
- Details of equipment forming part of the watertight and weathertight integrity of the ship;
- Tank testing plan including details of the test requirements (IACS S14);
- Corrosion protection specifications (IACS Z8 and Z9);
- Details for the in-water survey, if applicable, information for divers, clearances measurements instructions etc., tank and compartment boundaries;
- Docking plan and details of all penetrations normally examined at drydocking;
- Coating Technical File, for ships subject to compliance with the IMO Performance Standard for Protective Coatings (PSPC) as a class requirement under the IACS Common Structural Rules.

(vi) Review of the construction facility

The Society is to familiarize themselves with the yard's production facilities, management processes, and safety for consideration in complying with the requirements of Table 1 of IACS UR Z23 prior to any steelwork or construction taking place in the following circumstances:

(1) where the Society has none or no recent experience of the construction facilities – typically after a one year lapse - or when significant new infrastructure has been added;

(2) where there has been a significant management or personnel re-structuring having an impact on the ship construction process;

(3) or where the shipbuilder contracts to construct a vessel of a different type or substantially different in design.

1.6.3 Classification survey of ships not built under survey

Ships which have not been built under survey to the Society, but which are submitted for classification, are to be subjected to a classification survey of ships not built under survey (See 2.8 of this Part). Survey planning meeting (kick-off meeting) is to be held prior to the commencement of the survey.

1.6.4 Special Survey

(a) Survey intervals

The Special Survey is to be subjected to surveys at the fixed intervals not exceeding 5 years. Special Surveys are normally to be effected in the sequences of:

No.1 - for ships up to 5 years old.

No.2 - for ships between 5-10 years old.

No.3 - for ships between 10-15 years old.

No.4 & subsequent - for ships age > 15 years old.

(b) Commencement of Special Survey

(i) The Special Survey may be commenced at the 4th Annual Survey and be progressed with a view to completion by the 5th anniversary date.

(ii) As part of the preparation for the Special Survey, the thickness measurement held and survey programme (see 2.1.6(a) of this Part) are to be dealt with in advance of the Special Survey. However, the thickness measurement held before the 4th Annual Survey cannot be credited as a part of Special Survey.

(c) Premature of Special Survey

(i) If a Special Survey is completed prematurely but within 3 months prior to the due date, the due date of the next Special Survey is based upon a date not exceeding 5 years from the due date of the existing Special Survey. If a Special Survey is completed more than 3 months prior to the due date, the due date of the next Special Survey is based upon a date not exceeding 5 years from the date of completing of the Special Survey.

(ii) Where a Special Survey is commenced more than 15 months prior to the due date, the entire survey is normally to be completed within 15 months, if such work is to be credited to the Special Survey. Survey is based upon a date not exceeding 5 years from the date of completion of the Special Survey.

(d) Extension of Special Surveys

(i) If a ship at the time when the Special Survey is due but not in a port in which it is to be surveyed, the Society may upon the Owner's written request in advance in each case extend a period not exceeding 3 months. Such extension is, however, only to be granted for allowing the ship to complete its voyage to the port in which it is to be surveyed, and only in cases where it is considered proper and reasonable to do so.

(ii) If a Special Survey is completed after the due date, the due date of the next Special Survey is based upon a date not exceeding 5 years from the due date of the existing Special Survey.

(iii) A maximum 3 months extension of Special Survey beyond the due date may be granted provided an occasional survey has been carried out satisfactorily based on a scope of Annual Survey and the additional items considered by the Society.

(e) If a Special Survey has been completed and a new final certificate can't be issued or placed on board the ship before the expiry date of the existing certificate, the attending Surveyor authorized by the Society may endorse the existing certificate and such a certificate is to be accepted as valid for a further period which is not to exceed 6 months from the expiry date.

(f) Continuous survey

(i) At the request of the owner, and upon approval of the proposed arrangement, a system of continuous surveys for hull, machinery and cargo refrigerating machinery appliances, may be undertaken, except for hull surveys of tankers, bulk carriers and similar types of ships, where-by the Special Survey requirements are carried out in regular cycle to complete all the requirements of the particular Special Survey within a 5-year period. If the continuous survey is completed beyond the 5-year period, the completion date is to be recorded to agree with the original due date of the cycle. If the continuous survey is completed prematurely but within 3 months prior to the due date, the Special Survey is to be credited to agree with the effective due date. The continuous survey can, also be adopted respectively for the hull, the machinery including the electrical equipment and the refrigerated cargo installations.

(ii) Where some items of the machinery are opened up and examined by the recognized chief engineer as normal routine for maintenance at ports where the Surveyor is not available or at sea, the open-up inspection of the items, at the request of Owner, under certain conditions, may be dispensed with at the discretion of the Surveyor subject to a confirmatory survey at the convenient port of call where the Surveyor is available. The confirmatory survey is to be carried out within 5 months from the date of the item of the machinery which was opened up and inspected by the recognized chief engineer. If deemed necessary by the Surveyor, the individual item may be inspected again.

(iii) All items stipulated in 2.7.1 except thickness measurement are covered by a system of continuous survey for hull. The thickness measurement for the ship which adopts a system of continuous survey for hull conducted before the 4th Annual Survey cannot be credited for the Special Survey.

(g) Planned Maintenance Scheme(PMS) for machinery

(i) Application

(1) These requirements apply to an approved Planned Maintenance Scheme for Machinery (PMS) as an alternative to the Machinery Continuous Survey (MCS). (see 1.6.4(f) above)

(2) It considers surveys to be carried out on the basis of intervals between overhauls recommended by manufacturers, documented operator's experience and a condition monitoring system, where fitted.

(3) This scheme is limited to components and systems covered by MCS.

(4) Any items not covered by PMS shall be surveyed and credited in the usual way.

(ii) Maintenance intervals

In general, the intervals for PMS shall not exceed those specified for MCS. However, for components where the maintenance is based on running hours, longer intervals may be accepted as long as the intervals are based on the manufacturer's recommendations.

(iii) Onboard responsibility

(1) The chief engineer shall be the responsible person on board in charge of the PMS.

(2) Documentation on overhauls of items covered by the PMS shall be reported and signed by the chief engineer.

(3) Access to computerized systems for updating of the maintenance documentation and maintenance program shall only be permitted by the chief engineer or other authorized person.

(iv) Procedures and conditions for approval of a PMS

(1) System Requirements

a) The PMS shall be programmed and maintained by a computerized system. However, this may not be applied to the current already approved schemes.

b) The system shall be approved in accordance with a procedure of the Society.

c) Computerized systems shall include back-up devices, such as disks, tapes, or CDs, which are to be updated at regular intervals.

(2) Documentation and information

The following documentation shall be submitted for the approval of the scheme:

a) organization chart identifying areas of responsibility.

b) documentation filling procedures.

c) listing of equipment to be considered by classification in PMS.

d) machinery identification procedure.

e) preventive maintenance sheet(s) for each machine to be considered.

f) listing and schedule of preventive maintenance procedures.

(3) In addition to the above documentation the following information shall be available on board:

a) all clauses in 1.6.4(g)(iv)(2) above, in an up-to-date fashion.

b) maintenance instructions (manufacturer's and shipyard's).

c) reference documentation (trend investigation procedures etc.).

d) records of maintenance including repairs and renewals carried out.

(v) Approval validity

(1) When the PMS is approved, the notation **PMS** will be assigned to the ship.

(2) An implementation survey shall be carried out to confirm the validity of the notation **PMS** (see 1.6.4(g)(vi)).

(3) An annual report covering the year's service, including the information as required under the clauses 1.6.4(g)(iv)(2)c) and e) as well as the information on changes to other clauses in 1.6.4(g)(iv)(2), shall be reviewed by the Society.

(4) An Annual Audit shall be carried out to maintain the validity of the PMS (see 1.6.4(g)(vii))

(5) The survey arrangement for machinery under PMS can be cancelled by the Society if PMS is not being satisfactorily carried out either from the maintenance records or the general condition of the machinery, or when the agreed intervals between overhauls are exceeded.

(6) The case of sale or change of management of the ship or transfer of class shall cause the approval to be reconsidered.

(7) The ship owner may, at any time, cancel the survey arrangement for machinery under PMS by informing the Society in writing or by e-mail or fax and for this case the items which have been inspected under the PMS since the last Annual Survey can be credited for class at the discretion of the attending Surveyor.

(vi) Implementation Survey

(1) The Implementation Survey shall be carried out by the Surveyor within one year from the date of approval of the PMS.

(2) During the Implementation Survey the following shall be verified by the Surveyor to ensure:

a) the PMS is implemented according to the approval documentation and is adapted to the type and complexity of the components/system on board.

b) the PMS is producing the documentation required for the Annual Audit and the requirements of surveys and testing for retention of class are complied with.

c) the onboard personnel is familiar with the PMS.

(3) When this survey is carried out and the implementation is found in order, a report describing the PMS shall be submitted to the Society and the approved PMS may replace the MCS.

(vii) Annual Audit*

(1) An Annual Audit of the PMS shall be carried out by the Surveyor and preferably concurrently with the Annual Survey of machinery.

(2) The Surveyor shall review the annual report or verify that it has been reviewed by the Society.

(3) The purpose of this survey shall be to verify that the scheme is being correctly operated and that the machinery has been functioning satisfactorily since the previous survey. A general examination of the items concerned shall be carried out.

(4) The performance and maintenance records shall be examined to verify that the machinery has functioned satisfactorily since the previous survey or action has been taken in response to machinery operating parameters exceeding acceptable tolerances and the overhaul intervals have been maintained.

(5) Written details of break-down or malfunction shall be made available.

(6) Description of repairs carried out shall be examined. Any machinery part, which has been replaced by a spare one, due to damage, is to be retained on board, where possible, until examined by the Surveyor.

(7) Upon satisfactory completion of the above requirements, the Society shall retain the PMS.

Note: * The term audit, in this context, is not related to ISM audit.

(viii) Damage and repairs

(1) The damage of components/machinery shall be reported to the Society. The repairs of such damaged components/machinery shall be carried out to the satisfaction of the Surveyor.

(2) Any repair and corrective action regarding machinery under PMS system shall be recorded in the PMS logbook and repair verified by the Surveyor at the Annual Audit.

(3) In the case of overdue outstanding recommendations or a record of unrepaired damage which would affect the PMS the relevant items shall be kept out of the PMS until the recommendation is fulfilled or the repair is carried out.

(ix) Planned Maintenance (PM)

Owners may conduct Planned Maintenance on any item(s) of equipment. However, the following equipment cannot be enrolled into the PMS and credit will not be given towards periodic surveys.

(1) System piping (All)

(2) Valves (All)

(3) Sea chests

(4) All operational tests

(5) Fire pumps

(6) Fire fighting equipment

(7) All safety devices, trips and relief valves

(8) Air receivers with associated relief valves and safety devices

(9) Heat exchangers and unfired pressure vessels with design pressures over 6.9 bar (7 kgf/cm^2) and associated relief valves

(10) Steering gear piping, pumps and control/relief valves

(11) Steam turbines

(x) Open-up survey

The following machinery is, in principle, to be opened and examined in attendance of the Surveyor in accordance with the survey schedule table.

(1) Crankpins and bearings, crank-journals and bearings, and crosshead bearings for main diesel engines.

(2) Rotors, blades, casings, main bearings, couplings between turbine and reduction gear, nozzle valves and maneuvering valves for main steam turbine.

(3) Aux. steam turbine for main generator.

(4) Thrust shaft and bearings for main propulsion.

(5) Reduction gear for main propulsion.

(6) Flexible coupling for main propulsion.

(7) Other items deemed necessary by the Society.

(xi) For engine with bore 300 mm or under of the non-ocean going vessels, special consideration may be given to modify the above PMS requirements based on the manufacturer's recommendation of maintenance manual.

(h) Condition Monitoring and Condition Based Maintenance Schemes

(i) Application

(1) These requirements apply to the approved Condition Monitoring and Condition Based Maintenance schemes where the condition monitoring results are used to influence the scope and/or frequency of Class survey.

(2) This scheme may be applied to components and systems covered by Machinery Continuous Survey (**MCS**), and other components and systems as requested by the owner. The extent of Condition Based Maintenance and associated monitoring equipment to be included in the maintenance scheme is decided by the Owner.

(3) These requirements can be applied only to ships operating on approved PMS survey scheme.

(4) The scheme may be applied to any individual items and systems. Any items not covered by the scheme shall be surveyed and credited in accordance with the requirements of 2.7.2 and/or 1.6.4(g) of this Part.

(5) When the **CM** or **CBM** is approved, the notation **CM** or **CBM** will be assigned to the ship.

(ii) Definitions

The following standard terms are defined in ISO 13372:2012:

(1) Condition monitoring: acquisition and processing of information and data that indicate the state of a machine over time. The machine state deteriorates if faults or failures occur.

(2) Diagnostic: examination of symptoms and syndromes to determine the nature of faults or failures.

(3) Condition Based Maintenance: maintenance performed as governed by condition monitoring programmes.

(iii) Condition Monitoring (CM)

(1) Where an approved condition monitoring system is fitted, credit for survey may be based on acceptable condition monitoring results. The condition monitoring results are to be reviewed during the Annual Audit.

(2) Limiting parameters are to be based on the Original Equipment Manufacturers guidelines (OEM), or a recognized international standard.

(3) The condition monitoring system is to provide an equivalent or greater degree of confidence in the condition of the machinery to traditional survey techniques.

(4) The condition monitoring system shall be approved in accordance with the Society's procedures.

(5) A condition monitoring system may be used to provide a greater understanding of equipment condition, and a condition based maintenance scheme may be used to obtain maintenance efficiency. Class approval is required where owners wish to change the survey cycle based on CM/CBM.

(6) Software systems can use complex algorithms, machine learning and knowledge of global equipment populations/defect data in order to identify acceptability for continued service or the requirement for maintenance. These systems may be independent of the OEM recommended maintenance and condition monitoring suggested limits. Approval of this type of software is to be based on OEM recommendations, industry standards and experience of the Society.

(7) The Society retains the right to test or open-up the machinery, irrespective of the CM results, if deemed necessary.

(iv) Condition Based Maintenance (CBM)

(1) Where an owner wishes to base their equipment maintenance on a CBM approach, this is to meet the requirements of the ISM Code.

(2) Where an agreed planned maintenance and CBM scheme is in operation, the MCS and other survey intervals may be extended based on OEM maintenance recommendations and acceptable condition monitoring results.

(3) Limiting parameters (alarms and warnings) are to be based on the OEM guidelines, or a recognized international standard.

(4) The CBM scheme is to provide an equivalent or greater degree of confidence in the condition of the machinery to traditional maintenance techniques.

(5) The scheme shall be approved in accordance with the Society's procedures.

(6) Software systems can use complex algorithms, machine learning and knowledge of global equipment populations/defect data in order to identify acceptability for continued service or the requirement for maintenance. These systems may be independent of the OEM recommended

maintenance and condition monitoring suggested limits. Approval of this type of software is to be based on OEM recommendations, industry standards and experience of the Society.

(v) Procedures and Conditions for approval of CM and CBM

(1) Onboard Responsibility

a) The chief engineer shall be the responsible person on board in charge of the CM and CBM.

b) Documentation on the overhaul of items covered by CM and CBM schemes shall be reported by the chief engineer.

c) Access to computerized systems for updating of the maintenance documentation and maintenance program shall only be permitted by the chief engineer or other authorized person.

d) All personnel involved in CM and CBM shall be appropriately qualified.

Note: CM does not replace routine surveillance or the chief engineer's responsibility for taking decisions in accordance with his judgement.

(2) Equipment and System Requirements

a) CM equipment and systems shall be approved in accordance with a procedure of the Society.

b) The CM/CBM scheme and its extent, are to be approved by the Society.

c) The CBM scheme is to be capable of producing a condition report, and maintenance recommendations.

d) A system is to be provided to identify where limiting parameters (alarms and warnings) are modified during the operation of the scheme.

e) Where CM and CBM schemes use remote monitoring and diagnosis (i.e. data is transferred from the ship and analysed remotely), the system is to meet the applicable standards for Cyber Safety and Security. The system shall be capable of continued onboard operation in the event of loss of the communication function.

f) CBM schemes are to identify defects and unexpected failures that were not prevented by the CM system.

g) Systems shall include a method of backing up data at regular intervals.

(3) Documentation and Information

a) The following documentation shall be made available to the Society for the approval of the scheme:

i) Procedure for changes to software system and CM parameters

ii) Listing of equipment to be included in the scheme

iii) Listing of acceptable condition monitoring parameters

iv) Description of CBM scheme

v) Listing, specifications and maintenance procedures for condition monitoring equipment

vi) Baseline data for equipment with condition monitoring

vii) Qualification of personnel and company responsible for analysing CM results

b) In addition to the above documentation the following information shall be available on board:

i) All clauses in 1.6.4(h)(v)(3)a) above in an up-to-date fashion

ii) Maintenance instructions (manufacturer's and shipyard's)

iii) Condition monitoring data including all data since last opening of the machine and the original base line data

iv) Reference documentation (trend investigation procedures etc.)

v) Records of maintenance including repairs and renewals carried out

vi) Records of changes to software systems and parameters

vii) Sensors calibration records / certification / status

(4) Approval validity

a) An Annual Audit shall be carried out to maintain the validity of the CM/CBM scheme.

b) The survey arrangement for machinery under CM/CBM can be cancelled by the Society if the scheme is not being satisfactorily carried out either from the maintenance records or the general condition of the machinery.

c) The case of sale or change of management of the ship or transfer of class shall cause the approval to be reconsidered.

d) The ship owner may, at any time, cancel the survey arrangement for machinery under the scheme by informing the Society in writing and for this case the items which have been inspected under the scheme since the last Annual Audit can be credited for class at the discretion of the attending Surveyor.

(vi) Surveys

(1) Installation Survey

a) Condition monitoring equipment is to be installed and surveyed in accordance with the Rules of the Society, and a set of base line readings is to be taken.

(2) Implementation Survey

a) The Implementation Survey shall be carried out by the Society's Surveyor no earlier than 6 months after installation survey and no later than the first Class Annual Survey.

b) During the Implementation Survey the following shall be verified by the Surveyor:

i) the CM/CBM scheme is implemented according to the approval documentation, including a comparison with baseline data;

ii) the scheme is producing the documentation required for the Annual Audit and the requirements of surveys and testing for the maintenance of class are complied with;

iii) the onboard personnel are familiar with operating the scheme.

iv) records of any limiting parameters (alarms and warnings) that have been modified during the operation of the scheme.

v) Records of any failures of monitored equipment are to be reviewed to ensure that the condition monitoring scheme is effective / sufficient.

c) When this survey is carried out and the implementation is found in order, a report describing the scheme shall be submitted to the Society and the scheme may be put into service.

(3) Annual Audit

a) An Annual Audit of the CM and CBM scheme shall be carried out by the Surveyor concurrently with the Class Annual Survey.

b) The purpose of this audit shall be to verify that the scheme is being correctly operated and that the machinery has been functioning satisfactorily since the previous audit. This is to include any limiting parameters (alarms and warnings) that have been modified since the last audit. A general examination of the items concerned shall be carried out.

c) The performance, condition monitoring and maintenance records shall be examined to verify that the machinery has functioned satisfactorily since the previous survey, or action has been taken in response to machinery operating parameters exceeding acceptable tolerances.

d) Written details of break-down or malfunction shall be made available.

e) At the discretion of the Surveyor, function tests, confirmatory surveys and random check readings, where Condition Monitoring / Condition Based Maintenance equipment is in use, shall be carried out as far as practicable and reasonable.

f) The familiarity of the chief engineer and other personnel involved with the CM system shall be verified.

g) Calibration status of sensors and equipment shall be verified.

h) Verification that the suitability of the CM/CBM scheme has been reviewed following defects and failures shall be carried out.

(4) Damage and repairs

a) Damage to components or items of machinery is to be reported to the Society. The repairs of such damaged components or items of machinery are to be carried out to the satisfaction of the Surveyor.

b) Details of repairs and maintenance carried out shall be examined. Any machinery part, which has been replaced by a spare one, due to damage, is to be retained on board where possible until examined by the Surveyor.

c) Defect and failure data is to be reviewed in order to ensure the system output is appropriate. Where necessary, following review of the failure data, there is to be a method of amending the CM and CBM scheme.

1.6.5 Annual Survey

(a) Annual Survey are to be carried out within 3 months before or after each anniversary date of the date of the initial classification survey or the completion of the last Special Survey.

(b) The anniversary date is to be changed if the Annual Survey is completed before the period specified in (a) of this subparagraph.

(i) The new anniversary date is to be amended by endorsement to a date which is not 3 months later than the date on which the survey was completed.

(ii) The subsequent Annual Survey is to be completed at the intervals prescribed as above using the new anniversary date.

(iii) The expiry date for a Special Survey may remain unchanged provided one or more Annual Surveys, as appropriate, are carried out so that the maximum intervals between the surveys prescribed are not exceed.

1.6.6 Intermediate Survey

(a) Intermediate Survey is to be carried out either at or between the 2nd and 3rd Annual Survey.

(b) Those items which are additional to the requirements of the Annual Survey may be surveyed either at or between the 2nd or 3rd Annual Survey.

1.6.7 Bottom Survey

(a) Survey intervals

(i) There is to be a minimum of 2 examinations of the outside of the ship's bottom and related items during each 5-year Special Survey period. One such examination is to be carried out in conjunction with the Special Survey. In all cases the interval between any 2 such examinations is not to exceed 36 months.

For ships operating solely in fresh water, the maximum interval is not to exceed 5 years.

(ii) An extension of examination of the ship's bottom up to 3 months beyond the due date may be granted in exceptional circumstances(1) provided an occasional survey has been carried out satisfactorily with the survey items 2.2.3(a) or 2.2.3(b) of this chapter required by the Society.

Note: (1) "Exceptional circumstances" means, e.g., unavailability of repair facilities, unavailability of essential materials, equipment or spare parts, or delays incurred by action taken to avoid severe weather conditions.

(b) In-Water Survey in lieu of Bottom Survey in dry dock

(i) An approved In-water survey equivalent to a docking survey may be considered as an alternative to a docking survey, subject to the provisions of 2.2.2 of this Part.

(ii) An In-water survey not credited as a Bottom Survey of the Special Survey may be carried out with the ship afloat.

(iii) Special consideration is to be given to ships of 15 years or over before being permitted to have such inspection.

(iv) For ESP ships of 15 years of age and over, such examinations are to be carried out with the ship in drydock.

(c) Bottom Survey at Special Survey

A Bottom Survey in dry dock is to be a part of the Special Survey.

(d) For passenger ships, the Bottom Surveys are to be carried out at each Annual Survey and Special Survey, at least 2 Bottom Surveys to be carried out in dry dock within each 5 years period of the classification Special Survey and the maximum interval between the 2 Bottom Survey in dry dock is not to exceed 36 months. The In-Water Surveys may be carried out and credited as the other Bottom Survey.

1.6.8 Surveys of propeller shafts and tube shafts

(a) Survey intervals

(i) Oil lubricated shafts or closed loop system fresh water lubricated shafts (closed system)

Normal survey interval is 5 years. Detailed requirements are in accordance with 2.3.2 of this Part.

(ii) Water lubricated shafts (open systems)

The survey interval of water lubricated shafts (open systems) is in accordance with 2.3.3 of this part.

(iii) Controllable pitch propellers for main propulsion purposes are to be surveyed at the same intervals as the propeller shaft.

(iv) Directional propellers for main propulsion purposes are to be surveyed at intervals not exceeding 5 years.

(v) Waterjet units for main propulsion purposes are to be surveyed at intervals not exceeding 5 years provided the impeller shafts are made of approved corrosion resistant material or have approved equivalent arrangements.

(vi) Dynamic positioning and/or thruster-assisted mooring and athwartship thrust propellers and shaftings are to be surveyed at intervals not exceeding 5 years.

(vii) All other shafts not covered above, their normal survey interval is 3 years.

(b) Survey extensions for propeller shaft and tube shaft

An extension with specified period may be granted by the Society, when requested by the Owner, provided the extension survey is carried out to the satisfaction of the Surveyor.

(i) For oil lubricated shafts, the survey extensions are in accordance with 2.3.2(c)(ii) of this Part.

(ii) For closed loop system fresh water lubricated shafts, the survey extensions are in accordance with 2.3.2(d)(ii) of this Parts.

(iii) For water lubricated shafts (open systems), the survey extensions are in accordance with 2.3.3(c)(ii) if this Part.

If the extension survey is carried out within 1 month of the shaft survey due date, then the extension will take effect from the Shaft Survey due date.

If the extension survey is carried out more than 1 month prior to the Shaft Survey due date, then the period of extension will take effect from the date on which the extension survey was completed.

1.6.9 Boiler Surveys and thermal oil heater surveys

(a) Survey intervals for boiler

(i) For ship fitted with more than one water tube boiler for propulsion, a minimum of 2 surveys is to be carried out during each 5-year Special Survey period. One such survey is to be carried out in conjunction with the Special Survey. In all cases, the interval between any 2 such surveys is not to exceed 36 months. An extension of the survey up to 3 months may be granted by the Surveyor in exceptional circumstances(1), provided a survey is carried out in accordance with 2.4.1(i) of this Part. In addition, Annual Examinations are to be carried out in accordance with 2.4.1(h) of this Part.

For ships fitted with only one water tube boiler for propulsion, the interval between 2 consecutive surveys is not to exceed 2.5 years for the first 7.5 years. Thereafter the boiler is to be surveyed annually.

An extension of the survey not exceeding 6 months may be granted by the Surveyor provided a survey is carried out in accordance with 2.4.1(i) of this Part, and provided the boiler is surveyed twice in every 5-year period for the first 7.5 years.

In addition, Annual Examinations are to be carried out in accordance with 2.4.1(h) of this Part for the first 7.5 years.

(ii) For ships fitted with fire tube boilers for propulsion, a minimum of 2 surveys are to be carried out during first 5-year Special Survey period. Thereafter, boilers are to be surveyed annually. The interval between any 2 surveys is not to exceed 36 months. In addition, Annual Examinations are to be carried out in accordance with 2.4.1(h) of this Part for the first 5-year Special Survey period.

(iii) Auxiliary boilers or thermal oil heaters, waste heat steam generators/economizers having a working pressure exceeding 0.35 MPa and heating surface exceeding 4.5 m^2, a minimum of 2 surveys are to be carried out during each 5-year Special Survey period. One such survey is to be carried out in conjunction with the Special Survey. In all cases, the interval between any 2 such surveys is not to exceed 36 months. An extension of the survey up to 3 months may be granted by the Surveyor in exceptional circumstances(1), provided a survey is carried out in accordance with 2.4.1(i) of this Part. In addition, Annual Examinations are to be carried out in accordance with 2.4.1(h) of this Part.

Note: (1) "Exceptional circumstances" means, e.g., unavailability of repair facilities, unavailability of essential materials, equipment or spare parts, or delays incurred by action taken to avoid severe weather conditions.

(b) Extension of boiler surveys, as specified in 1.6.9 (a)(i) and (iii) above.

1.6.10 Occasional surveys

Occasional surveys are to be carried out when ships have sustained damage, undergone major repairs or alterations, or lay-up and re-commissioning.

(a) Damage, major repair or alterations

(i) The Society is to be immediately informed about any deficiencies and damages to hull and machinery or other equipment classed, where these may be of relevance to the ship's class. An occasional survey is to be arranged for a date not later than that ship's arrival at the next port. A ship may be temporarily repaired and retained her class if the Surveyor deems so and reports to the Society that the ship has been repaired to such a degree as being considered in a technical fitness condition for the intended voyage. In such cases a permanent repair and survey are to be duly carried out. If the survey reveals that a ship's class has been affected, the class is to be maintained only on condition that the repairs or modifications demanded by the Society are to be carried out within the period specified by the Surveyor. Until full settlement of recommendations the class is to be restricted.

(ii) In the case of alterations, plans are to be approved before the work is commenced.

(iii) If any part of the main or auxiliary machinery including boilers, or insulation or fittings, is removed for repair or alteration, the exposed part of the structure normally not accessible is to be specially examined.

(iv) In exceptional cases, the inspection of hull and machinery, and the performance of the repairs required for maintenance of the original class may be dispensed with, if the Owner agree to the class and/or the range of service being restricted, or possibly a higher freeboard being assigned.

(b) Lay-up and re-commissioning

(i) The Society is to be notified by the Owner that a ship has been laid up. Ships intended to be laid up are to comply with the requirements of "Guidelines for Lay-up of Ships" of the Society. This status is to be noted in the Register, and surveys falling due during lay-up may then be held in abeyance until the ship re-commissions. Lay-up procedures and arrangements for maintenance of conditions during lay-up may be submitted to the Society for review and verified on board by the Surveyor.

(ii) In the case of ships which have been laid up for an extended period (i.e. 6 months or more) the requirements for surveys on re-commissioning are to be specially considered in each case, due regard being given to the status of surveys at the time of the commencement of the lay-up period, the length of the period and the conditions under which the ship has been maintained during that period.

(iii) Where the lay-up preparations and procedures have been submitted to the Society for review and verified by annual lay-up surveys, consideration may be given to deducting part of or all of the time in lay-up from the progression of survey intervals.

(iv) For ships returning to active service regardless of whether the Society has been informed previously that the ship has been laid up, a re-commissioning survey is required.

1.6.11 Miscellaneous items

(a) If the recommendations of the Surveyor are considered in any case to be unnecessary or unreasonable, appeal may be made to the Society, who may direct a special examination to be held.

(b) It is the responsibility of the Owner to ensure that all surveys necessary for the maintenance of class are carried out at the proper time under the supervision of the Surveyor. It is, however, the normal practice of the Society to give timely notice to Owners when surveys become due, but the non-receipt of such notice, or of notice regarding other surveys, does not absolve Owners from their responsibility.

(c) Period of class

The ship's hull and machinery are always assigned the same period of validity of class (duration of one class period). The class continues to be valid, provided that the hull and machinery are subjected to all surveys stipulated and that any repairs required are carried out to the satisfaction of the Society.

(d) If the hull and/or the machinery are not subjected to the prescribed surveys on their due dates, a ship's class is to be suspended for both hull and machinery. If special shipboard equipment classed is not subject to the prescribed surveys on their due dates, the class of the special equipment only is to be suspended (i.e. Aux. boiler, CAS, CAB or CAU, or RMS).

1.7 Approval

1.7.1 Survey reports

Upon completion of a survey of a classed ship, the Surveyor is to send one original and one copy of his reports with his recommendations, if set up, to the applicant, and at the same time, one copy to the Society. The Society reserves the right for final decision on the Surveyor's recommendations.

1.7.2 Decision of classification

Any member of the Committee or the staff of the Society having either direct or indirect interest in a ship to be classed, is not permitted to be present at or to participate in the meeting for the decision of the classification.

1.8 Certificates of Classification

1.8.1 Final certificate of classification

When the required reports and interim certificates on completion of the classification initial survey during construction of new ships, or the classification survey of ships not built under survey have been submitted for classification and approved by the Classification Committee, final Certificates of Classification signed by the Chairman, the President and the Chief Surveyor will be issued to the builders or owners.

1.8.2 Interim certificates of classification

(a) Upon completion of a classification entry survey, when the ship in the Surveyor's opinion, is considered to be in a fit and efficient condition and eligible to be classed, the Surveyor is permitted to issue an Interim Certificate of Classification stating that he has recommended to the Classification Committee that the ship is in a fit and efficient condition and eligible to be classed.

(b) The validity of Interim Certificates is limited to 6 months.

1.9 Notice of Surveys

1.9.1 It is the responsibility of the Owners to ensure that all surveys necessary for the maintenance of class are carried out at the proper time and in accordance with the instruction of the Society.

1.9.2 The Society will give timely notice to an Owner about forthcoming surveys by means of a letter or e-mail. The omission of such notice, however, does not absolve the Owner from his responsibility to comply with CR's survey requirements for maintenance of class.

1.10 Suspension and Withdrawal of Class

1.10.1 In any of the following cases, the class of a ship is liable to be withheld or if already granted, may be withdrawn or expunged from the Register:

(a) The wording, symbols or marks on the certificate is altered, defaced or obliterated.

(b) Any damage or casualty is done to the hull or machinery to such an extent as affecting her class in the Register and the damage so sustained has been un-repaired or not been repaired to the satisfaction of the Society.

(c) The structure or arrangement of the hull, equipment and machinery have been altered without approval of the Society.

(d) The loading of the ship exceeds the load line assigned by the Society or the freeboard marks have been placed higher on the ship's sides than the positions assigned by the Society.

(e) The applicant fails to pay any survey fees or expenses.

(f) The applicant fails to fulfill the Society's requirements.

(g) The Owner so request.

(h) If the Annual Survey or Intermediate Survey is not complete within 3 months of the due date of the survey.

1.10.2 Class suspension and cancellation

(a) Class will be suspended automatically in the following condition.

(i) If a class periodical survey , MCS survey or HCS survey is over-due.

(ii) If any outstanding recommendation is over-due.

(iii) If other required survey in the Rules is over-due. However, over-due of required survey of environmental protection notation as listed in Table I 1-10 will not cause the suspension of class. Class will be reinstated automatically from the date of satisfactory completion of the over-due surveys or the over-due recommendations.

(b) If the Owners failed to apply for a survey on any casualty, damage, operational failure or any repair upon the first opportunity, class may be suspended until the date before the repair survey is completed satisfactorily.

(c) Class Maintenance Certificate is not to be issued during the period of class suspension and before the required survey is completed satisfactorily.

(d) Class suspended for over 3 months may result in cancellation of class.

1.10.3 Change of periodicity, postponement or advance of surveys.

(a) The Society reserves the right, after due consideration, to change the periodicity, postponement or advance of surveys, taking into account particular circumstances.

(b) When a survey becomes overdue during a voyage, the following applies:

(i) In the case of a class Special Survey becomes overdue during a voyage, the Society may grant an extension to allow for completion of the class Special Survey, provided there is documented agreement to such an extension prior to the expiry date of the Certificate of Classification, adequate arrangements have been made for attendance of the surveyor at the first port of call and the Society is satisfied that there is technical justification for such an extension. Such an extension will be granted only until arrival at the first port of call after the expiry date of the Certificate of Classification.

However if owing to "exceptional circumstances" as defined below, the class Special Survey cannot be completed at the first port of call, the Society may grant an extension according to 1.6.4(d) of this Chapter, but the total period of extension shall in no case be longer than 3 months after the original due date of the class Special Survey.

"Exceptional circumstances" means:

(1) unavailability of dry-docking facilities, or

(2) unavailability of repair facilities, or

(3) unavailability of essential materials, equipment or spare parts, or

(4) delays incurred by action taken to avoid severe weather conditions.

(ii) In the case of Annual and Intermediate Surveys, no postponement is granted. Such surveys are to be completed within their prescribed windows;

(iii) In the case of all other periodical surveys and recommendations, extension of class may be granted until the arrival of the ship at the first port of call.

1.11 Reclassification

1.11.1 When reclassification is desired for a ship for which the class previously assigned has been withdrawn, the Society is to direct a reclassification survey, appropriate to the age of the ship and the circumstances of the case, to be carried out by the Surveyor. If at such a survey, the ship is found or placed in a good and efficient condition in accordance with the requirements of the Rules, the Society is prepared to reinstate her original class as may be deemed necessary. The date of reclassification is to be recorded in the Register.

1.12 Survey Fees and Expenses

1.12.1 Survey fees are to be chargeable and expenses to be reimbursed if incurred according to the "Scale of Survey Fees" of the Society. All fees and expenses are to be promptly paid by the Owner or the applicant or their representatives after completion of each survey. In default of such payment, the Society may withhold the issuance of the certificates or reports. If the class is already granted, the same may be withdrawn or expunged from the Register.

1.13 International Conventions and Codes

Where authorized by the Administration of a country signatory thereto and upon request of the Owners of a classed ship or one intended to be classed, the Society will survey a new or existing ship of the applicable size for compliance with the provisions of applicable International Conventions and Codes including the following, and certify thereto in the manner prescribed in the Convention and Code.

- International Convention on Load Line, 1996, as amended.

- International Convention for the Safety of Life at Sea, 1974, as amended.

- International Convention on Tonnage Measurement of Ships, 1969.

- International Convention for the Prevention of Pollution from Ships, 1973/78, as amended.
- International Code for the Constuction and Equipment of Ships Carrying Liquefied Gases in Bulk.
- International Code for the Construction and Equipment of Ships Carrying Dangerous Chemicals in Bulk.
- International Code for Safety for High Speed Craft (HSC Code), 2000.

1.14 Governmental Regulations

Where authorized by a government agency and/or upon request of the Owners of a classed ship or one intended to be classed, the Society will survey and certify a new or existing ships for compliance with particular regulations of that government on their behalf.

All work performed on behalf of governments shall be governed by the terms and conditions of the Rules unless the government specifies otherwise.

Owners of a classed ship are required to notify the Society when a vessel changes flag so that appropriate action can be determined with respect to the scope of CR's authorization by the new Flag Administration.

1.15 Sea Trials

1.15.1 In the classification survey of all ships, sea trials specified in following (a) to (j) are to be carried out in full load condition, in the calmest possible sea and weather condition and at the deep unrestricted water. However, where sea trials cannot be carried out in full load condition, sea trials may be carried out in an appropriate loaded condition. The noise measurements specified in (k) are to be carried out at either the full load condition or the ballast condition.

(a) Speed test.

(b) Astern test.

(c) Steering test and the change-over test from the main to auxiliary steering gear.

(d) Turning test.
The turning test of an individual ship may be dispensed with, provided that sufficient data is available from the turning test of a sister ship and subject to special approval by the Society.

(e) Confirmation of no abnormality for the operating condition of machinery and behaviors of the ship during the trials.

(f) Performance test of windlass.

(g) Performance test of automatic and remote control systems for main propulsion machinery or the controllable pitch propellers, boilers and electric generating sets.

(h) The accumulation test of boilers.

(i) Measurement of the torsional vibration for the shafting systems. (refer to Chapter 6 of Part IV)
Where it is deemed appropriate by the Society, the measurement of the torsional vibration for the shafting systems during the sea trials may be dispensed with, provided that sufficient analysis data (e.g. torsional vibration analysis) which ensure there is no critical vibration within the service speed range.

(j) Measurement of the sound pressure levels of fixed fire detection and fire alarm systems.

(k) Noise measurements. (Refer to Chapter 34 of Part II, as applicable)

(l) Other tests where deemed necessary by the Society.

Some sea trial tests of an individual ship may be dispensed with provided that the available data can be obtained from those of a sister ship or other adequate means and a special approval in given by the Society.

1.15.2 The results of the tests are to be submitted to the Society as sea trial record.

1.15.3 In the case of classification survey of the ships not built under the Society's survey, the above tests may be dispensed with, provided that sufficient data on the previous tests are available and no alteration affecting the tests specified above have been made after the previous tests.

1.16 Stability Experiment

1.16.1 In the classification survey, stability experiment by inclining test of a ship are to be carried out upon completion of the ship (See Appendix 2). A stability information booklet, which is to be prepared on the basis of the particulars of stability determined by the results of stability experimental and to be approved by the Society, is to be provided on board. The intact stability criteria in Part A of 2008 IS Code (MSC.267(85)) shall be as a minimum requirement.

1.16.2 Inclining test may be dispensed with, provided that:

(a) The ship's basic stability data is available from inclining test of a sister ship, if a weight survey is carried out upon completion, and in comparison with the data derived from the sister ship, the deviation from the lightship displacement is not exceeding 1% for ship of 160 m or more in length, and 2% for ship of 50 m or less in length and as determined by linear interpolation for intermediate lengths, and a deviation from lightship LCG not exceeding 0.5 % of subdivision length (Ls); or

(b) The ship is especially designed for the carriage of liquid or ore in bulk, when reference to existing data for similar ships clearly indicates that due to the ship's proportions and arrangements, more sufficient GM will be available in all probable loading cases.

1.16.3 Where any alteration are made to a ship so as to materially affect the stability information, amended and approved stability information shall be provided. The ship shall be re-inclined if anticipated deviations exceed one of the values specified in next paragraph.

1.16.4 At periodical intervals not exceeding 5 years, a lightweight survey shall be carried out on all passenger ships to verify any changes in lightweight displacement and LCG. The ship shall be re-inclined whenever, in comparison with the approved stability information, a deviation from the lightship displacement exceeding 2% or a deviation of LCG exceeding 1% of Ls is found or anticipated.

1.17 Liability and Compensation

1.17.1 Article 1

(a) CR CLASSIFICATION SOCIETY is a Society (the "Society") whose purpose is the classification (« Classification ») of any ship or vessel or structure of any type or part of it or system therein collectively hereinafter referred to as a "Unit" whether linked to shore, river bed or sea bed or not, whether operated or located at sea or in inland waters or partly on land, including submarines, hovercrafts, drilling rigs, offshore installations of any type and of any purpose, their related and ancillary equipment, subsea or not, such as well head and pipelines, mooring legs and mooring points or otherwise as decided by the Society.

The Society:

(i) prepares and publishes Rules for classification, Guidance Notes and other documents (« Rules »);

(ii) issues Certificates, Attestations and Reports following its interventions (« Certificates »);

(iii) publishes Registers on the CR website

(b) The Society also participates in the application of National and International Regulations or Standards, in particular by delegation from different Governments. Those activities are hereafter collectively referred to as « Certification ».

(c) The Society can also provide services related to Classification and Certification such as ship and company safety management certification; ship and port security certification, training activities; all activities and duties incidental thereto such as documentation on any supporting means, software, instrumentation, measurements, tests and trials on board.

(d) The Society can also provide services in independent surveys, such as independent survey of a ship, materials and equipment, or other equipment carried out according to the Purchase Agreement or specified rules; or appraisal before purchase of a non-CR class ship or verification of seaworthiness of a ship conducted at the request of the owner; or damage survey of a non-CR class ship as required by an insurance company.

(e) The interventions mentioned in (a), (b) and (c) are referred to as « Services ». The party and/or its representative requesting the services is hereinafter referred to as the « Client ». The Services are prepared and carried out on the assumption that the Clients are aware of the International Maritime and/or Offshore Industry (the "Industry") practices.

(f) The Society is neither and may not be considered as an Underwriter, Broker in ship's sale or chartering, Expert in Unit's valuation, Consulting Engineer, Controller, Naval Architect, Manufacturer, Shipbuilder, Repair yard, Charterer or Shipowner, who are not relieved of any of their expressed or implied obligations by the interventions of the Society.

1.17.2 Article 2

(a) Classification is the appraisement given by the Society for its Client, at a certain date, following surveys by its surveyors along the lines specified in 1.17.3 and 1.17.4 hereafter on the level of compliance of a Unit to its Rules or part of them. This appraisement is represented by a class entered on the Certificates and periodically transcribed in the Society's Register.

(b) Certification is carried out by the Society along the same lines as set out in 1.17.3 and 1.17.4 hereafter and with reference to the applicable National and International Regulations or Standards.

(c) It is incumbent upon the Client to maintain the condition of the Unit after surveys, to present the Unit for surveys and to inform the Society without delay of circumstances which may affect the given appraisement or cause to modify its scope.

(d) The Client is to give to the Society all access and information necessary for the performance of the requested services.

1.17.3 Article 3

(a) The Rules, procedures and instructions of the Society take into account, at the date of their preparation, the state of currently available and proven technical knowledge of the Industry. They are not a code of construction neither a guide for maintenance or a safety handbook. Committees consisting of personalities from the Industry contribute to the development of those documents.

(b) The Society only is qualified to apply its Rules and to interpret them. Any reference to them has no effect unless it involves the Society's intervention.

(c) The Services of the Society are carried out by professional Surveyors according to the Code of Ethics of CR CLASSIFICATION SOCIETY.

(d) The operations of the Society in providing its Services are exclusively conducted by way of random inspections and do not in any circumstances involve monitoring or exhaustive verification.

1.17.4 Article 4

The Society, acting by reference to its Rules:

(a) Reviews the construction arrangements of the Units as shown on the documents presented by the Client;

(b) Conducts surveys at the place of their construction;

(c) Classes Units and enters their class in its Register;

(d) Surveys periodically the Units in service to note that the requirements for the maintenance of class are met. The Client is to inform the Society without delay of circumstances which may cause the date or the extent of the surveys to be changed.

1.17.5 Article 5

(a) The Society acts as a provider of services. This cannot be construed as an obligation bearing on the Society to obtain a result or as a warranty.

(b) The certificates issued by the Society pursuant to 1.17.5(a) here above are a statement on the level of compliance of the Unit to its Rules or to the documents of reference for the Services provided for. In particular, the Society does not engage in any work relating to the design, building, production or repair checks, neither in the operation of the Units or in their trade, neither in any advisory services, and cannot be held liable on those accounts. Its certificates cannot be construed as an implied or express warranty of safety, fitness for the purpose, seaworthiness of the Unit or of its value for sale, insurance or chartering.

(c) The Society does not declare the acceptance or commissioning of a Unit, nor of its construction in conformity with its design, that being the exclusive responsibility of its owner or builder, respectively.

(d) The Services of the Society cannot create any obligation bearing on the Society or constitute any warranty of proper operation, beyond any representation set forth in the Rules, of any Unit, equipment or machinery, computer software of any sort or other comparable concepts that has been subject to any survey by the Society.

1.17.6 Article 6

(a) The Society accepts no responsibility for the use of information related to its Services which was not provided for the purpose by the Society or with its assistance.

(b) If the Services of the Society cause the Client a damage which is proved to be the direct and reasonably foreseeable consequence of an error or omission of the Society, its liability towards the Client is limited to two times the amount of fee paid for the Service having caused the damage, but no greater than ten million (NT$10,000,000) New Taiwan dollars. The Society bears no liability for indirect or consequential loss such as e.g. loss of revenue, loss of profit, loss of production, loss relative to other contracts and indemnities for termination of other agreements.

(c) All claims are to be presented to the Society in writing within 3 months of the date when the Services were supplied or (if later) the date when the events which are relied on of were first known to the Client, and any claim which is not so presented shall be deemed waived and absolutely barred.

1.17.7 Article 7

(a) Requests for Services are to be in writing.

(b) Either the Client or the Society has rights to terminate the requested Services after giving the other party 30 days' written notice, for convenience, and without prejudice to the provisions in 1.17.8 hereunder.

(c) The class granted to the concerned Units and the previously issued certificates remain valid until the date of effect of the notice issued according to 1.17.7(b) hereabove subject to compliance with 1.17.2(c) hereabove and 1.17.8 hereunder.

1.17.8 Article 8

(a) The Services of the Society, whether completed or not, involve the payment of fee upon receipt of the invoice and the reimbursement of the expenses incurred.

(b) Overdue amounts are increased as of right by interest in accordance with the applicable legislation.

(c) The class of a Unit may be suspended in the event of non-payment of fee after a first unfruitful notification to pay.

1.17.9 Article 9

The documents and data provided to or prepared by the Society for its Services, and the information available to the Society, are treated as confidential. However:

(a) Clients have access to the data they have provided to the Society and, during the period of classification of the Unit for them, to the classification file consisting of survey reports and certificates which have been prepared at any time by the Society for the classification of the Unit;

(b) Copy of the documents made available for the classification of the Unit and of available survey reports can be handed over to another Classification Society in case of the Unit's transfer of class;

(c) The certificates, documents and information relative to the Units classed with the Society may be reviewed and disclosed upon order of the concerned governmental or inter-governmental authorities or of a Court having jurisdiction. The documents and data are subject to a file management plan.

1.17.10 Article 10

Any delay or shortcoming in the performance of its Services by the Society arising from an event not reasonably foreseeable by or beyond the control of the Society shall be deemed not to be a breach of contract.

1.17.11 Article 11

(a) In case of diverging opinions during surveys between the Client and the Society's surveyor, the Society may designate another of its surveyors at the request of the Client.

(b) Disagreements of a technical nature between the Client and the Society can be submitted by the Society to the advice of its Head Office.

1.17.12 Article 12

(a) Disputes over the Services carried out by delegation of Governments are assessed within the framework of the applicable agreements with the States, international Conventions and national rules.

(b) Disputes arising out of the payment of the Society's invoices by the Client are submitted to Taiwan Taipei District Court.

(c) Other disputes over the present Article 1.17 or over the Services of the Society are exclusively submitted to arbitration, by three arbitrators, in Taipei according to the Arbitration Act or any statutory modification or re-enactment thereof. The contract between the Society and the Client shall be governed by the Republic of China (Taiwan) law.

1.17.13 Article 13

(a) The Article 1.17 constitutes the sole contractual obligations binding together the Society and the Client, to the exclusion of all other representation, statements, terms, conditions whether express or implied. They may be varied in writing by mutual agreement.

(b) The invalidity of one or more stipulations of the present Article 1.17 does not affect the validity of the remaining provisions.

(c) The definitions herein take precedence over any definitions serving the same purpose which may appear in other documents issued by the Society.

Table I 1-1
List of Automation Symbol affixed to CMS

Symbol	Description	Reference
CAS	This symbol will be assigned when a ship's machinery installation complies with the requirements for automatic or remote control and monitoring system.	Part VIII Chapter 4
CAU	This symbol will be assigned when a ship's machinery installation complies with the requirements for automatic or remote control and monitoring system with unattended machinery spaces.	Part VIII Chapter 5
CAB	This symbol will be assigned when a ship is capable of operating as **CAU** but because of their compact propulsion machinery space design are not fitted with the means to control the propulsion and its associated machinery from a centralized location within the propulsion machinery space.	Part VIII Chapter 6

Table I 1-2
List of Ship Type Notation

Notation	Description	Reference
Barge	Non-self-propelled barges intended to be towed or pushed	Part II and Part III Chapter 9
Bulk Carrier	For ships intended primarily to carry dry cargo in bulk, generally having single deck, topside tanks, hopper side tanks and double bottom in cargo spaces, cargo holds bounded by single or double side skin.	Part III Chapter 1 and 1A
Chemical Tanker	For ships which are constructed generally with integral tanks and intended primarily to carry chemicals in bulk.	Part III Chapter 5
Container Carrier	For ships which are built for the carriage of containers in holds or on decks.	Part III Chapter 3
Fire-fighting Ship N	Ships intended for fire-fighting operation are to be assigned this class notation, with N being **1**, **2** or **3**.	Part III Chapter 12
Fishing Vessel	For ships which are built for the purpose of fishing.	Part III Chapter 7
Floating Dock	For floating docks which comply with the applicable requirements in Chapter 8 of Part III.	Part III Chapter 8
General Dry Cargo Ship	For ships which are defined in Part I Chapter 2.	the Rules for Steel Ships
General Dry Cargo Ship with Double Hull	For ships which are defined in Part I/2.1.2(p)(x).	the Rules for Steel Ships
Liquefied Gas Carrier	For ships which are built for the carriage of liquefied gas in bulk.	Part III Chapter 4
Ore Carrier	For ships which are constructed generally with single deck, two(2) longitudinal bulkheads and a double bottom throughout the cargo length area and intended primarily to carry ore cargoes in the center holds only.	Part III Chapter 1
Oil Tanker	For ships which are constructed generally with integral tanks and intended primarily to carry oil in bulk, having flash point at or below 60°C (closed cup test). When carry oil product with a flash point exceeding 60°C such as asphalt, additional service notation "**Flash Point > 60°C**" should be added.	Part III Chapter 2 and 2A
Ore/Oil Carrier	For ships which are constructed generally with single deck, two(2) longitudinal bulkheads and a double bottom throughout the cargo length area and intended primarily to carry ore cargoes in the center holds or oil cargoes in center holds and wing tanks.	Part III Chapter 2 and 2A
Ore/Bulk/Oil Carrier	For ships which are constructed generally with single deck, double bottom, hopper side tanks and topside tanks and with single or double side skin construction in the cargo length area, and intended primarily to carry oil or dry cargoes, including ore, in bulk.	Part III Chapter 2 and 2A
Passenger Ship	For ships which carry more than 12 passengers.	the Rules for Steel Ships

Notation	Description	Reference
Refrigerated Cargo Ship	For ships which are specially designed and constructed for the carriage of refrigerated cargoes.	Part X
RO/RO Cargo Ship	For ships which are specially designed and constructed for the carriage of vehicles, and cargoes in pallet form or in containers and loaded/unloaded by wheeled vehicles.	Part III Chapter 6
Tug	For ships which are built for the purpose of towing or pushing other ships.	Part III Chapter 11
Escort Tug (Fs, t, v)	An escort tug is a tug intended for escort operation. The escort rating number (**Fs, t, v**) shall be determined by approved full scale trials.	Part III Chapter 11A
Mobile Offshore Unit	For all mobile offshore units built for the purpose of ocean service	Part III Chapter 13
Self-Propelled Unit	This notation will be assigned to units designed with means of propulsion capable of propelling the unit during long distance ocean transits without external assistance.	Part III Chapter 13
Non Self-Propelled Unit	This notation will be assigned to units that are not a self-propelled unit.	Part III Chapter 13
Self-Elevating Unit	This notation will be assigned to units with movable legs capable of raising its hull above the surface of the sea and lowering it back into the sea.	Part III Chapter 13
SUBMARINE	This notation will be assigned to submarines complying with the requirements of Chapter 1 to Chapter 3 of the Rules for the Construction and Classification of Submarines (hereinafter referred to as the Rules for Submarines).	Chapter 1 to Chapter 3 of the Rules for Submarines
OSV	This notation will be assigned to **O**ffshore **S**ervice **V**essel which is intended for supporting offshore installations. If the vessel complies with the additional requirements for specific operations or design condition, the corresponding qualifiers specified in Chapter 16 of Part III will be affixed to this notation.	Part III Chapter 16
Standby Vessel	This notation will be assigned to the vessel designed to carry out standby and rescue services to offshore installations. If the vessel complies with the additional requirements for specific operations or design condition, the corresponding qualifiers specified in Chapter 16 of Part III will be affixed to this notation.	Part III Chapter 16

Note:

(1) For ships deemed necessary by the Society, an appropriate notation except specified above may be affixed to classification characters.

Table I 1-3
List of Additional Service Notation

Notation	Description	Reference
CSR	This notation will be assigned to bulk carriers or oil tankers which fully comply with the IACS's **C**ommon **S**tructural **R**ules.	IACS's **C**ommon **S**tructural **R**ules
BC-A	This notation will be assigned to bulk carriers designed to carry dry bulk cargoes of cargo density 1.0 t/m^3 and above with specified holds empty at maximum draught in addition to **BC-B** conditions.	Part III/1.2
BC-B	This notation will be assigned to bulk carriers designed to carry dry bulk cargoes of cargo density of 1.0 t/m^3 and above with all cargo holds loaded in addition to **BC-C** conditions.	Part III/1.2
BC-C	This notation will be assigned to bulk carriers designed to carry dry bulk cargoes of cargo density less than 1.0 t/m^3.	Part III/1.2
{Maximum cargo density (t/m^3)}	This service feature will be indicated within the annotation for notations **BC-A** and **BC-B** if the maximum cargo density is less than 3.0 t/m^3.	Part III/1.2
{No MP}	This service feature will be indicated within the annotation for notation **BC-A, BC-B** and **BC-C** if the ship has not been designed for loading and unloading in multiple ports in accordance with the conditions specified in 1.2.5(c) of Part III.	Part III/1.2
{Holds a, b,…… may be empty}	This service feature will be indicated within the annotation for notation **BC-A,** for the combination of specified empty holds.	Part III/1.2
GRAB [X]	This notation will be assigned to ships, of which the holds are to be designed for loading/unloading by grabs having a maximum specific weight **X** equal to or greater than 20 tons.	Part III/1.2
GRAB	This notation will be assigned to ships strengthened for loading/unloading cargoes by means of grabs or buckets deemed as appropriate by the Society.	the Rules for Steel Ships
Flash Point > 60°C	For oil tankers intended to carry oil having flash point above 60°C (closed cup test).	Part III Chapter 2 and 2A
ESP	This notation (**E**nhanced **S**urvey **P**lan) will be assigned to oil tankers, combination carriers, bulk carriers, ore carriers and chemical tankers, as defined in 2.1.2 of Part I which are subject to an enhanced survey plan.	Part I Chapter 2
PSPC	This notation (**P**erformance **S**tandard for **P**rotective **C**oating) will be assigned to any ship where the applicable requirements in 23.1.4 of Part II are complied with.	Part II/23.1.4
HSC-PA or HSC-PB	This notation will be assigned to the craft meeting the Rules for High-Speed Craft and the requirements of category A (up to 450 passengers) or B (over 450 passengers) of International Code of Safety for High-Speed Craft (hereinafter referred to as HSC Code).	the Rules for High-Speed Craft and HSC Code
HSC-C	This notation will be assigned to the cargo craft meeting the Rules for High-Speed Craft and the requirements of cargo craft category of HSC Code.	the Rules for High-Speed Craft and HSC Code
LSC	This notation (**L**ight **S**tructure **C**raft) will be assigned to craft not engaged in international voyages which are capable of maximum speed $2.36 \leq V/\sqrt{L}$ and not to proceed in the course of their voyage more than the time as specified in 1.3.4 of the HSC Code. The craft with **LSC** notation are to comply with the requirements of the Rules for High-Speed Craft, and in addition the requirements of Chapter 4, 7 and 8 of HSC Code as applicable.	the Rules for High-Speed Craft and Chapter 4, 7 and 8 of HSC Code

Notation	Description	Reference
PMA	This notation (**P**ermanent **M**eans of **A**ccess) will be assigned to ships where the applicable requirements in Chapter 28 of Part II are complied with.	Part II Chapter 28
GBS	This notation will be assigned to GBS ships which fully comply with the requirements of Part XIV	Part XIV
BP[X]	This notation will be assigned to ships which have a maximum bollard pull load **X** in tons.	Part III/11.9
NR	This notation (the comfort **R**ating of **N**oise) will be assigned to ships where the applicable requirements in Chapter 34 of Part II are complied with.	Part II Chapter 34
BC-XII	This notation will be assigned to ships where the applicable requirements in Chapter 14 of Part III are complied with.	Part III Chapter 14
SPS	This notation will be assigned to ships that comply with the IMO Code of Safety for Special Purpose Ships (SPS Code).	SPS Code
VR	This notation will be assigned to ships which comply with the limits for vibration of ISO 20283-5:2016, as given in Table II 34-2.	Part II Chapter 34
Smartship{Hx; Mx; Ex; Nx; Cx; Ix}	This notation will be assigned to ships which comply with the requirements of the Guidelines in terms of smart hull, smart machinery, smart energy efficiency management, smart navigation, smart cargo management, smart integration platform. If the ship complies with the additional requirements for specific operations or design condition, the corresponding qualifiers specified in Guidelines for Smart Ships will be affixed to this notation.	Guidelines for Smart Ships
HLA	This notation (**H**eavy **L**ift **A**ppliance) will be assigned to ships equipped with heavy lift appliance.	Rules for the Construction and Survey of Cargo Gears

Table I 1-4
List of Service Restriction Notation

Notation	Description	Reference
Coastal Service	Service along a coast, the geographical limits of which will be indicated in the Register, and for a distance out to sea generally not exceeding 30 nautical miles, unless some other distance is specified for 'Coastal Service' by the Administration with which the ship is registered, or by the Administration of the coast off which it is operating, as applicable. The operation/service limitations, such as significant wave height, or maximum voyage etc., may be indicated in the bracket affixed after this notation.	
Greater Coastal Service	Service along a coast, the geographical limits of which will be indicated in the Register, and for a distance out to sea generally farther than the area of **Coastal Service** in domestic voyage. The operation/service limitations, such as significant wave height, or maximum voyage etc., may be indicated in the bracket affixed after this notation.	
Protected Waters Service	Service in sheltered water adjacent to sand banks, reefs, breakwaters or other coastal features, and in sheltered waters between islands.	
Specified Operating Area Service	Service within one or more geographical area(s) which will be indicated in the Register.	
Specified Route Service	Service between two or more ports or other geographical features which will be indicated in the Register.	

Table I 1-5
List of Additional Survey Notation

Notation	Description	Reference
IWS	This notation (**I**n **W**ater **S**urvey) may be assigned to ships which are provided with suitable arrangements to facilitate the In-Water Surveys.	Part I/1.6.7(b) & 2.2.2
PCM(1)	This notation (**P**ropeller shaft **C**ondition **M**onitoring) will be assigned when oil lubricated propeller shaft arrangements with approved oil glands are fitted and the requirements of 2.3.5 of Part I of the Rules are complied with.	Part I/2.3.5
PMS(1)	This notation (**P**lanned **M**aintenance **S**cheme for machinery) will be assigned to ships for which an approved planned maintenance scheme for machinery is adopted as an alternative to continuous survey for machinery.	Part I/1.6.4(g)
CM(1)	This notation (**C**ondition **M**onitoring for machinery) will be assigned to ships for which an approved condition monitoring system is fitted.	Part I/1.6.4(h)
CBM(1)	This notation (**C**ondition **B**ased **M**aintenance for machinery) will be assigned to ships for an approved condition based maintenance scheme.	Part I/1.6.4(h)

Note:
(1) Means notation, when assigned, to be added after the classification symbol **CMS**.

Table I 1-6
List of Special Equipment Notation

Notation	Description	Reference
CCB	This notation (**C**entralized System for **C**argo and **B**allast Water Handling) will be assigned to ships provided with centralized system for cargo and ballast water handling.	Part VIII/7.10
DPS-N	This notation (**D**ynamic **P**ositioning **S**ystem), with N being **I**, **II** or **III**, will be assigned to ships provided with dynamic positioning system.	Part IV Chapter 10
ETA	This notation (**E**mergency **T**owing **A**rrangement) will be assigned to tankers provided with emergency towing arrangements.	Part II/25.7
Helideck-N	This notation(**Heli**copter **deck**), with N being **I**, **II, III** or **IV**, will be assigned to ships provided with helicopter facilities in accordance with related requirements of the Rules.	Part II Chapter 12A
HHA	This notation (**H**igh **H**olding **A**nchor) will be assigned to ships receiving the equipment symbol **E,** with a specially considered anchor of approved superior holding ability for which the mass of the anchor may be reduced up to a maximum of 25% from the mass specified in Table II 25-1.	Part II/25.3 and Part XI Chapter 12
SHHA	This notation (**S**uper **H**igh **H**olding **A**nchor) will be assigned to ship receiving the equipment symbol **E,** with a specially considered and approved anchor that have at least 4 times the holding power of ordinary stockless anchors of the same weight. The mass of each bower anchor can be reduced by up to 50% of the mass specified in Part III 5.1.4(a), (see Table III 5-1), of the Rules.	Part II/25.3 and Part XI Chapter 12 of the Rules and/or Part III/ 5.1.4(a) of the Rules for High-Speed Craft
IGS(1)	This notation (**I**nert **G**as **S**ystem) will be assigned when a ship intended for the carriage of oil in bulk, or for the carriage of liquid chemicals in bulk, fitted with an approved system for producing gas for inert the cargo tanks.	Part VI/5.8
LCS	This notation (**L**oading **C**omputer **S**ystem) will be assigned where an approved loading computer system has been installed as a classification requirement in 1.1.13 of Part I.	Part I/1.1.13 & Appendix 1 & Part II/3.5
VEC	This notation (**V**apor **E**mission **C**ontrol) will be assigned to ships equipped with cargo vapor emission control system in compliance with the requirements in 3.16 of Part VI. The notation **–T** is added to the notation where, in addition, the ship is fitted with specific arrangements for transferring cargo vapors to another ship.	Part VI/3.16
AIP(1)	This notation (**A**ir **I**ndependent **P**ropulsion System) will be assigned if submarines provided with an Air Independent Propulsion system which complying with the requirements of section 4.4 of the Rules for Submarines.	Section 4.4 of the Rules for Submarines
CSS	This notation (**C**ontainer **S**ecuring **S**ystems) will be assigned to ships which have a certified container securing system for unrestricted service.	Guidelines for Certification of Container Securing Systems
CSP	This notation (**C**ontainer **S**ecuring **P**rogram) will be assigned to ships which have certified container securing program provided onboard.	Guidelines for Certification of Container Securing Systems
CSP-RSS	This notation (**C**ontainer **S**ecuring **P**rogram**)** with suffix **(R**oute **S**pecific **S**ervice) will be assigned to ships which signify the certification of the container securing program's capability to address both unrestricted service and route specific service.	Guidelines for Certification of Container Securing Systems
Elev	The notation (**Elev**ator) may be assigned to ships under owner's request where the applicable requirements in the Guidelines are complied with.	Guidelines for Elevators

Notation	Description	Reference
AccGui Elev	The notation (**Acc**essible and **Gui**de **Elev**ator) will be assigned to ships which have accessible and guide facilities for disabled passengers under owner's request where the applicable requirements in the Guidelines are complied with.	Guidelines for Elevators
FC Energy(1)	This notation (**F**uel **C**ell **Energy**) will be assigned to ships where the fuel cell energy source is used for essential, important or emergency services.	Guidelines for Fuel Cell Installations
FC Installation(1)	This notation (**F**uel **C**ell **Installation**) will be assigned to ships complying with the safety and environmental requirements where the fuel cell energy source is not used for essential, important or emergency services.	Guidelines for Fuel Cell Installations
Gas Fuel(1)	This notation (**Gas Fuel**) will be assigned to ships where only the gas fuel is used for main propulsion engines.	Guidelines for Natural Gas-Fuelled Engine Installations
Dual Fuel(1)	This notation will be assigned to ships where the gas fuel and oil fuel are used for main propulsion engines.	Guidelines for Natural Gas-Fuelled Engine Installations
Gas Fuel Ready-N	This notation, with **N** being **I**, **II**, **III**, will be assigned to the ships where the applicable requirements in the Guidelines for LNG Fuel Ready Ships are complied with.	Guidelines for LNG Fuel Ready Ships
Walk-to-Work	The notation (**Walk-to-Work)** will be assigned to ships which comply with the requirements of the Guidelines for Offshore Access Walk to Work Gangway.	Guidelines for Offshore Access Walk to Work Gangway
HVSCS	The notation (**HVSCS)** will be assigned to ships which comply with the requirements of the Guidelines for High Voltage Shore Connection Systems.	Guidelines for High Voltage Shore Connection Systems
Cyber-S	The notation (**Cyber-S)** will be assigned to ships which comply with the requirements of the Guidelines for Cyber Security Onboard Ships.	Guidelines for Cyber Security Onboard Ships
SCR	The notation (**SCR)** will be assigned to ships which comply with the requirements of the Guidelines for Selective Catalytic Reduction Systems.	Guidelines for Selective Catalytic Reduction Systems
CLB	The notation (**CLB)** will be assigned to ships which comply with the requirements of the Guidelines for Lithium-Ion Batteries Applied to Marine System / Equipment.	Guidelines for Lithium-Ion Batteries Applied to Marine System / Equipment
ADW	This notation will be assigned to ships intended for regular anchoring at deep and unsheltered water.	Part II/25.11

Note:

(1) It means that the notation, when assigned, is to be added after the classification symbol **CMS**.

Table I 1-7
List of Ice Class Notation

Notation	Description	Reference
Ice Class N	This notation, with N being **IAS**, **IA**, **IB** or **IC**, will be assigned to ships where the requirements in Chapter 10 of Part III of the Rules are complied with. If ships intend to navigate in polar waters and comply with the requirements in Chapter 10A of Part III of the Rules, this notation, with N being **PC1, PC2**… or **PC7**, will also be assigned to ships.	Part III Chapter 10 and Chapter 10A

Table I 1-8
List of Navigation Safety Notation

Notation	Description	Reference
NAV(1)	This notation will be assigned to ships when the requirements of navigation safety system in Chapters 2 and 3 of Part XIII of the Rules are complied with.	Part XIII Chapters 2 and 3
NAV0(1)	This notation will be assigned to ships when the requirements of navigation safety system in Chapters 2, 3, 4, 5, 6, 7, 9 and 10 of Part XIII of the Rules are complied with.	Part XIII Chapters 2, 3, 4, 5, 6, 7, 9 and 10
NAV1(1)	This notation will be assigned to ships when the requirements of navigation safety system in Chapters 2 to 10 of Part XIII of the Rules are complied with.	Part XIII Chapters 2 to 10

Note:

(1) Means notation, when assigned, to be added after the classification symbol **CMS**.

Table I 1-9
List of Refrigerated Cargo Installation Notation

Notation	Description	Reference
CA	This notation (**C**ontrolled **A**tmosphere) will be assigned together with applicable descriptive note when a refrigerated cargo ship is provided with a CA system to extend the life of fresh products and cargoes which will achieve and maintain specified ranges of oxygen and carbon dioxide levels or specified relative humidity in the cargo holds, and which are approved, installed and tested in accordance with the requirements in Chapter 6 of Part X of the Rules. It is a prerequisite that the refrigeration installation on board be assigned a **RMS** class symbol.	Part X Chapter 6
CRC	This notation (**C**arriage of **R**efrigerated **C**ontainers) will be assigned together with applicable descriptive note when a container ship has the ability to carry refrigerated containers stowed on deck as well as in a hold space, and is provided with the ventilation system and the electrical power supply which are approved, installed and tested in accordance with the requirements in Chapter 8 of Part X of the Rules. The classification symbol **RMS** is not necessarily required when **CRC** notation assigned.	Part X Chapter 8

Table I 1-10
List of Environmental Protection Notation

Notation	Description	Reference
POT	This notation (**P**rotection of Fuel and Lubricating **O**il **T**anks) will be assigned to ships having an aggregate fuel oil capacity of 600 m^3 and above with fuel oil and lubricating oil tanks arranged in accordance with the requirement specified in 6.5.3 of Part VI.	Part VI/6.5.3
PP	This notation (**P**ollution **P**revention) will be assigned to ships where the applicable requirements in Chapter 32 of Part II are complied with.	Part II Chapter 32
BWM	This notation (**B**allast **W**ater **M**anagement) will be assigned to ships where the applicable requirements in Chapter 32 of Part II are complied with.	Part II Chapter 32
EEDI	This notation (**E**nergy **E**fficiency **D**esign **I**ndex) will be assigned to ships where the applicable requirements in Chapter 32 of Part II are complied with.	Part II Chapter 32
SEEMP	This notation (**S**hip **E**nergy **E**fficiency **M**anagement **P**lan) will be assigned to ships where the applicable requirements in Chapter 32 of Part II are complied with.	Part II Chapter 32
SRE	This notation (**S**hip **Re**cycling) will be assigned to ships where the applicable requirements in Chapter 31 of Part II are complied with.	Part II Chapter 31
SRE-EU	This notation **SRE-EU** will be assigned to ships where the applicable requirements in Chapter 31 of Part II are complied with.	Part II Chapter 31
SCR(1)	This notation will be assigned to ships where the applicable requirements in the Guidelines for **S**elective **C**atalytic **R**eduction Systems are complied with.	Part IV/ 3.7.3(i)
SO_X Scrubber(1)	This notation will be assigned to ships where the applicable requirements in the Guidelines for **SOx Scrubber** Systems are complied with.	Part IV/ 3.7.3(i)
SO_X Scrubber Ready-N(1)	This notation, with **N** being **I**, **II** or **III**, will be assigned to ships where the applicable requirements in the Guidelines for SO_X Scrubber Systems are complied with.	Guidelines for SO_X Scrubber Systems
EGR(1)	This notation will be assigned to ships where the applicable requirements in the Guidelines for **E**xhaust **G**as **R**ecirculation Systems are complied with.	Part IV/ 3.7.3(i)

Notes:

(1) It means notation, when assigned, to be added after the classification symbol **CMS**.

Chapter 2

Survey Requirements of Steel Ship

2.1 General

2.1.1 General

(a) The Surveyor is to have free access at any time in order to examine a classed ship and to make sure of her good condition.

(b) When a survey becomes due or any damage or alterations which may affect the technical fitness or the class to the hull or machinery of the ship occurred, the owner or his representative is to apply in time for a survey to be made without waiting for notice from the Society. (See 1.6.10(a) and 1.6.11(b))

(c) In the case of any disagreement or dispute between the owner and the Surveyor or other officers regarding the inspection, examination and survey work, an appeal in writing for re-survey or explanation may be made to the Society.

(d) Though the survey of a certain part of the ship being surveyed is not included in this Chapter, the Surveyor may, if deemed necessary, make an additional survey of such a part. The Head Office of the Society also reserve the rights to perform an occasional survey whenever reasonable necessity exists.

(e) Modification of requirements

(i) At the periodical surveys, the Surveyor may modify the requirements for periodical surveys specified in this Chapter having regard to the size, service engaged, age, construction, results of last surveys and actual condition of the ship.

(ii) For spaces where effective coatings are found to be in a Good condition, the extent of internal examination or gauging requirements specified in this Chapter may be specially considered at the discretion of the Surveyor.

(f) The survey requirements to maintain a Class Notation for an additional system or service are contained in Chapter 3.

2.1.2 Definitions

(a) Ballast Tank

(i) Ballast Tank - All ships

A Ballast Tank is a tank which is used primarily for the carriage of salt water ballast.

(ii) Ballast Tank – Tankers ESP

A Ballast Tank is a tank which is used solely for the carriage of salt water ballast.

(iii) Ballast Tank – Bulk Carriers ESP

A Ballast Tank is a tank which is used solely for salt water ballast, or where applicable, a space which is used for both cargo and salt water ballast will be treated as a Ballast tank when substantial corrosion has been found in that space. A double side tank is to be considered as a separate tank even if it is in connection to either the topside tank or the hopper side tank.

(b) Spaces

Spaces are separate compartments including holds, tanks, cofferdams and void spaces bounding cargo holds, decks, and the outer hull.

(c) Overall Survey

An Overall Survey is a survey intended to report on the overall condition of the hull structure and determine the extent of additional close-up surveys.

(d) Close-up Survey

A Close-up Survey is a survey where the details of structural components are within the close visual inspection range of the Surveyor, i.e. normally within the reach of hand.

(e) Transverse Section

A Transverse Section includes all longitudinal members such as plating, longitudinals and girders at the deck, sides, bottom, inner bottom, hopper side plating, longitudinal bulkheads and bottom plating in top wing tanks. For transversely framed vessels, a transverse section includes adjacent frames and their end connections in way of transverse sections.

(f) Representative Tanks/Spaces

Representative tanks/spaces are those which are expected to reflect the condition of other tanks/spaces of similar type and service and with similar corrosion prevention systems. When selecting representative tanks/spaces account is to be taken of the service and repair history on board and identifiable Critical Structural Areas and/or Suspect Areas.

(g) Suspect Areas

Suspect areas are locations showing substantial corrosion and/or are considered by the Surveyor to be prone to rapid wastage.

(h) Critical Structural Areas

Critical structural areas are locations which have been identified from calculations to require monitoring or from the service history of the subject ship or from similar or sister ships (if available) to be sensitive to cracking, buckling or corrosion which would impair the structural integrity of the ship.

(i) Renewal Thickness

Renewal thickness (t_{ren}) is the minimum allowable thickness, in mm, below which renewal of structural members is to be carried out.

(j) Substantial Corrosion

Substantial Corrosion is an extent of corrosion such that assessment of corrosion pattern indicates a wastage in excess of 75% of allowable margins, but within acceptable limits.
For ships built under the IACS Common Structural Rules, substantial corrosion is an extent of corrosion such that the assessment of the corrosion pattern indicates a measured thickness between t_{ren} + 0.5 mm and t_{ren}.

(k) Corrosion Prevention System

A corrosion prevention system is normally considered as a full hard coating.

Hard Protective Coating is usually to be epoxy coatings or equivalent.

Other coating systems, which are neither soft nor semi-hard coatings, may be considered acceptable as alternatives, provided that they are applied and maintained in compliance with the manufacturers' specification.

(l) Coating Condition

Coating condition is defined as follows:

(i) GOOD is a condition with only minor spot rusting.

(ii) FAIR is a condition with local breakdown at edges of stiffeners and weld connections and/or light rusting over 20% or more of areas under consideration, but less than as defined for Poor condition.

(iii) POOR is a condition with general breakdown of coating over 20% or more of areas or hard scale at 10% or more of areas under consideration.

(m) Prompt and Thorough Repair

A prompt and Thorough repair is a permanent repair completed at the time of the survey to the satisfaction of the Surveyor, therein removing the need for the imposition of any associated condition of classification or recommendation.

(n) Special Consideration

Special consideration or specially considered (in connection with close-up surveys and thickness measurements) means sufficient close-up inspection and thickness measurements are to be taken to confirm the actual average condition of the structure under the coating.

(o) Air Pipe Head

Air pipe heads installed on the exposed decks are those extending above the freeboard deck or superstructure decks.

(p) General Dry Cargo Ships

"General dry cargo ships" are ships carrying solid cargoes other than: (see Note)

(i) bulk carriers (Double Skin or Non-Double Skin, subject to ESP);

(ii) dedicated container carriers;

(iii) dedicated forest product carriers (not timber or log carriers);

(iv) ro-ro cargo ships;

(v) refrigerated cargo ships;

(vi) dedicated wood chip carriers;

(vii) dedicated cement carriers;

(viii) livestock carriers;

(ix) deck cargo ship which is designed to carry cargo exclusively above deck without any access for cargo below deck; and

(x) general dry cargo ships of double side-skin construction, with double side-skin extending for the entire length of the cargo area, and for the entire height of the cargo hold to the upper deck

Note: At Annual Survey and Special Survey, an examination and a test to the water ingress detection system and their alarms also apply to those cargo ships, which, although belonging to the ship types listed herein that are excluded from the application of IACS UR, are fitted with a single cargo hold.

(q) Tanker

A tanker is a ship which is constructed primarily to carry liquid cargo in bulk. Oil Tankers, Chemical Tankers and Liquefied Gas Carriers are included in this category.

(i) Oil Tanker (OT)

An oil tanker is a ship, which is constructed primarily to carry oil in bulk and includes ship types such as combination carriers (ore/oil and ore/bulk/oil ships, etc).

(ii) Double Hull Oil Tanker (DHOT)

A double hull oil tanker is a ship which is constructed primarily for the carriage of oil in bulk, which has the cargo tanks protected by a double hull which extends for the entire length of the cargo area, consisting of double sides and double bottom spaces for the carriage of water ballast or void spaces.

(iii) Chemical Tanker (CT)

A chemical tanker is a ship constructed or adapted and used for the carriage in bulk of any liquid product listed in Chapter 17 of the IBC Code.

(iv) Liquefied Gas Carrier (LGC)

A liquefied gas carrier is a ship constructed or adapted and used for the carriage in bulk of any liquefied gas or other products listed in either "the IGC Code" or "the GC Code".

(r) Bulk Carrier (BC)

(i) A bulk carrier is a ship which is constructed generally with single deck, double bottom, topside tanks and hopper side tanks in cargo spaces, and is intended primarily to carry dry cargo in bulk. It includes a vessel of such type as ore carrier or Combination carriers. Ore and combination carriers are not covered by the IACS Common Structural Rules.

(ii) A double skin bulk carrier is a ship which is constructed generally with single deck, double bottom, hopper side tanks and topside tanks in cargo spaces, and is intended primarily to carry dry cargo in bulk, including such type as ore carrier or combination carrier, in which all cargo holds are bounded

by a double-side skin (regardless of the width of the wing space). Ore and combination carriers are not covered by the IACS Common Structural Rules.

(s) Cargo Area (Tanker) or Cargo Length Area (all ships)

Cargo Area is that part of the ship that contains cargo tanks, slop tanks and cargo/ballast pump rooms, cofferdams, ballast tanks and void spaces adjacent to cargo tanks and also deck areas throughout the entire length and breadth of the part of the ship over the mentioned spaces.

Cargo Length Area is that part of the ship that contains cargo holds and adjacent areas including cofferdams, ballast tanks, fuel tanks and void spaces.

(t) Combined Cargo/ Ballast Tank – Oil Tanker and Chemical Tanker

A combined cargo/ ballast tank is a tank which is used for the carriage of cargo or ballast water as a routine part of the vessel's operation and will be treated as a ballast tank. Cargo tank in which water ballast might be carried only in exceptional cases as per MARPOL I/18(3) are to be treated as cargo tank.

(u) Panel

Panel is the area between adjacent transverse frames from longitudinal stiffener to longitudinal stiffener.

(v) Wind and Water Strakes

Wind and water strakes are the strakes of a ship's side shell plating between the ballast and deepest load waterline.

(w) Oil

Oil is petroleum in any form including crude oil, fuel oil, sludge, oil refuse, and refined products other than petrochemicals which are subject to the provisions of Annex II of the MARPOL 73/78.

(x) Bay

Bay is the area between adjacent transverse frames from longitudinal bulkhead to longitudinal bulkhead (or side shell).

(y) Remote Inspection Techniques (RIT)

Remote Inspection Techniques is a means of survey that enables examination of any part of the structure without the need for direct physical access of the Surveyor.

(z) Pitting Corrosion, Edge corrosion and Grooving corrosion

(i) Pitting corrosion is defined as scattered corrosion spots/areas with local material reductions which are greater than the general corrosion in the surrounding area. Pitting intensity is defined as shown below:

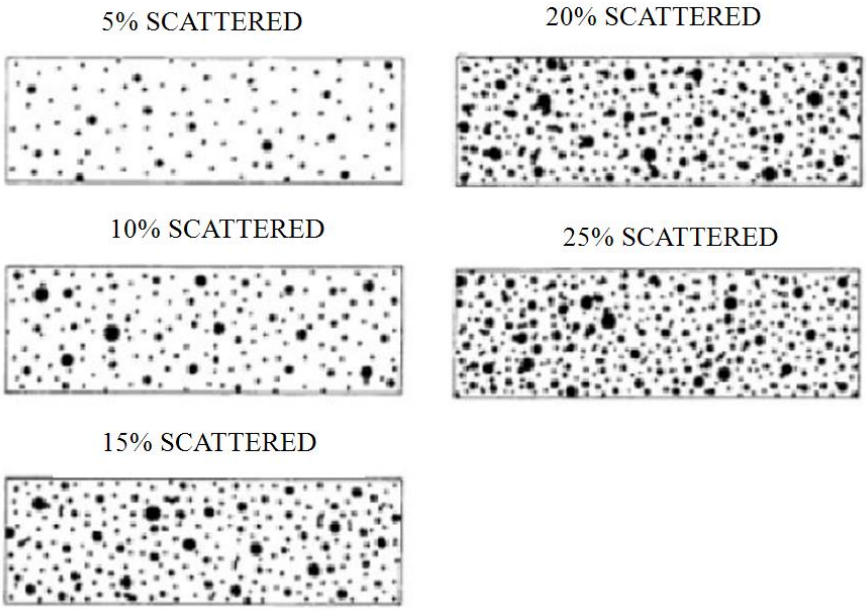

(ii) Edge corrosion is defined as local corrosion at the free edges of plates, stiffeners, primary support members and around openings as shown below

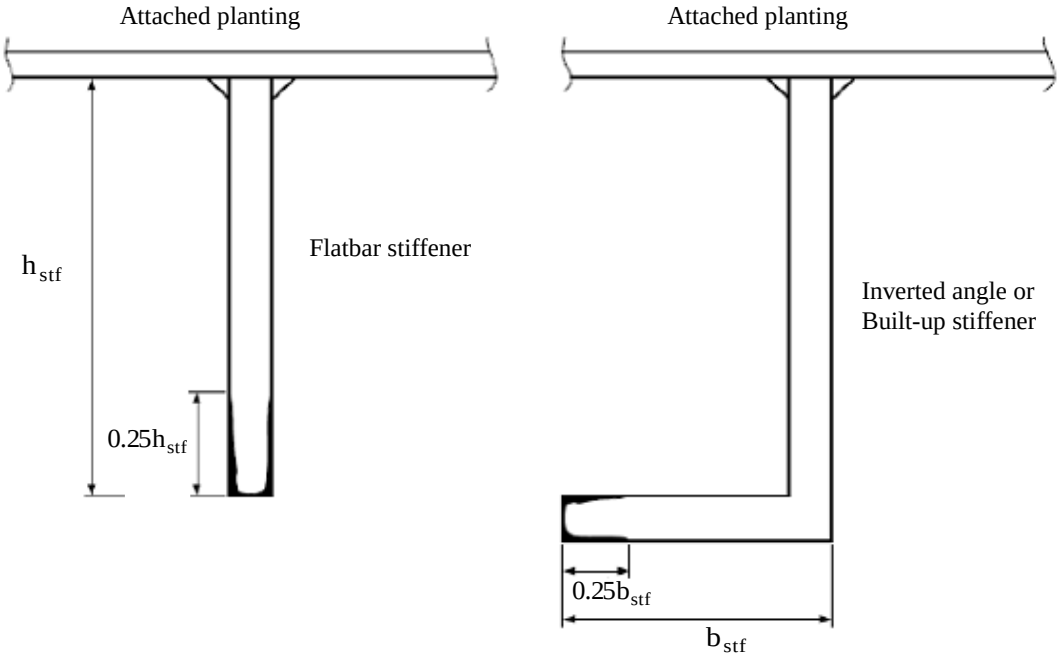

(iii) Grooving corrosion is typically local material loss adjacent to weld joints along abutting stiffeners and at stiffener or plate butts or seams. An example of groove corrosion is shown below:

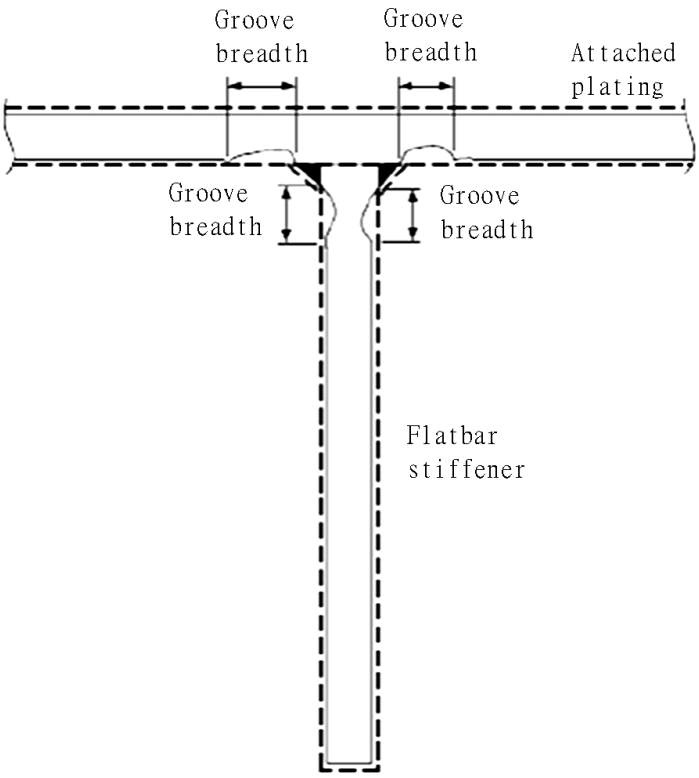

2.1.3 Repairs

(a) Any damage in association with wastage over the allowable limits (including buckling, grooving, detachment or fracture), or extensive areas of wastage over the allowable limits, which affects or, in the opinion of the Surveyor, will affect the ship's structural, watertight or weathertight integrity, is to be promptly and thoroughly (see 2.1.2 (m)) repaired. Area to be considered include:

(i) side shell frames, their end attachments and adjacent shell plating;

(ii) deck structure and deck plating;

(iii) bottom structure and bottom plating;

(iv) watertight or oiltight bulkheads;

(v) hatch covers and hatch coamings;

(vi) the weld connection between air pipes and deck plating;

(vii) all air pipe heads installed on the exposed decks;

(viii) ventilators, including closing devices, if any.

For locations where adequate repair facilities are not available, consideration may be given to allow the vessel to proceed directly to a repair facility. This may require discharging the cargo and/or temporary repairs for the intended voyage.

(b) Additionally, when a survey results in the identification of structural defects or corrosion, either of which, in the opinion of the Surveyor, will impair the vessel's fitness for continued service, remedial measures are to be implemented before the ship continues in service.

(c) Where the damage found on structure mentioned in 2.1.3(a) is isolated and of a localised nature which does not affect the ship's structural integrity, consideration may be given by the Surveyor to allow an appropriate temporary repair to restore watertight or weathertight integrity and impose a Recommendation/Condition of Class in accordance with IACS PR 35, with a specific time limits.

2.1.4 Procedures for class related services

(a) Thickness measurements and close-up surveys - hull structures

(i) Thickness measurements are to be carried out by a firm approved by the Society in accordance with the procedures for certification of firms engaged in thickness measurement of hull structures as specified in "Guidelines for Approval of Service Suppliers" of the Society, except that in respect of measurements of non-ESP ships less than 500 gross tonnage and all fishing vessels, the firm need not be so approved.

(ii) Thickness measurement is normally to be carried out under the supervision of the Surveyor. However, the Surveyor may accept thickness measurement not carried out under his supervision, in which case provisions is to be made for the Surveyor to recheck the measurements as deemed necessary to ensure acceptable accuracy.

(iii) A thickness measurement report is to be prepared by the approved firm carrying out the thickness measurement, the thickness measured as well as the corresponding original thickness. The report is to give the date when the measurement was carried out, the type of measuring equipment, names of personnel and their qualifications and is to be signed by the operator and the Surveyor.

(iv) The thickness measurement report is to be verified by the Surveyor.

(v) Additional ESP requirements for bulk carriers and oil Tankers, including combinations carriers.

(1) The required thickness measurements, if not carried out by the Society, are to be witnessed by the Surveyor. The Surveyor is to be on board to the extent necessary to control the process.

(2) The thickness measurement firm is to be part of the survey planning meeting to be held prior to commencing the survey.

(3) In all cases the extent of the thickness measurements is to be sufficient as to represent the actual average condition.

(vi) In any kind of survey, i.e. Special, Intermediate, Annual or other surveys having the scope mentioned in 1.6.4, 1.6.5 and 1.6.6, thickness measurements of structures in areas where close-up surveys are required, shall be carried out simultaneously with close-up surveys.

(vii) Consideration may be given by the attending Surveyor to allow use of Remote Inspection Techniques (RIT) as an alternative to close-up survey. Surveys conducted using a RIT are to completed to the satisfaction of the attending Surveyor. When RIT is used for a close-up survey, temporary means of access for the corresponding thickness measurements is to be provided unless such RIT also able to carry out the required thickness measurements.

(viii) For structure built with a material other than steel, alternative thickness measurement requirements may be developed and applied as deemed necessary by the Society.

(ix) Thickness Measurements Acceptance Criteria.

The Acceptance Criteria for thickness measurements are according to Appendix 4 and/or specific IACS URs depending on ship age and structural elements concerned, e.g URs S18 for corrugated transverse bulkhead, URs S21A for all hatch covers and coamings on exposed decks.

(x) Remote Inspection Techniques (RIT)

(1) The RIT is to provide the information normally obtained from a close-up survey. RIT surveys are to be carried out in accordance with the requirements given here-in and the requirements of IACS Recommendation 42 "Guidelines for use of Remote Inspection Techniques for surveys". These considerations are to be included in the proposals for use of a RIT which are to be submitted in advance of the survey so that satisfactory arrangements can be agreed with the Society.

(2) The equipment and procedure for observing and reporting the survey using a RIT are to be discussed and agreed with the parties involved prior to the RIT survry, and suitable time is to be allowed to set-up, calibrate and test all equipment beforehand.

(3) When using a RIT as an alternative to close-up survey, if it is not carried out by the Society itself, it is to be conducted by a firm approved as a service supplier according to UR Z17 and is to be witnessed by an attending Surveyor of the Society.

(4) The structure to be examined using a RIT is to be sufficiently clean to permit meaningful examination. Visibility is to be sufficient to allow for a meaningful examination. The Society is to be satisfied with the methods of orientation on the structure.

(5) The Surveyor is to be satisfied with the method of data presentation including pictorial represetation, and a good two-way communication between the Surveyor and RIT operator is to be provided.

(6) If the RIT reveals damage or deteriotation that requires attention, the Surveyor may require traditional survey to be undertaken without use of a RIT.

(b) In-Water Surveys

(i) The In-Water Survey is to be carried out under the surveillance of the Surveyor by an In-Water Survey firm approved by the Society according to CR "Guidelines for Approval of Service Suppliers", by diver or Remotely Operated Vehicle (ROV).

(ii) The Society's approval is to be granted to the firms whose organization and management structure are satisfactorily established, which employ the divers using closed-circuit television with two-way communication or operators using Remotely Operated Vehicle (ROV) for the In-Water Survey work and which have sufficient equipment proved suitable for the work undertaken.

(iii) The continued approval of the firm is to depend on its original standards and ability being maintained. Any changes in the information originally supplied are to be reported to the Society; however, the approval is to be renewed after a period not exceeding 5 years.

2.1.5 Provision for surveys

(a) Conditions for survey

(i) The owner is to provide the necessary facilities for a safe execution of the survey.

(ii) Tanks and spaces are to be safe for access, i.e. gas freed, ventilated, and illuminated.

(iii) Tanks and spaces are to be sufficiently clean and free from water, scale, dirt, oil residues, etc. to reveal corrosion, deformation, fractures, damages or other structural deterioration. In particular, this applies to areas which are subject to thickness measurement.

(iv) Sufficient illumination is to be provided to reveal corrosion, deformation, fractures, damages or other structural deterioration.

(b) Access to structures

(i) For survey, means are to be provided to enable the Surveyor to examine the hull structure in a safe and practical way.

(ii) For survey in cargo holds and water ballast tanks, one or more of the following means for access, acceptable to the Surveyor, is to be provided.

(1) Permanent staging and passages through structures.

(2) Temporary staging and passages through structures.

(3) Hydraulic arm vehicles such as conventional cherry pickers, lifts and moveable platforms.

(4) Boats or rafts.

(5) Other equivalent means.

(iii) For Surveys conducted by use of a Remote Inspection Technique (RIT), one or more of the following means for access, acceptable to the Surveyor, is to be provided:

(1) Unmanned robot arm

(2) Remotely Operated Vehicles (ROV)

(3) Unmanned Aerial Vehicles / Drones

(4) Other means acceptable to the Society.

(c) Equipment for survey

(i) Thickness measurement is normally to be carried out by means of ultrasonic test equipment. The accuracy of the equipment is to be proven to the Surveyor as required.

(ii) One or more of the following fracture detection procedures may be required if deemed necessary by the Surveyor:

(1) Radiographic equipment.

(2) Ultrasonic equipment.

(3) Magnetic particle equipment.

(4) Dye penetrate.

(iii) Rescue and emergency response equipment (for ESP ships)

If breathing apparatus and/or other equipment is used as "Rescue and emergency response equipment" then it is recommended that the equipment should be suitable for the configuration of the space being surveyed.

(d) Surveys at sea or at anchorage

(i) Surveys at sea or at anchorage may be accepted provided the Surveyor is given the necessary assistance from the personnel on board. Necessary precautions and procedures for carrying out the survey are to be in accordance with 2.1.5(a), (b) and (c) above.

(ii) A communication system is to be arranged between the survey party in the tank and the responsible officer on deck. This system is also to include the personnel in charge of ballast pump handling if boats or rafts are used.

(iii) Explosimeter, oxygen-meter, breathing apparatus, life-line and whistles are to be at hand during the survey.

(iv) When boats or rafts are used appropriate life jackets are to be available for all participants. Boats or rafts are to have satisfactory residual buoyancy and stability even if one chamber is ruptured. A safety check-list is to be provided.

(v) Surveys of tanks by means of boats or rafts may only be undertaken at the sole discretion of the Surveyor, who is to take into account the safety arrangements provided, including weather forecasting and ship response in reasonable sea conditions.

2.1.6 Preparation for enhanced survey for ESP ships

The regime of enhanced surveys given in 2.11, 2.12, 2.13, 2.14 and 2.15 of this Chapter as appropriate, are applicable to a number of ship types falling within the broad definitions of oil tankers, chemical tankers and bulk carriers contained in the Rules.

(a) Survey Programme

(i) The Owner in cooperation with the Society is to work out a specific Survey Programme prior to the commencement of any part of:

- the Special Survey
- the Intermediate Survey for ships over 10 years of age

The Survey Programme is to be in a written format based on the information in IACS UR-Z10.1 Annex IVA (for oil tanker), Z10.2 Annex VIA (for bulk carrier) and Z10.3 Annex IIIA(for chemical tanker).

The survey is not to commence until the Survey Programme has been agreed.

(1) Prior to the development of the Survey Programme, the survey planning questionnaire is to be completed by the owner based on the information set out in IACS UR-Z10.1 Annex IVB, Z10.2 Annex VIB and Z10.3 Annex IIIB and forwarded to the Society.

(2) The Survey Programme at Intermediate Survey may consist of the Survey Programme at the previous Special Survey supplemented by the Executive Hull Summary of that Special Survey and later relevant survey reports.

The Survey Programme is to be worked out taking into account any amendments to the survey requirements after the last Special Survey carried out.

(ii) In developing the Survey Programme, the following documentation is to be collected and consulted with a view to selecting tanks, holds, areas, and structural elements to be examined.

(1) Survey status and basic ship information;

(2) Documentation on-board as described in 2.1.6(c)(ii) and 2.1.6(c)(iii);

(3) Main structural plans (scantlings drawings), including information regarding use of high tensile steels(HTS);

(4) Documentation for oil tanker and chemical tanker

a) Executive Hull Summary;

b) Relevant previous damage and repair history;

c) Relevant previous survey and inspection reports from both the Society and the Owner;

d) Cargo and ballast history for the last 3 years, including carriage of cargo under heated conditions;

e) Details of the inert gas plant and tank cleaning procedures;

f) Information and other relevant data regarding conversion or modification of the ship's cargo and ballast tanks since the time of construction;

g) Description and history of the coating and corrosion protection system (including previous class notations), if any;

h) Inspections by the Owner's personnel during the last 3 years with reference to structural deterioration in general, leakages in tank boundaries and piping and condition of the coating and corrosion protection system if any. Guidance for reporting is shown in IACS-UR Z10.1 Table V (for Oil Tanker) and Z10.3 Annex IIIC (for Chemical Tanker);

i) Information regarding the relevant maintenance level during operation including port state control reports of inspection containing hull related deficiencies, Safety Management System non-conformities relating to hull maintenance, including the associated corrective action(s); and

j) Any other information that will help identify suspect areas and critical structural areas;

(5) Documentation for bulk carrier

a) Relevant previous survey and inspection reports from both the Society and the Owner;

b) Information regarding the use of the ship's holds and tanks, typical cargoes and other relevant data;

c) Information regarding corrosion protection level on the newbuilding; and

d) Information regarding the relevant maintenance level during operation.

(iii) The submitted Survey Programme is to account for and comply, as a minimum, with the requirements for close-up survey, thickness measurement and tank testing, respectively, and is to include relevant information including at least:

(1) Basic ship information and particulars;

(2) Main structure plans (scantling drawings), including information regarding use of high tensile steels (HTS);

(3) Plan of holds and tanks;

(4) List of holds and tanks with information on their use, protection and condition of coating;

(5) Conditions for survey (e.g., information regarding hold/tank cleaning, gas freeing, ventilation, lighting, etc.);

(6) Provisions and methods for access to structures;

(7) Equipment for surveys;

(8) Nomination of holds and tanks and areas for close-up survey;

(9) Nomination of sections and structures for thickness measurement;

(10) Nomination of tanks for tank testing; and the pipes that are to undergo pipe testing for chemical tanker;

(11) Nominations of the thickness measurement firm;

(12) Damage experience related to the ship in question; and

(13) Critical structural areas and suspect areas, where relevant.

(iv) The Society will advise the Owner of the maximum acceptable structural corrosion diminution levels applicable to the ships.

(b) Survey planning meeting

(i) Proper preparation and close co-operation between the attending Surveyor(s) and the owner's representatives onboard prior to and during the survey are an essential part in the safe and efficient conduct of the survey. During the survey on board safety meetings are to be held regularly.

(ii) Prior to commencement of any part of the Special and Intermediate Survey, a survey planning meeting should be held between the attending Surveyor(s), the owner's representative in attendance, the thickness measurement firm operator (as applicable) and the master of the ship or an appropriately qualified representative appointed by the master or firm for the purpose to ascertain that all the arrangements envisaged in the Survey Program are in place, so as to ensure the safe and efficient conduct of the survey work to be carried out. See also 2.1.4(a)(v)(2).

(iii) The following is an indicative list of items that are to be addressed in the meeting:

(1) Schedule of the ship (i.e. the voyage, docking and undocking manoeuvres, periods alongside, cargo and ballast operations, etc.);

(2) Provisions and arrangements for thickness measurements (i.e. access, cleaning/de-scaling, illumination, ventilation, personal safety);

(3) Extent of the thickness measurements;

(4) Acceptance criteria (refer to the list of minimum thicknesses);

(5) Extent of close-up survey and thickness measurement considering the coating condition and suspect areas/areas of substantial corrosion;

(6) Execution of thickness measurements;

(7) Taking representative readings in general and where uneven corrosion/pitting is found;

(8) Mapping of areas of substantial corrosion;

(9) Communication between attending Surveyor(s) the thickness measurement company firm operator(s) and owner representative(s) concerning findings.

(c) Documentation on board

(i) General

(1) The Owner is to supply and maintain onboard documentation as specified in (ii) and (iii) of this subparagraph, which are to be readily available for the Surveyor.

(2) The documentation is to be kept on board for the life time of the ship.

(ii) Survey report file

(1) A survey report file is to be a part of the documentation on board consisting of:

a) report of structural surveys.

b) condition evaluation report.

c) thickness measurement report.

(2) The survey report file is to be available also in the Owner's and the Society's offices.

(iii) Supporting documents

The following additional documentation is to be available on board:

(1) Main structural plans of cargo tanks/holds and ballast tanks.

(2) Previous repair history.

(3) Cargo and ballast history.

(4) Extent of use of inert gas plant and tank cleaning procedures (for tankers only).

(5) Inspections by ship's personnel with reference to:

a) Structural deterioration in general;

b) Leakage in bulkheads and piping;

c) Condition of coating or corrosion prevention system, if any.

(6) A guidance for reporting;

(7) Any other information that will help identify Suspect Areas requiring inspection,

(8) Any other information that will help to identify critical structural areas and/or Suspect Areas requiring inspection.

(iv) Review of documentation on board

Prior to inspection, the Surveyor is to examine the completeness of the documentation on board, and its contents as a basis for the survey.

(d) Reporting of evaluation of survey

(i) Evaluation of survey report

(1) The data and information on the structural condition of the ship collected during the survey are to be evaluated for acceptability and continued structural integrity of the ship.

(2) The analysis of data is to be carried out and endorsed by the Society and the conclusions of the analysis are to form a part of the condition evaluation report.

(3) The final result of evaluation of the ship's longitudinal strength required as 2.1.6(f) or 2.1.6(g) below, after renewal or reinforcement work of structural members, if carried out as a result of initial evaluation, is to be reported as a part of the Executive Hull Summary.

(ii) Reporting

A condition evaluation report of the survey and results is to be issued to the Owner and placed on board the ship for reference at future surveys. The condition evaluation report is to be endorsed by the Society.

(e) Technical assessment in conjunction with the planning of enhanced surveys for oil tankers

(i) As with other aspects of survey planning, the technical assessments described below are to be completed out by the Owner or operator in cooperation with the Society well in advance of the commencement of the Special Survey, i.e., prior to commencing the survey and normally at least 12 to 15 months before the survey's completion due date.

(ii) Technical assessments of the relative risks of susceptibility to damage or deterioration of various structural elements and areas are to be judged and decided. Technical assessments, which may include quantitative or qualitative evaluation of relative risks of possible deterioration, of the following aspects of a particular ship may be used as a basis for the nomination of tanks and areas for survey:

(1) design features such as stress levels on various structural elements, design details and extent of use of high tensile steel;

(2) former history with respect to corrosion, cracking, buckling, indents and repairs for the particular ship as well as similar ships, where available; and

(3) information with respect to types of cargo carried, use of different tanks for cargo/ballast, protection of tanks and condition of coating, if any.

(iii) There are three basic types of possible failure which may be the subject of technical assessment in connection with planning of surveys; corrosion, cracks and buckling. Contact damages are not normally covered by the survey programme since indents are usually noted in memoranda and assumed to be dealt with as a normal routine by Surveyors. Technical assessments performed in conjunction with the survey programme process are, in principle to be as shown schematically in Fig. I 2-1. The approach is basically an evaluation of the risk based on the knowledge and experience related to design and corrosion. The design is to be considered with respect to structural details which may be susceptible to buckling or cracking as a result of vibration, high stress levels or fatigue. Corrosion is related to the ageing process, and is closely connected with the quality of corrosion protection at newbuilding, and subsequent maintenance during the service life. Corrosion may also lead to cracking and/or buckling.

(iv) Damage experience related to the ship in question and similar ships, where available, is the main source of information to be used in the process of planning. In addition, a selection of structural details from the design drawings is to be included. Typical damage experience to be considered will consist of:

(1) number, extent, location and frequency of cracks; and

(2) location of buckles.

This information may be found in the survey reports and/or the Owner's files, including the results of the Owner's own inspections. The defects are to be analyzed, noted and marked on sketches. The review of the main structural drawings, is to include checking for typical design details where cracking has been experienced. The factors contributing to damage are to be carefully considered. The use of high tensile steel (HTS) is an important factor. Details showing good service experience where ordinary, mild steel has been used may be more susceptible to damage when HTS, and its higher associated stresses, are utilized. There is extensive and, in general, good experience, with the use of HTS for longitudinal material in deck and bottom structures. Experience in other locations, where the dynamic stresses may be higher, is less favorable, e.g. side structures. In this respect, stress calculations of typical and important components and details, in accordance with relevant methods, may prove useful and are to be considered. The selected areas of the structure identified during this process are to be recorded and marked on the structural drawings to be included in the survey plan.

(v) In order to evaluate relative corrosion risks, the following information is generally to be considered:

(1) Usage of tanks and spaces;

(2) Condition of coatings;

(3) Condition of anodes;

(4) Cleaning procedures;

(5) Previous corrosion damage;

(6) Ballast use and time for cargo tanks;

(7) Corrosion risk scheme; and

(8) Location of heated tanks.

The evaluation of corrosion risks is to be based on the age of the ship and relevant information on the anticipated condition as derived from the information collected in order to prepare the survey programme. The various tanks and spaces are to be listed with the corrosion risks nominated accordingly.

(vi) On the basis of the table of corrosion risks and the evaluation of design experience, the locations of initial close-up survey and thickness measurement (sections) may be nominated. The sections subject to thickness measurement one normally to be nominated in tanks and spaces where corrosion risk is judged to be the highest. The nomination of tanks and spaces for close-up survey initially, to be based on highest corrosion risk, and is always to include ballast tanks. The principle for the selection is to be that the extent is increased by age or where information is insufficient or unreliable.

(f) Evaluation of longitudinal strength of hull girder for oil tankers of 130 m in length and upwards and of over 10 years of age for survey report

(i) Evaluation of longitudinal strength

The longitudinal strength of the ship's hull girder is to be evaluated on the basis of the thickness measured, renewed or reinforced, as appropriate, during the Special Survey.

The condition of the hull girder for longitudinal strength evalution is to be determined in accordance with the methods specified in IACS Z10.1 Annex III-appendix 3.

(ii) Transverse sectional areas of deck flange (deck plating and deck longitudinals) and bottom flange (bottom shell plating and bottom longitudinals) of the ship's hull girder are to be calculated by using the thickness measured, renewed or reinforced, as appropriate, during the Special Survey.

(iii) If the diminution of sectional areas of either deck or bottom flange exceeds 10% of their respective as-built area (i.e. original sectional area when the ship was built), either one of the following measures is to be taken:

(1) the ship is to be taken to renew or reinforce the deck or bottom flanges so that the actual sectional area is not less than 90% of the as-built area; or

(2) to calculate the actual section moduli (Z_{act}) of transverse section of the ship's hull girder by applying the calculation method specified in 3.2.5 of Part II, by using the thickness measured, renewed or reinforced, as appropriate, during the Special Survey.

(iv) for ships constructed on or after 1 July 2002, the actual section moduli (Z_{act}) of the transverse section of the ship's hull girder calculated in accordance with 2.1.6(f)(iii)(2) above is to be not less than the diminution limits determined by the Society (Note: The Z_{act} is not to be less than 90% of the required

section modulus for new buildings, whichever is the greater. c = 1.0 C_n is to be used for the purpose of this calculation.),or

(v) for ships constructed before 1 July 2002, the actual section moduli (Z_{act}) of the transverse section of the ship's hull girder calculated in accordance with 2.1.6(f)(iii)(2) above is to meet the criteria for minimum section modulus for ships in service required by the Society, provided that in no case Z_{act} is to be less than the diminution limit of the minimum section modulus (Z_{mc}) as specified below:

(1) The diminution limit of the minimum section modulus (Z_{mc}) of oil tankers in service is given by the following formula:

$$Z_{mc} = cL^2B\,(C_b + 0.7)\,k \ \ cm^3$$

where

L = Length of ships. L is the distance, in meters, on the summer load waterline from the fore side of stem to the after side of the rudderpost, or the center of the rudderstock if there is no rudderpost. L is not to be less than 96%, and need not be greater than 97%, of the extreme length on the summer load waterline. In ships with unusual stern and bow arrangement, the length L may be specially considered.

B = Greatest moulded breadth in metres.

C_b = Moulded block coefficient at draught d, corresponding to summer load waterline, based on L and B. C_b is not to be taken less than 0.60, and

c = 0.9 C_n

C_n = $10.75 - \left(\frac{300 - L}{100}\right)^{1.5}$ for 130 m ≤ L ≤ 300 m

= 10.75 for 300 m < L < 350 m

= $10.75 - \left(\frac{L - 350}{150}\right)^{1.5}$ for 350 m ≤ L ≤ 500 m

k = Material factor, e.g.

k = 1.0 for mild steel with yield stress of 235 N/mm^2 and over,

k = 0.78 for high tensile steel with yield stress of 315 N/mm^2 and over,

k = 0.72 for high tensile steel with yield stress of 355 N/mm^2 and over.

(2) Scantlings of all continuous longitudinal members of the ship's hull girder based on the section modulus requirement in (1) above are to be maintained within 0.4L amidships. However, in special cases, based on consideration of type of ship, hull form and loading conditions, the scantlings may be gradually reduced towards the end of 0.4L part, bearing in mind the desire not to inhibit the ship's loading flexibility.

(3) However, the above standard may not be applicable to ships of unusual type or design, e.g. for ships of unusual main proportions and/or weight distributions.

(vi) For CSR double hull oil tanker, the ship's longitudinal strength is to be evaluated by using the thickness of structural members measured, renewed and reinforced, as appropriate, during the Special Surveys carried out after the ship reached 10 years of age (or during the Special Survey No. 2, if this is carried out before the ship reaches 10 years of age) in accordance with the criteria for longitudinal strength of the ship's hull girder specified in Section 12 of IACS Common Structural Rules for Double Hull Oil Tanker or Part 1, Ch 13 of IACS Common Structural Rules for Bulk Carriers and Oil Tankers.

(g) For CSR bulk carriers, the ship's longitudinal strength is to be evaluated by using the thickness of structural members measured, renewed and reinforced, as appropriate, during the Special Surveys carried out after the ship reached 15 years of age (or during the Special Survey No. 3, if this is carried out before the ship reaches 15 years) in accordance with the criteria for longitudinal strength of the ship's hull girder for CSR bulk carriers specified in Ch 13 of IACS Common Structural Rules for Bulk Carriers or Part 1, Ch 13 of IACS Common Structural Rules for Bulk Carriers and Oil Tankers.

2.2 Bottom Surveys

2.2.1 Bottom Surveys in dry dock

At each Bottom Survey in dry dock the following requirements are to be complied with:

(a) Normally the ship is to be placed on blocks of sufficient height in a dry dock or on a slipway and cleaned, and proper staging is to be erected as may be necessary for examination. A docking survey covers an examination of elements such as shell plating including bottom and bow plating, stern frame and rudder, sea chests and vlaves, propellers, etc. The shell plating is to be examined for excessive corrosion, or deterioration due to chafing or contact with the ground and for any undue unfairness or buckling. Special attention is to be paid to the connection between the bilge strakes and the bilge keels. Important plate unfairness or other deterioration which do not necessitate immediate repairs are to be recorded.

(b) Sea chests and their gratings, sea connections and overboard discharge valves and cocks and their fastenings to the hull or sea chests are to be examined. Valves and cocks need not be opened up more than once in a Special Survey period unless considered necessary by the Surveyor.

(c) Visible parts of rudder, rudder pintles, rudder shafts and couplings, stern frame, gudgeons, etc. are to be examined. If considered necessary by the Surveyor, the rudder is to be lifted or the inspection plates removed for the examination of pintles. The clearance in the rudder bearing is to be ascertained and recorded. Where applicable, pressure test of the rudder may be required as deemed necessary by the Surveyor.

(d) Visible parts of propeller and stern bush, are to be examined. The clearance in the stern bush and the efficiency of the oil gland, if fitted, are to be ascertained and recorded. For controllable pitch propellers, the Surveyor is to be satisfied with the fastenings and tightness of hub and blade sealing. Dismantling need not to be carried out unless considered necessary by the Surveyor.

Survey in place for the propeller shaft and stern tube shaft is to be carried out as per requirement of 2.3.6.

(e) Visible parts of side thrusters are to be examined. Other propulsion systems which also have manoeuvring characteristics (such as directional propellers, vertical axis propellers, water jet units) are to be examined externally with focus on the condition of gear housing, propeller blades, bolt locking and other fastening arrangements. Sealing arrangement of propeller blades, propeller shaft and steering column shall be verified. Dismantling may be required to the extent found necessary by the Surveyor.

(f) Anchor and anchor chains are to be arranged and examined. Chain lockers are to be internally examined. The diameter of anchor chain cables is to be measured at Special Survey No. 2 and subsequent Special Survey.

(g) Special consideration may be given in application of relevant requirements of this section to commercial ships owned or chartered by Governments, which are utilized in support of military operations or service.

(h) For maintenance of the **IWS** notation, a ship's markings and equipment installed for In-Water Survey are to be satisfactorily verified by the attending Surveyor at each Drydocking.

(i) For Mobile Offshore Unit

(i) Parts to be examined

(1) Surface-type Units (ship or barge type units)
External surfaces of the hull, keel, stem, stern frame, rudder, nozzles, and sea strainers are to be selectively cleaned to the satisfaction of the attending Surveyor and examined together with appendages, the propeller, exposed parts of stern bearing assembly, rudder pintle and gudgeon securing arrangements, sea chest and strainers, and their fastenings.
Propeller shaft bearing, rudder bearing, and steering nozzle clearances are to be ascertained and recorded.

(2) Self-Elevating Units
External surfaces of the upper hull or platform, spud cans, mat, underwater areas of legs, together with their connections as applicable, are to be selectively cleaned to the satisfaction of the attending Surveyor and examined.

At each Drydocking Survey or equivalent, after Special Survey No. 2, the Surveyor is to be satisfied with the condition of the internal structure of the mat or spud cans. Leg connections to mat and spud cans are to be examined at each Drydock Survey or equivalent. Non-destructive testing may be required of areas considered to be critical by the Society or found to be suspect by the Surveyor.

(3) Column-Stabilized Units
External surfaces of the upper hull or platform, footings, pontoons or lower hulls, underwater areas of columns, bracing and their connections, sea chests, and propulsion units as applicable, are to be selectively cleaned and examined to the satisfaction of the attending Surveyor. Non-destructive testing may be required of areas considered to be critical by the Society or found to be suspect by the Surveyor.

(ii) Ballast Spaces

In conjunction with Drydocking Surveys (or equivalent) after Special Survey No. 1 and between subsequent Special Surveys, the following ballast spaces are to be internally examined, thickness gauged, placed in satisfactory condition as found necessary, and reported upon. If such examination reveals no visible structural defects, the examination may be limited to a verification that the corrosion prevention arrangements remain effective.

(1) All Units
Particular attention is to be given to corrosion prevention systems in ballast spaces, free- flooding areas and other locations subjected to sea water from both sides.

(2) Surface type units
One peak tank and at least two other representative ballast tanks between the peak bulkheads used primarily for water ballast.

(3) Self elevating units
Representative ballast tanks or free-flooding compartments in mat or spud cans, if accessible, and at least two representative hull pre-load tanks.

(4) Column stabilized units
Representative ballast tanks in footings, lower hulls, or free-flooding compartments as accessible, and at least two ballast tanks in columns or upper hull, if applicable.

2.2.2 In-Water Survey with notation **IWS**

An In-Water Survey may normally be carried out if the ship has been granted the additional class notation **IWS**. Upon application by the Owner, the Society may also consider to accept such In-Water Survey for ships not assigned with the additional class notation **IWS**.

(a) General requirements

(i) The underwater body is to be protected against corrosion by a full hard coating system and strongly recommended to be also protected by an impress current cathodic protection system.

(ii) The information obtained from the In-Water survey is to be as reliable as that obtained from the docking survey.

(iii) The In-Water Survey is to provide the information normally obtained from a docking survey. Special consideration shall be given to ascertaining rudder bearing clearances and stern bush clearances of oil stern bearings based on a review of the operating history, on board testing and stern oil sample reports. These considerations are to be included in the proposals for In-Water Survey which are to be submitted in advance of the survey so that satisfactory arrangements can be agreed with the Society.

(iv) Application for the subsequent in-water survey is also to be submitted to the Society for acceptance.

(v) The In-Water Survey is to be carried out with the ship in sheltered water and preferably with weak tidal streams and currents. The in-water visibility and the cleanliness of the hull below the waterline is to be clear enough to permit a meaningful examination which allows the Surveyor and the In-Water Survey firm to determine the condition of the plating, appendages and the welding. The Society is to be satisfied with the methods of orientation of the divers or Remotely Operated Vehicle (ROV) on the plating, which should make use where necessary of permanent markings on the plating at selected points.

(vi) The equipment, procedure for observing and reporting the survey are to be discussed with the parties involved prior to the In-water Survey, and suitable time is to be allowed to permit the In-Water Survey firm to test all equipment beforehand.

(vii) The In-Water Survey is to be carried out under the surveillance of the Surveyor by an In-Water Survey firm approved as a service supplier according to "Guidelines for Approval of Service Suppliers" of the Society.

(viii) The Surveyor is to be satisfied with the method of pictorial representation, and a good two-way communication between the Surveyor and divers is to be provided.

(ix) If the In-Water Survey reveals damage or deterioration that requires early attention, the Surveyor may require that the ship be drydocked in order that a detailed survey can be undertaken and the necessary repairs carried out.

(x) The In-Water Survey may not be applicable if there are outstanding recommendations for repairs to the propeller, rudder, stern frame, underwater hull structure, or sea valves.

(b) Plans and documents

When ships are intended to be subjected to an In-Water Survey, the following plans and documents are to be submitted to the Society:

(i) Plans of the shell plating below waterline showing the details of the location and sizes of shell opening, location of bottom plugs, location of water and oil tight bulkheads;

(ii) Detailed information or drawings of constructions and arrangement indicated in the item (c) below together with their colour photographs and detailed instruction for inspection of such constructions and arrangements; and

(iii) Documents showing the procedure which enables the Surveyor to confirm the clearance of the rudder bearing or the condition of the stern tube bearing based on a review of the operating history, the onboard testing or analysis of sampled stern lubricating oil or lubricating freshwater.
Where the bearing is found to be satisfactory, special consideration may be given to the requirements in 2.2.2(c)(ii) or 2.2.2(c)(v) below.

(iv) Other data, if deemed necessary.

(c) Constructions and arrangement

The constructions and arrangements of ships which are intended to be subjected to an In-Water Survey are to comply with the following. Where the documents specified in 2.2.2(b)(iii) above are submitted, special consideration may be given to 2.2.2(c)(ii) or 2.2.2(c)(v) below.

(i) Anodes are to be attached in such a manner as to be easily replaced where necessary.

(ii) Rudder is to be provided with the means of facilitating the measurement of clearances in way of each pintle. Liners on rudder stock and pintles are to be marked in such a way so that any relative movements can be checked.

(iii) Rope guard ring plates are to be of such constructions as to facilitate the inspection of shafts between propeller hubs and stern frame boss.

(iv) In case of water lubricating type stern-tube bearings, the devices which may indicate the clearance of propeller shaft strut and stern bearings are to be provided.

(v) In case of oil or freshwater lubricating type stern-tube bearings, suitable means of ascertaining the performances of stern-tube bearings including oil sealing devices are to be provided.

(vi) Suitable means of ascertaining the position and identifying each blade of propellers from inboard are to be provided.

(vii) Hinged gratings are installed on all sea chests and constructed so as to facilitate opening and closing by the divers.

(viii) Markings indicating the position of longitudinal and transverse bulkheads and the names of interior spaces on the hull below the load water line, so that the diver or Remotely Operated Vehicle is able to orient his/her/its position relative to the ship.

2.2.3 Extensions

(a) Extensions up to 1 month

General examination afloat to determine the ship's fitness for continued service during the extension period is to include:

(i) Examination and testing of the steering machinery as considered necessary

(ii) Review of on board records to confirm satisfactory operation of the propulsion machinery

(iii) Confirmation that no damages and/or grounding have occurred since the last attendance by the Surveyor.

(iv) External examination of the saltwater systems with particular attention to nonmetallic expansion pieces (if fitted), sea valves and their attachments to the sea chests/side shell

(v) Re-examination of any condition of class with a view to confirm condition satisfactory for service through the subject extension period

(vi) All class surveys are current

In addition, when the requested extension date exceeds 36 months from the previous drydocking survey, an examination of the underwater body by an In-Water Survey company approved by the Society is required (with the underwater body sufficiently clean and water clear enough for a meaningful examination) including rudder, propeller, visible parts of the stern bearing assembly and sea chests.

(b) Extensions up to 3 months

General examination afloat to determine the ship's fitness for continued service during the extension period is to include:

(i) Examination and testing of the steering machinery as considered necessary

(ii) Review of on board records to confirm satisfactory operation of the propulsion machinery

(iii) Confirmation that no damages and/or grounding have occurred since the last attendance by the Surveyor.

(iv) External examination of the saltwater systems with particular attention to nonmetallic expansion pieces (if fitted), sea valves and their attachments to the sea chests/side shell

(v) Re-examination of any condition of class to confirm condition satisfactory for service through the subject extension period

(vi) All class Surveys are current.

In addition, when the requested extension date exceeds 36 months from the previous drydocking survey, the following examinations are required:

(vii) An examination of the underwater body by an In-Water Survey company approved by the Society, (with the underwater body sufficiently clean and water clear enough for a meaningful examination), including rudder, propeller, visible parts of the stern bearing assembly and sea chests

(viii) Strut/stern bearing and rudder clearances to be determined as possible and confirmed satisfactory for continued service during subject deferral period. Where not practical, rudder pintle clearances may be dispensed with if the attending Surveyor is satisfied with the physical and securing arrangements of the pintle.

(ix) Oil-lubricated stern bearings to be visually checked for oil leaks

2.3 Surveys of Propeller Shafts and Tube Shafts

2.3.1 General

(a) Application

(i) Unless alternative means are provided to assure the condition of the propeller shaft assembly, the requirements specified in 2.3.2 and 2.3.3 apply to all vessels with conventional shafting fitted with a propeller.

(ii) The surveys for miscellaneous propellers including controllable pitch propellers, directional propeller units and water jet units are to be carried out in accordance with 2.3.4.

(iii) Propeller shaft condition monitoring, survey in place and wear-down limits are to in accordance with 2.3.5 to 2.3.7.

(b) Definitions (See also Fig. I 2-6.)

(i) Shaft

For the purpose of this paragraph shaft is a general definition that includes:

(1) Propeller shaft

(2) Tube shaft

The definition does not include the intermediate shaft(s) which is(are) considered part of the propulsion shafting inside the vessel.

(ii) Propeller Shaft

Propeller shaft is the part of the propulsion shaft to which the propeller is fitted. It may also be called screwshaft or tailshaft.

(iii) Tube Shaft

Tube shaft is a shaft placed between the intermediate shaft and propeller shaft, normally arranged within a stern tube or running in open water. It may also be called Stern Tube Shaft.

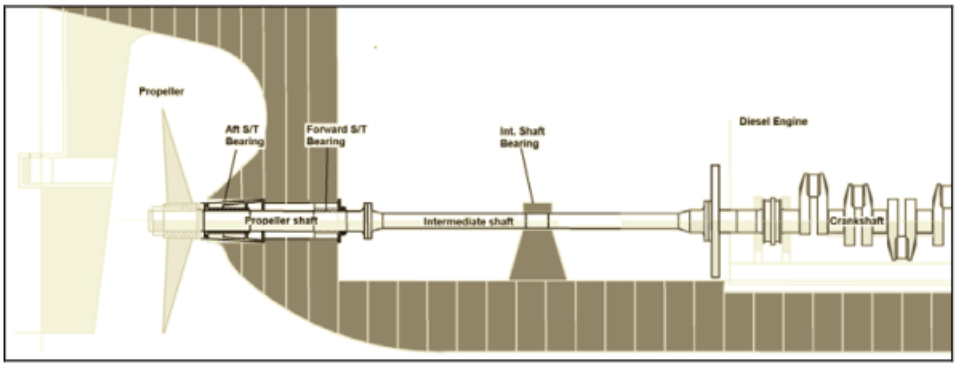

Fig. I 2-6
Typical Shafting Arrangement

(iv) Sterntube

Tube or pipe fitted in the shell of a ship at the stern (or rear part of the ship), below the water-line, through which passes the tube shaft or aftermost section of the propeller-shaft.

Sterntube is the housing of the shaft bearings, generally two (one aft and one fore), that sustain the shaft and allows its rotation with less frictional resistance. The stern tube also accommodates the shaft sealing arrangement.

(v) Closed loop (system) oil lubricated bearing

Closed loop oil lubricating systems use oil to lubricate the bearings and are sealed against the environment (seawater) by adequate sealing / gland devices.

(vi) Water Lubricated Bearing

Water lubricated bearings are bearings cooled / lubricated by water (fresh or salt).

(vii) Closed Loop System Fresh Water Lubricated Bearing

Closed loop water lubricating systems use fresh water to lubricate the bearings and are sealed against the environment (such as seawater) by adequate sealing / gland devices.

(viii) Open Systems (water)

Open water lubricating systems use water to lubricate the bearings and are exposed to the environment.

(ix) Adequate means for protection against corrosion

An adequate means for protection against corrosion is an approved means for full protection of the core shaft against sea water intrusion and subsequent corrosion attack. Such means are used for the protection of common steel material against corrosion particularly in combination with water lubricated bearings.

Typical means are for example:

(1) continuous metallic, corrosion resistant liners,

(2) continuous cladding,

(3) multiple layer synthetic coating,

(4) multiple layer of fiberglass,

(5) combinations of above mentioned,

(6) rubber / elastomer covering coating.

The means for protection against corrosion are installed / applied according to the Society approved procedures.

(x) Corrosion Resistant Shaft

Corrosion resistant shaft is made in approved corrosion resistant steel as core material for the shaft.

(xi) Sterntube Sealing System

Sterntube Sealing system is the equipment installed on the inboard extremity and, for closed systems, at outboard extremity of the sterntube. Inboard Seal is the device fitted on the fore part of the sterntube that achieve the sealing against the possible leakage of the lubricant media in to the ship internal.

Outboard seal is the device fitted on the aft part of the sterntube that achieve the sealing against the possible sea water ingress and the leakage of the lubricant media.

(xii) Service records

Service records are regularly recorded data showing in-service conditions of the shaft(s) and may include, as applicable: lubricating oil temperature, bearing temperature and oil consumption records (for oil lubricated bearings) or water flow, water temperature, salinity, pH, make-up water and water pressure (for closed loop fresh water lubricated bearings depending on design).

(xiii) Oil sample examination

An oil sample examination is a visual examination of the stern tube lubricating oil taken in the presence of the Surveyor with a focus on water contamination.

(xiv) Lubricating oil analysis

Lubricating oil analysis is to be carried out at regular intervals not exceeding 6 months taking into account IACS Rec. 36.

The documentation on lubricating oil analysis is to be available on board.

Oil samples, to be submitted for the analysis, should be taken under service conditions.

(xv) Fresh Water sample test

Fresh water sample test should be carried out at regular intervals not exceeding 6 months.

Samples are to be taken under service conditions and are to be representative of the water circulating within the sterntube.

Analysis results are to be retained on board and made available to the Surveyor.

At time of survey the sample for the test has to be taken at the presence of the Surveyor.

Fresh water sample test shall include the following parameters:

(1) chlorides content,

(2) pH value,

(3) presence of bearing particles or other particles (only for laboratory analysis, not required for tests carried out in the presence of the Surveyor).

(xvi) Keyless connection

Keyless connection is the forced coupling Methodology between the shaft and the propeller without a key achieved through interference fit of the propeller boss on the shaft tapered end.

(xvii) Keyed connection

Keyed connection is the forced coupling Methodology between the shaft and the propeller with a key and keyway achieved through the interference fit of the propeller boss on the shaft tapered end.

(xviii) Flanged connection

Flanged connection is the coupling Methodology, between the shaft and the propeller, achieved by a flange, built in at the shaft aft end, bolted to propeller boss.

(xix) Alternative means

Shafting arrangements such as, but not limited to, an approved Condition Monitoring Scheme and / or other reliable approved means for assessing and monitoring the condition of the tail shaft, bearings, sealing devices and the stern tube lubricant system capable to assure the condition of the propeller shaft assembly with an equivalent level of safety as obtained by survey methods as applicable herein.

2.3.2 Oil lubricated shafts or closed loop system fresh water lubricated shafts (closed system)

(a) Shaft survey methods

(i) METHOD 1

The survey is to consist of:

- Drawing the shaft and examining the entire shaft, seals system and bearings
- For keyed and keyless connections:
  - Removing the propeller to expose the forward end of the taper,
  - Performing a non-destructive examination (NDE) by an approved surface crack-detection method all around the shaft in way of the forward portion of the taper section, including the keyway (if fitted). For shaft provided with liners the NDE shall extended to the after edge of the liner.
- For flanged connection:
  - Whenever the coupling bolts of any type of flange-connected shaft are removed or the flange radius is made accessible in connection with overhaul, repairs or when deemed necessary by the Surveyor, the coupling bolts and flange radius are to be examined by means of an approved surface crack detection method.
- Checking and recording the bearing clearances.
- Verification that the propeller is free of damages which may cause the propeller to be out of balance.
- Verification of the satisfactory conditions of inboard and outboard seals during the re-installation of the shaft and propeller.
- Recording the bearing weardown measurements (after re-installation)

(ii) METHOD 2

The survey is to consist of:

- For keyed and keyless connections:
  - Removing the propeller to expose the forward end of the taper,
  - Performing a non-destructive examination (NDE) by an approved surface crack-detection Method all around the shaft in way of the forward portion of the taper section, including the keyway (if fitted).
- For flanged connection:
  - Whenever the coupling bolts of any type of flange-connected shaft are removed or the flange radius is made accessible in connection with overhaul, repairs or when deemed necessary by the Surveyor, the coupling bolts and flange radius are to be examined by means of a an approved surface crack detection Method.
- Checking and recording the bearing weardown measurements.
- Visual Inspection of all accessible parts of the shafting system.
- Verification that the propeller is free of damages which may cause the propeller to be out of balance.

- Seal liner found to be or placed in a satisfactory condition.
- Verification of the satisfactory re-installation of the propeller including verification of satisfactory conditions of inboard and outboard seals.

Pre-requisites to satisfactorily verify in order to apply METHOD 2:

- Review of service records.
- Review of test records of:
  - Lubricating Oil analysis (for oil lubricated shafts), or
  - Fresh Water Sample test (for closed system fresh water lubricated shafts).
- Oil sample Examination (for oil lubricated shafts), or Fresh Water Sample test (for closed system fresh water lubricated).
- Verification of no reported repairs by grinding or welding of shaft and/or propeller.

(iii) METHOD 3

The survey is to consist of:

- Checking and recording the bearing weardown measurements.
- Visual Inspection of all accessible parts of the shafting system.
- Verification that the propeller is free of damages which may cause the propeller to be out of balance.
- Seal liner found to be or placed in a satisfactory condition.
- Verification of the satisfactory conditions of inboard and outboard seals.

Pre-requisites to satisfactorily verify in order to apply METHOD 3:

- Review of service records.
- Review of test records of
  - Lubricating Oil analysis (for oil lubricated shafts), or
  - Fresh Water Sample test (for closed system fresh water lubricated shafts).
- Oil sample Examination (for oil lubricated shafts), or Fresh Water Sample test (for closed system fresh water lubricated).
- Verification of no reported repairs by grinding or welding of shaft and/or propeller.

(b) Shaft extension surveys - Extension types

(i) Extension up to 2.5 years

The survey is to consist of:

- Checking and recording the bearing weardown measurements, as far as practicable.
- Visual Inspection of all accessible parts of the shafting system.
- Verification that the propeller is free of damages which may cause the propeller to be out of balance.
- Verification of the effectiveness of the inboard seal and outboard seals.

Pre-requisites to satisfactorily verify in order to apply EXTENSION UP TO 2.5 YEARS:

- Review of service records.
- Review of test records of
  - Lubricating Oil analysis (for oil lubricated shafts), or
  - Fresh Water Sample test (for closed system fresh water lubricated shafts).
- Oil sample Examination (for oil lubricated shafts), or Fresh Water Sample test (for closed system fresh water lubricated).
- Verification of no reported repairs by grinding or welding of shaft and/or propeller.

- Confirmation from the Chief Engineer that the shafting arrangement is in good working condition.

(ii) Extension up to 1 year

The survey is to consist of:

- Visual Inspection of all accessible parts of the shafting system.
- Verification that the propeller is free of damages which may cause the propeller to be out of balance.
- Verification of the effectiveness of the inboard seal and outboard seals.

Pre-requisites to satisfactorily verify in order to apply EXTENSION UP TO 1 YEAR:

- Review of the previous weardown and/or clearance recordings.
- Review of service records.
- Review of test records of
  - Lubricating Oil analysis (for oil lubricated shafts), or
  - Fresh Water Sample test (for closed system fresh water lubricated shafts).
- Oil sample Examination (for oil lubricated shafts), or Fresh Water Sample test (for closed system fresh water lubricated).
- Verification of no reported repairs by grinding or welding of shaft and/or propeller.
- Confirmation from the Chief Engineer that the shafting arrangement is in good working condition.

(iii) Extension up to 3 months

The survey is to consist of:

- Visual Inspection of all accessible parts of the shafting system.
- Verification of the effectiveness of the inboard seal.

Pre-requisites to satisfactorily verify in order to apply EXTENSION UP TO 3 MONTHS:

- Review of the previous weardown and/or clearance recordings.
- Review of service records.
- Review of test records of.
  - Lubricating Oil analysis (for oil lubricated shafts), or
  - Fresh Water Sample test (for closed system fresh water lubricated shafts).
- Oil sample Examination (for oil lubricated shafts), or Fresh Water Sample test (for closed system fresh water lubricated).
- Verification of no reported repairs by grinding or welding of shaft and/or propeller.
- Confirmation from the Chief Engineer that the shafting arrangement is in good working condition.

(c) Oil lubricated shafts

(i) Survey intervals

For surveys completed within 3 months before the shaft survey due date, the next period will start from the shaft survey due date.

(1) Flanged propeller connection
The following Methods are applicable:

a) Method 1 every 5 years, or

b) Method 2 every 5 years (pre- requisites have to be fulfilled), or

c) Method 3 every 5 years (pre-requisites have to be fulfilled).

(2) Keyless propeller connection
The following Methods are applicable:

a) Method 1 every 5 years, or

b) Method 2 every 5 years (pre-requisites have to be fulfilled), or

c) Method 3 every 5 years (pre-requisites have to be fulfilled). The maximum interval between 2 surveys carried out according to Method 1 or Method 2 shall not exceed 15 years, except in the case when one extension for no more than 3 months is granted.

(3) Keyed propeller connection
The following Methods are applicable:

a) Method 1 every 5 years, or

b) Method 2 every 5 years (pre-requisites have to be fulfilled).

(ii) Survey extensions

For all types of propeller connections, the interval between two consecutive surveys may be extended after the execution of extension survey as follows:

(1) Extension up to a maximum of 2.5 years: no more than one extension can be granted. No further extension, of other type, can be granted.

(2) Extension up to a maximum of 1 year: no more than two consecutive "one year extensions" can be granted. In the event an additional extension is requested the requirements of the "2.5 year extension" are to be carried out and the shaft survey due date, prior to the previous extension(s), is extended for a maximum of 2.5 years.

(3) Extension up to a maximum of 3 months: no more than one "3 months extension" can be granted. In the event an additional extension is requested the requirements of the "one year extension" or "2.5 years extension" are to be carried out and the shaft survey due date, prior to the previous extension, is extended for a maximum of 1 year or 2.5 years.

The extension survey should normally be carried out within 1 month of the shaft survey due date and the extension counts from the shaft survey due date.

If the extension survey is carried out more than 1 month prior to the shaft survey due date, then the period of extension counts from the date of the extension survey was completed.

(d) Survey intervals of closed loop system fresh water lubricated shafts

The maximum interval between two surveys carried out according to Method 1 shall not exceed 15 years. An extension for no more than 3 months can be granted.

(i) For surveys completed within 3 months before the shaft survey due date, the next period will start from the shaft survey due date.

(1) Flanged propeller connection
The following Methods are applicable:

a) Method 1 every 5 years, or

b) Method 2 every 5 years (pre-requisites have to be fulfilled), or

c) Method 3 every 5 years (pre-requisites have to be fulfilled).

(2) Keyless propeller connection
The following Methods are applicable:

a) Method 1 every 5 years, or

b) Method 2 every 5 years (pre-requisites have to be fulfilled), or

c) Method 3 every 5 years (pre-requisites have to be fulfilled).

(3) Keyed propeller connection
The following Methods are applicable:

a) Method 1 every 5 years, or

b) Method 2 every 5 years (pre-requisites have to be fulfilled).

(ii) Survey extensions

For all types of propeller connections, the interval between two consecutive surveys may be extended after the execution of extension survey as follows:

(1) Extension up to a maximum of 2.5 years, no more than one extension can be granted.
No further extension, of other type, can be granted.

(2) Extension up to a maximum of 1 year, no more than two consecutive extensions can be granted. In the event an additional extension is requested the requirements of the "2.5 year extension" are

to be carried out and the shaft survey due date, prior to the previous extension(s), is extended for a maximum of 2.5 years.

(3) Extension up to a maximum of 3 months, no more than one "3 months extension" can be granted. In the event an additional extension is requested the requirements of the "one year extension" or "2.5 years extension" are to be carried out and the shaft survey due date, prior to the previous extension, is extended for a maximum of one year or 2.5 years.

The extension survey should normally be carried out within 1 month of the shaft survey due date and the extension counts from the shaft survey due date.

If the extension survey is carried out more than 1 month prior to the shaft survey due date, then the period of extension counts from the date of the extension survey was completed.

The maximum interval between two surveys carried out according to Method 1 shall not exceed 15 years, except in the case when one extension for no more than 3 months is granted.

(e) Survey Intervals for closed systems are as follows.

Survey Intervals for Closed Systems

Survey Intervals (closed systems)			
Oil Lubricated			
	Flanged Propeller Coupling	Keyless Propeller Coupling	Keyed Propeller Coupling(2)
Every 5 years(1)	Method 1 or Method 2 or Method 3	Method 1 or Method 2 or Method 3(3)	Method 1 or Method 2
Extension 2.5 years	Yes(4)	Yes(4)	Yes(4)
Extension 1 year	Yes(5)	Yes(5)	Yes(5)
Extension 3 months	Yes(6)	Yes(6)	Yes(6)
Closed Loop System Fresh Water Lubricated			
	Flanged Propeller Coupling	Keyless Propeller Coupling	Keyed Propeller Coupling(2)
Every 5 years(1)	Method 1(7) or Method 2 or Method 3	Method 1(7) or Method 2 or Method 3	Method 1(7) or Method 2
Extension 2.5 years	Yes(4)	Yes(4)	Yes(4)
Extension 1 year	Yes(5)	Yes(5)	Yes(5)
Extension 3 months	Yes(6)	Yes(6)	Yes(6)
Footnotes: For surveys (Method 1, or Method 2, or Method 3) completed within 3 months before the shaft survey due date, the next period will start from the shaft survey due date. The extension survey should normally be carried out within 1 month of the shaft survey due date and the extension counts from the shaft survey due date. If the extension survey is carried out more than 1 month prior to the shaft survey due date, then the period of extension counts from the date of the extension survey was completed.			

Notes:

(1) Unless an Extension type (Extension 2.5 years, Extension 1 year, Extension 3 months) is applied in between.
(2) Method 3 not allowed.
(3) The maximum interval between two surveys carried out according to Method 1 or Method 2 shall not exceed 15 years, except in the case when one extension for no more than 3 months is granted.
(4) No more than one extension can be granted. No further extension of other type can be granted.
(5) No more than two consecutive extensions can be granted. In the event an additional extension is requested the requirements of the "2.5 years extension" are to be carried out and the shaft survey due date, prior to the previous extension(s), is extended for a maximum of 2.5 years.
(6) No more than one 3 months extension can be granted. In the event an additional extension is requested the requirements of the "1 year extension" or "2.5 years extension" are to be carried out and the shaft survey due date, prior to the previous extension, is extended for a maximum of one year or 2.5 years.
(7) The maximum interval between two surveys carried out according to Method 1 shall not be more than 15 years.

2.3.3 Water Lubricated shafts (open systems)

(a) Shaft Survey Methods

(i) METHOD 4

The survey is to consist of:

- Drawing the shaft and examining the entire shaft (including liners, corrosion protection system and stress reducing features, where provided), inboard seal system and bearings.
- For keyed and keyless connections:
  - removing the propeller to expose the forward end of the taper,
  - performing a non-destructive examination (NDE) by an approved surface crack-detection Method all around the shaft in way of the forward portion of the taper section, including the keyway (if fitted). For shaft provided with liners the NDE shall be extended to the after edge of the liner
- For flanged connection:
  - Whenever the coupling bolts of any type of flange-connected shaft are removed or the flange radius is made accessible in connection with overhaul, repairs or when deemed necessary by the Surveyor, the coupling bolts and flange radius are to be examined by means of an approved surface crack detection method.
- Checking and recording the bearing clearances.
- Verification that the propeller is free of damages which may cause the propeller to be out of balance.
- Verification of the satisfactory conditions of inboard seal during re-installation of the shaft and propeller.

(b) Shaft extension surveys - Extension types

(i) Extension up to 1 year

The survey is to consist of:

- Visual Inspection of all accessible parts of the shafting system.
- Verification that the propeller is free of damages which may cause the propeller to be-out of balance.
- Checking and recording the clearances of bearing.
- Verification of the effectiveness of the inboard seal.

Pre-requisites to satisfactorily verify in order to apply EXTENSION UP TO 1YEAR:

- Review of the previous clearance recordings.
- Service records.
- Verification of no reported repairs by grinding or welding of shaft and/or propeller.
- Confirmation from the Chief Engineer that the shafting arrangement is in good working condition.

(ii) Extension up to 3 months

The survey is to consist of:

- Visual Inspection of all accessible parts of the shafting system.
- Verification that the propeller is free of damages which may cause the propeller to be out of balance.
- Verification of the effectiveness of the inboard seal.

Pre-requisites to satisfactorily verify in order to apply extension up to 3 months:

- Review of the previous clearance recordings.
- Service records.

- Verification of no reported repairs by grinding or welding of shaft and/or propeller.
- Confirmation from the Chief Engineer that the shafting arrangement is in good working condition.

(c) Shaft Survey Intervals

(i) The following survey intervals between surveys according to Method 4 are applicable to all types of propeller connections.

- For keyless propeller connections the maximum interval between 2 consecutive dismantling and verifications of the shaft cone by means of non-destructive examination (NDE) shall not exceed 15 years.
- For surveys completed within 3 months before the shaft survey due date, the next period will start from the shaft survey due date.

(1) Configurations allowing 5 year intervals

- Single shaft operating exclusively in fresh water.
- Single shaft provided with adequate means of corrosion protection, or single corrosion resistant shaft.
- All kinds of multiple shafts arrangements.

(2) Other systems
Shaft not belonging in one of the configurations listed in (1) above has to be surveyed according to Method 4 every 3 years.

(ii) Survey extensions

For all types of propeller connections, the interval between 2 consecutive surveys may be extended after the execution of extension survey as follows:

(1) Extension up to a maximum of 1 year: no more than 1 extension can be granted.
No further extension, of other type, can be granted.

(2) Extension up to a maximum of 3 months: no more than 1 "3 months extension" can be granted. In the event an additional extension is requested the requirements of the "1 year extension" are to be carried out and the shaft survey due date prior to the previous extension is extended for a maximum of 1 year.

The extension survey should normally be carried out within 1 month of the shaft survey due date and the extension counts from the shaft survey due date.

If the extension survey is carried out more than 1 month prior to the shaft survey due date, then the period of extension counts from the date of the extension survey was completed.

(d) Survey intervals for open systems are as follows.

Survey Intervals for Open Systems

Survey Intervals (Open Systems)			
- Single shaft operating exclusively in fresh water. - Single shaft provided with adequate means of corrosion protection, single corrosion resistant shafts - All kinds of multiple shafts arrangements		Other shaft configuration	
All kinds of propeller coupling(4)		All kinds of propeller coupling(4)	
Every 5 years(1)	Method 4	Every 3 years(1)	Method 4
Extension 1 year	Yes(2)	Extension 1 year	Yes(2)
Extension 3 months	Yes(3)	Extension 3 months	Yes(3)
Footnotes: For surveys (Method 4) completed within 3 months before the shaft survey due date, the next period will start from the shaft survey due date. The extension survey should normally be carried out within 1 month of the shaft survey due date and the extension counts from the shaft survey due date. If the extension survey is carried out more than 1 month prior to the shaft survey due date, then the period of extension counts from the date of the extension survey was completed.			

Notes:

(1) Unless an Extension type (Extension 1 Y, Extension 3 M) is applied in between.

(2) No more than one extension can be granted. No further extension, of other type, can be granted.

(3) No more than one extension can be granted. In the event an additional extension is requested the requirements of the one year extension are to be carried out and the shaft survey due date prior to the previous extension is extended for a maximum of one year.

(4) For keyless propeller connections the maximum interval between two consecutive dismantling and verifications of the shaft cone by means of non-destructive examination (NDE) shall not exceed 15 years.

2.3.4 Miscellaneous propellers

(a) Controllable pitch propellers where fitted are to be opened up and the working parts examined, together with the control gear.

(b) Directional propeller units are to be examined as the following requirements.

(i) Lubrication oil samples are to be taken and sent to a recognised laboratory for analysis at regular intervals, not exceeding 3 months. Records of lubrication oil analysis are to include trends of previous analysis, and be available onboard at all times. A representative oil sample is to be taken before the filters and with the unit in its normal running condition. Oil analysis is to detect iron (Fe) and other solid contamination in addition to possible water content. Acceptance criteria for wear particles and water content are set by the relevant thruster maker (in case thruster maker criteria are not available due to e.g. bankruptcy of gear thruster maker, the water content due to condensation is normally not to exceed 0.5%). The oil analysis is to cover all of the following areas, if applicable:

(1) lubrication oil for gears, bearings;

(2) sealing boxes;

(3) steering gear; and

(4) propeller.

If the propeller shafts seal oil systems do not allow for sampling unless the vessel is in dry dock, a representative oil analysis is to be taken in connection with the Bottom Survey in dry-dock.

(ii) The thrusters are to be subjected to complete survey every 5 years. The complete survey is to include:

(1) evaluation of oil analysis of gear lubrication oil, propeller hydraulic system oil and sealing system oil as specified in 2.3.4(b)(i) above.

(2) opening up of protection covers.

(3) inspection of power transmission gear, bearings, visible parts of shafts and general condition of housing internally. Gear clearance and axial play of bearings shall be measured.

(4) examination of controllable pitch mechanism oil transmission system and feedback system.

(5) full stroke ahead and astern are to be verified and correct blade position feed-back and indication verified.

(6) examination of steering column and related sealing and bearing.

(7) running test at MCR (max continuous rating).

(iii) Inboard parts of the thruster accessible from the inside, such as drive motors, shafting system, gear transmissions, pumps and piping systems, alarm, safety and control systems are covered by the class surveys of machinery. This will be applicable for e.g. Voith-Schneider and pump type thrusters.

(iv) Outboard parts of the thruster, accessible from the outside, are to be externally examined during the Bottom Surveys.

(v) If the thruster is overhauled at the time of the complete survey, NDT for TIFF (tooth interior fatigue fracture) shall be carried out according to maker's requirements and acceptance criteria. If the thruster is overhauled during the interval between two scheduled surveys, satisfactory documentation for NDT (TIFF) performed according to maker's requirements and acceptance criteria is to be submitted to the attending Surveyor at the next survey. Mounting of the thruster on board is to be verified and function tested.

(c) Waterjet units

Waterjet units for main propulsion purposes, including the impeller, casing, shaft, shaft seal, shaft bearing, inlet and outlet channels, steering nozzle, reversing arrangements, and control gear are to be surveyed at intervals not exceeding 5 years, provided the impeller shafts are made of approved corrosion-resistant material or have approved equivalent arrangements. They are to be generally examined so far as practicable. Dismantling may be required to the extent found necessary by the Surveyor.

(d) Dynamic positioning and/or thruster-assisted mooring and athwartship thrust propellers and shaftings are to be surveyed at intervals not exceeding 5 years. They are to be generally examined so far as possible in dry dock and tested under working conditions afloat for satisfactory operation. All accessible parts, including sealing, locking and bearing faces, and any other moving parts are to be examined. Non-destructive examination is to be carried out as considered necessary by the Surveyor on blade/fin roots. Consideration may be given to condition monitoring schemes for determining the condition of the unit.

2.3.5 Propeller shaft condition monitoring (PCM)

(a) Where oil lubricated shaft with approved oil glands are fitted, a class notation **PCM** may be assigned, if it's relevant drawing(s) and data are submitted and approved by the Society. The management systems are to comply with the following:

(i) Lubricating oil analysis is to be carried out regularly at intervals not exceeding 6 months. The lubricating oil analysis documentation is to be available on board. Each analysis is to include the following minimum parameters:

(1) Water content;

(2) Chloride content;

(3) Bearing material and metal particles content; and

(4) Oil ageing (resistance to oxidation).

Oil samples are to be taken under service conditions and representative of the oil within the stern-tube.

(ii) Oil consumption is to be recorded monthly.

(iii) Bearing temperatures are to be recorded daily, (2 temperature sensors with alarm or other approved arrangements are to be provided).

(iv) Facilities are to be provided for measurement of bearing wear down.

(v) Oil glands are to be capable of being replaced without withdrawal of the propeller shaft or removal of the propeller.

(b) For maintenance of the **PCM** notation, Annual Survey is to be carried out as follows:

(i) Satisfactory operating conditions of the propeller shaft are to be confirmed, including the verification of the records of lubricating oil analysis, lubricating oil consumption, bearing temperatures and wear down readings.

(c) Where the notation **PCM** has been assigned, the propeller shaft need not be withdrawn at surveys as required by 1.6.8 provided all condition monitoring data is found to be within permissible limits and all exposed areas of the shaft are examined by a magnetic particle crack detection method. Where the Surveyor considers that the data presented is not entirely to his satisfaction the shaft will be required to be withdrawn in accordance with 1.6.8.

(d) For ships with **PCM** notation, the maximum propeller shaft survey interval required by 2.3.2(c) or (d) of this part shall not exceed 15 years provided:

(i) Annual Surveys are carried out to the satisfaction of the attending Surveyors, and

(ii) The followings are carried out at each propeller shaft survey due date required by 2.3.2(c) or (d).

(1) Bearing weardown measurement.

(2) Verification that the propeller is free of damage which may cause the propeller to be out of balance.

(3) Verification of effective inboard seal.

(4) Renewal of outboard seal in accordance with manufacturer's recommendation.

(5) For keyed propellers, the fore part of the shaft taper and shaft keyway are to be examined by an appropriate surface crack detection method(such as magnetic particle or dye-penetration), for which dismantling of the propeller and removal of the key will be required.

(e) Initial survey for existing ships obtaining **PCM** notation

(i) All systems required by 2.3.5(a) of this Part are to be examined and tested in accordance with the approval plans, and

(ii) Propeller shaft survey as per 2.3 of this Part will be required if the last propeller shaft survey was carried out more than 5 years prior to the initial survey, or

(iii) The propeller shaft survey may be waived subject to satisfactory review of the following records:

(1) Six-monthly records of stern bearing oil analysis for water and metal contents, covering the last 5 years.

(2) Monthly records of stern bearing oil consumption, covering the last 5 years.

(3) Monthly records of stern bearing temperature monitoring, covering the last 5 years.

(4) Propeller shaft, stern bearing assembly and propeller operation and repair records, if available.

(5) Records of stern bearing clearance and weardown measurement from new building and last dry docking.

2.3.6 Survey in place

The scope of a survey of propeller shafts and tube shafts in place consists of:

(a) Checking of the clearances of the stern tube shafts,

(b) Checking of the tightness of the oil sealing glands,

(c) Examination of propeller,

(d) Where a controllable pitch propeller is fitted, it is to be ascertained that the pitch control device is in good working order, and if considered necessary, the device is to be opened up for further examination.

2.3.7 Wear-down Limits

(a) The after water-lubricated bearing other than rubber is to be rebushed when clearance has reached the maximum allowable wear-down limit as follows:

	Machinery amidship: C	Machinery after: C
D ≤ 230	6.4 mm	4.8 mm
230 < D ≤ 305	8.0 mm	6.4 mm
305 < D	9.5 mm	8.0 mm
D = Diameter of propeller shaft, in mm. C = Max. allowable wear-down limit, in mm.		

(b) Water lubricated rubber bearing are to be rebushed when any water groove is half of the original depth, or whenever the clearance exceeds the limits as given in (a) above for water-lubricated bearings other than rubber, whichever occurs first.

(c) Oil-lubricated bearings are to be rebushed when the wear down exceeds manufacturer's recommendations.

2.4 Boiler Survey and Thermal Oil Heater Surveys

2.4.1 Boiler surveys

(a) At each survey, boilers, superheaters, and economizers are to be examined internally and externally in cleaned condition, including seat buffers and stays, if provided.

(b) Boiler mountings including safety valves are to be examined and opened up for further examination if deemed necessary by the Surveyor. Safety valves are to be set as the requirements in Part V. All studs fastening directly to boiler shells or heads, if provided, are to be examined.

(c) In case the dimensions of boiler plates, tubes and stays are required to be ascertained, an efficient non-destructive examination is to be carried out. The allowable working pressure may be required to reduce from its designed working pressure if the dimension is found to be undersized due to corrosion or waste.

Boiler safety valve relieving gear (easing gear) is to be examined and tested to verify satisfactory operation. This test is to be carried out prior to any safety valve operation or setting test under steam

For waste heat boilers, if steam cannot be raised at port, the safety valves may be tested and set by the Chief Engineer at sea, and the results recorded in the log book for review by the Surveyor.

(d) The oil fuel burning system together with its safety appliances, valves, control gears, oil discharge pipes between pumps and burners are to be examined under working condition.

(e) Automatic combustion control devices, if provided, are to be tested under working condition.

(f) In case an important repair carried out or if deemed necessary by the Surveyor, the hydraulic test may be required.

Note: Hydraulic test pressures are as follows:

Boiler's age	Test pressure	Remarks
Age < 12 years	$P = 1.25\ P_o$	$P_o \leq 4$ MPa
	$P = 1.2\ P_o + 0.2$	$P_o > 4$ MPa
Age ≥ 12 years	$P = 1.15\ P_o$	

P_o is the working pressure.

(g) In fired boilers employing forced circulation, the pumps used for this service are to be opened and examined at each boiler survey.

(h) Annual Examination

External examination of boilers including test of safety and protective devices, and test of safety valve using its relieving gear, is to be carried out within the window of the Annual Survey of the ship.

(i) Survey extensions

An extension may be granted by the Surveyor after the following is satisfactorily carried out:

(i) External examination of the boiler

(ii) Boiler safety valve relieving gear (easing gear) is to be examined and operationally tested

(iii) Boiler protective devices (alarms and shutdowns) operationally tested

(iv) Review of the following records since the last Boiler Survey:

Operation record, maintenance record, repair history record, and feedwater chemistry record.

(j) Auxiliary Boiler Alternative Survey Program

Ships with an approved program of Preventative Maintenance will be given special consideration for an alternative survey program of auxiliary boilers at the first Boiler Survey carried out during each 5-year Special Survey period. The Boiler Survey carried out in conjunction with the Special Survey is not eligible for the alternative survey program.

2.4.2 Thermal oil heater surveys

(a) Thermal oil plants are to be subjected to functional tests, while in operation.

(b) The following items are to be examined:

(i) The entire thermal oil plant for leakage.

(ii) The condition of the insulation.

(iii) The functioning of the indication, control and safety equipment.

(iv) Remote controls for the shut-off and discharge valves.

(v) Leakage monitors for heaters (for exhausting gas heating).

(vi) The testing of safety devices.

(c) Heating surfaces and, where appropriate, the combustion chamber, are to be examined for contamination, corrosion, deformations and leakage.

(d) As a rule, tightness tests are to be carried out to the admissible working pressure.

2.5 Annual Surveys

2.5.1 Annual surveys - hull

At each Annual Survey, the general condition of hull and equipment is to be examined so far as can be seen and placed in satisfactory condition as necessary, attention being paid to the following items:

(a) Examination of weather decks, ship side plating above water line, hatch covers and coamings and watertight penetrations.

(i) Confirmation is to be obtained that no unapproved changes have been made to the hatch covers, hatch coamings and their securing and sealing devices since the last survey.

(ii) Where mechanically operated steel covers are fitted, checking the satisfactory condition, as applicable, of:

(1) Hatch covers;

(2) Tightness devices of longitudinal, transverse and intermediate cross junctions (gaskets, gasket lips, compression bars, drainage channels);

(3) Clamping devices, retaining bars, cleating;

(4) Chain or rope pulleys;

(5) Guides;

(6) Guide rails and track wheels;

(7) Stoppers, etc;

(8) Wires, chains, gypsies, tensioning devices;

(9) Hydraulic system essential to close and securing;

(10) Safety locks and retaining devices.

(iii) Where portable covers, wooden or steel pontoons are fitted, checking the satisfactory condition, where applicable, of:

(1) Wooden covers and portable beams, and their securing devices;

(2) Steel pontoons;

(3) Tarpaulins;

(4) Cleats, battens, wedges;

(5) Hatch securing bars and their securing devices;

(6) Loading pads/bars and the side plate edge;

(7) Guide plates and chocks;

(8) Compression bars, drainage channels and drain pipes (if any).

(iv) Checking the satisfactory condition of hatch coaming plating and their stiffeners, including close-up survey where applicable.

(v) Random checking of the satisfactory operating of mechanically operated hatch covers is to be made including:

(1) Stowage and securing in open condition;

(2) Proper fit and efficiency of sealing in closed condition; and

(3) Operational testing of hydraulic and power components, wires, chains and link drives.

(vi) Examination of the weld connection between air pipes and deck plating.

(vii) External examination of all air pipe heads installed on the exposed decks.

(viii) Examination of flame screens on vents to all bunker tanks.

(ix) Examination of ventilators, including closing devices, if any.

(b) Suspect Areas and Examination of Ballast Tanks

(i) Suspect Areas identified at previous surveys are to be examined. Thickness measurements are to be taken of the areas of substantial corrosion and the extent of thickness measurements is to be increased to determine areas of substantial corrosion. Table I 2-4A may be used as guidance for these additional thickness measurements. These extended thickness measurements are to be carried out before the Annual Survey is credited as completed.

Note: these requirements are not applicable to cargo tanks of oil tankers, chemical tankers and double hull oil tankers.

(ii) Examination of ballast tanks when required as a consequence of the results of the Special Survey and Intermediate Survey is to be carried out. When considered necessary by the Surveyor, or where extensive corrosion exists, thickness measurement is to be carried out. If the results of these thickness measurements indicate that Substantial Corrosion is found, then the extent of thickness measurements is to be increased to determine areas of substantial corrosion. Table I 2-4A may be used as guidance for these additional measurements. These extended thickness measurements are to be carried out before the Annual Survey is credited as completed.

(c) Protection of other openings

(i) Hatchways, manholes, and scuttles in freeboard and superstructure decks.

(ii) Machinery casings, fiddley covers, companion-ways and deckhouses protecting openings in freeboard or enclosed superstructure decks.

(iii) Portlights together with dead covers, cargo ports, bow or stern access, chutes and similar openings in ship's sides or ends below the freeboard deck or in way of enclosed superstructures.

(iv) Ventilators, air pipes together with flame screens, scuppers and discharges serving spaces on or below the freeboard deck.

(v) Watertight bulkheads, bulkhead penetrations and wall of enclosed superstructure.

(vi) Weather-tight and watertight doors and closing appliances for all of the above including proper operation of such doors.

(d) Freeing ports together with bars, shutters and hinges.

(e) Protection of the crew

Guard rails, lifelines, gangways, accommodation ladders with accessory wires, winches and gears and deck houses accommodating crew.

(f) Verification of loading guidance and stability data

(i) For ship provided with the loading manual continuous such means in ready use.

(ii) For ship provided with the loading computer, confirmed that a loading computer installed on board have the performance and functions as deemed appropriate by the Society.

(iii) Confirmed that an approved stability booklet is kept on board for ready use.

(g) Verification that no alterations have been made to the hull or superstructures which would affect the calculation determining the position of load lines. The load line marks (see Appendix 4) are to be sighted, found plainly visible, and recut and/or painted as required. Surveys carried out by the National Authorities of the countries in which the ships are registered may be accepted as meeting these requirements.

(h) Anchoring and mooring equipment including the working test of windlass.

(i) Bow doors, inner doors, side shell doors and stern doors are to be surveyed as per Annual Survey, see IACS UR Z24-4.

(j) Fire protection and fire fighting arrangements including operation tests as far as practicable

Confirmation as far as practicable, that no significant changes have been made to the arrangement of structural fire protection is also to be carried out. Surveys carried out by the National Authorities of the countries in which the ships are registered may be accepted as meeting these requirements.

(k) Where ships have timber load lines, metal sockets or equivalent means for securing upright and eye plates for lashing are to be examined.

(l) Additional requirements for navigational arrangements for periodical one man watch, and where applicable integrated bridge system. Annual Surveys are to be carried out to ascertain that the equipment and arrangements required for the applicable class notation are being maintained in good working order. At the time of the survey relevant statutory certificates may be accepted as evidence of satisfactory operation.

(m) Helicopter deck

Where areas of the ship are designated for helicopter operations, the helicopter deck, deck supporting structure, deck surface, deck drainage, tie downs, markings, lighting, wind indicator, securing arrangements where fitted and safety netting or equivalent are to be examined.

(n) Ships constructed of reinforced plastic

In addition to the applicable requirements of the Annual Survey - hull is also to include the following:

(i) All accessible parts particularly liable to rapid deterioration.

(ii) The deck to hull connection, and superstructure and deckhouse connections to the deck.

(o) Where the special equipment notation **CSS** is assigned, the Surveyor is to examine the securing arrangements including loose fittings so far as necessary and practicable in order to be satisfied as to their general condition, see chapter 9 of "Guidelines for Container Securing Systems".

(p) The Surveyor is to confirm that, for container ships which have the special equipment notation **CSP**, the onboard lashing program, together with its operation manual, is available on board, see Appendix 2 of "Guidelines for Container Securing Systems".

2.5.2 Annual Survey – machinery

At each Annual Survey, the following requirements are to be complied with:

(a) At each Annual Survey, a general examination of the propelling machinery and essential auxiliaries, is to be made. The Surveyor may in addition, require such further items to be opened up as considered necessary to ascertain that they are in good working condition.

(b) Machinery and boiler spaces with particular attention to the fire and explosion hazards, and also emergency escape routes are to be generally examined.

(c) All main and auxiliary steering gears including their associated and control systems are to be examined and tested in operation.

(d) All the means of communication between the navigation bridge and the machinery control position, as well as the bridge and the alternative steering position, if fitted, are to be tested.

(e) Bilge pumping systems and bilge wells including operation of pumps, remote reach-rods and level alarms, where fitted, are to be examined as far as practical.

(f) Boilers, thermal oil heaters heated by flame or combustion gas, pressure vessels and their mountings including safety devices, foundations, controls, releasing gear, high pressure and steam escape piping, insulation and gauges are to be externally examined. Confirmation of the safety devices of the boilers and the thermal oil heaters may be required as considered necessary by the Surveyor.

In addition, boilers are to be examined in accordance with 2.4.1(h) of this Chapter.

(g) Electrical machinery, emergency sources of electrical power switchgear and other electrical equipment are to be generally examined and also to be tested in operation as far as practicable.

(h) Confirmation as far as practicable of the operation of all emergency sources of power is to be made. If they are automatic, also in the automatic mode.

(i) Where automatic and/or remote controls are fitted for essential machinery, they are to be tested to demonstrate that they are in good working condition.

(j) Parts which are opened up for maintenance at Owner's option are to be examined as necessary.

(k) For hydraulic power units, hoses, piping for any damage, corrosion or leakages, and hydraulic oil cooling system condition and operation are to be checked. Operational test of all emergency stops, controls and remote controls are also to be checked.

(l) Additional requirements for oil tankers and ships carrying dangerous chemicals in bulk

At each Annual Survey, the following are to be examined and placed in good order:

(i) All electrical equipment and cables in dangerous zones on weather decks and cargo pump rooms.

(ii) Cargo, bilge, ballast and stripping pumps including pump foundation in cargo pump rooms as far as practicable.

(iii) Electrical and mechanical remote operating and shutdown devices including operation tests in cargo pump rooms.

2.5.3 Annual Survey – **CAS**, **CAU** and **CAB**

The following performances are to be made and placed in order. Where appropriate records of daily checks and periodical maintenance have been kept, some of the tests may be dispensed with at the Surveyor's discretion.

(a) Safety devices for main propulsion machinery or controllable pitch propellers, and emergency stopping devices for main propulsion machinery fitted in the remote control station for the main propulsion machinery or controllable pitch propellers.

(b) Safety devices for boilers.

(c) Safety devices for electric generating sets.

(d) Communication system specified in 2.9 in Part VIII.

2.5.4 Annual Survey - marine oil pollution prevention installations

Marine oil pollution prevention installations including operation tests as far as practicable are to be surveyed according to the IMO Resolution A.1053(27) - Guidelines for Surveys under Annex I of MARPOL 73/78 with its amendments. Surveys carried out by the National Authorities of the countries in which the ships are registered may be accepted as meeting these requirements.

2.6 Intermediate Surveys

2.6.1 A survey planning meeting is to be held prior to the commencement of the survey.

2.6.2 Concurrent crediting to both Intermediate Survey (IS) and Special Survey (SS) for surveys and thickness measurements of spaces are not acceptable.

2.6.3 At each Intermediate Survey for hull, in addition to all the requirements for Annual Survey in 2.5, the following additional applicable requirements in 2.6.4 are also to be complied with depending on the type of ship.

2.6.4 Additional hull requirements for ships other than tankers, combination carriers and bulk carriers

(a) For ships between 5 and 10 years of age, a general, internal examination of representative ballast tanks is to be carried out. If there is no hard protective coating, soft or semi-hard coating, or POOR coating condition, the examination is to be extended to other ballast spaces of the same type.

(b) For ships over 10 years of age, a general, internal examination of all spaces used for water ballast is to be carried out.

(c) If such examinations, in 2.6.4(a) and (b) above, reveals no visible structural defects, the examination may be limited to a verification that the coatings remain efficient.

(d) For ballast tanks, excluding double bottom tanks, if there is no hard protective coating, soft or semi-hard coating or Poor coating condition and it is not renewed, the spaces in question are to be internally examined at annual intervals.

(e) When such conditions, in 2.6.4(d) above, are found in water ballast double bottom tanks, the spaces in question may be internally examined at annual intervals.

(f) In the case of dry cargo ships over 15 years old, other than bulk carriers subject to 2.12 or 2.15 or general dry cargo ships subject to 2.9 of this Chapter, an internal examination of selected cargo holds is to be carried out.

(g) In the case of ships over 10 years of age, other than ships engaged in the carriage of dry cargoes only or ships subject to 2.10(LGC), 2.11(OT), 2.13(CT), or 2.14(DHOT) of this Chapter, an internal examination of selected cargo spaces is to be carried out.

(h) For fishing ships over 15 years of age, an overall survey of at least 2 fish holds, where applicable, is to be carried out.

2.6.5 Intermediate Survey – machinery

(a) At each Intermediate Survey, all the requirements for Annual Survey are to be complied with.

(b) For tankers, in addition to the above, insulation resistance of electrical circuits in dangerous spaces is to be measured. Consideration may be given to accept the recent readings by the crew.

2.6.6 Intermediate Survey – marine oil pollution prevention installations

Marine oil pollution prevention installations including operation tests as far as practicable are to be surveyed according to the IMO Resolution A.1053(27) – Guidelines for Surveys under Annex 1 of MARPOL 73/78 with its amendments. Surveys carried out by the National Authorities of the countries in which the ships are registered may be accepted as meeting these requirements.

2.7 Special Surveys

Procedures for class related services, see 2.1.4 of this Chapter.

Provision for surveys, see 2.1.5 of this Chapter. A survey planning meeting is to be held prior to the commencement of the survey, see 2.1.6(b) of this Chapter.

Concurrent crediting to both Intermediate Survey (IS) and Special Survey (SS) for surveys and thickness measurements of spaces are not acceptable.

2.7.1 Special Survey - hull

All Annual Survey requirements together with the following are to be complied with:

(a) The examinations of the hull are to be supplemented by thickness measurements and testing as required in 2.7.1(j) and 2.7.1(k), to ensure that the structural integrity remains effective. The aim of the examination is to discover Substantial Corrosion, significant deformation, fractures, damages or other structural deterioration, that may be present.

(b) A Bottom Survey in dry dock in accordance with the requirements of 2.2.1 of this Chapter is to be carried out as part of the Special Survey.

(c) The anchors and chain cables are to be ranged, examined and the required complement and condition verified. The chain locker holdfasts, hawse pipes and chain stoppers are to be examined and pumping arrangements of the chain locker tested.

At Special Survey No. 2 and subsequent Special Surveys, chain cables are to be gauged and renewed in cases where their mean diameter is 12% worn below the requirement limits allowed by the Society.

(d) All spaces including holds and their tween decks where fitted; double bottom, deep, ballast, peak and cargo tanks; pumprooms, pipe tunnels, duct keels, machinery spaces, dry spaces, cofferdams and voids are to be internally examined including the plating and framing, bilges and drain wells, sounding, venting, pumping and drainage arrangements.

Internal examination of fuel oil, lube oil and fresh water tanks is to be carried out in accordance with Table I 2-1.

At Special Survey No.3 and subsequent Special Surveys, structural downflooding ducts and structural ventilation ducts are to be internally examined.

(e) Engine room structure is to be examined. Particular attention is to be given to tank tops, shell plating in way of tank tops, brackets connecting side shell frames and tank tops, and engine room bulkheads in way of tank top and bilge wells. Particular attention is to be given to the sea suctions, sea water cooling pipes and overboard discharge valves and their connections to the shell plating. Where wastage is evident or suspect, thickness measurements are to be carried out, and renewals or repairs made when wastage exceeds allowable limits.

(f) Where provided, the condition of corrosion prevention system of ballast tanks is to be examined. For ballast tanks, excluding double bottom tanks, where a hard protective coating is found in POOR condition and it is not renewed, where soft or semi-hard coating has been applied, or where a hard protective coating was not applied from time of construction, the tanks in question are to be examined at annual intervals. Thickness measurements are to be carried out as deemed necessary by the Surveyor.

(g) When such breakdown of hard protective coating is found in double bottom ballast tanks and it is not renewed, where a soft or semi-hard coating has been applied, or where a hard protective coating was not applied from the time of construction, the tanks in question may be examined at annual intervals. When considered necessary by the Surveyor, or where extensive corrosion exists, thickness measurements are to be carried out.

(h) Extent of Tank Testing

(i) Boundaries of double-bottom, deep, ballast, peak, and other tanks, including holds adapted for the carriage of salt water ballast, are to be tested with a head of liquid to the top of air pipes or to near the top of hatches for ballast/cargo holds.

(ii) Boundaries of fuel oil, lube oil and fresh water tanks are to be tested with a head of liquid to the highest point that liquid will rise under service conditions.

(iii) Tank testing of fuel oil, lube oil and fresh water tanks may be specially considered based on a satisfactory external examination of the tank boundaries, and a confirmation from the Master stating that the pressure testing has been carried out according to the requirements with satisfactory results. The Surveyor may extend the testing as deemed necessary.

(i) Hatch covers and coamings are to be surveyed as follows:

(i) A thorough inspection of the items listed in 2.5.1(a), including close-up survey of hatch cover plating and hatch coaming plating, is to be carried out.

Subject to cargo hold hatch covers of approved design which structurally have no access to the internals, close-up survey shall be done of accessible parts of hatch covers structures.

(ii) Checking of the satisfactory operation of all mechanically operated hatch covers is to be made, including:

(1) Storage and securing in open condition;

(2) Proper fit and efficiency of sealing in closed condition;

(3) Operational testing of hydraulic and power components, wires, chains, and link drives;

(iii) Checking the effectiveness of sealing arrangements of all hatch covers by hose testing or equivalent is to be carried out.

(j) Thickness measurements are to be carried out in accordance with Table I 2-3A. The Surveyor may extend the thickness measurements as deemed necessary. When thickness measurements indicate substantial corrosion, the extent of thickness measurements is to be increased to determine areas of substantial corrosion. Table I 2-4A may be used as guidance for these additional thickness measurements. These extended thickness measurements are to be carried out before the survey is credited as completed.

(k) All bilge and ballast piping systems are to be examined and operationally tested to working pressure to the attending Surveyor's satisfaction to ensure that tightness and condition remain satisfactory.

(l) For all ships except for passenger ships, automatic air pipe heads are to be completely examined (both externally and internally) as indicated in Table I 2-23.
For designs where the inner parts cannot be properly inspected from outside, this is to include removal of the head from the air pipe. Particular attention is to be paid to the condition of the zinc coating in heads constructed from galvanized steel.

(m) In refrigerated cargo spaces, the condition of the coating and structure behind the insulation is to be examined at representative locations. The Surveyors may limit the examination to the verification that the protective coating remains effective and that there are no visible structural defects. Where POOR coating condition is found, or structural defects are identified, then sufficient insulation is to be removed in each of the chambers in order to assess the condition of the remaining structure, as deemed necessary by the Surveyor. Additionally, where indents, scratches or other defects are identified during the survey of the shell plating from the outside, insulations in way are to be removed to enable further examination of the plating and adjacent frames, as required by the Surveyor.

(n) Gangways, accommodation ladders with accessory wires, winches and gears are to be load tested and operationally tested with maximum operational load.

(o) Bow doors, inner doors, side shell doors and stern doors are to be surveyed as per Special Survey, see IACS UR Z24-3.

(p) Where the special equipment notation **CSS** is assigned, the Surveyor is to be satisfied as to the efficient condition of:

(i) Cell guide structure including the connections between vertical cell guides and cross ties.

(ii) Cell guide entry devices.

(iii) Portable frameworks or other forms of structural restraints.

(iv) Fittings attached to the ship structure, with special attention to any signs of leakage in way of tanks or deck and shell plating.

(v) End connecting pieces for lashings, twist locks and other loose fittings, which are to be examined and verified with the Register, see chapter 9 of "Guidelines for of Container Securing Systems".

(vi) Lashings, rods, wire ropes, and chains together with turn buckles and other tightening devices are to be examined and verified with the records prepared by crew as far as necessary and practicable in order to be satisfied as to their general condition, see chapter 9 of "Guidelines for Container Securing Systems".

(vii) Lashing wire ropes, which are to be renewed where more than 5% of the wires are broken, worn or corroded in any length of 10 diameters of the wire rope.

(viii) Chains, which are to be renewed where worn or damaged.

Where renewals are required, the new item is to be of approved type and manufacture. Where test certificates are not available, the item is to be tested in accordance with charpter 7 of "Guidelines for Container Securing Systems".

2.7.2 Special Survey–machinery

(a) Pumps and the pumping system including valves, cocks, pipes and strainers are to be examined. For hydraulic power units, records of hydraulic oil replacement are to be checked. Oil samples for analysis may be required at the discretion of the Society. Other systems are to be tested if considered necessary.

(b) All shafts (except propeller and stern tube shafts which are detailed in propeller shaft survey), thrust blocks, line shaft bearings are to be opened up for examination. The lower halves of bearings need not be exposed if alignment and wear are found acceptable.

(c) Steering machinery including auxiliary arrangement is to be examined and operation tested. The machinery may be opened up for examination if deemed necessary by the Surveyor.

(d) Holding down bolts and chocks of main and auxiliary engines and shafting bearing blocks are to be examined.

(e) All air vessels for essential services, together with their mountings, valves and safety devices, are to be cleaned internally, and examined internally and externally. If internal examination of the air vessels is not practicable, they are to be tested hydraulically to at 1.25 times the working pressure. Safety valves setting are to be checked.

(f) Fuel tanks which do not form part of ship's structure together with their fittings are to be examined and, if deemed necessary by the Surveyor, they are to be tested as specified for new tanks.

(g) The reduction gears are to be examined, and opened up if deemed necessary by the Surveyor, in order to confirm the condition of the gears, pinions, gear teeth, spiders, shafts, bearings and lubrication system. Alternative means of accertaining the condition of epicyclic gearing will be specially considered.

(h) The machinery and heat exchangers which are not included in the boiler survey requirements are to be examined and opened up for further examination if deemed necessary by the Surveyor.

(i) The windlass and mooring winches are to be examined including operation test. They are to be opened up for examination if deemed necessary by the Surveyor.

(j) The bilge system including valves, cocks, strainers and bilge injections are to be opened up for examination if deemed necessary by the Surveyor. The system is to be tested in working condition.

(k) Air compressors of essential services are to be examined visually without dismantling. Performance test shall be carried out. They are to be opened up for examination if deemed necessary by the sureveyor. Verify last overhaul records.. Safety valve setting is to be checked.

(l) Evaporators are to be opened up and examined. Safety valve settings are to be checked.

(m) Main and auxiliary engines are to be tested in working condition if deemed necessary by the Surveyor.

(n) Engine room remote control quick closing valves are to be examined visually without dismantling. Performance test shall be carried out. They are to be opened up for examiniation if deemed necessary by the Surveyor. Verify last overhaul records.

(o) Feed pumps, burning pumps and boiler water circulating pumps for boilers are to be opened up and examined.

(p) Steam turbines

In addition to the foregoing items (a) to (o) of 2.7.2 above, steam turbines used as main and auxiliary engines are to be examined as follows:

(i) Steam turbine blades, rotors, stop valves, shafts glands, thrust and adjusting bearings together with oil drains and sealing pipes are to be examined.

(ii) Exhaust steam turbines, gears, clutches, and electric motors are to be opened up and examined; coned ends of internal driving shafts are to be examined.

(iii) For main steam pipes, a selected section is to be removed and examined when they are 12 years old and thenceforth at each Special Survey. Sufficient lagging is to be removed for examination and hydraulically tested to twice the working pressure. When deemed necessary by the Surveyor the thickness of pipes is to be ascertained to determine the future working pressure.

(iv) Condensers are to be examined and tested if repaired.

(v) Safety devices are to be examined and tested.

(q) Diesel engine

(i) In addition to the foregoing items (a) to (o) of 2.7.2 above, diesel engines used as main and auxiliary engines are to be examined as follows:

Cylinders, covers, valves and valve gears, pistons, piston rod, crossheads, guides, connecting rods, crankshafts and all bearings, crankcases, bed-plates, entablatures, crankcase door fastenings and explosion relief devices, scavenge pumps, scavenge blowers, superchargers and their associated coolers, air compressors and their intercoolers, filters and/or separators and safety devices, fuel injection pumps and fittings, camshaft drives and balancer units, torsional vibration dampers or de-tuners, flexible couplings, clutches, reverse gears, attached pumps and cooling arrangements are to be examined.

Special consideration as to the requirements for Special Surveys may be given for diesel engines with bores 300 mm or under, provided the engine is maintained under a manufacturer's scheduled maintenance program.

(1) The records of the program, including lubrication servicing, are to be made available to the Surveyor. Periodical overhauls, required by the manufacturer's scheduled maintenance program, are to be witnessed by the Surveyor.

(2) For ships not engaged in international voyages, the survey may be carried out by reviewing the records of the program and other effective means, such as the verification runs specified in (s) of 2.7.2 below, to confirm that engines are in good order. Periodical overhauls, required by the manufacturer's scheduled maintenance program, are to be witnessed by the Surveyor.

(ii) Tie rods are to be re-tensioned, as necessary. Engine entablature bolting is to be checked for tightness, and crankshaft deflections of medium-speed and low-speed type engines are to be measured and placed in good order.

(r) Electrical installations.

(i) The survey is to comprise examination of the electrical installation with regard to fire and explosion hazards and injury from accidental touching. The survey is also to include testing of correct functioning of equipment covered by the requirements of the Rules.

(ii) As far as practicable, the following equipment is to be examined for satisfactory condition:

(1) Main and emergency switchboards.

(2) Generators.

(3) Distribution boards.

(4) Motor starters.

(5) Electrical motors.

(6) Converters (e.g. transformers, rectifiers, chargers).

(7) Cable installations.

(8) Enclosures for electrical equipment.

(9) Lighting equipment.

(10) Heating equipment.

(11) Battery installation.

(iii) The following are to be tested to the extent deemed necessary by the Surveyor to ascertain the proper functioning of the equipment:

(1) Generator load test.

(2) Generator parallel operation.

(3) Generator protection relays.

(4) Generator remote speed control.

(5) Generator synchronizing equipment.

(6) Power plant interlocking systems.

(7) Insulation resistance indicating device.

(8) Emergency generator including switchboard.

(9) Battery chargers.

(10) Mechanical ventilation of battery rooms /lockers.

(11) Navigation lights, with controllers including alarms.

(iv) Measurements of insulation resistance on main and emergency switchboards, generators, exciters, propulsion motors if the ship is of electrical propulsion and all electrical installations and their wiring are to be performed as follows:

Part to be tested	Insulation resistance	
Switchboard with all out-going circuit breakers and switches opened, and control and measuring instrument disconnected	Between each busbar, and busbar to hull	1 megohm
Generator and motor	Each generator or motor to hull	1,000 times the rated voltage of the machine in ohms
All wiring measured from switchboard with circuit breakers and protective devices closed, except those of the generator	Between each conductor and conductor to hull	100,000 ohms

(v) Tests of emergency stopping means of all oil transfer systems, and boiler and engine room ventilations are to be performed.

(vi) Where the ship is electrically propelled, the propulsion motors, generators, propulsion transformers, propulsion conversion equipment, cables, harmonic filters, neutral earthing resistors, dynamic braking resistors and all ancillary electrical equipment that forms part of the propulsion drive and control system, exciters and ventilating plant (including coolers) associated therewith are to be surveyed, and the insulation resistance to earth is to be tested. Special attention is to be given to windings, commutators and slip rings. Where practicable, the low voltage and high voltage windings of cast resin propulsion transformers are to be subjected to boroscopic inspection, to assess the physical condition of their insulation and for signs of mechanical and thermal damage. The operation of protective gear and alarm devices is to be checked, so far as practicable. Insulating oil, if used, is to be tested in accordance with 2.7.2(r)(vii). Interlocks intended to prevent unsafe operations or unauthorised access are to be checked to verify that they are functioning correctly. Emergency overspeed governors are to be tested.

(vii) Where transformers associated with supplies to essential services are liquid-immersed, the Owner is to arrange for samples of the liquid to be taken and tested for dissolved gases, breakdown voltage, acidity and moisture by a competent testing authority, in accordance with the equipment manufacturer's requirements, and a certificate giving the test results is to be made available to the Surveyor on request.

(s) Machinery verification runs for ships not engaged in international voyages

As part of the Special Survey of Machinery, a dock trial in the presence of the Surveyor is to be carried out in order to confirm satisfactory operation of main and auxiliary machinery. A sea trial may be carried out if deemed necessary by the Surveyor.

If significant repairs are carried out to main or auxiliary machinery or steering gear, consideration should be given to a sea trial to the satisfaction of the Surveyor.

2.7.3 Special Survey – **CAS**

The following are to be performance tested and placed in order:

(a) Main propulsion machinery and controllable pitch propellers

(i) Change-over devices of control positions between main control station and local control station.

(ii) Safety devices.

(b) Boilers

(i) Automatic and remote control systems.

(ii) Safety devices.

(c) Electric generating sets

(i) Automatic and remote control systems.

(ii) Safety devices.

(d) Automatic change-over devices (or remote start/stop devices) of essential pumps and automatic starting devices (or remote start/stop devices) of air compressors.

(e) Alarm systems
  (i) Function of alarm systems and indicator devices.
  (ii) Confirmations of setting points of alarms.

(f) Remote control and monitoring systems

2.7.4 Special Survey – **CAU**, **CAB**

The following are to be performance tested and placed in order:

(a) Main propulsion machinery and controllable pitch propellers
  (i) Change-over devices of control positions between navigation bridge and main control station and between main control station and local control station, or between main monitoring and control station on bridge and local station or sub-control station.
  (ii) Safety devices.

(b) Boilers
  (i) Automatic and remote control systems.
  (ii) Safety devices.

(c) Electric generating sets
  (i) Automatic and remote control systems.
  (ii) Safety devices.
  (iii) Automatic start of stand-by power supply unit after black-out, where applicable.

(d) Automatic change-over devices of essential pumps and automatic starting devices (or remote start/stop devices) of air compressors.

(e) Communication systems specified in 2.9 of Part VIII of the Rules.

(f) Alarm systems
  (i) Function of alarm systems and indicator devices.
  (ii) Confirmations of setting points of alarms.

(g) Remote control and monitoring systems

Where considered necessary by the Surveyor, sea trials may be required upon completion of the above mentioned tests.

2.7.5 Special Survey – marine oil pollution prevention installations

Marine oil pollution prevention installations including operation tests as far as practicable are to be surveyed according to the IMO resolution A.1053(27) – Guidelines for Surveys under Annex I of MARPOL 73/78 with its amendments. Surveys carried out by the National Authorities of the countries in which the ships are registered may be accepted as meeting these requirements.

2.8 Classification Survey of Ships not Built under Survey

2.8.1 The following drawings and documents, necessary for classification purpose, are to be submitted as far as practicable together with the application for classification:

(a) Hull
  (i) General arrangement.
  (ii) Mid-ship section.

(iii) Scantling profile and deck plans.
(iv) Shell expansion.
(v) Capacity plan.
(vi) Piping and pumping diagrams.
(vii) Rudder and stern frames.
(viii) Data of chain cable and anchor.
(ix) Lines and hydrostatic curves (if freeboard assignment is required).
(x) Lumber storage plan (if timber freeboard assignment is required).
(xi) Loading and stability information (i.e. loading manual).
(xii) Outfitting arrangement of ship's side fittings.
(xiii) Inert gas system (if required to be installed).
(xiv) COW system (if required to be installed).

(b) Machinery
(i) Engine room arrangement.
(ii) Piping system in engine room.
(iii) Detail and arrangement of propulsion shafting.
(iv) Machinery particulars.
(v) General arrangement of electric equipment.
(vi) Electric wiring diagram of power, lighting and interior communication system.
(vii) Electric equipment particulars.
(viii) Main switchboard.

(c) **CAS/CAU/CAB**
(i) Machinery arrangement plans showing location of control stations in relation to controlled units.
(ii) Arrangements and details of control consoles including front view, installation arrangements together with schematic diagrams for all power, control and monitoring systems including their functions.
(iii) Kinds and sizes of all electrical cables and wiring associated with control systems including voltage rating, service voltage and currents together with overload and short circuit protection.
(iv) Schematic plans of hydraulic and pneumatic control systems together with all interconnections, piping sizes and materials including working pressures and relief valve settings.
(v) Description of all alarms and emergency tripping arrangements, functional sketches or description of all special valves, actuators, sensors and relays.
(vi) Schematic plans and supporting data of fire protection and extinguishing systems, including fire detection and alarm system, bilge high water level alarms.

(d) Cargo refrigerating machinery and installations
(i) General arrangement of the insulated chamber in elevation and plan.
(ii) Drainage arrangement and detail of non-return trap.
(iii) Arrangement of air ducts, fan coolers and thermometers.
(iv) General arrangement of the refrigerating machinery.
(v) Piping diagram of primary and secondary refrigerant systems including full particulars of safety devices, valves and pipes.
(vi) Electric wiring diagram.
(vii) The log book of the refrigerating machinery for the preceding years is to be submitted for investigation.
(viii) Weights and descriptions of cargoes required to be cooled down in each chamber.
(ix) Proposed time required for cooling down.
(x) Initial temperature at which the cargo is to be loaded.

(xi) Carrying temperature of the cargo in refrigerated chamber.

(xii) Proposed air circulation and fresh air quantity required to cool down refrigerated chamber.

2.8.2 Ships without classification

For the ships which have not been classed with any other Classification Society, all surveys to the extent as specified in the Rules, are to be carried out by the Surveyor who is to take into account the age, the standard of construction, the past maintenance, and the present status of the ships concerned.

2.8.3 Ships with classification

If the ship keeps the Class of another recognized Classification Society with sufficient status, in general, a survey to the extent of the Special Survey corresponding to the ship's age is to be conducted. Some Special Survey items may be omitted by the Surveyor in view of the ship's condition. In such case, the period of class is to remain as assigned by the previous Classification Society.

2.8.4 Subsequent surveys

Subsequent surveys are to be carried out as in the case of ships built under survey.

2.9 Hull Surveys of General Dry Cargo Ships

2.9.1 General

Procedures for class related services, see 2.1.4 of this Chapter. Provision for surveys, see 2.1.5 of this Chapter.

(a) The requirements apply to all self-propelled general dry cargo ships of 500 gross tonnage and above carrying solid cargoes other than (see Note 1):

- ships subject to 2.12 or 2.15 of this Chapter;
- dedicated container carriers;
- ro-ro cargo ships;
- refrigerated cargo ships;
- dedicated wood chip carriers;
- dedicated cement carriers;
- livestock carriers;
- deck cargo ships (see Note 2);
- general dry cargo ships of double-side skin construction, with double-side skin extending for the entire length of the cargo area, and for the entire height of the cargo hold to the upper deck.

Note 1: The requirements of paragraphs 2.9.2(g) and 2.9.4(h) also apply to those cargo ships, which, although belonging to the ship types listed in 2.9.1(a) above that are excluded from the application of this requirements , are fitted with a single cargo hold.

Note 2: A deck cargo ship is a ship that is designed to carry cargo exclusively above deck without any access for cargo below deck.

(b) For General Dry Cargo Ships with hybrid cargo hold arrangements, e.g. with some cargo holds of single-side skin and others of double-side skin, the requirements herein are to be applied only to structure in way of the single-side skin cargo hold region.

(c) The requirements apply to surveys of hull structure and piping systems in way of cargo holds, cofferdams, pipe tunnels, void spaces and fuel oil tanks within the cargo area and all ballast tanks. The requirements are additional to the classification requirements applicable to the remainder of the ship. Refer to 2.5~2.7 of this Chapter.

(d) The requirements contain the minimum extent of examination, thickness measurements and tank testing. The survey is to be extended when Substantial Corrosion and/or structural defects are found and include additional close-up survey when necessary.

2.9.2 Annual Survey

(a) General

(i) In addition to the applicable requirements of the Annual Survey in 2.5, those items herein are to be carried out.

(ii) Annual Survey is to consist of an examination for the purpose of ensuring, as far as practicable, that the hull, hatch covers, coamings and piping are maintained in a satisfactory condition.

(b) Examination of the hull

(i) Examination of the hull plating and its closing appliances as far as can be seen.

(ii) Examination of watertight penetrations as far as practicable.

(c) Examination of weather decks, hatch covers and coamings

(i) Confirmation is to be obtained that no unapproved changes have been made to the hatch covers, hatch coamings and their securing and sealing devices since the last survey.

(ii) Where mechanically operated steel covers are fitted, checking the satisfactory condition of:

(1) Hatch covers; including close-up survey of hatch cover plating;

(2) Tightness devices of longitudinal, transverse and intermediate cross junctions (gaskets, gaskets lips, compression bars, drainage channels);

(3) Clamping devices, retaining bars, cleating

(4) chain or rope pulleys;

(5) Guides;

(6) Guide rails and track wheels;

(7) Stoppers, etc.;

(8) Wires, chains, gypsies, tensioning devices;

(9) Hydraulic system essential to closing and securing; and

(10) Safety locks and retaining devices.

(iii) Where portable covers, wooden or steel pontoons are fitted, checking the satisfactory condition where applicable of:

(1) Wooden covers and portable beams, carriers or sockets for the portable beams, and their securing devices;

(2) Steel pontoons, including close-up survey of hatch cover plating;

(3) Tarpaulins;

(4) Cleats, battens and wedges;

(5) Hatch securing bars and their securing devices;

(6) Loading pads/bars and the side plate edge;

(7) Guide plates and chocks; and

(8) Compression bars, drainage channels and drain pipes (if any).

(iv) Checking the satisfactory condition of hatch coaming plating and their stiffeners including close-up survey.

(v) Random checking of the satisfactory operating of mechanically operated hatch covers is to be made including:

(1) Stowage and securing in open condition;

(2) Proper fit and efficiency of sealing in closed condition; and

(3) Operational testing of hydraulic and power components, wires, chains and link drives.

(vi) Examination of the weld connection between air pipes and deck plating.

(vii) External examination of all air pipe heads installed on the exposed decks.

(viii) Examination of flame screens on vents to all bunker tanks.

(ix) Examination of ventilators, including closing devices, if any.

(d) Suspect Areas

Suspect Areas identified at previous surveys are to be examined. Thickness measurements are to be taken of the area of Substantial Corrosion and the extent of thickness measurement is to be increased to determine the extent of Substantial Corrosion. Table I 2-4A may be used for these additional thickness measurements. These extended thickness measurements are to be carried out before the Annual Survey is credited as completed.

(e) Examination of cargo holds

(i) For Ships 10-15 years of age, the following is to apply:

(1) Overall survey of one forward and one after cargo hold and their associated tween deck spaces.

(2) When considered necessary by the Surveyor, or where extensive corrosion exists, thickness measurement is to be carried out. If the results of these thickness measurements indicate that Substantial Corrosion is found, then the extent of thickness measurements is to be increased to determine the extent of areas of substantial corrosion. Table I 2-4A may be used as guidance for these additional measurements. These extended thickness measurements are to be carried out before the Annual Survey is credited as completed.

(ii) For Ships over 15 years of age, the following is to apply:

(1) Overall survey of all cargo holds and tween deck spaces.

(2) Close-up examination of sufficient extent, minimum 25% of frames, to establish the condition of the lower region of the shell frames including approx. lower one third length of side frame at side shell and side frame end attachment and the adjacent shell plating in a forward lower cargo hold and one other selected lower cargo hold. Where this level of survey reveals the need for remedial measures, the survey is to be extended to include a close-up survey of all of the shell frames and adjacent shell plating of those cargo holds and associated tween deck spaces (as applicable) as well as a close-up survey of sufficient extent of all remaining cargo holds and tween deck spaces (as applicable).

(3) When considered necessary by the Surveyor, or where extensive corrosion exists, thickness measurement is to be carried out. If the results of these thickness measurements indicate that Substantial Corrosion is found, then the extent of thickness measurements is to be increased to determine the extent of areas of substantial corrosion. Table I 2-4A may be used as guidance for these additional measurements. These extended thickness measurements are to be carried out before the Annual Survey is credited as completed.

(4) Where the protective coating in cargo holds, as applicable, is found to be in GOOD condition the extent of close-up surveys may be specially considered.

(5) All piping and penetrations in cargo holds, including overboard piping, are to be examined.

(f) Examination of ballast tanks

Examination of ballast tanks when required as a consequence of the results of the Special Survey and Intermediate Survey is to be cacrried out. When considered necessary by the Surveyor, or where extensive corrosion exists, thickness measurements are to be carried out. If the results of these thickness measurements indicate that Substantial Corrosion is found, then the extent of thickness measurements is to be increased to determine the extent of Substantial Corrosion. Table I 2-4A may be used as guidance for these additional measurements. These extended thickness measurements are to be carried out before the Annual Survey is credited as completed.

(g) Additional requirements for single hold cargo ships (see Note 1 of 2.9.1(a)) after determining compliance with SOLAS II-I/23-3 and II-I/25

(i) For ships complying with the requirements of SOLAS II-I/23-3 and II-I/25 for hold water level detectors, the Annual Survey is to include an examination and a test, at random, of the water ingress detection system and of their alarms.

2.9.3 Intermediate Survey

(a) General

(i) At each Intermediate Survey, in addition to the requirements of the Annual Survey in 2.9.2 and the applicable requirements of the Intermediate Survey in 2.6, the following items are to be surveyed.

(ii) A survey planning meeting is to be held prior to the commencement of the survey.

(iii) Concurrent crediting to both Intermediate Survey (IS) and Special Survey (SS) for surveys and thickness measurements of spaces are not acceptable.

(b) The survey extent is dependent on the age of the vessel as specified in 2.9.3(b)(i) to 2.9.3(b)(iii).

(i) Ships 5-10 Years of Age, the following is to apply:

(1) Ballast Tanks

a) For tanks used for water ballast, an overall survey of Representative Tanks selected by the Surveyor is to be carried out. If such overall survey reveals no visible structural defects, the examination may be limited to a verification that the corrosion prevention system remains efficient.

b) Where POOR coating condition, soft or semi-hard coating, corrosion or other defects are found in water ballast tanks or where a hard protective coating was not applied from the time of construction, the examination is to be extended to other ballast tanks of the same type.

c) In water ballast tanks other than double bottom tanks, where a hard protective coating is found in POOR condition, and it is not renewed, where soft or semi-hard coating has been applied, or where a hard protective coating was not applied from time of construction, the tanks in question are to be examined and thickness measurements carried out as considered necessary at annual intervals. When such breakdown of hard protective coating is found in water ballast double bottom tanks, where a soft or semi-hard coating has been applied, or where a hard protective coating has not been applied, the tanks in question may be examined at annual intervals. When considered necessary by the Surveyor, or where extensive corrosion exists, thickness measurements are to be carried out.

d) In addition to the requirements above, areas found suspect at previous surveys are to be surveyed in accordance with the provisions indicated in 2.9.2(d).

(2) Cargo Holds

a) An overall survey of all cargo holds and tween deck spaces.

b) Areas found suspect at previous surveys are to be surveyed in accordance with the provisions indicated in 2.9.2(d).

(ii) Ships 10-15 Years of Age, the following is to apply:

(1) Ballast Tanks

a) For tanks used for water ballast, an overall survey of all tanks is to be carried out. If such overall survey reveals no visible structural defects, the examination may be limited to a verification that the corrosion prevention system remains efficient.

b) The requirements of 2.9.3(b)(i)(1)c) and d) also apply .

(2) Cargo Holds

a) An overall survey of all cargo holds and tween deck spaces.

b) Areas found suspect at previous surveys are to be surveyed in accordance with the provisions indicated in 2.9.2(d).

c) When considered necessary by the Surveyor, or where extensive corrosion exists, thickness measurement is to be carried out. If the results of these thickness measurements indicate that Substantial Corrosion is found, then the extent of thickness measurements is to be increased to determine the extent of areas of substantial corrosion. Table I 2-4A may be used as guidance for these additional measurements. These extended thickness measurements are to be carried out before the survey is credited as completed.

(iii) Ships over 15 Years of Age, the following is to apply:

(1) The requirements of the Intermediate Survey are to be to the same extent as the previous Special Survey as required in 2.9.4, except for item 2.c. in column 4 of Table I 2-11. However, tank testing specified in 2.9.4(g), survey of automatic air pipe heads (see Notes in 2.9.4(a)(vi) and 2.9.4(e)(iv)) and internal examination of fuel oil, lube oil and fresh water tanks (see 2.9.3(e)(i)) are not required unless deemed necessary by the attending Surveyor.

(2) In application of 2.9.3(b)(iii)(1) above, the Intermediate Survey may be commenced at the second Annual Survey and be progressed during the succeeding year with a view to completion at the third Annual Survey in lieu of the application of Part I-1.6.4(b)&(c).

(3) In lieu of the requirements of 2.9.4(b), an In-water survey, according to the provisions of item 2.2.2 of this Chapter, may be considered as equivalent.

2.9.4 Special Survey

(a) General

(i) A survey planning meeting is to be held prior to the commencement of the survey.

(ii) Concurrent crediting to both Intermediate Survey (IS) and Special Survey (SS) for surveys and thickness measurements of spaces are not acceptable.

(iii) The Special Survey is to include, in addition to the requirements of the Annual Survey in 2.9.1 and the applicable requirements of the Special Survey in 2.7, examination, tests and checks of sufficient extent to ensure that the hull and related piping, as required in 2.9.4(a)(v) are in a satisfactory condition and fit for the intended purpose for the new period of class of 5 years to be assigned, subject to proper maintenance and operation and to periodical surveys being carried out at the due dates.

(iv) All cargo holds, water ballast tanks including double bottom tanks, pipe tunnels, cofferdams and void spaces bounding cargo holds, decks and outer hull are to be examined and this examination is to be supplemented by thickness measurement and testing as required in 2.9.4(f) and 2.9.4(g) to ensure that the structural integrity remains effective. The aim of the examination is to be sufficient to discover Substantial Corrosion, significant deformation, fractures, damages or other structural deterioration that may be present.

(v) All piping systems within the above spaces are to be examined and operationally tested to working pressure to attending Surveyor's satisfaction to ensure that tightness and condition remain satisfactory.

(vi) The survey extent of ballast tanks converted to void spaces is to be specially considered in relation to the requirements for ballast tanks.

Note: For survey of automatic air pipe heads refer to Table I 2-23.

(b) Bottom Survey in dry dock

A Bottom Survey in dry dock is to be a part of the Special Survey. The overall and close-up surveys and thickness measurements, as applicable, of the lower portions of the cargo holds and water ballast tanks(1) are to be carried out in accordance with the applicable requirements for Special Surveys, if not already performed.

Note:

(1) Lower portions of the cargo holds and ballast tanks are considered to be the parts below light ballast water line.

(c) Tank protection

(i) Where provided, the condition of the corrosion prevention system of ballast tanks is to be examined. For tanks used for water ballast, excluding double bottom tanks, where a protective coating is found in Poor condition and it is not renewed, where a soft or semi-hard coating has been applied, or where a protection coating was not applied from the time of construction, the tank in question is to be examined at annual intervals. Thickness measurements are to be carried out as deemed necessary by the Surveyor.

(ii) When such breakdown of coating is found in water ballast double bottom tanks and it is not renewed, where a soft or semi-hard coating has been applied, or where a protective coating was not applied from the time of construction, the tank in question is to be examined at annual intervals. When deemed

necessary by the Surveyor, or where extensive corrosion exists, thickness measurements are to be carried out.

(iii) Where the hard protective coating in spaces is found to be in Good condition, the extent of close-up surveys and thickness measurements may be specially considered.

(d) Hatch covers and coamings

The hatch covers and coamings are to be surveyed as follows:

(i) A thorough inspection of the items listed in 2.9.2(c) is to be carried out.

(ii) Checking of the satisfactory operation of all mechanically operated hatch covers is to be made, including:

(1) Stowage and securing in open condition;

(2) Proper fit and efficiency of sealing in closed condition; and

(3) Operational testing of hydraulic and power components, wires, chains and link drives.

(iii) Checking the effectiveness of sealing arrangements of all hatch covers by hose testing or equivalent.

(iv) Close-up survey and thickness measurement of the hatch cover and coaming plating and stiffeners is to be carried out as given in Table I 2-10 and Table I 2-11, and the the thickness measurement of hatch cover and coaming plating in way of Substantial Corrosion is to be carried out as given in Table I 2-4A.

(e) Extent of overall and close-up survey

(i) An overall survey of all tanks and spaces, excluding fuel oil, lube oil and fresh water tanks, is to be carried out at each Special Survey.

Note: For fuel oil, lube oil and fresh water tanks, reference is to be made to Table I 2-1.

(ii) The minimum requirements for close-up surveys at Special Survey are given in Table I 2-10.

(iii) The Surveyor may extend the close-up survey as deemed necessary taking into account the maintenance of the spaces under survey, the condition of the corrosion prevention system and where spaces have structural arrangements or details which have suffered defects in similar spaces or on similar ships according to available information.

(iv) For areas in spaces where hard protective coatings are found to be in a GOOD condition, the extent of close-up surveys according to Table I 2-10 may be specially considered.

Note: For survey of automatic air pipe heads, reference is to be made to Table I 2-23.

(f) Extent of thickness measurement

(i) The minimum requirements for thickness measurements at Special Survey are given in Table I 2-11.

(ii) The Surveyor may extend the thickness measurements as deemed necessary. When thickness measurements indicate Substantial Corrosion, the extent of thickness measurements is to be increased to determine the extent of areas of Substantial Corrosion. Table I 2-4A may be used as guidance for these additional thickness measurements.

(iii) For areas in spaces where hard protective coatings are found to be in a GOOD condition, the extent of thickness measurement according to Table I 2-11 may be specially considered.

(iv) Transverse sections are to be chosen where the largest reductions are suspected to occur or are revealed from deck plating measurements.

(g) Extent of tank testing

(i) All boundaries of water ballast tanks and deep tanks used for the water ballast within the cargo length area are to be pressure tested. For fuel oil tanks, only representative tanks are to be pressure tested.

(ii) The Surveyor may extend the tank testing as deemed necessary.

(iii) Tank testing of fuel oil tanks is to be carried out with a head of liquid to the highest point that liquid will rise under service conditions. Tank testing of fuel oil tanks may be specially considered based on a satisfactory external examination of the tank boundaries, and a confirmation from the Master stating that the pressure testing has been carried out according to the requirements with satisfactory results.

(h) Additional requirements for single hold cargo ships after determining compliance with SOLAS II-I/23-3 and II-I/25.

(i) For ships complying with the requirements of SOLAS II-I/23-3 and II-I/25 for hold water level detectors, the Special Survey is to include an examination and a test of the water ingress detection system and their alarms.

2.10 Hull Surveys of Liquefied Gas Carriers

2.10.1 Annual Surveys

In addition to the surveys as per applicable requirements of 2.5, the components, equipment and outfit as listed below are to be examined as to whether they are in unobjectionable maintenance condition.

(a) Cargo handling systems are to be examined as follows:

(i) The cargo and process piping, expansion joints, cargo hoses and machinery, such as heat exchangers, vapourizers, pumps, compressors are to be externally examined.

(ii) The availability of the required spool pieces for piping separation is to be verified.

(iii) The log books are to be examined with regard to correct functioning of the cargo containment and cargo handling systems. The running hours per day of the re-liquefaction plants or the boil-off rate and the inert gas consumption are to be considered.

(iv) It is to be ensured that the relevant instructions and information material such as cargo handling plants, cargo tank loading limit information, cooling down procedures etc. are on board.

(b) Cargo containment venting systems are to be examined as follows:

(i) Venting system for cargo tanks, inter barrier spaces (in case of Type A tanks, cargo holds) are to be visually examined. It is to be verified that the cargo tank relief valves are sealed and that the certificate containing details on opening/closing pressure of the relief valves is kept on board.

(ii) Protection screens and flame arresters, if fitted, are to be examined for corrosion and cleanliness.

(c) Instrumentation and safety systems are to be examined as follows:

(i) The monitoring and control equipment for pressure, temperature and liquid levels is to be verified as to its good working order, by one or several of the following methods:

(1) Visual external examination.

(2) Comparison of read-outs of different indicators.

(3) Comparison of read-outs with the data of the cargo actually handled.

(4) Examination of repair and maintenance records with reference to the cargo plant repair.

(ii) Emergency shut-down valves at shore connections and tanks are to be tested without flow in the pipe lines. It is to be verified that operation of the emergency shut-down system is to cause the cargo pumps and compressors to stop.

(iii) The fixed and portable gas detection equipment, including indicators and alarms, is to be tested for correct functioning.

(d) In gas-dangerous spaces and zones the electrical equipment including cables and their supports, is to be visually examined, particularly regarding explosion protection.

(e) Ventilation systems for all spaces in the cargo area, including cargo pump rooms, cargo compressor rooms, electrical motor rooms, cargo control rooms, and other spaces used for cargo handling operations are to be examined as to their satisfactory operating condition.

(f) Inert gas/dry air systems, including the means for prevention of backflow of cargo vapour to gas-safe spaces are to be checked as to their satisfactory operating condition. See also 3.3.1 of this Part.

(g) All fire fighting systems in the cargo area, including the compressor room, are to be checked visually. See also 2.5.1(j).

(h) The following items of equipment are to be inspected for their condition and correct functioning:

(i) Means for ensuring gas-tightness of wheelhouse windows and doors, windows in end bulkheads of superstructures and deck house facing the cargo area or stern loading/unloading arrangements, and closing devices of all air intakes and openings into accommodation, service and control stations.

(ii) Sealing arrangements for tanks or tank domes penetrating decks or tank covers.

(iii) Drip trays or insulation for deck protection against cargo leakage.

(iv) Arrangements for heating of hull structural elements, if any. Access to the heated cofferdams etc. is normally not required.

(v) Electric bonding of cargo piping systems.

(vi) Arrangements for the use of boil-off gas as fuel, including alarm and safety systems.

2.10.2 Intermediate Surveys

In addition to the surveys as per Annual Survey in 2.10.1 and the applicable requirements of the Intermediate Surveys in 2.6, the checks mentioned below are to be carried out. The Intermediate Survey supplements the preceding Annual Survey by testing of cargo handling installations, with pertinent automatic controls, alarm and safety systems, for their correct functioning.

(a) Cargo systems and tanks are to be examined as follows:

(i) The piping system in cargo tanks is to be examined. Bonding of tanks and pipes is to be controlled.

(ii) It is to be checked whether the ship's cargo hoses are approved and in satisfactory condition. At intervals of not more than 2.5 years, the cargo hoses are to be subjected to a pressure and conductivity test.

(iii) Weather deck: Piping systems essential for operation of the ship, e.g. cargo transfer, bunkering and ballast lines, are to be examined.

(iv) For ships between 5 and 10 years of age, an overall survey of representative ballast tanks is to be carried out.

(v) For ships over 10 years of age, an overall survey of all ballast tanks is to be carried out.

(vi) Close-up survey as required in Table I 2-24.

(b) Cargo containment venting systems are to be examined as follows:

(i) The drainage arrangements of venting systems are to be examined.

(ii) If cargo tanks are equipped with relief valves with non-metallic membranes in main or pilot valves, such membranes are to be replaced by new ones and the valves are to be adjusted, function tested and sealed. These measures need not be taken simultaneously with the Intermediate Survey, provided that the non-metallic membranes are renewed at intervals not exceeding 3 years.

(c) Instrumentation and safety systems are to be examined as follows:

(i) The alarm, control and safety systems of the cargo installation are to be visually examined and tested by varying pressures, temperatures and liquid levels, as far as practicable, and comparisons are to be drawn, using test instruments. Simulated testing may be accepted for sensors which are not accessible or for sensors located within cargo tanks or inertised cargo holds. This test is to include testing of alarm and safety functions.

(ii) The gas detection equipment, including indicators and alarms, is to be tested for correct functioning. The piping of the gas detection system is to be visually inspected for corrosion and damages. The tightness and integrity of suction lines between suction points and analyzing units are to be verified as far as possible.

(iii) On ships having arrangements for the use of boil-off gases as fuel, safety, control, alarm and shut-down systems are to be checked. The extent of the checks is to be determined from case to case.

(d) Electrical installations are to be examined as follows:

Electrical equipment in gas-dangerous spaces and zones is to be examined in respect of the following:

(i) Protective earthing (spot check).

(ii) Integrity of certified safe-type equipment.

(iii) Damage to outer sheath of cables.

(iv) Function testing of pressurized equipment, and of associated alarms.

(v) Testing of systems for de-energizing noncertified safe electrical equipment located in spaces protected by air-locks, such as electric motor rooms, cargo control rooms, etc.

(vi) Checking of insulation resistance of circuits. Relevant measurements are only to be made when the ship is in gas free or inertised condition. If proper test reports are available on board, readings made by the crew may be accepted.

(vii) When the ship is in gas free condition, it is to be verified that the cargo tanks are electrically bonded to the hull.

2.10.3 Special Survey

Where applicable, in addition to the surveys as per requirements of the Intermediate Survey in 2.10.2 and applicable requirements of the Special Survey in 2.7, the examinations and tests as mentioned below are to be carried out:

(a) The cargo containment systems is to be examined as follows:

(i) All cargo tanks are to be examined internally.

(ii) As far as practicable, the outer surface of un-insulated cargo tanks or the outer surface of cargo tanks insulations, including vapour or protective cover if any, is to be examined, as are areas in way of supports, keys and anti-flotation chocks. Partial removal of insulation may be required in order to verify the condition of the tank or the insulation itself, if found necessary by the Surveyor. Where, e.g. in the case of membrane type cargo tanks, the insulation arrangement is such that it cannot be examined, the surrounding structures of wing tanks, double bottom tanks and cofferdams are to be examined for cold spots when cargo tanks are in cold condition. This examination may be dispensed with if the log book, together monitoring instruments gives sufficient evidence of the integrity of the insulation system.

(iii) Thickness measurements of cargo tanks may be required if deemed necessary by the Surveyor.

(iv) Non-destructive examination of main structural members, tank shells and highly stressed parts, including welded connections is to supplement cargo tank inspections as far as deemed necessary by the Surveyor. The following items are inter alia considered as highly stressed parts:

(1) Cargo tank supports and longitudinal and transverse securing devices.

(2) Y-connections between tank shells and longitudinal bulkheads of slop tanks.

(3) Web frames or stiffening rings.

(4) Swash bulkheads and their fixations.

(5) Dome and sump connection to tank shells.

(6) Foundations for pumps, towers, ladders, etc.

(7) Pipe connections.

(v) For independent Type B tanks, the extent of non-destructive examination is defined in a plan specially prepared for the particular cargo tank design.

(vi) The tightness of all cargo tanks is to be verified by an appropriate procedure provided that the effectiveness of the ship gas detection equipment has been confirmed, it is to be acceptable to utilize this equipment for the tightness test of independent tanks below deck during the first process of filling of the cargo tanks subsequent to the Special Survey.

(vii) Where the findings of checks according to 2.10.3(a)(i) to (vi) above or an examination of the log book raise doubts as to the structural integrity of a cargo tank, a hydrostatic or hydro-pneumatic test is to be carried out. For integral tanks and for independent Type A and B tanks, the test pressure at the top of tank is to correspond to the MARVS (maximum allowable relief valve setting) of the tank. For independent Type C tanks, the test pressure at the top of the tank is not to less than 1.25 times the MARVS.

(viii) Extended tests

On the occasion of Special Surveys No. 3, 4, 5, etc., all independent type C tanks are to be either

(1) Hydrostatically or hydro-pneumatically tested to a pressure at the upper edge of the tanks of 1.25 times MARVS and thereafter, non-destructively, in accordance with (iv)/(v) of this subparagraph, or

(2) Subjected to a thorough, systematically planned nondestructive examination procedure. These tests are to be carried out in accordance with a plan specially prepared for the particular tank design. If a special plan dose not exist, the following applies with regard to nondestructive testing:
Testing is to be concentrated on the detection of surface cracks in welded connections in highly stressed areas, as listed in 2.10.3(a)(iv) above. At least 10% of the length of the welded connections in each of the above mentioned areas are to be tested. This testing is to be carried out internally and externally, as far as practicable. Insulation is to be removed as necessary for the required nondestructive examination.

(b) Tank supporting structures and insulation are to be examined as follows:

(i) As far as practicable, all hold spaces and hull insulation (if provided), secondary barriers and tank supporting structures are to be visually examined. The secondary barrier of all tanks is to be checked for its effectiveness by means of a pressure/vacuum test, a visual examination or some other acceptable methods.

(ii) For membrane and semi-membrane tank systems, the inspection and testing as per 2.10.3(b)(i) above are to be carried out in accordance with a plan and an approved method specially prepared for the actual tank system.

(c) Pressure and vacuum relief valves are to be examined as follows:

(i) The pressure relief valves for cargo tanks are to be opened up for examination, adjusted, function tested and sealed. The requirements of 2.10.2(b)(ii) regarding replacement of nonmetallic membrane apply. The following tolerances apply regarding the set pressures of cargo tank pressure relief valves:

Set pressure P	Tolerance
P ≤ 0.15 MPa	± 10 %
0.15 MPa< P ≤ 0.3 MPa	± 6 %
0.3 MPa< P	± 3 %

(ii) Pressure/vacuum relief valves, rupture discs and other pressure relief devices for inter-barrier spaces and hold spaces are to be examined, opened and tested if necessary, depending on their design.

(d) It is to be verified that cargo tanks are to be electrically bonded to the hull.

(e) Piping systems are to be examined as follows:

(i) Cargo, liquid nitrogen and process piping systems, including their valves and actuators, compensators etc., are to be opened up for examination as deemed necessary by the Surveyor. Insulation is to be removed as deemed necessary to ascertain the external condition of pipes. At the Surveyor's discretion welded seams at branches and bends are to be subjected to non-destructive random crack tests. If the visual examination raises doubts as to the integrity of pipelines, they are to be pressure tested to 1.25 times MARVS. After reassembly the complete piping system is to be tested for leaks.

(ii) The pressure relief valves in piping systems are to be function tested. A random selection of valves is to be opened up for examination and adjusted.

(iii) Cargo pumps, booster pumps and gas compressors are to be inspected and tested.

(f) The re-liquefaction installation is to be examined as follows:

(i) The parts of compressors subject to wear, such as cylinders, pistons, connecting rods, glands, bearings, auxiliary components, such as shafts, rotors and diffusers of centrifugal pumps, etc., are to be examined.

(ii) The drives of compressors, including those components which are required for operation of the drives, are to be inspected.

(iii) All the covers of heat exchangers are to be dismounted for inspection of pipe plates, if necessary, pressure and tightness tests are to be connected. If only a few pipes have been exchanged, a tightness test may be sufficient.

(iv) The safety equipment (pressure relief valves, rupture discs) is to be checked.

(g) At Special Surveys No. 2 and subsequent, all other pressure vessels in the reliquefaction/refrigeration system, gas fuel burning system and other handling systems are to be pneumatically tested to a pressure equal to the designed working pressure.

(h) The equipment connected with fuel gas evaporated from the LNG cargo is to be examined as follows:

(i) The gas conditioning plant is to be inspected externally.

(ii) The pipe or duct enclosing the fuel gas line is to be inspected for leaks. The ventilation system of that pipe or duct as well as the inertising equipment of a double wall piping system is to be checked for their operability. Heat exchangers are to be visually examined internally.

(iii) Safety devices: See 2.10.2(c).

(i) In addition to the visual examinations and tests as per 2.10.2(d) the protection devices of electric motors are to be tested.

(j) Miscellaneous items are to be examined as follows:

(i) Drainage systems for removal of water or cargo inter-barrier spaces and hold spaces are to be examined and tested where necessary.

(ii) All gas tight bulkheads are to be inspected. The effectiveness of gas tight shaft sealings is to be verified.

(iii) It is to be checked whether the spare parts stipulated in the GC code or IGC code are kept on board.

(iv) Any installations for heating of hull structures are to be examined for correct functioning.

(k) Close-up survey as required in Table I 2-25.

(l) Ballast tanks, including double bottom tanks, pump rooms, compressor rooms, pipe tunnels, cofferdams and void spaces bounding cargo tanks, decks and outer hull are to be examined. All piping systems within the above spaces are to be examined and operationally tested to working pressure to attending Surveyor's satisfaction.

(m) Thickness measurement as required in Table I 2-26.

(n) Tank testing for ballast tanks and fuel oil tanks

(i) All boundaries of water ballast tanks and deep tanks used for water ballast within the cargo area are to be pressure tested. For fuel oil tanks, the representative tanks are to be pressure tested.

(ii) The Surveyor may extend the tank testing as deemed necessary.

(iii) Tank testing of fuel oil tanks is to be carried out with a head of liquid to the highest point that liquid will rise under service conditions. Tank testing of fuel oil tanks may be specially considered based on a satisfactory external examination of the tank boundaries, and a confirmation from the Master stating that the pressure testing has been carried out according to the requirements with satisfactory results.

(o) Cargo tank testing

Cargo tank testing carried out by the vessel's crew under the direction of the Master may be accepted by the Surveyor provided the following conditions are complied with:

(i) A tank testing procedure has been submitted by the owner and reviewed by this Society prior to the testing being carried out;

(ii) There is no record of leakage, distortion or substantial corrosion that would affect the structural integrity of the tank;

(iii) The tank testing has been satisfactorily carried out within Special Survey window not more than 3 months prior to the date of the survey on which the overall or close up survey is completed;

(iv) The satisfactory results of the testing is recorded in the vessel's logbook;

(v) The internal and external condition of the tanks and associated structure are found satisfactory by the surveyor at the time of the overall and close up survey.

2.11 Hull Surveys of Oil Tankers

Procedures for class related services, see 2.1.4 of this Chapter. Provision for surveys, see 2.1.5 of this Chapter. Preparation for enhanced survey for ESP ships, see 2.1.6 of this Chapter.

2.11.1 Annual Surveys

In addition to the requiements of the Annual Survey in 2.5, those items herein are to be carried out.

The survey is to consist of an examination for the purpose of ensuring, as far as practicable, that the hull and piping are maintained in a satisfactory condition and should take into account the service history, condition and extent of the corrosion prevention system of ballast tanks and areas identified in the survey report file.

(a) Examination of the Hull

(i) Examination of the hull plating and its closing appliances as far as can be seen.

(ii) Examination of watertight penetrations as far as practicable

(b) Examination of weather decks

(i) Examination of cargo tank openings including gaskets, covers, coamings and flame screens.

(ii) Examination of cargo tanks pressure/vacuum valves and flame screens.

(iii) Examination of flame screens on vents to all bunker tanks.

(iv) Examination of cargo, crude oil washing, bunker and vent piping systems, including vent masts and headers.

(c) Examination of Cargo pump rooms and pipe tunnels if fitted.

(i) Examination of all pumproom bulkheads for signs of oil leakage or fractures and, in particular, the sealing arrangements of all penetrations of pumproom bulkheads.

(ii) Examination of the condition of all piping systems.

(d) Examination of Ballast Tanks

Examination of Ballast Tanks where required as a consequence of the results of the Special Survey (see 2.11.3(c)) and Intermediate Survey (see 2.11.2(b)(i) and 2.11.2(b)(ii)) is to be carried out. When considered necessary by the Surveyor, or when extensive corrosion exists, thickness measurements are to be carried out and if the results of these thickness measurements indicate that Substantial Corrosion is found, the extent of thickness measurements is to be increased in accordance with Table I 2-4B. These extended thickness measurements are to be carried out before the survey is credited as completed. Suspect Areas identified at previous surveys are to be examined. Areas of substantial corrosion identified at previous surveys are to have thickness measurements taken.

2.11.2 Intermediate Survey

Those items which are additional to the requirements of the Annual Surveys in 2.11.1 and the applicable requirements of the Intermediate Survey in 2.6 may be surveyed either at or between the 2nd and 3rd Annual Survey;

Concurrent crediting to both Intermediate Survey (IS) and Special Survey (SS) for surveys and thickness measurements of spaces are not acceptable.

(a) General

(i) The survey extent is dependent on the age of the vessel as specified in 2.11.2(b) to 2.11.2(d).

(ii) For weather decks, an examination as far as applicable of cargo, crude oil washing, bunker, ballast, steam and vent piping systems as well as vent masts and headers is to be carried out. If upon

examination there is any doubt as to the condition of the piping, the piping may be required to be pressure tested, thickness measured or both.

(b) Oil Tankers 5 – 10 Years of Age, the following is to apply:

(i) All Ballast Tanks are to be examined. When considered necessary by the Surveyor, thickness measurement and testing are to be carried out to ensure that the structural integrity remains effective.

(ii) A Ballast Tank is to be examined at subsequent annual intervals where:

(1) a hard protective coating has not been applied from the time of construction, or

(2) a soft or semi-hard coating has been applied, or

(3) substantial corrosion is found within the tank, or

(4) the hard protective coating is found to be in less than GOOD condition and the hard protective coating is not repaired to the satisfaction of the Surveyor.

(iii) In addition to the requirements above, suspect areas identified at previous surveys are to be examined.

(c) Oil Tankers 10 - 15 years of Age, the following is to apply:

(i) The requirements of the Intermediate Survey are to be to the same extent as the previous Special Survey as required in 2.11.3 and 2.1.6(a). However, pressure testing of cargo and ballast tanks and the requirements for longitudinal strength evaluation of Hull Girder as required in 2.1.6(f) are not required unless deemed necessary by the attending Surveyor.

(ii) In application of 2.11.2(c)(i) above, the Intermediate Survey may be commenced at the second Annual Survey and be progressed during the succeeding year with a view to completion at the third Annual Survey in lieu of the application of 1.6.4(c)(ii) of the Part.

(iii) In application of 2.11.2(c)(i) above, an In-water survey may be considered in lieu of the requirements of 2.11.3(b).

(d) Oil Tankers over 15 years of Age, the following is to apply:

(i) The requirements of the Intermediate Survey are to be to the same extent as the previous Special Survey as required in 2.11.3 and 2.1.6(a). However, pressure testing of cargo and ballast tanks and the requirements for longitudinal strength evaluation of Hull Girder as required in 2.1.6(f) are not required unless deemed necessary by the attending Surveyor.

(ii) In application of 2.11.2(d)(i) above, the Intermediate Survey may be commenced at the second Annual Survey and be progressed during the succeeding year with a view to completion at the third Annual Survey in lieu of the application of 1.6.4(c)(ii) of the Part.

(iii) In application of 2.11.2(d)(i) above, a survey in dry dock is to be part of the Intermediate Survey. The overall and close-up surveys and thickness measurements, as applicable, of the lower portions of the cargo tanks and water ballast tanks(1) are to be carried out in accordance with the applicable requirements for Intermediate Surveys, if not already performed.

Note:

(1) Lower portions of the cargo and ballast tanks are considered to be the parts below light ballast water line.

2.11.3 Special Survey

Concurrent crediting to both Intermediate Survey (IS) and Special Survey (SS) for surveys and thickness measurements of spaces are not acceptable.

(a) General

(i) The Special Survey is to include, in addition to the requirements of the Annual Survey in 2.11.1 and the applicable requirements of the Special Survey in 2.7, examination, tests and checks of sufficient extent to ensure that the hull and related piping, as required in 2.11.3(a)(iii), is in a satisfactory condition and is fit for its intended purpose for the new period of class of 5 years to be assigned, subject to proper maintenance and operation and to periodical surveys being carried out at the due dates.

(ii) All cargo tanks, Ballast Tanks, including double bottom tanks, pumprooms, pipe tunnels, cofferdams and void spaces bounding cargo tanks, decks and outer hull are to be examined, and this examination is to be supplemented by thickness measurement and testing required in 2.11.3(e) and 2.11.3(f), to ensure that the structural integrity remains effective. The aim of the examination is to discover Substantial Corrosion, significant deformation, fractures, damages or other structural deterioration, that may be present.

(iii) Cargo piping on deck, including Crude Oil Washing (COW) piping, Cargo and Ballast piping within the above tanks and spaces are to be examined and operationally tested to working pressure to attending Surveyor's satisfaction to ensure that tightness and condition remain satisfactory. Special attention is to be given to any ballast piping in cargo tanks and cargo piping in ballast tanks and void spaces, and Surveyors are to be advised on all occasions when this piping, including valves and fittings are open during repair periods and can be examined internally.

(b) Bottom Survey in dry dock

(i) A Bottom Survey in dry dock is to be a part of the Special Survey. The overall and close-up surveys and thickness measurements, as applicable, of the lower portions of the cargo tanks and ballast tanks(1) are to be carried out in accordance with the applicable requirements for Special Surveys, if not already performed.

Note:

(1) Lower portions of the cargo and ballast tanks are considered to be the parts below light ballast water line.

(c) Tank Protection

(i) Where provided, the condition of the corrosion prevention system of cargo tanks is to be examined. A Ballast Tank is to be examined at subsequent annual intervals where:

(1) a hard protective coating has not been applied from the time of construction, or

(2) a soft or semi-hard coating has been applied, or

(3) substantial corrosion is found within the tank, or

(4) the hard protective coating is found to be in less than GOOD condition and the hard protective coating is not repaired to the satisfaction of the Surveyor. Thickness measurements are to be carried out as deemed necessary by the Surveyor.

(d) Extent of overall and close-up survey

(i) An overall survey of all tanks and spaces is to be carried out at each Special Survey.

(ii) The minimum requirements for close-up surveys at Special Survey are given in Table I 2-5A.

(iii) The Surveyor may extend the close-up survey as deemed necessary taking into account the maintenance of the tanks under survey, the condition of the corrosion prevention system and also in the following cases:

(1) In particular, tanks having structural arrangements or details which have suffered defects in similar tanks or on similar ships according to available information.

(2) In tanks which have structures approved with reduced scantlings due to an approved corrosion control system.

(iv) For areas in tanks where hard protective coatings are found to be in a GOOD condition as defined in 2.1.2(l), the extent of close-up surveys according to Table I 2-5A may be specially considered.

(e) Extent of Thickness Measurement

(i) The minimum requirements for thickness measurements at Special Survey are given in Table I 2-3B.

(ii) Provisions for extended measurements for areas with Substantial Corrosion are given in Table I 2-4B, and as may be additionally specified in the Survey Programme as required by 2.1.6(a). These extended thickness measurements are to be carried out before the survey is credited as completed. Suspect Areas identified at previous surveys are to be examined. Areas of substantial corrosion identified at previous surveys are to have thickness measurements taken.

(iii) The Surveyor may further extend the thickness measurements as deemed necessary.

(iv) For areas in tanks where hard protective coating are found to be in a GOOD condition as defined in 2.1.2(l), the extent of thickness measurements according to Table I 2-3B may be specially considered.

(v) Transverse sections are to be chosen where the largest reductions are suspected to occur or are revealed from deck plating measurements.

(vi) In cases where 2 or 3 sections are to be measured, at least one is to include a Ballast Tank within 0.5L amidships.

In case of oil tankers of 130 m in length and upwards (as defined in the International Convention on Load Lines in force) and more than 10 years of age, for the evaluation of the ship's longitudinal strength as required in 2.1.6(f), the sampling method of thickness measurements is given in IACS UR Z10.1-Annex III Appendix 3.

(f) Extent of Tank Testing

(i) The minimum requirements for ballast tank testing at Special Survey are given in 2.11.3(f)(iii) and Table I 2-2.

The minimum requirements for cargo tank testing at Special Survey are given in 2.11.3(f)(iv) and Table I 2-2.

Cargo tank testing carried out by the vessel's crew under the direction of the Master may be accepted by the Surveyor provided the following conditions are complied with:

(1) a tank testing procedure, specifying fill heights, tanks being filled and bulkheads being tested, has been submitted by the owner and reviewed by the Society prior to the testing being carried out;

(2) there is no record of leakage, distortion or substantial corrosion that would affect the structural integrity of the tank;

(3) the tank testing has been satisfactorily carried out within Special Survey window not more than 3 months prior to the date of the survey on which the overall or close up survey is completed;

(4) the satisfactory results of the testing is recorded in the vessel's logbook;

(5) the internal and external condition of the tanks and associated structure are found satisfactory by the Surveyor at the time of the overall and close up survey.

(ii) The Surveyor may extend the tank testing as deemed necessary.

(iii) Boundaries of ballast tanks are to be tested with a head of liquid to the top of air pipes.

(iv) Boundaries of cargo tanks are to be tested to the highest point that liquid will rise under service conditions.

2.12 Hull Surveys of Bulk Carriers

Procedures for class related services, see 2.1.4 of this Chapter. Provision for surveys, see 2.1.5 of this Chapter. Preparation for enhanced survey for ESP ships, see 2.1.6 of this Chapter.

2.12.1 Annual Survey

In addition to the applicable requirements of the Annual Survey in 2.5, those items herein are to be carried out.

The survey is to consist of an examination for the purpose of ensuring, as far as practicable, that the hull, weather decks, hatch covers, coamings and piping are maintained in a satisfactory condition and should take into account the service history, condition and extent of the corrosion prevention system of ballast tanks and areas identified in the survey report file.

(a) Examination of the Hull

(i) Examination of the hull plating and its closing appliances as far as can be seen.

(ii) Examination of watertight penetrations as far as practicable.

(b) Examination of weather decks, Hatch covers and coamings

(i) Confirmation is to be obtained that no unapproved changes have been made to the hatch covers, hatch coamings and their securing and sealing devices since the last survey.

(ii) A thorough survey of cargo hatch covers and coamings is only possible by examination in the open as well as closed positions and should include verification of proper opening and closing operation. As a result, the hatch cover sets within the forward 25% of the ship's length and at least one additional set, such that all sets on the ship are assessed at least once in every 5-year period, are to be surveyed open, closed and in operation to the full extent on each direction at each Annual Survey, including:

(1) stowage and securing in open condition;

(2) proper fit and efficiency of sealing in closed condition; and

(3) operational testing of hydraulic and power components, wires, chains, and link drives.

The closing of the covers is to include the fastening of all peripheral, and cross joint cleats or other securing devices. Particular attention is to be paid to the condition of the hatch covers in the forward 25% of the ship's length, where sea loads are normally greatest.

(iii) If there are indications of difficulty in operating and securing hatch covers, additional sets above those required by 2.12.1(b)(ii), at the discretion of the Surveyor, are to be tested in operation.

(iv) Where the cargo hatch securing system does not function properly, repairs are to be carried out under the supervision of the Classification Society. Where hatch covers or coamings undergo substantial repairs, the strength of securing devices should be upgraded to comply with S21.5 of IACS UR S21.

(v) For each cargo hatch cover set, at each Annual Survey, the following items are to be surveyed:

(1) Cover panels, including side plates, and stiffener attachments that may be accessible in the open position by close-up survey (for corrosion, cracks, deformation);

(2) sealing arrangements of perimeter and cross joints (gaskets for condition and permanent deformation, flexible seals on combination carriers, gasket lips, compression bars, drainage channels and non return valves);

(3) clamping devices, retaining bars, cleating (for wastage, adjustment, and condition of rubber components);

(4) closed cover locating devices (for distortion and attachment);

(5) chain or rope pulleys;

(6) guides;

(7) guide rails and track wheels;

(8) stoppers;

(9) wires, chains, tensioners, and gypsies;

(10) hydraulic system, electrical safety devices and interlocks; and

(11) end and interpanel hinges, pins and stools where fitted.

(vi) At each hatchway, at each Annual Survey, the coamings, with plating, stiffeners and brackets are to be checked for corrosion, cracks and deformation, especially of the coaming tops, including close-up survey.

(vii) Where considered necessary, the effectiveness of sealing arrangements may be proved by hose or chalk testing supplemented by dimensional measurements of seal compressing components.

(viii) Where portable covers, wooden or steel pontoons are fitted, checking the satisfactory condition, where applicable, of:

(1) wooden covers and portable beams, carriers or sockets for the portable beam, and their securing devices;

(2) steel pontoons, including close-up survey of hatch cover plating.

(3) tarpaulins;

(4) cleats, battens and wedges;

(5) hatch securing bars and their securing devices;

(6) loading pads/bars and the side plate edge;

(7) guide plates and chocks;

(8) compression bars, drainage channels and drain pipes (if any).

(ix) Examination of flame screens on vents to all bunker tanks.

(x) Examination of bunker and vent piping systems, including ventilators.

(c) Examination of Cargo Holds for Bulk Carriers 10-15 years of age, the following is to apply:

(i) Overall survey of all cargo holds.

(ii) Close-up survey of sufficient extent, minimum 25% of frames, to establish the condition of the lower region of the shell frames including approx. lower one third length of side frame at side shell and side frame end attachment and the adjacent shell plating in the forward cargo hold. Where this level of survey reveals the need for remedial measures, the survey is to be extended to include a close-up survey of all of the shell frames and adjacent shell plating of that cargo hold as well as a close-up survey of sufficient extent of all remaining cargo holds.

(iii) When considered necessary by the Surveyor, or where extensive corrosion exists, thickness measurement is to be carried out. If the results of these thickness measurements indicate that Substantial Corrosion is found, the extent of thickness measurements is to be increased in accordance with Table I 2-4C. These thickness measurements are to be carried out before the Annual Survey is credited as completed. Suspect Areas identified at previous surveys are to be examined. Areas of substantial corrosion identified at previous surveys are to have thickness measurements taken.

For ships built under the IACS Common Structural Rules, the annual thickness gauging may be omitted where a protective coating has been applied in accordance with the coating manufacturer's requirements and is maintained in good condition.

(iv) Where the protective coating in cargo holds, as defined by 23.1.7 of Part II of the Rules is found to be in GOOD condition, the extent of close-up surveys and thickness measurements may be specially considered.

(v) All piping and penetrations in cargo holds, including overboard piping, are to be examined.

(d) Examination of Cargo Holds for Bulk Carriers over 15 years of age, the following is to apply:

(i) Overall survey of all cargo holds.

(ii) Close-up survey of sufficient extent, minimum 25% of frames, to establish the condition of the lower region of the shell frames including approx. lower one third length of side frame at side shell and side frame end attachment and the adjacent shell plating in the forward cargo hold and one other selected cargo hold. Where this level of survey reveals the need for remedial measures, the survey is to be extended to include a close-up survey of all of the shell frames and adjacent shell plating of that cargo hold as well as a close-up survey of sufficient extent of all remaining cargo holds.

(iii) When considered necessary by the Surveyor, or where extensive corrosion exists, thickness measurement is to be carried out. If the results of these thickness measurements indicate that Substantial Corrosion is found, the extent of thickness measurements is to be increased in accordance with Table I 2-4C. These extended thickness measurements are to be carried out before the Annual Survey is credited as completed. Suspect Areas identified at previous surveys are to be examined. Areas of substantial corrosion identified at previous surveys are to have thickness measurements taken.

For ships built under the IACS Common Structural Rules, the annual thickness gauging may be omitted where a protective coating has been applied in accordance with the coating manufacturer's requirements and is maintained in good condition.

(iv) Where a hard protective coating is fitted in cargo holds, as defined by 23.1.7 of Part II of the Rules and is found in GOOD condition, the extent of close-up surveys and thickness measurements may be specially considered.

(v) All piping and penetrations in cargo holds, including overboard piping, are to be examined.

(e) Examination of Ballast Tanks

(i) Examination of Ballast Tanks when required as a consequence of the results of the Special Survey and Intermediate Survey is to be carried out. When considered necessary by the Surveyor, or where

extensive corrosion exists, thickness measurements are to be carried out. If the results of these thickness measurements indicate that Substantial Corrosion is found, the extent of thickness measurements is to be increased in accordance with Table I 2-4C. These extended thickness measurements are to be carried out before the survey is credited as completed. Suspect Areas identified at previous surveys are to be examined. Areas of substantial corrosion identified at previous survey are to have thickness measurements taken.

For ships built under the IACS Common Structural Rules, the annual thickness gauging may be omitted where a protective coating has been applied in accordance with the coating manufacturer's requirements and is maintained in good condition.

(f) Additional Annual Survey requirements for the foremost cargo hold of ships subject to SOLAS XII/9.1

(i) Ships subject to SOLAS XII/9.1 are those meeting all the following conditions:

(1) Bulk Carriers of 150 m in length and upwards of single side skin construction,

(2) carrying solid bulk cargoes having a density of 1780 kg/m^3 and above,

(3) contracted for construction before 1 July 1999, and

(4) constructed with an insufficient number of transverse watertight bulkheads to enable them to withstand flooding of the foremost cargo hold in all loading conditions and remain afloat in a satisfactory condition of equilibrium as specified in SOLAS XII/4.3.

(ii) In accordance with SOLAS XII/9.1, for the foremost cargo hold of such ships, the additional survey requirements listed below shall apply:

(1) For bulk carriers of 5-15 years of age:

a) An overall survey of the foremost cargo hold, including close-up survey of sufficient extent, minimum 25% of frames, is to be carried out to establish the condition of:

i) Shell frames including their upper and lower end attachments, adjacent shell plating, and transverse bulkheads.

ii) Suspect areas identified at previous surveys (see 2.1.2(u)).

b) Where considered necessary by the Surveyor as a result of the overall and close-up survey as described in a) above, the survey is to be extended to include a close-up survey of all of the shell frames and adjacent shell plating of the cargo hold.

(2) For bulk carriers exceeding 15 years of age:

a) An overall survey of the foremost cargo hold, including close-up survey is to be carried out to establish the condition of:

i) All shell frames including their upper and lower end attachments, adjacent shell plating, and transverse bulkheads.

ii) Suspect areas identified at previous surveys (see 2.1.2(u)).

(3) Extent of Thickness Measurement

a) Thickness measurement is to be carried out to an extent sufficient to determine both general and local corrosion levels at areas subject to close-up survey, as described in 2.12.1(f)(ii)(1)a) and 2.12.1(f)(ii)(2)a) above.

The minimum requirement for thickness measurements are suspect areas identified at previous surveys (see 2.1.2(u)).
Where Substantial Corrosion as defined in 2.1.2(j) is found, the extent of thickness measurements should be increased with the requirements of Table I 2-4C.

b) The thickness measurement may be dispensed with provided the Surveyor is satisfied by the close-up survey, that there is no structural diminution and the Protective Coating where fitted remains effective.

(4) Special Consideration

a) Where the protective coating in the foremost cargo hold, as defined by 23.1.7 of Part II is found to be in GOOD condition, the extent of close-up surveys and thickness measurements may be specially considered.

Explanatory note:
For existing bulk carriers, where owners may elect to coat or recoat cargo holds as noted above, consideration may be given to the extent of the close-up and thickness measurement surveys. Prior to the coating of cargo holds of existing ships, scantlings should be ascertained in the presence of the Surveyor.

(g) Additional Annual Survey requirements after determining compliance with SOLAS XII/12 and XII/13

(i) For ships complying with the requirements of SOLAS XII/12 for hold, ballast and dry space water level detectors, the Annual Survey is to include an examination and a test, at random, of the water ingress detection systems and of their alarms.

(ii) For ships complying with the requirements of SOLAS XII/13 for the availability of pumping systems, the Annual Survey is to include an examination and a test, of the means for draining and pumping ballast tanks forward of the collision bulkhead and bilges of dry spaces any part of which extends forward of the foremost cargo hold, and of their controls.

2.12.2 Intermediate Survey

Those items which are additional to the requirements of the Annual Survey in 2.12.1 and the applicable requirements of the Intermediate Survey in 2.6 may be surveyed either at or between the 2nd and 3rd Annual Survey.

Concurrent crediting to both Intermediate Survey (IS) and Special Survey (SS) for surveys and thickness measurements of spaces are not acceptable.

(a) Examination of Bulk Carriers 5 -10 years of age. The following is to apply:

(i) Ballast Tanks

(1) For tanks used for water ballast, an overall survey of representative spaces selected by the Surveyor is to be carried out. The selection is to include fore and aft peak tanks and a number of other tanks, taking into account the total number and type of ballast tanks. If such overrall survey reveals no visible structural defects, the examination may be limited to verification that the corrosion prevention system remains efficient.

(2) Where POOR coating condition, corrosion or other defects are found in water ballast tanks or where a hard protective coating was not applied from the time of construction, the examination is to be extended to other ballast tanks of the same type.

(3) In ballast tanks other than double bottom tanks, where a hard Protective Coating is found in POOR condition, and it is not renewed, or where soft or semi-hard coating has been applied, or where a hard protective coating was not applied from the time of construction, the tanks in question are to be examined and thickness measurements carried out as considered necessary at annual intervals. When such breakdown of hard protective coating is found in ballast double bottom tanks, or where a soft or semi-hard coating has been applied, or where a hard protective coating has not been applied, the tanks in question may be examined at annual intervals. When considered necessary by the Surveyor, or where extensive corrosion exists, thickness measurements are to be carried out.

(4) In addition to the requirements above, suspect areas identified at previous surveys are to be overall and close-up surveyed.

(ii) Cargo Holds

(1) An overall survey of all cargo holds, including close-up survey of sufficient extent, minimum 25 % of frames, is to be carried out to establish the condition of:

a) Shell frames including their upper and lower end attachments, adjacent shell plating, and transverse bulkheads in the forward cargo hold and one other selected cargo hold;

b) Areas found suspect at previous surveys.

(2) Where considered necessary by the Surveyor as a result of the overall and close-up survey as described in 2.12.2(a)(ii)(1) above, the survey is to be extended to include a close-up survey of all of the shell frames and adjacent shell plating of that cargo hold as well as a close-up survey of sufficient extent of all remaining cargo holds.

(iii) Extent of Thickness Measurements

(1) Thickness measurements are to be carried out to an extent sufficient to determine both general and local corrosion levels at areas subject to close-up survey as described in 2.12.2(a)(ii)(1) above. The minimum requirement for thickness measurements at the Intermediate Survey are areas found to be Suspect Areas at previous surveys.

(2) The extent of thickness measurement may be specially considered provided the Surveyor is satisfied by the close-up survey, that there is no structural diminution and the hard protective coatings are found to be in a GOOD condition.

(3) Where Substantial Corrosion is found, the extent of thickness measurements is to increased in accordance with the requirements of Table I 2-4C. These extended thickness measurements are to be carried out before the survey is credited as completed. Suspect Areas identified at previous surveys are to be examined. Areas of substantial corrosion identified at previous surveys are to have thickness measurements taken.

(4) For ships built under IACS Common Structural Rules, the identified substantial corrosion areas may be:

a) protected by coating applied in accordance with the coating manufacturer's requirements and examined at annual intervals to confirm the coating in way is still in good condition, or alternatively

b) required to be measured at annual intervals.

(5) Where the hard protective coating in cargo holds, as defined by 23.1.7 of Part II is found to be in GOOD condition, the extent of close-up surveys and thickness measurements may be specially considered.

Explanatory note:
For existing bulk carriers, where owners may elect to coat or recoat cargo holds as noted above, consideration may be given to the extent of the close-up and thickness measurement surveys. Prior to the coating of cargo holds of existing ships, scantlings should be ascertained in the presence of the Surveyor.

(b) Examination of Bulk Carriers 10-15 years of age. The following is to apply:

(i) The requirements of the Intermediate Survey are to be to the same extent to the previous Special Survey as required in 2.12.3 and 2.1.6(a). However, internal examination of fuel tanks and pressure testing of all tanks are not required unless deemed necessary by the attending Surveyor.

(ii) In application of 2.12.2(b)(i) above, the Intermediate Survey may be commenced at the second Annual Survey and be progressed during the succeeding year with a view to completion at the third Annual Survey in lieu of the application of 1.6.4(c)(ii) of this Part.

(iii) In application of 2.12.2(b)(i) above, an In-water survey may be considered in lieu of the requirements of 2.12.3(b).

(c) Bulk Carriers over 15 years of age. The following is to apply:

(i) The requirements of the Intermediate Survey are to be to the same extent to the previous Special Survey as required in 2.12.3 and 2.1.6(a). However, internal examination of fuel tanks and pressure testing of all tanks are not required unless deemed necessary by the attending Surveyor.

(ii) In application of 2.12.2(c)(i) above, the Intermediate Survey may be commenced at the second Annual Survey and be progressed during the succeeding year with a view to completion at the third Annual Survey in lieu of the application of 1.6.4(c)(ii) of the Part.

(iii) In application of 2.12.2(c)(i) above, a survey in dry dock is to be part of the Intermediate Survey. The overall and close-up surveys and thickness measurements, as applicable, of the lower portions of the cargo holds and water ballast tanks(1) are to be carried out in accordance with the applicable requirements for Intermediate Surveys, if not already performed.

Note:

(1) Lower portions of the cargo holds and ballast tanks are considered to be the parts below light ballast water line.

2.12.3 Special Survey

Concurrent crediting to both Intermediate Survey (IS) and Special Survey (SS) for surveys and thickness measurements of spaces are not acceptable.

(a) General

(i) The Special Survey is to include, in addition to the requirements of the Annual Survey in 2.12.1 and the applicable requirements of the Special Survey in 2.7, examination, tests, and checks of sufficient extent to ensure that the hull and related piping as required in 2.12.3(a)(iii) below, is in a satisfactory condition and is fit for its intended purpose for the new period of class of 5 years to be assigned subject to proper maintenance and operation and to periodical surveys being carried out at the due dates.

(ii) All cargo holds, ballast tanks, including double bottom tanks, pipe tunnels, cofferdams and void spaces bounding cargo holds, decks and outer hull are to be examined, and this examination is to be supplemented by thickness measurement and testing as required in 2.12.3(f) and 2.12.3(g), to ensure that the structural integrity remains effective. The aim of the examination is to discover Substantial Corrosion, significant deformation, fractures, damages or other structural deterioration, that may be present.

(iii) All piping systems within the above Spaces are to be examined and operationally tested to working pressure to attending Surveyor's satisfaction to ensure that tightness and condition remain satisfactory.

(iv) The survey extent of ballast tanks converted to void spaces is to be specially considered in relation to the requirements for ballast tanks.

(b) Bottom Survey in dry dock

(i) A Bottom Survey in dry dock is to be a part of the Special Survey. The overall and close-up surveys and thickness measurements, as applicable, of the lower portions of the cargo holds and ballast tanks(1) are to be carried out in accordance with the applicable requirements for Special Surveys, if not already performed.

Note:

(1) Lower portions of the cargo holds and ballast tanks are considered to be the parts below light ballast water line.

(c) Tank Protection

(i) Where provided, the condition of the corrosion prevention system of ballast tanks is to be examined. For ballast tanks, excluding double bottom tanks, where a hard protective coating is found in POOR condition and it is not renewed where soft or semi-hard coating has been applied, or where a hard protective coating has not been applied from the time of construction, the tanks in question are to be examined at annual intervals. Thickness measurements are to be carried out as deemed necessary by the Surveyor.

When such breakdown of hard protective coating is found in water ballast double bottom tanks and it is not renewed, where a soft or semi-hard coating has been applied, or where a hard protective coating has not been applied from the time of construction, the tanks in question may be examined at annual intervals. When considered necessary by the Surveyor, or where extensive corrosion exists, thickness measurements are to be carried out.

(ii) Where a hard protective coating is provided in cargo holds, as defined by 23.1.7 of Part II and is found in GOOD condition, the extent of close-up surveys and thickness measurements may be specially considered.

(d) Hatch Covers and Coamings

The hatch covers and coamings are to be surveyed as follows:

(i) A thorough inspection of the items listed in 2.12.1(b) is to be carried out, in addition to all hatch covers and coamings.

(ii) Checking of the satisfactory operation of all mechanically operated hatch covers is to be made, including:

(1) stowage and securing in open condition;

(2) proper fit and efficiency of sealing in closed condition;

(3) operational testing of hydraulic and power components, wires, chains, and link drives.

(iii) Checking the effectiveness of sealing arrangements of all hatch covers by hose testing or equivalent.

(iv) Close-up survey and thickness measurement (for accessible parts) of the hatch cover and coaming plating and stiffeners is to be carried out as given in Table I 2-5B and Table I 2-3C.

(e) Extent of Overall and close-up survey

(i) An overall survey of all tanks and spaces is to be carried out at each Special Survey.
Fuel oil tanks in the cargo length area are to be surveyed as follows:

Special Survey No.1 Age ≤ 5	Special Survey No.2 5 < Age ≤ 10	Special Survey No.3 10 < Age ≤ 15	Special Survey No.4 and subsequent 15 < Age
0	1	2	Half, minimum 2

Notes:
1. These requirements apply to tanks of integral (structural) type.
2. If a selection of tanks is accepted to be examined, then different tanks are to be examined at each Special Survey, on a rotational basis.
3. Peak tanks (all uses) are subject to internal examination at each Special Survey.
4. At Special Survey No.3 and subsequent Special Surveys, 1 deep tank for fuel oil in the cargo area is to be included, if fitted.

(ii) The minimum requirements for close-up surveys at Special Survey are given in Table I 2-5B.

(iii) The Surveyor may extend the close-up survey as deemed necessary taking into account the maintenance of the spaces under survey, the condition of the corrosion prevention system and where spaces have structural arrangements or details which have suffered defects in similar spaces or on similar ships according to available information.

(iv) For areas in spaces where hard protective coatings are found to be in a GOOD condition, the extent of close-up surveys according to Table I 2-5B may be specially considered. Refer also to 2.12.3(c)(ii).

(f) Extent of Thickness Measurement

(i) The minimum requirements for thickness measurement at Special Survey are given in Table I 2-3C.

For additional thickness measurement guidelines applicable to the vertically corrugated transverse watertight bulkhead between cargo hold Nos. 1 and 2 on ships subject to compliance with IACS URs S19 and S23, reference is to be made to IACS UR Z10.2 - 1.1.4 and Annex III.
For additional thickness measurement guidelines applicable to the side shell frames and brackets on ships subject to compliance with IACS UR S31, reference is to be made to IACS UR Z10.2 - 1.1.5 and Annex V.

(ii) Provisions for extended measurements for areas with Substantial Corrosion are given in Table I 2-4C and as may be additionally specified in the Survey Programme as required by 2.1.6(a). These extended thickness measurements are to be carried out before the survey is credited as completed. Suspect Areas identified at previous surveys are to be examined. Areas of substantial corrosion identified at previous surveys are to have thickness measurements taken.

For vessels built under IACS Common Structural Rules(CSR), the identified substantial corrosion areas may be:

a) protected by coating applied in accordance with the coating manufacturer's requirements and examined at annual intervals to confirm the coating in way is still in good condition, or alternatively

b) required to be measured at annual intervals.

(iii) The Surveyor may further extend the thickness measurements as deemed necessary.

(iv) For areas in tanks where hard protective coatings are found to be in a GOOD condition, the extent of thickness measurement according to Table I 2-3C may be specially considered. Refer also to 2.12.3(c)(ii).

(v) Transverse sections are to be chosen where largest reductions are suspected to occur or are revealed from deck plating measurements, one of which is to be in the amidships area.

(vi) Representative thickness measurement to determine both general and local levels of corrosion in the shell frames and their end attachments in all cargo holds and water ballast tanks is to be carried out. Thickness measurement is also to be carried out to determine the corrosion levels on the transverse bulkhead plating. The extent of thickness measurements may be specially considered provided the Surveyor is satisfied by the close-up survey, that there is no structural diminution, and the hard protective coating where applied remains efficient.

(g) Extent of Tank Testing

(i) All boundaries of water ballast tanks, deep tanks and cargo holds used for water ballast within the cargo length area are to be pressure tested. For Fuel Oil Tanks, only representative tanks are to be pressure tested.

(ii) The Surveyor may extend the tank testing as deemed necessary.

(iii) Boundaries of ballast tanks are to be tested with a head of liquid to the top of air pipes.

(iv) Boundaries of ballast holds are to be tested with a head of liquid to near to the top of hatches.

(v) Boundaries of fuel oil tanks are to be tested with a head of liquid to the highest point that liquid will rise under service conditions. Tank testing of fuel oil tanks may be specially considered based on a satisfactory external examination of the tank boundaries, and a confirmation from the Master stating that the pressure testing has been carried out according to the requirements with satisfactory results.

(vi) The testing of double bottom tanks and other spaces not designed for the carriage of liquid may be omitted, provided a satisfactory internal examination together with an examination of the tanktop is carried out.

(h) Additional Special Survey requirements after determining compliance with SOLAS XII/12 and XII/13

(i) For ships complying with the requirements of SOLAS XII/12 for hold, ballast and dry space water level detectors, the Special Survey is to include an examination and a test of the water ingress detection systems and of their alarms.

(ii) For ships complying with the requirements of SOLAS XII/13 for the availability of pumping systems, the Special Survey is to include an examination and a test of the means for draining and pumping ballast tanks forward of the collision bulkhead and bilges of dry spaces any part of which extends forward of the foremost cargo hold, and of their controls.

2.13 Hull Surveys of Chemical Tankers

Procedures for class related services, see 2.1.4 of this Chapter. Provision for surveys, see 2.1.5 of this Chapter. Preparation for enhanced survey for ESP ships, see 2.1.6 of this Chapter.

2.13.1 Annual Surveys

In addition to the applicable requirements of Annual Survey in 2.5, those items herein are to be carried out.

The survey is to consist of an examination for the purpose of ensuring, as far as practicable, that the hull and piping are maintained in a satisfactory condition and should take into account the service history, condition and extent of the corrosion prevention system of ballast tanks and areas identified in the survey report file.

(a) Examination of the Hull

(i) Examination of the hull plating and its closing appliances which is accessible.

(ii) Examination of watertight penetrations as far as practicable.

(b) Examination of weather decks

(i) Examination of cargo tank openings including gaskets, covers, coamings and flame screens.

(ii) Examination of cargo tanks pressure/vacuum valves and flame screens.

(iii) Examination of flame screens on vents to all bunker tanks.

(iv) Examination of cargo, bunker and vent piping systems, including vent masts and headers.

(c) Examination of Cargo pump rooms and pipe tunnels if fitted

(i) Examination of all pump room bulkheads for signs of chemical leakage or fractures and, in particular, the sealing arrangements of all penetrations of pump room bulkheads.

(ii) Examination of the condition of all piping systems.

(d) Examination of Ballast Tanks

(i) Examination of Ballast Tanks where required as a consequence of the results of the Special Survey (see 2.13.3(c)) and Intermediate Survey (see 2.13.2(b)(i) and 2.13.2(b)(ii)) is to be carried out. When considered necessary by the Surveyor, or when extensive corrosion exists, thickness measurements are to be carried out and if the results of these thickness measurements indicate that Substantial Corrosion is found, the extent of thickness measurements is to be increased in accordance with Table I 2-8. These extended thickness measurements are to be carried out before the survey is credited as completed. Suspect Areas identified at previous Surveys are to be examined. Areas of substantial corrosion identified at previous surveys are to have thickness measurements taken.

(e) Examination of installations, equipment and outfit

In addition to the surveys as per requirements in 2.13.1(a)~(d) above, the following installations, items of equipment and outfit listed are to be checked as to their perfect maintenance condition:

(i) On weather deck within the cargo area the following equipment, if fitted, is to be surveyed:

(1) Cargo tank hatches, including sealings and covers.

(2) The gauging devices, level alarms and overflow control with automatic closing valves.

(3) The devices for measuring the cargo tank vapour pressure.

(4) Sampling devices of cargo cooling or heating installation as well as temperature measuring devices and temperature alarm systems.

(5) Pump discharge pressure gauges and the distinctive marking of pumps, valves and cargo piping.

(6) Wheelhouse doors and wheelhouse windows, deckhouse and superstructure windows facing the cargo area (closed condition).

(ii) Cargo handling installations (including spool pieces of loading and unloading system, spray shields and drip trays, cargo hoses, etc.) arranged on the weather deck, possibly in the fore or aft area, are to be visually examined.

(iii) In cargo pump room and other enclosed spaces entered during cargo handling operations the following are to be surveyed:

(1) Remote operation of bilge system.

(2) Rescue arrangements.

(3) Ventilation systems.

(4) For fire extinguishing systems, see 2.13.1(e)(v) below.

(iv) In gas dangerous spaces and zones, the electrical equipment, including cables and their supports, is to be visually examined, particularly regarding explosion protection.

(v) The survey of fire extinguishing systems, including:

(1) External inspections of all systems for the cargo tank area and pump rooms.

(2) Checking of the foam fire extinguishing and/or water spray system on deck.

(vi) The following items, if fitted, are to be checked:

(1) Special arrangements related to damage control (e.g. sliding bulkhead doors) in accordance with the approved damage control plan (also for tanker of less than 100 m in length).

(2) Cargo sample storage spaces.

(3) Gas detection instruments.

(4) Cargo information and safety instructions.

2.13.2 Intermediate Survey

Those items which are additional to the requirements of the Annual Survey in 2.13.1 and the applicable requirements of the Intermediate Survey in 2.6 may be surveyed either at or between the 2nd and 3rd Annual Survey.

Concurrent crediting to both Intermediate Survey (IS) and Special Survey (SS) for surveys and thickness measurements of spaces are not acceptable.

(a) General

(i) The survey extent is dependent on the age of the vessel as specified in 2.13.2(b) to 2.13.2(d).

(ii) For weather decks, an examination as far as applicable of cargo, bunker, ballast, steam and vent piping systems as well as vent masts and headers is to be carried out. If upon examination there is any doubt as to the condition of the piping, the piping may be required to be pressure tested, thickness measured or both.

(b) Chemical Tankers between 5 and 10 Years of Age

The following is to apply:

(i) For ballast tanks, an overall survey of Representative Tanks selected by the Surveyor is to be carried out. If such inspections reveal no visible structural defects, the examination may be limited to a verification that the hard protective coating remains in GOOD condition.

(ii) A ballast tank is to be examined at subsequent annual intervals where:

(1) a hard protective coating has not been applied from the time of construction, or

(2) a soft or semi-hard coating has been applied, or

(3) substantial corrosion is found within the tank, or

(4) the hard protective coating is found to be in less than GOOD condition and the hard protective coating is not repaired to the satisfaction of the Surveyor.

(iii) In addition to the requirements above, suspect areas identified at previous surveys are to be examined.

(c) Chemical Tankers between 10 and 15 years of Age

The following is to apply:

(i) The requirements of the Intermediate Survey are to be to the same extent as the previous Special Survey as required in 2.13.3 and 2.1.6(a). However, pressure testing of cargo and ballast tanks is not required unless deemed necessary by the attending Surveyor.

(ii) In application of 2.13.2(c)(i) above, the Intermediate Survey may be commenced at the second Annual Survey and be progressed during the succeeding year with a view to completion at the third Annual Survey in lieu of the application of 1.6.4(c)(ii).

(iii) In application of 2.13.2(c)(i) above, an In-water survey may be considered in lieu of the requirements of 2.13.3(b).

(d) Chemical Tankers over 15 years of Age

The following is to apply:

(i) The requirements of the Intermediate Survey are to be to the same extent as the previous Special Survey as required in 2.13.3 and 2.1.6(a). However, pressure testing of cargo and ballast tanks is not required unless deemed necessary by the attending Surveyor.

(ii) In application of 2.13.2(d)(i) above, the Intermediate Survey may be commenced at the second Annual Survey and be progressed during the succeeding year with a view to completion at the third Annual Survey in lieu of the application of 1.6.4(c)(ii).

(iii) In application of 2.13.2(d)(i) above, a survey in dry dock is to be part of the Intermediate Survey.

The overall and close-up surveys and thickness measurements, as applicable, of the lower portions of the cargo tanks and water ballast tanks are to be carried out in accordance with the applicable requirements for Intermediate Surveys, if not already performed.

Note: lower portions of the cargo and ballast tanks are considered to be the parts below light ballast water line.

(e) In addition to the surveys as stipulated in 2.13.2(a)~(d), the checks listed below are to be performed. If deemed necessary by the Surveyor, a functional test is to be carried out in addition to the survey.

(i) All important piping systems in the cargo area are to be examined, e.g.:

(1) Cargo, tank cleaning, bunkering, ballast and steam pipings.

(2) Provisions for drainage of cargo tank vent lines.

(3) Bonding devices of all piping systems and independent cargo tanks.

(4) Cargo cooling systems.

(5) Cargo hoses.

(6) Tank heating systems.

(7) Spare parts for mechanical ventilation systems.

(ii) The electrical equipment in gas dangerous spaces and zones is to be surveyed with respect to the following:

(1) Protective earthing (spot checks).

(2) Integrity of certified safe type equipment.

(3) Damage to the outer sheet of cables.

(4) Function testing of pressurized equipment, and of associated alarms.

(5) Testing of insulation resistance of circuits, only when the ship is in gas free or inertised condition. If proper test reports are available on board, the readings made by the crew may be accepted.

2.13.3 Special Survey

Concurrent crediting to both Intermediate Survey (IS) and Special Survey (SS) for surveys and thickness measurements of spaces are not acceptable.

(a) General

(i) The Special Survey is to include, in addition to the requirements of the Annual Survey in 2.13.1 and the applicable requirements of the Special Survey in 2.7 , examination, tests and checks of sufficient extent to ensure that the hull and related piping, as required in 2.13.3(a)(iii) below, is in a satisfactory condition and is fit for its intended purpose for the new period of class of 5 years to be assigned, subject to proper maintenance and operation and to periodical surveys being carried out at the due dates.

(ii) All cargo tanks, ballast tanks, including double bottom tanks, pump rooms, pipe tunnels, cofferdams and void spaces bounding cargo tanks, decks and outer hull are to be examined, and this examination is to be supplemented by thickness measurement and testing as required in 2.13.3(e) and 2.13.3(f), to ensure that the structural integrity remains effective. The aim of the examination is to discover Substantial Corrosion, significant deformation, fractures, damages or other structural deterioration, that may be present.

(iii) Cargo piping on deck and cargo and ballast piping within the above tanks and spaces are to be examined and operationally tested to working pressure to attending Surveyor's satisfaction to ensure that tightness and condition remain satisfactory. Special attention is to be given to any ballast piping in cargo tanks and cargo piping in ballast tanks and void spaces, and Surveyors are to be advised on all occasions when this piping, including valves and fittings are open during repair periods and can be examined internally.

(b) Bottom Survey in dry dock

(i) A Bottom Survey in dry dock is to be a part of the Special Survey. The overall and close-up surveys and thickness measurements, as applicable, of the lower portions of the cargo tanks and ballast tanks[(1)] are to be carried out in accordance with the applicable requirements for Special Surveys, if not already performed.

Note:

(1) Lower portions of the cargo and ballast tanks are considered to be the parts below light ballast water line.

(c) Tank Protection

(i) Where provided, the condition of the corrosion prevention system of cargo tanks is to be examined.

A ballast tank is to be examined at subsequent annual intervals where:

(1) a hard protective coating has not been applied from the time of construction, or

(2) a soft or semi-hard coating has been applied, or

(3) substantial corrosion is found within the tank, or

(4) the hard protective coating is found to be in less than GOOD condition and the hard protective coating is not repaired to the satisfaction of the Surveyor.

Thickness measurements are to be carried out as deemed necessary by the Surveyor.

(d) Extent of Overall and close-up survey

(i) An overall survey of all tanks and spaces is to be carried out at each Special Survey.

(ii) The minimum requirements for close-up surveys at Special Survey are given in Table I 2-6A or Table I 2-6B. The survey of stainless steel tanks may be carried out as an overall survey supplemented by close-up survey as deemed necessary by the Surveyor.

(iii) The Surveyor may extend the close-up survey as deemed necessary taking into account the maintenance of the tanks under survey, the condition of the corrosion prevention system and also in the following cases:

(1) In particular, tanks having structural arrangements or details which have suffered defects in similar tanks or on similar ships according to available information.

(2) In tanks which have structures approved with reduced scantlings due to an approved corrosion control system.

(iv) For areas in tanks where hard protective coatings are found to be in a GOOD condition as defined in 2.1.2(l), the extent of close-up surveys according to Table I 2-6A or Table I 2-6B may be specially considered.

(e) Extent of Thickness Measurement

(i) The minimum requirements for thickness measurements at Special Survey are given in Table I 2-7. Thickness measurement of stainless steel hull structure and piping may be waived, except for clad steel plating.

(ii) Provisions for extended measurements for areas with Substantial Corrosion are given in Table I 2-8, and as may be additionally specified in the Survey Programme as required in 2.1.6(a). These extended thickness measurements are to be carried out before the survey is credited as completed. Suspect Areas identified at previous Special Surveys are to be examined. Areas of substantial corrosion identified at previous surveys are to have thickness measurements taken.

(iii) The Surveyor may further extend the thickness measurements as deemed necessary.

(iv) For areas in tanks where hard protective coatings are found to be in a GOOD condition as defined in 2.1.2(l), the extent of thickness measurements according to Table I 2-7 may be specially considered.

(v) Transverse sections are to be chosen where the largest reductions are suspected to occur or are revealed from deck plating measurements.

(vi) In cases where 2 or 3 sections are to be measured, at least one is to include a ballast tank within 0.5L amidships.

(f) Extent of Tank Testing

(i) The minimum requirements for ballast tank testing at Special Survey are given in 2.13.3(f)(iii) below and Table I 2-9. The minimum requirements for cargo tank testing at Special Survey are given in 2.13.3(f)(iv) below and Table I 2-9. Cargo tank testing carried out by the vessel's crew under the direction of the Master may be accepted by the Surveyor provided the following conditions are complied with:

(1) a tank testing procedure, specifying fill heights, tanks being filled and bulkheads being tested, has been submitted by the owner and reviewed by the Society prior to the testing being carried out;

(2) there is no record of leakage, distortion or substantial corrosion that would affect the structural integrity of the tank;

(3) the tank testing has been satisfactorily carried out within Special Survey window not more than 3 months prior to the date of the survey on which the overall or close up survey is completed;

(4) the satisfactory results of the testing is recorded in the ship's logbook;

(5) the internal and external condition of the tanks and associated structure are found satisfactory by the Surveyor at the time of the overall and close up survey.

(ii) The Surveyor may extend the tank testing as deemed necessary.

(iii) Boundaries of ballast tanks are to be tested with a head of liquid to the top of air pipes.

(iv) Boundaries of cargo tanks are to be tested to the highest point that liquid will rise under service conditions.

(v) The testing of double bottom tanks and other spaces not designed for the carriage of liquid may be omitted, provided a satisfactory internal examination together with an examination of the tanktop is carried out.

(g) Chemical Tankers over 10 Years of Age

(i) Selected steel cargo pipes outside cargo tanks and ballast pipes passing through cargo tanks are to be:

(1) Thickness measured at random or selected pipe lengths to be opened for internal inspection;

(2) Pressure tested to the maximum working pressure.

Special attention is to be given to cargo/slop discharge piping through ballast tanks and void spaces.

(h) Cargo area equipment

In addition to the requirements of the cargo system and pertinent safety devices stipulated in 2.13.2(e), the following items are to be examined:

(i) Cargo and ballast piping systems including valves and fittings, are to be inspected for corrosion, as deemed necessary by the Surveyor. Subsequently a pressure test is to be carried out.

(ii) Cargo stripping and ballast pumps are to be examined. Pressure relief valves of pumps are to be function tested.

(iii) Pressure/vacuum valves of cargo tanks are to be function tested and are to be opened up and adjusted, if deemed necessary by the Surveyor.

(iv) Tank venting systems are to be examined. Flame arresters are to be opened up as far as necessary, and cleaned.

(v) Cargo tank heating systems are to be examined and pressure tested to 1.5 times the operating pressure.

(vi) The bilge systems of pump rooms are to be examined and tested.

(vii) All ventilation systems in cargo areas, including portable fans, are to be examined and function tested.

(viii) The following equipment is to be examined and function tested:

(1) Level indicators of cargo tanks.

(2) Liquid level alarms.

(3) Overflow controls.

(4) Pressure and temperature alarms.

(5) Remote control systems of cargo pumps.

(6) Sampling arrangements for cargo tanks, if fitted.

(7) Inert gas systems, see 3.2.2 of Chapter 3.

(ix) The protection devices of electric motors in gas dangerous spaces and zones are to be examined and tested.

2.14 Hull Surveys of Double Hull Oil Tankers

Procedures for class related services, see 2.1.4 of this Chapter. Provision for surveys, see 2.1.5 of this Chapter. Preparation for enhanced survey for ESP ships, see 2.1.6 of this Chapter.

These requirements apply to surveys of hull structure and piping systems in way of cargo tanks, pump rooms, cofferdams, pipe tunnels, void spaces within the cargo area and all ballast tanks for the double hull oil tankers with **ESP** notation.

2.14.1 Annual Survey

(a) General

(i) In addition to the applicable requirements of the Annual Survey in 2.5, those items herein are to be carried out.

(ii) The survey is to consist of an examination for the purpose of ensuring, as far as practicable, that the hull and piping are maintained in a satisfactory condition and should take into account the service history, condition and extent of the corrosion prevention system of ballast tanks and areas identified in the survey report file.

(b) Examination of the hull

(i) Examination of the hull plating and its closing appliances as far as can be seen.

(ii) Examination of watertight penetrations as far as practicable.

(c) Examination of weather decks

(i) Examination of cargo tank openings including gaskets, covers, coamings and flame screens.

(ii) Examination of cargo tanks pressure/vacuum valves and flame screens.

(iii) Examination of flame screens on vents to all bunker, oily ballast and oily slop tanks.

(iv) Examination of cargo, crude oil washing, bunker and vent piping systems, including vent masts and headers.

(d) Examination of cargo pump rooms and pipe tunnels, if fitted

(i) Examination of all pump room bulkheads for signs of oil leakage or fractures and, in particular, the sealing arrangements of all penetrations of pump room bulkheads.

(ii) Examination of the condition of all piping systems.

(e) Examination of ballast tanks

(i) Examination of ballast tanks where required as a consequence of the results of the Special Survey (see 2.14.3(b)) and Intermediate Survey (see 2.14.2(b)(i) and 2.14.2(b)(ii)) is to be carried out. When considered necessary by the Surveyor, or when extensive corrosion exists, thickness measurement are to be carried out and if the results of these thickness measurements indicate that Substantial Corrosion is found, the extent of thickness measurements is to be increased in accordance with Table I 2-15. These extended thickness measurements are to be carried out before the survey is credited as completed. Suspect Areas identified at previous surveys are to be examined. Areas of substantial corrosion identified at previous surveys are to have thickness measurements taken.

For ships built under IACS Common Structural Rules, the identified substantial corrosion areas are required to be examined and additional thickness measurements are to be carried out.

2.14.2 Intermediate Survey

Concurrent crediting to both Intermediate Survey (IS) and Special Survey (SS) for surveys and thickness measurements of spaces are not acceptable.

(a) General

(i) In addition to the requirements of Annual Survey in 2.14.1 and the applicable requirements of the Intermediate Survey in 2.6, those items herein are to be carried out.

(ii) The survey extent is dependent on the age of the ship as specified in 2.14.2(b) to 2.14.2(d) and shown in Table I 2-12.

(iii) For weather decks, an examination as far as applicable of cargo, crude oil washing, bunker, ballast, steam and vent piping systems as well as vent masts and headers is to be carried out. If upon examination there is any doubt as to the condition of the piping, the piping may be required to be pressure-tested, thickness measured or both.

(iv) For ships built under IACS Common Structural Rules, the identified substantial corrosion areas are required to be examined and additional thickness measurements are to be carried out.

(b) Double Hull Oil Tankers between 5 and 10 years of age

The following is to apply:

(i) For tanks used for salt-water ballast, an overall survey of Representative Tanks selected by the Surveyor is to be carried out. If such inspections reveal no visible structural defects, the examination may be limited to a verification that the hard protective coating remains in GOOD condition.

(ii) A ballast tank is to be examined at subsequent annual intervals where:

(1) a hard protective coating has not been applied from the time of construction, or

(2) a soft or semi-hard coating has been applied, or

(3) substantial corrosion is found within the tank, or

(4) the hard protective coating is found to be in less than GOOD condition and the hard protective coating is not repaired to the satisfaction of the Surveyor.

(iii) In addition to the requirements above, suspect areas identified at previous surveys are to be examined.

(c) Double Hull Oil Tankers between 10 and 15 years of age.

The following is to apply:

(i) The requirements of the Intermediate Survey are to be to the same extent as the previous Special Survey as required in 2.14.3 and 2.1.6(a). However, pressure testing of cargo and ballast tanks and the requirements for longitudinal strength evaluation of Hull Girder as required in 2.1.6(f) are not required unless deemed necessary by the attending Surveyor.

(ii) In application of 2.14.2(c)(i) above, the Intermediate Survey may be commenced at the second Annual Survey and be progressed during the succeeding year with a view to completion at the third Annual Survey in lieu of the application of 1.6.4(c)(ii) of this Part.

(iii) In application of 2.14.2(c)(i) above, an under water survey may be considered in lieu of the requirements of 2.14.3(a)(iv).

(d) Double Hull Oil Tankers over 15 years of age.

The following is to apply:

(i) The requirements of the Intermediate Survey are to be to the same extent as 2.14.3 and 2.1.6(a). However, pressure testing of cargo and ballast tanks and the requirements for longitudinal strength evaluation of Hull Girder as required in 2.1.6(f) are not required unless deemed necessary by the attending Surveyor.

(ii) In application of 2.14.2(d)(i) above, the Intermediate Survey may be commenced at the second Annual Survey and be progressed during the succeeding year with a view to completion at the third Annual Survey in lieu of the application of 1.6.4(c)(ii) of this Part.

(iii) In application of 2.14.2(d)(i) above, a survey in dry dock is to be part of the Intermediate Survey. The overall and close-up surveys and thickness measurements, as applicable, of the lower portions of the cargo tanks and water ballast tanks(1) are to be surveyed in accordance with the applicable requirements for Intermediate Surveys, if not already surveyed.

Note:

(1) Lower portions of the cargo and ballast tanks are considered to be the parts below light ballast water line.

(e) Extent of overall survey and close-up survey

The extent of overall survey and close-up survey for Intermediate Survey is to be in accordance with the requirements of Table I 2-12.

(f) Extent of Thickness Measurements

(i) The extent of thickness measurements is also given in Table I 2-12.

(ii) The minimum requirements for thickness measurements at the Intermediate Survey are areas found to be Suspect Areas at the previous Special Survey.

(iii) Where Substantial Corrosion is found, the extent of the thickness measurements according to Table I 2-12 is to be increased in accordance with the requirements of Table I 2-15. These extended thickness measurements are to be carried out before the survey is credited as completed. Suspect Areas identified at previous Special Surveys are to be examined.

(iv) Areas of Substantial Corrosion identified at previous special or Intermediate Survey are to have thickness measurements taken.

2.14.3 Special Survey

(a) General

(i) The Special Survey is to include, in addition to the requirements of the Annual Survey in 2.14.1 and the applicable requirements of Special Survey in 2.7, examination, tests and checks of sufficient extent to ensure that the hull and related piping, as required in 2.14.3(a)(iii) below, is in a satisfactory condition.

(ii) All cargo tanks, ballast tanks, including double bottom tanks, pump rooms, pipe tunnels, cofferdams and void spaces bounding cargo tanks, decks and outer hull are to be examined, and this examination is to be supplemented by thickness measurement and pressure testing as required in 2.14.3(d) and 2.14.3(e), to ensure that the structural integrity remains effective. The aim of the examination is to be sufficient to discover Substantial Corrosion, significant deformation, fractures, damages or other structural deterioration that may be present.

(iii) Cargo piping on deck, including crude oil washing (COW) piping, and all piping systems within the above tanks and spaces are to be examined and operationally tested to working pressure to attending Surveyor's satisfaction to ensure that tightness and condition remain satisfactory. Where provided, special attention is to be given to any ballast piping in cargo tanks and cargo piping in ballast tanks and void spaces, and Surveyors are to be advised on all occasions when this piping, including valves and fittings are opened during repair periods and can be examined internally.

(iv) A Bottom Survey in dry dock is to be a part of the Special Survey. The overall and close-up surveys and thickness measurements, as applicable, of the lower portions of the cargo tanks and ballast tanks(1) are to be carried out in accordance with the applicable requirements for Special Surveys, if not already performed.

Note:

(1) Lower portions of the cargo and ballast tanks are considered to be the parts below light ballast water line.

(b) Tank protection

(i) Where provided, the condition of corrosion prevention of cargo tanks is to be examined.

(ii) A ballast tank is to be examined at subsequent annual intervals where:

(1) a hard protective coating has not been applied from the time of construction, or

(2) a soft or semi-hard coating has been applied, or

(3) substantial corrosion is found within the tank, or

(4) the hard protective coating is found to be in less than GOOD condition and the hard protective coating is not repaired to the satisfaction of the Surveyor.

Thickness measurements are to be carried out as deemed necessary by the Surveyor.

(c) Extent of overall and close-up survey

(i) An overall survey of all tanks and spaces is to be carried out at each Special Survey.

(ii) The minimum requirements for close-up surveys at Special Survey are given in Table I 2-13.

(iii) The Surveyor may extend the close-up survey as deemed necessary taking into account the maintenance of the tanks under survey, the condition of the corrosion prevention system and also in the following cases:

(1) In particular, tanks having structural arrangements or details which have suffered defects in similar tanks or on similar ships according to available information.

(2) In tanks which have structures approved with reduced scantlings due to an approved corrosion control system.

(iv) For areas in tanks where coatings are found in Good condition, the extent of close-up surveys according to Table I 2-13 may be specially considered.

(d) Extent of thickness measurement

(i) The minimum requirements for thickness measurements at Special Survey are given in Table I 2-14.

(ii) Provisions for extended measurements for areas with Substantial Corrosion are given in Table I 2-15, and as may be additionally specified in the survey programme as required in 2.1.6(a). These extended thickness measurements are to be carried out before the survey is credited as completed. Suspect Areas identified at previous Special Surveys are to be examined. Areas of Substantial Corrosion identified at previous Special or Intermediate Survey are to have thickness measurements taken.

For ships built under IACS Common Structural Rules, the identified substantial corrosion areas are required to be examined and additional thickness measurements are to be carried out at annual and Intermediate Surveys.

(iii) The Surveyor may further extend the thickness measurements as deemed necessary.

(iv) For areas in tanks where coating are found to be in a Good condition, the extent of thickness measurements according to Table I 2-14 may be specially considered.

(v) Transverse sections are to be chosen where the largest reductions are suspected to occur or are revealed from deck plating measurements.

(vi) In cases where 2 or 3 sections are to be measured, at least 1 is to include a ballast tank within 0.5L amidships.

In case of oil tankers of 130 m in length and upwards (as defined in the International Convention on Load Lines in force) and more than 10 years of age, for the evaluation of the ship's longitudinal strength as required in 2.1.6(f), the sampling method of thickness measurements is given in IACS Z10.4 Annex III Appendix 3.

(e) Extent of tank testing

(i) The minimum requirements for cargo and ballast tank testing at Special Survey are given in 2.14.3(e)(iii) and 2.14.3(e)(iv) below, and Table I 2-16.

Cargo tank testing carried out by the ship's crew under the direction of the Master may be accepted by the Surveyor provided the following conditions are complied with:

(1) a tank testing procedure, specifying fill heights, tanks being filled and bulkheads being tested, has been submitted by the owner and reviewed by the Society prior to the testing being carried out;

(2) there is no record of leakage, distortion or substantial corrosion that would affect the structural integrity of the tank;

(3) the tank testing has been satisfactorily carried out within Special Survey window not more than 3 months prior to the date of the survey on which the overall or close up survey is completed;

(4) the satisfactory results of the testing is recorded in the ship's logbook;

(5) the internal and external condition of the tanks and associated structure are found satisfactory by the Surveyor at the time of the overall and close up survey.

(ii) The Surveyor may extend the tank testing as deemed necessary.

(iii) Boundaries of ballast tanks are to be tested with a head of liquid to the top of air pipes.

(iv) Boundaries of cargo tanks are to be tested to the highest point that liquid will rise under service conditions.

(v) The testing of double bottom tanks and other spaces not designed for the carriage of liquid may be omitted, provided a satisfactory internal examination together with an examination of the tanktop is carried out.

2.15 Hull Surveys of Double Skin Bulk Carriers

Procedures for class related services, see 2.1.4 of this Chapter. Provision for surveys, see 2.1.5 of this Chapter. Preparation for enhanced survey for ESP ships, see 2.1.6 of this Chapter.

2.15.1 Annual Survey

(a) General

(i) In addition to the requirements of the Annual Survey in 2.5, those items herein are to be carried out.

(ii) The survey is to consist of an examination for the purpose of ensuring, as far as practicable, that the hull, weather decks, hatch covers, coamings and piping are maintained in a satisfactory condition and should take into account the service history, condition and extent of the corrosion prevention system of ballast tanks and areas identified in the survey report file.

(b) Examination of the hull

(i) Examination of the hull plating and its closing appliances as far as can be seen.

(ii) Examination of watertight penetrations as far as practicable.

(c) Examination of weather decks, hatch covers and coamings

(i) Confirmation is to be obtained that no unapproved changes have been made to the hatch covers, hatch coamings and their securing and sealing devices since the last survey.

(ii) A thorough survey of cargo hatch covers and coamings is only possible by examination in the open as well as closed positions and is to include verification of proper opening and closing operation. As a result, the hatch cover sets within the forward 25% of the ship's length and at least one additional set, such that all sets on the ship are assessed at least once in every 5-year period, are to be surveyed open, closed and in operation to the full extent on each direction at each Annual Survey, including:

(1) Stowage and securing in open condition;

(2) Proper fit and efficiency of sealing in closed condition; and

(3) Operational testing of hydraulic and power components, wires, chains, and link drives.

The closing of the covers is to include the fastening of all peripheral, and cross joint cleats or other securing devices. Particular attention is to be paid to the condition of the hatch covers in the forward 25% of the ship's length, where sea loads are normally greatest.

(iii) If there are indications of difficulty in operating and securing hatch covers, additional sets above those required by 2.15.1(c)(ii) above, at the discretion of the Surveyor, are to be tested in operation.

(iv) Where the cargo hatch securing system does not function properly, repairs are to be carried out under the supervision of the Society. Where hatch covers or coamings undergo substantial repairs, the strength of securing devices should be upgraded to comply with S21.5 of IACS UR S21.

(v) For each cargo hatch cover set, at each Annual Survey, the following items are to be surveyed:

(1) Cover panels, including side plates, and stiffener attachments that may be accessible in the open position by close-up survey (for corrosion, cracks, deformation);

(2) Sealing arrangements of perimeter and cross joints (gaskets for condition and permanent deformation, flexible seals on combination carriers, gasket lips, compression bars, drainage channels and non return valves);

(3) Clamping devices, retaining bars, cleating (for wastage, adjustment, and condition of rubber components);

(4) Closed cover locating devices (for distortion and attachment);

(5) Chain or rope pulleys;

(6) Guides;

(7) Guide rails and track wheels;

(8) Stoppers;

(9) Wires, chains, tensioners, and gypsies;

(10) Hydraulic system, electrical safety devices and interlocks; and

(11) End and interpanel hinges, pins and stools where fitted.

(vi) At each hatchway, at each Annual Survey, the coamings, with plating, stiffeners and brackets are to be checked for corrosion, cracks and deformation, especially of the coaming tops, including close-up survey.

(vii) Where considered necessary, the effectiveness of sealing arrangements may be proved by hose or chalk testing supplemented by dimensional measurements of seal compressing components.

(viii) Where portable covers, wooden or steel pontoons are fitted, checking the satisfactory condition, where applicable, of:

(1) Wooden covers and portable beams, carriers or sockets for the portable beam, and their securing devices;

(2) Steel pontoons, including close-up survey of hatchcover plating;

(3) Tarpaulins;

(4) Cleats, battens and wedges;

(5) Hatch securing bars and their securing devices;

(6) Loading pads/bars and the side plate edge;

(7) Guide plates and chocks;

(8) Compression bars, drainage channels and drain pipes (if any).

(ix) Examination of flame screens on vents to all bunker tanks.

(x) Examination of bunker and vent piping systems, including ventilators.

(d) Examination of Cargo Holds

(i) Double Skin Bulk Carriers 10-15 years of age. The following is to apply:

(1) Overall survey of two selected cargo holds.

(2) When considered necessary by the Surveyor, or where extensive corrosion exists, thickness measurement is to be carried out. If the results of these thickness measurements indicate that Substantial Corrosion is found, the extent of thickness measurements is to be increased in accordance with Table I 2-22. These extended thickness measurements are to be carried out before the Annual Survey is credited as complete. Suspect Areas identified at previous surveys are to be examined. Areas of substantial corrosion identified at previous surveys are to have thickness measurements taken.
For ships built under the IACS Common Structural Rules, the annual thickness gauging may be omitted where a protective coating has been applied in accordance with the coating manufacturer's requirements and is maintained in good condition.

(3) All piping and penetrations in cargo holds, including overboard piping, are to be examined.

(ii) Double Skin Bulk Carriers over 15 years of age. The following is to apply:

(1) Overall survey of all cargo holds.

(2) When considered necessary by the Surveyor, or where extensive corrosion exists, thickness measurement is to be carried out. If the results of these thickness measurements indicate that Substantial Corrosion is found, the extent of thickness measurements is to be increased in accordance with Table I 2-22. These extended thickness measurements are to be carried out before the Annual Survey is credited as complete. Suspect Areas identified at previous surveys are to be examined. Areas of substantial corrosion identified at previous surveys are to have thickness measurements taken.
For ships built under the IACS Common Structural Rules, the annual thickness gauging may be omitted where a protective coating has been applied in accordance with the coating manufacturer's requirements and is maintained in good condition.

(3) All piping and penetrations in cargo holds, including overboard piping, are to be examined.

(e) Examination of ballast tanks

(i) Examination of ballast tanks when required as a consequence of the results of the Special Survey and Intermediate Survey is to be carried out. When considered necessary by the Surveyor, or where extensive corrosion exists, thickness measurements are to be carried out. If the results of these

thickness measurements indicate that Substantial Corrosion is found, the extent of thickness measurements is to be increased in accordance with Table I 2-22. These extended thickness measurements are to be carried out before the survey is credited as complete. Suspect Areas identified at previous surveys are to be examined. Areas of substantial corrosion identified at previous surveys are to have thickness measurements taken.

For ships built under the IACS Common Structural Rules, the annual thickness gauging may be omitted where a protective coating has been applied in accordance with the coating manufacturer's requirements and is maintained in good condition.

(f) Additional Annual Survey Requirements after Determining Compliance with SOLAS XII/12 and XII/13

(i) For ships complying with the requirements of SOLAS XII/12 for hold, ballast and dry space water level detectors, the Annual Survey is to include an examination and a test, at random, of the water ingress detection systems and of their alarms.

(ii) For ships complying with the requirements of SOLAS XII/13 for the availability of pumping systems, the Annual Survey is to include an examination and a test, of the means for draining and pumping ballast tanks forward of the collision bulkhead and bilges of dry spaces any part of which extends forward of the foremost cargo hold, and of their controls.

2.15.2 Intermediate Survey

(a) General

(i) In addition to the requirements of Annual Survey in 2.15.1 and the applicable requirements of the Intermediate Survey in 2.6, those items herein are to be carried out.

(ii) Concurrent crediting to both Intermediate Survey (IS) and Special Survey (SS) for surveys and thickness measurements of spaces are not acceptable.

(iii) The survey extent is dependent on the age of the ship as specified in 2.15.2(b) to 2.15.2(d) and shown in Table I 2-21.

(b) Double Skin Bulk Carriers 5 - 10 years of age. The following is to apply:

(i) Ballast Tanks

(1) For tanks used for water ballast, an overall survey of representative tanks selected by the Surveyor is to be carried out. The selection is to include fore and aft peak tanks and a number of other tanks, taking into account the total number and type of ballast tanks. If such overall survey reveals no visible structural defects, the examination may be limited to verification that the corrosion prevention system remains efficient.

(2) Where POOR coating condition, corrosion or other defects are found in water ballast tanks or where a hard protective coating was not applied from the time of construction, the examination is to be extended to other ballast tanks of the same type.

(3) In ballast tanks other than double bottom tanks, where a hard protective coating is found in POOR condition, and it is not renewed, or where soft or semi-hard coating has been applied, or where a hard protective coating was not applied from the time of construction, the tanks in question are to be examined and thickness measurements carried out as considered necessary at annual intervals. When such breakdown of hard protective coating is found in ballast double bottom tanks, or where a soft or semi-hard coating has been applied, or where a hard protective coating has not been applied, the tanks in question may be examined at annual intervals. When considered necessary by the surveyor, or where extensive corrosion exists, thickness measurements are to be carried out.

(4) In addition to the requirements above, suspect areas identified at previous surveys are to be overall and close-up surveyed.

(ii) Cargo Holds

(1) An overall survey of all cargo holds is to be carried out.

(2) Where considered necessary by the Surveyor as a result of the overall survey as described in 2.15.2(b)(ii)(1) above, the survey is to be extended to include a close-up survey of those areas of structure in the cargo holds selected by the Surveyor.

(iii) Extent of Thickness Measurements

(1) Thickness measurements are to be carried out to an extent sufficient to determine both general and local corrosion levels at areas subject to close-up survey, where required as per 2.15.2(b)(ii)(2), and as provided in 2.15.2(b)(i)(3).

(2) The extent of thickness measurement may be specially considered provided the Surveyor is satisfied by the close-up survey that there is no structural diminution and the hard protective coatings are found to be in a GOOD condition.

(3) Where Substantial Corrosion is found, the extent of thickness measurements is to be increased in accordance with the requirements of Table I 2-22. These extended thickness measurements are to be carried out before the survey is credited as completed. Suspect Areas identified at previous surveys are to be examined. Areas of substantial corrosion identified at previous surveys are to have thickness measurements taken.
For ships built under IACS Common Structural Rules, the identified substantial corrosion areas may be:

a) protected by coating applied in accordance with the coating manufacturer's requirements and examined at annual intervals to confirm the coating in way is still in good condition, or alternatively

b) required to be measured at annual intervals.

(4) Where the hard protective coating in cargo holds, as defined by 23.1.7 of Part II is found to be in GOOD condition, the extent of close-up surveys and thickness measurements may be specially considered.

Explanatory note:

For existing bulk carriers, where owners may elect to coat or recoat cargo holds as noted above, consideration may be given to the extent of the close-up and thickness measurement surveys. Prior to the coating of cargo holds of existing ships, scantlings are to be ascertained in the presence of the Surveyor.

(c) Double Skin Bulk Carriers 10 – 15 years of age

The following is to apply:

(i) The requirements of the Intermediate Survey are to the same extent as the previous Special Survey as required in 2.15.3 and 2.1.6(a). However, internal examination of fuel oil tanks and pressure testing of all tanks are not required unless deemed necessary by the attending Surveyor.

(ii) In application of 2.15.2(c)(i) above, the Intermediate Survey may be commenced at the second Annual Survey and be progressed during the succeeding year with a view to completion at the third Annual Survey in lieu of the application of 1.6.4(c)(ii) of this Part.

(iii) In application of 2.15.2(c)(i) above, an In-water survey may be considered in lieu of the requirement of 2.15.3(b).

(d) Double Skin Bulk Carriers over 15 years of age

The following is to apply:

(i) The requirements of the Intermediate Survey are to be to the same extent as the previous Special Survey as required in 2.15.3 and 2.1.6(a). However, internal examination of fuel oil tanks and pressure testing of all tanks are not required unless deemed necessary by the attending Surveyor.

(ii) In application of 2.15.2(d)(i) above, the Intermediate Survey may be commenced at the second Annual Survey and be progressed during the succeeding year with a view to completion at the third Annual Survey in lieu of the application of 1.6.4(c)(ii) of this Part.

(iii) In application of 2.15.2(d)(i) above, a survey in dry dock is to be part of the Intermediate Survey. The overall and close-up surveys and thickness measurements, as applicable, of the lower portions of the cargo holds and ballast tanks are to be carried out in accordance with the applicable requirements for Intermediate Surveys, if not already performed.

Note: Lower portions of the cargo holds and ballast tanks are considered to be the parts below light ballast water line.

2.15.3 Special Survey

Concurrent crediting to both Intermediate Survey (IS) and Special Survey (SS) for surveys and thickness measurements of spaces are not acceptable.

(a) General

(i) The Special Survey is to include, in addition to the requirements of the Annual Survey in 2.15.1 and the applicable requirements of Special Survey in 2.7, examination, tests and checks of sufficient extent to ensure that the hull and related piping, as required in 2.15.3(a)(iii), is in a satisfactory condition and is fit for its intended purpose for the new period of class of 5 years to be assigned, subject to proper maintenance and operation and to periodical surveys being carried out at the due dates.

(ii) All cargo holds, ballast tanks, including double bottom and double side tanks, pipe tunnels, cofferdams and void spaces bounding cargo holds, decks and outer hull are to be examined, and this examination is to be supplemented by thickness measurement and testing as required in 2.15.3(f) and 2.15.3(g), to ensure that the structural integrity remains effective. The aim of the examination is to discover Substantial Corrosion, significant deformation, fractures, damages or other structural deterioration, that may be present.

(iii) All piping systems within the above spaces are to be examined and operationally tested to working pressure to attending Surveyor's satisfaction to ensure that tightness and condition remain satisfactory.

(iv) The survey extent of ballast tanks converted to void spaces is to be specially considered in relation to the requirements for ballast tanks.

(b) Bottom Survey in dry dock

(i) A Bottom Survey in dry dock is to be a part of the Special Survey. The overall and close-up surveys and thickness measurements, as applicable, of the lower portions of the cargo holds and ballast tanks(1) are to be carried out in accordance with the applicable requirements for Special Surveys, if not already performed.

Note:

(1) Lower portions of the cargo holds and ballast tanks are considered to be the parts below light ballast water line.

(c) Tank Protection

(i) Where provided, the condition of the corrosion prevention system of ballast tanks is to be examined. For ballast tanks, excluding double bottom tanks, where a hard protective coating is found in POOR condition, and it is not renewed, where soft or semi-hard coating has been applied, or where a hard protective coating has not been applied from the time of construction, the tanks in question are to be examined at annual intervals. Thickness measurements are to be carried out as deemed necessary by the Surveyor.

When such a breakdown of hard protective coating is found in water ballast double bottom tanks and it is not renewed, where a soft or semi-hard coating is applied, or where a hard Protective Coating has not been applied from the time of construction, the tanks in question may be examined at annual intervals. When considered necessary by the Surveyor, or where extensive corrosion exists, thickness measurements are to be carried out.

(ii) Where a hard protective coating is provided in cargo holds, as defined by 23.1.7 of Part II and is found in GOOD condition, the extent of close-up surveys and thickness measurements may be specially considered.

(d) Hatch Covers and Coamings

The hatch covers and coamings are to be surveyed as follows:

(i) A thorough inspection of the items listed in 2.15.1(c) is to be carried out, in addition to all hatch covers and coamings.

(ii) Checking of the satisfactory operation of all mechanically operated hatch covers is to be made, including:

(1) stowage and securing in open condition;

(2) proper fit and efficiency of sealing in closed condition;

(3) operational testing of hydraulic and power components, wires, chains, and link drives.

(iii) Checking the effectiveness of sealing arrangements of all hatch covers by hose testing or equivalent.

(iv) Close-up survey and thickness measurement of the hatch cover(1) and coaming plating and stiffeners is to be carried out as given in Table I 2-18 to Table I 2-20.

Note:

(1) Subject to cargo hold hatch covers of approved design which structurally have no access to the internals, close-up survey/thickness measurement shall be done of accessible parts of hatch covers structures.

(e) Extent of Overall and close-up surveys

(i) An overall survey of all tanks and spaces is to be carried out at each Special Survey.

Fuel oil tanks in the cargo length area are to be surveyed in accordance with Table I 2-~~22~~17.

(ii) The minimum requirements for close-up surveys at Special Surveys are given in Table I 2-18 for double skin bulk carriers, excluding ore carriers and in Table I 2-19 for ore carriers, respectively.

(iii) The Surveyor may extend the close-up survey as deemed necessary taking into account the maintenance of the spaces under survey, the condition of the corrosion prevention system and where spaces have structural arrangements or details which have suffered defects in similar spaces or on similar ships according to available information.

(iv) For areas in spaces where hard protective coatings are found to be in a GOOD condition, the extent of close-up surveys according to Table I 2-18 and Table I 2-19 may be specially considered, refer also to 2.15.3(c)(ii).

(f) Extent of Thickness Measurements

(i) The minimum requirements for thickness measurements at Special Surveys are given in Table I 2-20.

(ii) Provisions for extended measurements for areas with Substantial Corrosion are given in Table I 2-22 and as may be additionally specified in the Survey Programme as required by 2.1.6(a). These extended thickness measurements are to be carried out before the survey is credited as completed. Suspect Areas identified at previous surveys are to be examined. Areas of substantial corrosion identified at previous surveys are to have thickness measurements taken.

For ships built under IACS Common Structural Rules, the identified substantial corrosion areas may be:

(1) protected by coating applied in accordance with the coating manufacturer's requirements and examined at annual intervals to confirm the coating in way is still in good condition, or alternatively

(2) required to be measured at annual intervals.

(iii) The Surveyor may further extend the thickness measurements as deemed necessary.

(iv) For areas in tanks where hard protective coatings are found to be in a GOOD condition, the extent of thickness measurements according to Table I 2-20 may be specially considered. Refer also to 2.15.3(c)(ii).

(v) Transverse sections are to be chosen where the largest reductions are suspected to occur or are revealed from deck plating measurements, one of which is to be in the amidships area.

(vi) Representative thickness measurement to determine both general and local levels of corrosion in the transverse web frames in all water ballast tanks is to be carried out. Thickness measurement is also to be carried out to determine the corrosion levels on the transverse bulkhead plating. The extent of thickness measurements may be specially considered provided the Surveyor is satisfied by the close-up survey, that there is no structural diminution, and the hard protective coating where applied remains efficient.

(g) Extent of Tank Testing

(i) All boundaries of water ballast tanks, deep tanks and cargo holds used for water ballast within the cargo length area are to be pressure tested. For Fuel Oil Tanks, only representative tanks are to be pressure tested.

(ii) The Surveyor may extend the tank testing as deemed necessary.

(iii) Boundaries of ballast tanks are to be tested with a head of liquid to the top of air pipes.

(iv) Boundaries of ballast holds are to be tested with a head of liquid to near to the top of hatches.

(v) Boundaries of fuel oil tanks are to be tested with a head of liquid to the highest point that liquid will rise under service conditions. Tank testing of fuel oil tanks may be specially considered based on a satisfactory external examination of the tank boundaries, and a confirmation from the Master stating that the pressure testing has been carried out according to the requirements with satisfactory results.

(vi) The testing of double bottom tanks and other spaces not designed for the carriage of liquid may be omitted, provided a satisfactory internal examination together with an examination of the tanktop is carried out.

(h) Additional Special Survey requirements after determining compliance with SOLAS XII/12 and XII/13

(i) For ships complying with the requirements of SOLAS XII/12 for hold, ballast and dry space water level detectors, the Special Survey is to include an examination and a test of the water ingress detection systems and of their alarms.

(ii) For ships complying with the requirements of SOLAS XII/13 for the availability of pumping systems, the Special Survey is to include an examination and a test of the means for draining and pumping ballast tanks forward of the collision bulkhead and bilges of dry spaces any part of which extends forward of the foremost cargo hold, and of their controls.

2.16 Hull Surveys of Craft for FRP and Aluminum Alloys Construction

2.16.1 Annual Survey

(a) For Craft of Fiber Reinforced Plastic (FRP) Construction, in addition to the applicable requirements of 2.5 of this Part, the Annual Survey - Hull is to include the following:

(i) All accessible parts particularly liable to rapid deterioration.

(ii) The craft is to be placed in drydock or slipway and all applicable items of the Annual Survey - Hull are to be examined.

(iii) The deck-to-hull connection, and superstructure and deckhouse connections are to be examined.

(iv) The craft is to be thoroughly checked and sounded for any apparent delaminations.

Where it is thought a delamination is found, a 50 mm diameter plug is to be removed from the area and examined for core to skin adhesion and water permeation.

(b) For Craft of Aluminum Alloys Construction, in addition to the applicable requirements of 2.5 of this Part, the Annual Survey - Hull is to include the following:

(i) All parts liable to rapid deterioration, particularly areas adjacent to dissimilar metals which are in close proximity.

(ii) In lieu of ballast tanks and combined cargo/ballast tanks, internal structure of a randomly selected cargo space, dry or liquid, together with any other space deemed necessary by the Surveyor, with particular attention to be given to bilges and drain wells.

(c) For Craft subject to the IMO HSC Code, in addition to the applicable requirements of.2.5 of this Part, Bottom Survey in dry dock is to be a part of the Annual Survey as required by 2.2.1 of this Part.

2.16.2 Special Survey

In addition to the Annual Survey in 2.16.1 above and the applicable requirements of Special Survey in 2.7 of this Part, the Special Survey is to include the following:

(a) Requirements for Craft of Fiber Reinforced Plastic (FRP) Construction

(i) Engine foundations and their attachments to the hull are to be examined.

(ii) If considered necessary by the attending Surveyor, a minimum of five plugs, each 50 mm in diameter, are to be removed from the hull bottom and topsides from locations deemed appropriate from the attending Surveyor and examined for core to skin adhesion and water permeation.

(iii) The framing and holds, hull laminate of the tween deck, deep tanks, peaks, bilges and drain wells, and machinery spaces are to be cleaned and examined. Linings, ceiling, tanks, and portable ballast are to be removed as considered necessary by the attending Surveyor.

(iv) Where there is evidence of cracking, distortion, wetness, or delamination, destructive or nondestructive testing and removal and repair of the defect is subject to the discretion of the attending Surveyor.

(v) The hull, fastenings, and backing reinforcements in way of hull fittings and attachments are to be examined. Fastenings are to be withdrawn as considered necessary by the attending Surveyor.

(vi) The efficiency of hand pumps or other drainage arrangements for end spaces is to be tested.

(vii) Additionally for sailing and unpowered craft, where applicable, ballast-keel fastenings and all openings to the sea, including sanitary and other overboard discharges, together with the cocks and valves connected therewith, are to be examined while the craft is in drydock. Mast foundation and connection to the hull are to be examined.

(b) Requirements for Craft of Aluminum Alloys Construction

In addition to the applicable requirements of Special Survey in 2.7, particular attention is to be given to insulation material in joints of shell connections between dissimilar metals, which is to be found or made effective as necessary.

2.17 Surveys of Passenger Ships

2.17.1 General

These requirements apply to ships carrying more than 12 passengers. Passenger ships are subjected to the following periodical surveys:

(a) Annual Survey

(b) Intermediate Survey

(c) Bottom Survey

(d) Special Survey

(e) Boiler Survey

(f) Propeller Shaft Survey

2.17.2 Annual Survey:

In addition to the requirements of Annual Survey in 2.5, following items are also to be carried out:

(a) Hull:

(i) Bottom Survey in 2.2 of this chapter.

(ii) Inspection of the piping and valves of cross flooding system and operation tests of its remote control system. Main valves for the system are to be overhauled and inspected.

(iii) Inspection and operation test of door indicators and water leakage detectors of shell doors.

(iv) Inspection of discharge pipes and valves on shells below bulkhead deck. These valves are to be overhauled and inspected, but may be dispensed with when the bottom survey was carried out in water.

(v) Inspection and tightness test of the fixed parts of fin-stabilizers.

(vi) Inspection of all shell connections below bulkhead deck.

(vii) Inspection of gangways, all shell ports (cargo ports included), ash and rubbish chutes below the bulkhead deck.

(viii) Inspection of portlights including deadlights and securing arrangements below the bulkhead deck.

(ix) Inspection of all openings and their closures in watertight bulkheads below the bulkhead deck including watertight doors and operation of same.

(x) The escapes and any cross-flooding arrangement are to be checked.

(b) Machinery:

(i) Sea trials are to be carried out, if deemed necessary.

(ii) The ability of the propulsion machinery to reverse the direction of the thrust of propellers and the ability to stop the ship are to be tested and verified.

(iii) Inspection of main and emergency electric power, and emergency lighting system.

(iv) Inspection of flooding detection system and/or water ingress alarm system for each watertight spaces below the bulkhead deck.

(c) Fire Protection and Fire Extinguishing System:

(i) Inspection of the general alarm system, fire alarm system, fire detection system, public addressing system, fire doors, fire dampers, draft stops and fire divisions.

(ii) Inspection and operation test of water sprinkler system including it's piping, valves, alarm system and automatic starting of fire pumps. Pressure tanks, if any, are to be pressure tested.

2.17.3 Intermediate and Special Survey

In addition to the requirements of Special Surveys in 2.7 and Annual Survey in 2.17.2 above, following items are also to be complied with.

(a) Hull:

(i) Check the light weight of the ship.

The light weight of the ship is to be checked during Special Survey. If the major conversion is found during Annual Survey or Intermediate Survey, the light weight of the ship is to be checked by the attending Surveyor.

Inclining experiments are to be carried out whenever the light weight is different from record by 2% or more or the longitudinal center of gravity is different from record by 1% of ship's length or more.

(b) Bottom Survey in dry dock is to be a part of Special Survey.

While the thickness measurements is carried out, if substantial corrosion is found, the extent of thickness measurements is to be increased in accordance with the requirements of Table I 2-4A. Tanks or areas where coating was found to be in GOOD condition at the previous intermediate or periodical survey may be specially considered by the Society.

(c) For Intermediate Survey - machinery, the requirements of 2.7.2 may be dispensed with at the discretion of the Society or the attending Surveyor.

2.18 Survey of Barges

2.18.1 Annual Survey

In addition to the applicable requirements of 2.5.1, the Annual Survey is also to include the following:

(a) For barges engaged in the dry bulk cargo trade, at each Annual Survey after Special Survey No. 3, holds, with particular attention being paid to tank tops, underside of main deck and side shell plating, framing and attachments. Thickness measurements may be required and access is to be provided for inaccessible areas as considered necessary by the attending Surveyor.

(b) For manned barges Annual Survey is to include the following:

(i) Fire safety measures.

(ii) Fire extinguishers.

(iii) Power supply including emergency source of power.

(iv) Lifesaving appliances and equipment.

(v) Radio communication installation.

(vi) Windlass, anchors and chains.

(vii) Fire mains are to be pressurized to the working pressure and surveyed over their full length where accessible.

2.18.2 Intermediate Survey

In addition to the the requirements of Annual Survey in 2.18.1 above and the applicable requirements of 2.6.3, the Intermediate Survey is also to include the following:

(a) Salt water ballast spaces

In lieu of 2.6.1, an overall survey of 3 representative salt water ballast spaces including one rake tank and one upper wing tank, if applicable, and one additional space selected by the Surveyor.

(b) Deck cargo barges

At each Intermediate Survey after Special Survey No.1– hull, in addition to the required salt water ballast spaces, at least 2 void spaces, 1 port and 1 starboard, are to be examined internally. Where extensive corrosion or structural damage is found, the remaining void spaces may also be required to be examined as considered necessary by the attending Surveyor.

(c) Dry cargo barges

At each Intermediate Survey after Special Survey No.1– hull, in addition to the required salt water ballast spaces, at least 2 representative cargo holds are to be examined. Where extensive corrosion or structural damage is found, the remaining holds may also be required to be examined as considered necessary by the attending Surveyor. See 2.18.1(a).

(d) Oil/fuel oil tank barges and chemical tank barges – hull

At each Intermediate Survey after Special Survey No.2 – hull, in addition to the required salt water ballast spaces, at least 3 cargo tanks: 1 center tank, 1 port wing tank and 1 starboard wing tank, are to be examined internally and dealt with as deemed necessary by the attending Surveyor. Thickness gauging and means of access to the upper part of the tanks may be required. Where extensive corrosion or structural damage is found, the remainder of the cargo tanks may be required to be examined.

2.18.3 Special Survey

Special Survey is to be in accordance with the applicable requirements of 2.7.1 to 2.7.4 of this Chapter.

2.19 Hull and Special Equipment Survey of Mobile Offshore Unit

2.19.1 General

(a) Definition

(i) Preload Tank

A Preload Tank is a tank within the hull of a self-elevating unit. These tanks are periodically filled with salt water ballast and used to preload the footings of the unit prior to commencing drilling operations. Preload Tanks are considered equivalent to Ballast Tanks.

(ii) Excessive Diminution

Excessive Diminution is an extent of corrosion beyond allowable limits.

(iii) Propulsion Assist

Propulsion Assist are non-self-propelled Units fitted with thrusters intended to assist in manoeuvring or propelling while under tow.

2.19.2 Annual Survey

In addition to the applicable requirements of the Annual Survey in 2.5, those items herein are to be carried out.

(a) Hull, Structure and Equipment

(i) At each Annual Survey the exposed parts of the hull, deck, deck house, structures attached to the deck, derrick substructure, including supporting structure, accessible internal spaces, and the applicable parts listed below (iv)~(vii) are to be generally examined and placed in satisfactory condition as found necessary.

(ii) The Surveyors are to be satisfied at each Annual Survey that no material alterations have been made to the unit, its structural arrangements, subdivision, superstructure, fittings, and closing appliances upon which the stability calculations or the load line assignment is based.

(iii) Suspect Areas identified at previous surveys are to be examined. Thickness measurements are to be taken of the areas of substantial corrosion and the extent of thickness measurements is to be increased to determine areas of substantial corrosion. Table I 2-4A may be used as guidance for these additional thickness measurements. These extended thickness measurements are to be carried out before the annual survey is credited as completed.

(iv) All Units

The following items are to be examined:

(1) Accessible hatchways, manholes and other openings.

(2) Machinery casings and covers, companionways, and deck houses protecting openings.

(3) Portlights together with deadcovers, cargo ports and similar openings in hull sides, ends, or in enclosed superstructures.

(4) Ventilators, tank vent pipes together with flame screens, and overboard discharges from enclosed spaces.

(5) Watertight bulkheads and end bulkheads of enclosed superstructures.

(6) Closing appliances for all the above, including hatchcovers, doors, together with their respective securing devices, dogs, sill, coamings and supports.

(7) Freeing ports together with bars, shutters and hinges.

(8) Windlass and attachment of anchor racks and anchor cables.

(9) Protection of the crew, guard rails, lifelines, gangways, and deck houses accommodating crew.

(v) Surface-Type Units

In addition to the requirements of 2.19.2(a)(iv) the following items are to be examined:

The hull and deck structure around the drilling well (moon-pool) and in vicinity of any other structural changes in section, slots, steps, or openings in the deck or hull and the back-up structure in way of structural members or sponsons connecting to the hull.

(vi) Self-Elevating Units

In addition to the requirements of 2.19.2(a)(iv) the following items are to be examined:
Jack-house structures and attachments to upper hull or platform. Jacking or other elevating systems and leg guides, externally. Legs as accessible above the waterline, Plating and supporting structure in way of leg wells.

(vii) Column-Stabilized Units

In addition to the requirements of 2.19.2(a)(iv) the following items are to be examined:

Columns, diagonal and horizontal braces together with any other parts of the upper hull supporting structure as accessible above the waterline.

Note: At the 1st Annual Survey after construction, Column-Stabilized and Self -Elevating Units may be subject to examination of major structural components including non-destructive testing, as deemed necessary by the Society. If the Society deems such survey to be necessary, the extent should be agreed to by the Society and the Owner or operator prior to commencement of the Survey.

(b) Special Equipment

A general examination of hazardous areas, remote shutdown arrangements, fire fighting systems where included in the Society's Rules, self-elevating systems, piping systems, and bilge systems is to be made.

2.19.3 Special Survey

(a) Special Survey No. 1 (SS No.1) - Hull, Structure and Equipment

(i) All Units

The following parts are to be examined:

(1) The hull or platform structure including tanks, watertight bulkheads and deck, cofferdams, void spaces, sponsons, chain lockers, duct keels, helicopter deck and its supporting structure, machinery spaces, peak spaces, steering gear spaces, and all other internal spaces are to be examined externally and internally for damage, fractures, or excessive diminution. Thickness gauging of plating and framing may be required where wastage is evident or suspected.

(2) All tanks, compartments and free-flooding spaces throughout the drilling unit are to be examined externally and internally for excess wastage or damage.

(3) Internal examinations of spud cans and mats may be specially considered.

(4) Watertight integrity of tanks, bulkheads, hull, decks and other compartments is to be verified by visual inspection.

(5) Suspect areas and critical structural areas should be examined and may be required to be tested for tightness, non-destructive tested or thickness gauged.

(6) All special and primary application structures and identified critical structural areas are to be subjected to Close up survey.

(7) Tanks and other normally closed compartments are to be ventilated, gas freed and cleaned as necessary to expose damages and allow meaningful examination and thickness gauged in case of excessive diminution.

(8) Internal examination and testing of void spaces, compartments filled with foam or corrosion inhibitors, and tanks used only for lube oil, light fuel oil, diesel oil, fresh water, drinking water or other non-corrosive products may be waived provided that upon a general examination the Surveyor considers their condition to be satisfactory. External thickness gauging may be required to confirm corrosion control.

(9) Structures such as derrick substructure and supporting structure, jack-houses, deck houses, superstructures, helicopter landing areas, raw water (sea water intake) towers and their respective attachments to the deck or hull.

(10) Windlass and attachments of anchor racks and anchor cable fairleads.

(11) Foundations and supporting headers, brackets, and stiffeners for drilling related apparatus, where attached to hull, deck, superstructure or deck house.

(12) Thickness gaugings are to be carried out where wastage is evident or suspect.

(13) Where provided, the condition of corrosion prevention system of ballast tanks is to be examined. Where a hard protective coating is found in POOR condition and it is not renewed, where soft or semi-hard coating has been applied, or where a hard protective coating was not applied from time of construction, the tanks in question are to be examined at a frequency determined by the Society. Thickness measurements are to be carried out as deemed necessary by the Surveyor.

(14) Thickness measurements are to be carried out in accordance with Table I 2-27~ Table I 2-29 as applicable. The Surveyor may extend the thickness measurements as deemed necessary. When thickness measurements indicate substantial corrosion, the extent of thickness measurements is to be increased to determine areas of substantial corrosion. Table I 2-4A may be used as guidance for these additional thickness measurements. These extended thickness measurements are to be carried out before the survey is credited as completed.

(ii) Surface-type Units

In addition to the requirements of 2.19.3(a)(i) the following items are to be examined:

Structural appendages and ducts for positioning units.

(iii) Self-Elevating Units

In addition to the requirements of 2.19.3(a)(i) the following items are to be examined:

(1) All legs, including chords, diagonal and horizontal braces, gussets, racks, joints, together with leg guides. Tubular or similar type legs are to be examined externally and internally, together with internal stiffeners and pinholes as applicable.

(2) Structure in, around and under jack-house and leg wells. Non-destructive testing of these areas may be required.

(3) Leg jacking or other elevating systems externally.

(4) Leg connections to bottom mats or spud cans, including non-destructive testing of leg connections to mats or spud cans.

(5) Jetting piping systems or other external piping, particularly where penetrating mats or spud cans.

(6) Spud cans or mats. Where the spud cans or mat are partly or entirely obscured below the mud line where the Special Survey is otherwise being completed, consideration may be given to postponement of the examinations until the next Rig move.

(iv) Column-Stabilized Units

In addition to the requirements of 2.19.3(a)(i) the following items are to be examined:

Connections of columns and diagonals to upper hull, structure or platform and lower hull, structure or pontoons. Joints of supporting structure including diagonals, braces and horizontals, together with gussets and brackets. Internal continuation or back-up structure for the above. Non-destructive examination may be required of these areas.

(b) Special Survey No. 2 (SS No.2) and Subsequent Special Surveys - Hull, Structure and Equipment

These Surveys are to be at least as comprehensive as Special Survey No. 1, with special attention being given to the condition and thickness of material in high corrosion areas.

Representative gaugings will be required as Table I 2-27 ~ Table I 2-29 and Table I 2-4A. Special attention should be paid to splash zones on structure, legs or related structure, and in ballast tanks, pre-load tanks, free-flooding spaces, spud cans and mats.

(c) Special Equipment

Mobile Offshore Drilling Units may have many items of machinery and electrical equipment not found on conventional ships. Certain of these items are required for classification even if the unit is without propulsion machinery. Items to be especially examined and reported upon at all Special Surveys are as follows:

(i) Hazardous Areas - Enclosed hazardous areas such as those containing open active mud tanks, shale shakers, degassers and desanders are to be examined and doors and closures in boundary bulkheads verified as effective. Electric lighting, electrical fixtures, and instrumentation are to be examined, proven satisfactory and verified as explosion-proof or intrinsically safe. Ventilating systems including ductwork, fans, intake and exhaust locations for enclosed restricted areas are to be examined, tested and proven satisfactory. Ventilating air alarm systems to be proven satisfactory. Electrical motors are to be examined including closed-loop ventilating systems for large D-C motors. Automatic power disconnect to motors in case of loss of ventilating air is to be proved satisfactory.

(ii) Remote Shutdown Arrangements - Remote shutdown for fuel-oil transfer service pumps and ventilating equipment, together with oil tank outlet valves where required to be capable of being remotely closed are to be proved satisfactory. Emergency switch(s) for all electrical equipment including main and emergency generators, except alarm and communication systems and lighting in vital areas such as escape routes and landing platforms, are to be proved satisfactory.

(iii) Fire Fighting Systems where included in the Society's Rules - A general examination of the fire detection and extinguishing systems is to be made in order that the Surveyor may be satisfied with its efficient state. The following items are to be especially examined:

(1) Fire hoses, nozzles, and spanners at each fire station.

(2) Servicing of all portable extinguishers.

(3) Weighing and re-charging as necessary of all dry chemical and CO_2 extinguishers.

(4) Fire pumps and piping including operation and capacity.

(5) Alarm systems including fire and gas detection.

(iv) Self Elevating Systems - On self elevating type Mobile Offshore Drilling Units, the elevating systems are to be examined and reported on. Pinions and gears of the climbing pinion gear train of rack and

pinion systems are to be examined, as far as practicable, to the Surveyor's satisfaction by an effective crack detection method.

(v) Piping Systems - Piping systems used solely for drilling operations and complying either with the Society's requirements or a recognized standard are to be examined, as far as practical, operationally or hydrostatically tested to working pressure, to the satisfaction of the Surveyor.

(vi) Miscellaneous - Bilge alarm systems, if fitted, to be tested.

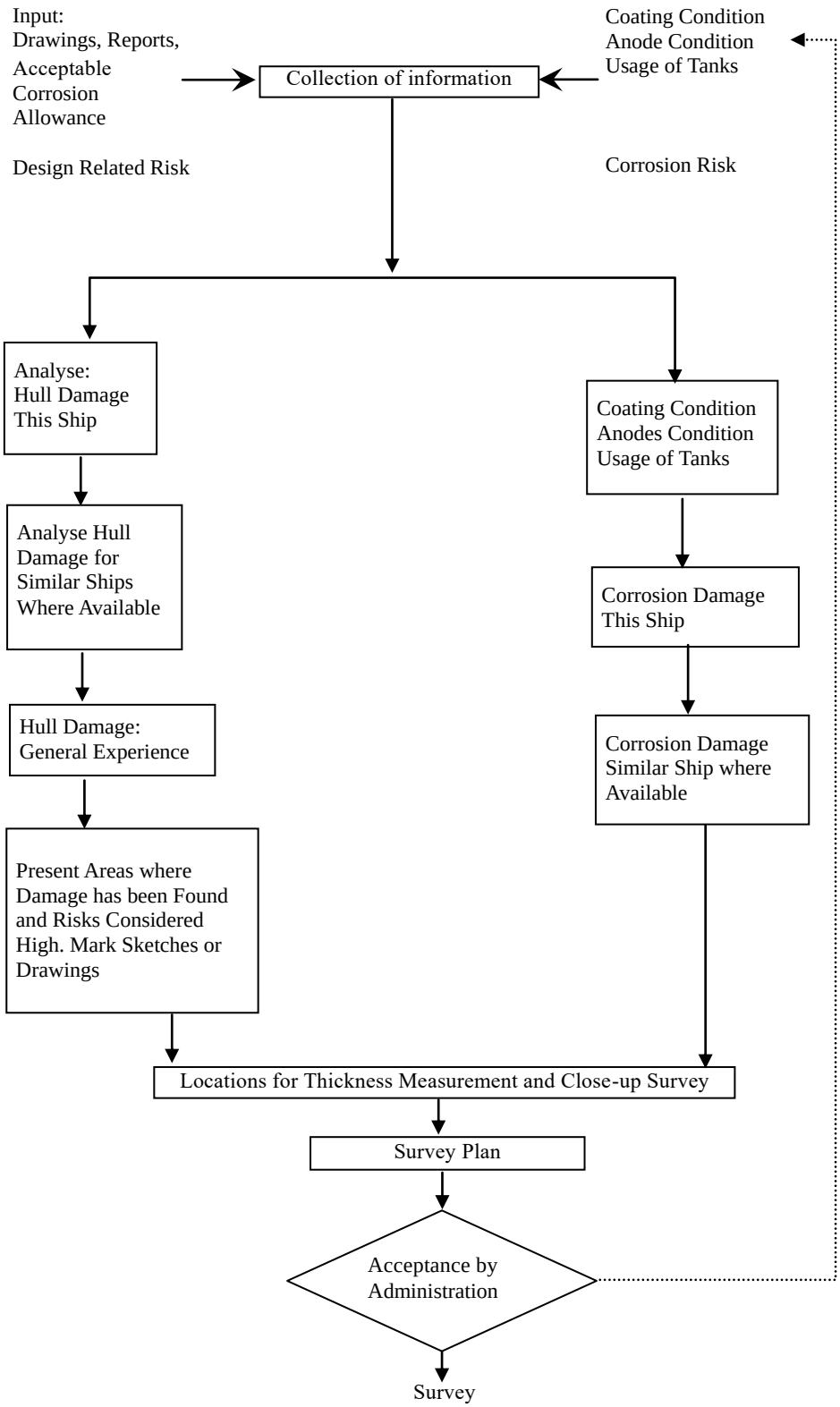

Fig. I 2-1
Technical Assessment & The Survey Planning Process

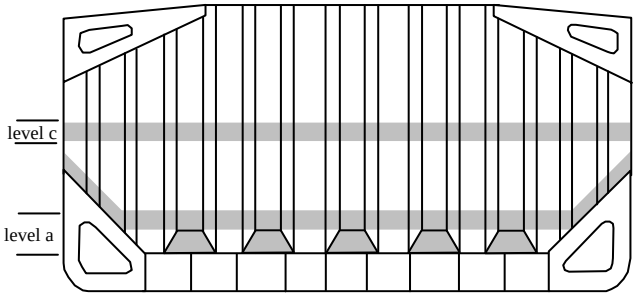

Fig. I 2-2
Ships without Lower Stool

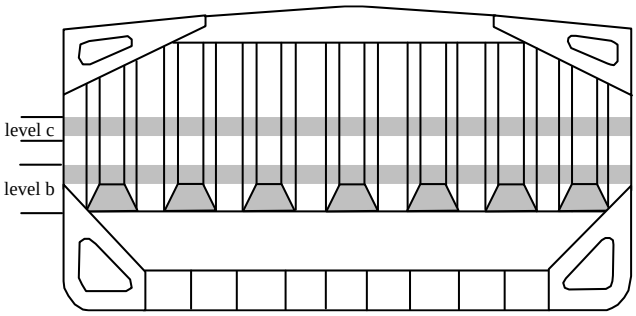

Fig. I 2-3
Ships with Lower Stool

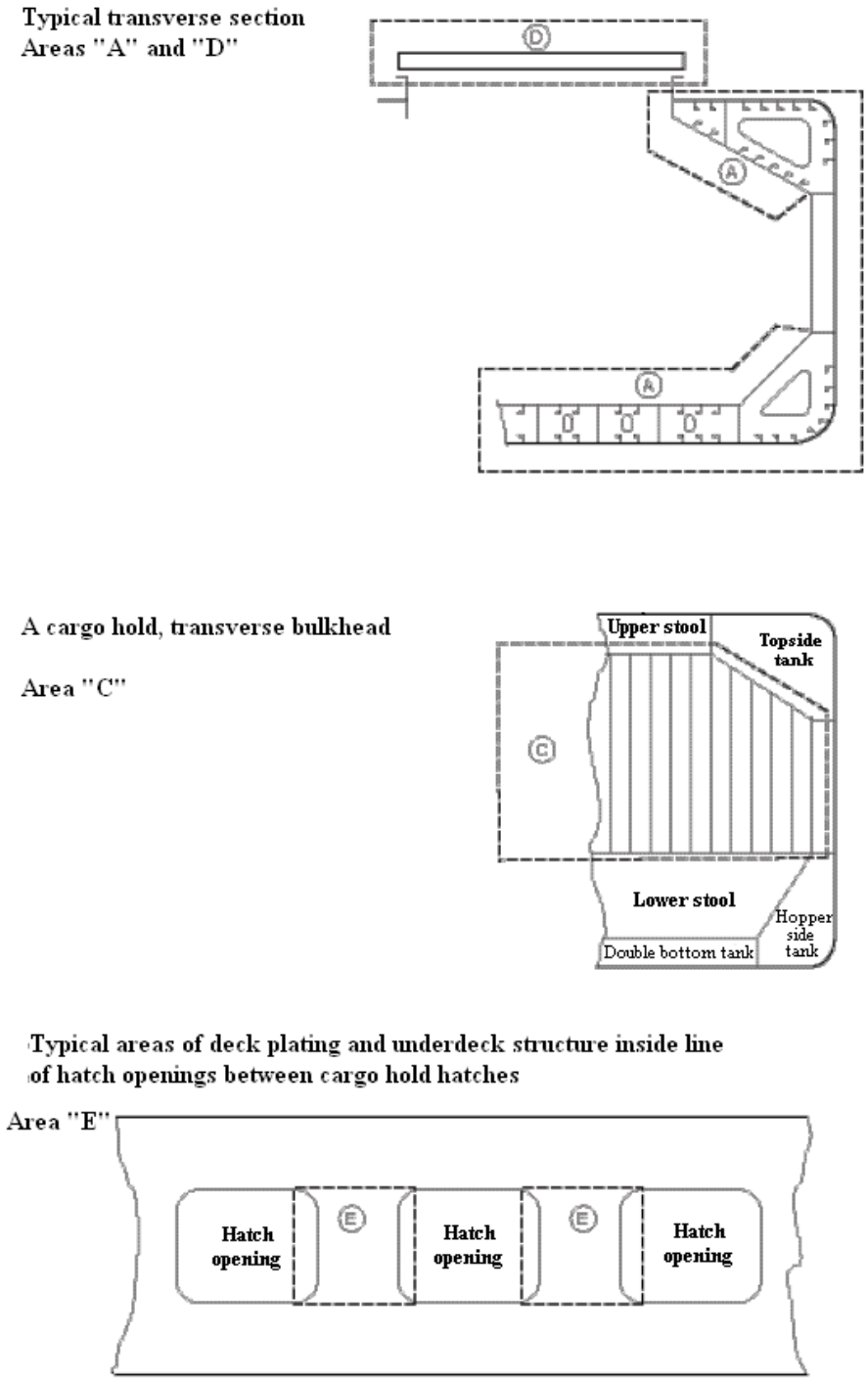

Fig. I 2-4
Close-Up Survey and Thickness Measurement Areas

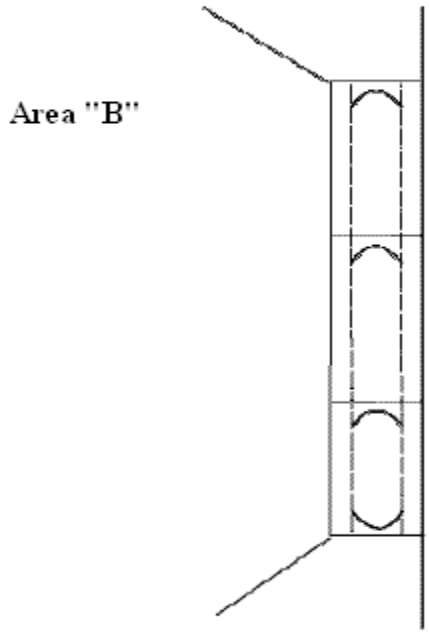

Fig. I 2-5
Close-Up Survey and Thickness Measurement Areas
Ordinary Transverse Frame in Double Skin Tank

Table I 2-1
Minimum Requirements for Internal Examination at Hull Special Surveys of Fuel Oil, Lube Oil and Fresh Water Tanks

Spaces and Tanks (1),(2),(3)	SS No. 1 (Age ≤ 5)	SS No. 2 (5 < Age ≤ 10)	SS No. 3 (10 < Age ≤ 15)	SS No. 4 and Subsequent (15 < Age)
Fuel oil bunker tanks				
- Engine room	0	0	1	1
- Cargo length area	0	1	2(4)	Half, minimum 2(4)
- If no tanks in Cargo Length Area, additional fuel tank(s) outside of Engine Room (if fitted)	0	1	1	2
Lube oil	0	0	0	1
Fresh water	0	1	All	All

Notes:
(1) These requirements apply to tanks of integral (structural) type.
(2) If a selection of tanks is accepted to be examined, then different tanks are to be examined at each Special Survey, on a rotational basis.
(3) Peak tanks (all uses) are subject to internal examination at each Special Survey.
(4) At Special Surveys No. 3 and subsequent surveys, one deep tank for fuel oil in the cargo length area is to be included, if fitted.

Table I 2-2
Minimum Requirements to Tank Testing at Hull Special Survey of Oil Tankers, Ore/Oil Carriers and etc.

SS No. 1 (Age ≤ 5)	SS No. 2 and Subsequent (5 < Age)
1. All ballast tank boundaries	1. All ballast tank boundaries
2. Cargo tank boundaries facing ballast tanks, void spaces, pipe tunnels, pump-rooms or cofferdams	2. All cargo tank bulkheads

Table I 2-3A
Minimum Requirements for Thickness Measurements at Hull Special Surveys

SS No. 1 (Age ≤ 5)	SS No. 2 (5 < Age ≤ 10)	SS No. 3 (10 < Age ≤ 15)	SS No. 4 and Subsequent (15 < Age)
1. Suspect Areas throughout the ship	1. Suspect Areas throughout the ship	1. Suspect Areas throughout the ship	1. Suspect Areas throughout the ship
	2. One transverse section of deck plating in way of a cargo space within the amidships 0.5L(5)	2. 2 transverse sections within the amidships 0.5L in way of 2 different cargo spaces(5)	2. A minimum of 3 transverse sections in way of cargo spaces within the amidships 0.5L(5)
		3. Internals in forepeak tank and after peak ballast tanks	3. Internals in forepeak and after peak ballast tanks
		4. All cargo hold hatch covers and coamings (plating and stiffeners)	4. All cargo hold hatch covers and coamings (plating and stiffeners)
			5. All exposed main deck plating full length
			6. Representative exposed superstructure deck plating (poop, bridge, and forecastle deck)
			7. Lowest strake and strakes in way of tween decks of all transverse bulkheads in cargo spaces together with internals in way(5)
			8. All wind- and water strakes, port and starboard, full length
			9. All keel plates full length. Also, additional bottom plates in way of cofferdams, machinery space, and aft end of tanks
			10. Plating of sea chests. Shell plating in way of overboard discharges as considered necessary by the attending Surveyor

Notes:

(1) Thickness measurement locations are to be selected to provide the best representative sampling of areas likely to be most exposed to corrosion, considering cargo and ballast history and arrangement and condition of protective coatings.

(2) Thickness measurements of internals may be specially considered by the Surveyor if the protective coating is in Good condition.

(3) For ships less than 100 meters in length, the number of transverse sections required at Special Survey No. 3 may be reduced to 1, and the number of transverse sections required at Subsequent Special Surveys may be reduced to 2.

(4) For ships more than 100 meters in length, at Special Survey No. 3, thickness measurements of exposed deck plating within amidships 0.5 L may be required.

(5) For ships without defined cargo spaces, thickness measurements are to be taken at the appropriate, most onerous locations selected to provide the best representative sampling of areas likely to be exposed to corrosion the most.

(6) Subject to cargo hold hatch covers of approved design which structurally have no access to the internals, thickness measurement shall be done of accessible parts of hatch covers structures.

Table I 2-3B
Minimum Requirements for Thickness Measurements
at Hull Special Survey of Oil Tankers, Ore/Oil Carriers and etc.

SS No. 1 (Age ≤ 5)	SS No. 2 (5 < Age ≤ 10)	SS No. 3 (10 < Age ≤ 15)	SS No. 4 and Subsequent (15 < Age)
1. Suspect Areas	1. Suspect Areas	1. Suspect Areas	1. Suspect Areas
2. One section of deck plating for the full beam of the ship within the cargo area (in way of a ballast tank, if any, or a cargo tank used primarily for water ballast)	2. Within the cargo area: a. Each deck plate b. 1 Transverse section	2. Within the cargo area: a. Each deck plate b. 2 Transverse sections(1) c. All wind and water strakes	2. Within the cargo area: a. Each deck plate b. 3 Transverse sections(1) c. Each bottom plate
	3. Selected wind and water strakes outside the cargo area	3. Selected wind and water strakes outside the cargo area	3. All wind and water strakes, full length
4. Measurements, for general assessment and recording of corrosion pattern, of those structural members subject to close-up survey according to Table I 2-5A	4. Measurements, for general assessment and recording of corrosion pattern, of those structural members subject to close-up survey according to Table I 2-5A	4. Measurements, for general assessment and recording of corrosion pattern, of those structural members subject to close-up survey according to Table I 2-5A	4. Measurements, for general assessment and recording of corrosion pattern, of those structural members subject to close-up survey according to Table I 2-5A

Note:
(1) At least 1 section is to include a ballast tank within 0.5L amidships.

Table I 2-3C
Minimum Requirement for Thickness Measurement at Hull Special Surveys of Bulk Carriers

SS No. 1 (Age ≤ 5)	SS No. 2 (5 < Age ≤ 10)	SS No. 3 (10 < Age ≤ 15)	SS No. 4 and Subsequent (15 < Age)
1. Suspect Areas	1. Suspect Areas	1. Suspect Areas	1. Suspect Areas
	2. Within the cargo length: a. 2 transverse section of deck plating outside line of cargo openings	2. Within the cargo length: a. Each deck plate outside line of cargo hatch openings b. 2 Transverse Sections, 1 in the amidship area, outside line of cargo hatch opening c. all wind and water strakes	2. Within the cargo length: a. Each deck plate outside line of cargo hatch openings b. 3 transverse sections, 1 in the amidship area, outside line of cargo hatch opening. c. Each bottom plate
	3. Wind and water strakes in way of the 2 transverse sections considered above Selected wind and water strakes outside the cargo length area	3. Selected wind and water strakes outside the cargo length area	3. All wind and water strakes, full length
	4. Measurement for, general assessment and recording of corrosion pattern, of those structural members subject to close-up survey according to Table I 2-5B	4. Measurement for, general assessment and recording of corrosion pattern, of those structural members subject to close-up survey according to Table I 2-5B	4. Measurement for, general assessment and recording of corrosion pattern, of those structural members subject to close-up survey according to Table I 2-5B
		5. Additional thickness measurement applicable to the vertically corrugated transverse watertight bulkhead between cargo hold Nos. 1 and 2 on ships subject to compliance with IACS URs S19 and S23	5. Additional thickness measurement applicable to the vertically corrugated transverse watertight bulkhead between cargo hold Nos. 1 and 2 on ships subject to compliance with IACS URs S19 and S23
	5. Additional thickness measurement applicable to the side shell frames and brackets on ships subject to compliance with IACS UR S31	6. Additional thickness measurement applicable to the side shell frames and brackets on ships subject to compliance with IACS UR S31	6. Additional thickness measurement applicable to the side shell frames and brackets on ships subject to compliance with IACS UR S31
		7. All cargo hold hatch covers and coaming (plate & stiffener)	7. All cargo hold hatch covers and coaming (plate & stiffener)
		8. Internals in fore/afterpeak tanks, including plating and stiffeners of bulkheads	8. Internals in fore/afterpeak tanks, including plating and stiffeners of bulkheads
			9. All exposed main deck plating and Representative exposed first tier superstructure deck plating
			10. All keel and bottom plates, full length
			11. Duct keel or pipe tunnel plating and internals
			12. Sea chest plating. Shell plating in way of overboard discharges as necessary by the attending Surveyor.

Table I 2-4A
Guidance for Additional Thickness Measurements in way of Substantial Corrosion

Structural Member	Extent of Measurement	Pattern of Measurement
Plating	Suspect area and adjacent plates	5 point pattern over 1 m^2
Stiffeners	Suspect area	3 measurements each in line across web and flange

Table I 2-4B (1/2)
Requirements for Extent of Thickness Measurement at Those Areas of Substantial Corrosion at Hull Special Survey of Oil Tankers, Ore/Oil Carriers and etc. within the Cargo Length Area

Structural member	Extent of measurement	Pattern of measurement
Bottom Structure		
1. Bottom plating	Minimum of 3 bays across tank aft bay Measurements around and under all bell mouths	5 point pattern for each panel between longitudinals and webs
2. Bottom Longitudinals	Minimum of 3 longitudinals in each bay where bottom plating measured	3 measurements in line across flange and 3 measurements on vertically web
3. Bottom girders and brackets	At fore and aft transverse bulkhead bracket toes and in center of tanks	Vertical line of 1 measurements on web plating with 1 measurement between each panel stiffener, or a minimum of 3 measurements 2 measurements across face flat 5 point pattern on girder/bulkhead brackets
4. Bottom transverse webs	3 webs in bays where bottom plating measured, with measurements at both ends and middle	5 points pattern over 2 m^2 area 1 measurements on face flat
5. Panel stiffening	Where provided	1 measurements
Deck Structure		
1. Deck plating	2 bands across tank	Minimum of 3 measurements per plate per band
2. Deck longitudinals	Minimum of 3 longitudinals each of two bays	3 measurements in line vertically on webs, and 2 measurements on flange (if fitted)
3. Deck girders and brackets	At fore and aft transverse bulkhead, bracket toes and in center of tanks	Vertical line of 1 measurements on web plating with 1 measurement between each panel stiffener, or a minimum of 3 measurements 2 measurements across face flat 5-point pattern on girder/bulkhead brackets
4. Deck transverse webs	Minimum of 2 webs, with measurements at middle and both ends of span	5-point pattern over about 2 m^2 areas 1 measurements on face flat
5. Panel stiffening	Where provided	1 measurements

Table I 2-4B (2/2)
Requirements for Extent of Thickness Measurement at Those Areas of Substantial Corrosion at Hull Special Survey of Oil Tankers, Ore/Oil Carriers and etc. within the Cargo Length Area

Structural member	Extent of measurement	Pattern of measurement
Side Shell and Longitudinal Bulkheads		
1. Deckhead and bottom strakes, and strakes in way of stringer platforms	Plating between each pair of longitudinals in a minimum of 3 bays	1 measurement
2. All other strakes	Plating between every third pair of longitudinals in same 3 bays	1 measurement
3. Longitudinals on deckhead and bottom strakes	Each longitudinal in same 3 bays	3 measurements across web and 1 measurement on flange
4. Longitudinals - all others	Every third longitudinal in same 3 bays	3 measurements across web and 1 measurement on flange
5. Longitudinals - brackets	Minimum of 3 at top, middle and bottom of tank in same 3 bays	5-point pattern over area of bracket
6. Web frames and cross ties	3 webs with minimum of 3 locations on each web, including in way of cross tie connections	5-point pattern over about 2 m^2 area, plus 1 measurements on web frame and cross ties face flats
Transverse Bulkheads and Swash Bulkheads		
1. Deckhead and bottom strakes, and strakes in way of stringer platforms	Plating between pair of stiffeners at 3 locations: approx. 1/4, 1/2 and 3/4 width of tank	5-point pattern between stiffeners over 1 m length
2. All other strakes	Plating between pair of stiffeners at middle location	1 measurement
3. Strakes in corrugated bulkheads	Plating for each change of scantling at center of panel and at flange of fabricated connection	5-point pattern over about 1 m^2 of plating
4. Stiffeners	Minimum of 3 typical stiffeners	For web, 5-point pattern over span between bracket connections (2 measurements across web at each bracket connection and 1 at center of span) For flange, 1 measurements at each bracket toe and at center of span
5. Brackets	Minimum of 3 at top, middle and bottom of tank	5-point pattern over areas of bracket
6. Deep webs and girders	Measurements at toe of bracket and at center of span	For web, 5 point pattern over about 1 m^2 3 measurements across face flat.
7. Stringer platforms	All stringers with measurements at both ends and middle	5-point pattern over 1 m^2 of area plus 1 measurements near bracket toes and on face flats

Table I 2-4C (1/2)
Requirements for Extent of Thickness Measurement at Those Areas of Substantial Corrosion at Hull Special Survey of Bulk Carriers within the Cargo Area

Structural member	Extent of measurement	Pattern of measurement
Shell structures		
1. Bottom and side shell plating	a. Suspect plate, plus 4 adjacent plates b. See other tables for particulars on gauging in way of tanks and cargo holds	a. 5 point pattern for each panel between longitudinals
2. Bottom / Side shell longitudinals	Minimum of 3 longitudinals in way of Suspect Areas	3 measurements in line across web 3 measurements on flange
Transverse bulkheads in cargo holds		
1. Lower stool	a. Transverse band within 25 mm of welded connection to inner bottom b. Transverse band within 25 mm of welded connection to shelf plate	a. 5 point between stiffeners over 1 m length b. Ditto
2. Transverse bulkhead	a. Transverse band at approximately mid height b. Transverse band at part of bulkhead adjacent to upper deck or below upper stool shelf plate (for those ships fitted with upper stools)	a. 5 point pattern over 1 m^2 of plating b. 5 point pattern over 1 m^2 of plating
Deck structure including cross strips, main cargo hatchways, hatch covers, coamings and topside tanks		
1. Cross deck strip plating	Suspect cross deck strip plating	a. 5 point pattern between underdeck stiffeners over 1 m length
2. Underdeck stiffeners	a. Transverse members b. Longitudinal member	a. 5 point pattern at each end and mid span b. 5 point pattern on both web and flange
3. Hatch covers	a. Side and end skirts, each 3 locations b. 3 longitudinal bands, outboard strakes (2) and centerline strake (1)	a. 5 point pattern at each location b. 5 point measurement each band
4. Hatch coamings	Each side and end of coaming, one band lower 1/3, one band upper 2/3 of coaming	5 point measurement each band i.e. end or side coaming
5. Topside water ballast tanks	a. Watertight transverse bulkheads i. lower 1/3 of bulkhead ii. upper 2/3 of bulkhead iii. stiffeners	 i. 5 point pattern over 1 m^2 of plating ii. 5 point pattern over 1 m^2 of plating iii. 5 point pattern over 1 m length
	b. 2 representative swash transverse bulkheads i. lower 1/3 of bulkhead ii. upper 2/3 of bulkhead iii. stiffeners	 i. 5 point pattern over 1 m^2 of plating ii. 5 point pattern over 1 m^2 of plating iii. 5 point pattern over 1 m length
	c. 3 representative bays of slope plating i. lower 1/3 of tank ii. upper 2/3 of tank	 i. 5 point pattern over 1 m^2 of plating ii. 5 point pattern over 1 m^2 of plating
	d. Longitudinals, suspect and adjacent	5 point pattern both web and flange over 1 m length
6. Main deck plating	Suspect plates and adjacent in item 4	5 point pattern over 1 m^2 of plating
7. Main deck longitudinals	Minimum of 3 longitudinals where plating measured	5 point pattern on both web and flange over 1 m length
8. Web frames / Transverses	Suspect plates	5 point pattern over 1 m^2

Table I 2-4C (2/2)
Requirements for Extent of Thickness Measurement at Those Areas of Substantial Corrosion at Hull Special Survey of Bulk Carriers within the Cargo Area

Structural member	Extent of measurement	Pattern of measurement
Double bottom and hopper structure		
1. Inner / Double bottom plating	Suspect plate plus all adjacent plates	5 point pattern for each panel between longitudinals over 1 m length
2. Inner / Double bottom longitudinals	3 longitudinals where plates measured	3 measurements in line across web and 3 measurements on flange
3. Longitudinal Girders or Transverse floors	Suspect plates	5 point pattern over about 1 m^2
4. Watertight Bulkheads (WT Floors)	a. lower 1/3 of tank b. upper 2/3 of tank	a. 5 point pattern over 1 m^2 of plating b. 5 point pattern alternate plates over 1 m^2 of plating
5. Web Frames	Suspect plate	5 point pattern over 1 m^2 of plating
6. Bottom / side shell longitudinals	Minimum of 3 longitudinals in way of Suspect Areas	3 measurements in line across web 3 measurements on flange
Cargo holds		
1. Side Shell frames	Suspect frame and each adjacent	a. At each end and mid span: 5 point pattern of both web and flange b. 5 point pattern within 25 mm of welded attachment to both shell and lower slope plate

Table I 2-5A
Minimum Requirements for Close-up Surveys
at Hull Special Survey of Oil Tankers, Ore/Oil Carriers and etc.

SS No. 1 (Age ≤ 5)	SS No. 2 (5 < Age ≤ 10)	SS No. 3 (10 < Age ≤ 15)	SS No. 4 and Subsequent (15 < Age)
(A) 1 web frame ring in a ballast wing tank, if any, or a cargo wing tank used primarily for water ballast (B) 1 deck transverse in a cargo oil tank (D) 1 transverse bulkhead in a ballast tank (D) 1 transverse bulkhead in a cargo oil wing tank (D) 1 transverse bulkhead in a cargo oil center tank	(A) All web frame rings in a ballast wing tank, if any, or a cargo wing tank used primarily for water ballast (B) 1 deck transverse in each of the remaining ballast tanks, if any (B) 1 deck transverse in a cargo wing tank (B) 1 deck transverse in 2 cargo center tanks (C) Both transverse bulkheads in a wing ballast tank, if any, or a cargo wing tank used primarily for water ballast (D) 1 transverse bulkhead in each remaining ballast tank (D) 1 transverse bulkhead in a cargo oil wing tank (D) 1 transverse bulkhead in 2 cargo center tanks	(A) All web frame rings in all ballast tanks (A) All web frame rings in a cargo wing tank (A) A minimum of 30% of all web frame rings in each remaining cargo wing tank(1) (C) All transverse bulkheads in all cargo and ballast tanks (E) A minimum of 30% of deck and bottom transverses including adjacent structural members in each cargo center tank(1) (F) As considered necessary by the Surveyor	1. As Special Survey No. 3 (10 < Age ≤ 15) 2. Additional transverses included as deemed necessary by the Society

(A) ~ (F) are areas to be subjected to close-up surveys.
(A) Complete transverse web frame ring including adjacent structural members
(B) Deck transverse including adjacent deck structural members
(C) Transverse bulkhead complete - including girder system and adjacent members
(D) Transverse bulkhead lower part - including girder system and adjacent structural members
(E) Deck and bottom transverse including adjacent structural members
(F) Additional complete transverse web frame ring
Notes:
(1) The 30% is to be rounded up to the next whole integer.

Table I 2-5B
Minimum Requirement for Close-up Survey at Hull Special Surveys of Bulk Carriers

SS No. 1 (Age ≤ 5)	SS No. 2 (5 < Age ≤ 10)	SS No. 3 (10 < Age ≤ 15)	SS No. 4 and Subsequent (15 < Age)
(A) 25% of shell frames in the forward cargo hold at representative positions (A) selected frames in remaining cargo holds (B) 1 transverse web with associated plating and longitudinals in 2 representative water ballast tanks of each type (i.e. topside, or hopper side tank). (C) 2 selected cargo hold transverse bulkheads, including internal structure of upper and lower stools, where fitted. (D) All cargo hold hatch covers and coamings (plating and stiffeners).	(A) All shell frames in the forward cargo hold and 25% of shell frames in each of the remaining cargo holds, including upper and lower end attachments and adjacent shell plating. For Bulk Carriers 100,000 DWT and above, all shell frames in the forward cargo hold and 50% of shell frames in each of the remaining cargo holds, including upper and lower end attachments and adjacent shell plating. (B) 1 transverse web with associated plating and longitudinals in each water ballast tank. (B) forward and aft transverse bulkhead in 1 ballast tank, including stiffening system. (C) All cargo hold transverse bulkheads including internal structure of upper and lower stools, where fitted. (D) All cargo hold hatch covers and coamings (plating and stiffeners). (E) All deck plating and under deck structure inside line of hatch openings between all cargo hold hatches.	(A) All shell frames in the forward and one other selected cargo hold and 50% of shell frames in each of the remaining cargo holds, including upper and lower end attachments and adjacent shell plating (B) All transverse webs with associated plating and longitudinals in each water ballast tank. (B) All transverse bulkheads in ballast tanks, including stiffening system. Areas (C), (D) and (E) as for Special Survey No. 2	(A) All shell frames in all cargo holds including upper and lower end attachments and adjacent shell plating. Areas (B) ~ (E) as for Special Survey No. 3

(A) ~ (E) are areas to be subjected to Close-up Surveys.

(A) Cargo hold transverse frames

(B) Transverse web frame or watertight transverse bulkhead in water ballast tanks

(C) Cargo hold transverse bulkheads plating, stiffeners and girders

(D) Cargo hold hatch covers and coamings. For cargo hold hatch covers of approved design which structurally have no access to the internals, Close-up Survey/ thickness measurement shall be done of accessible parts of hatch covers' structures.

(E) Deck plating inside line of hatch openings between cargo hold hatches

Notes: Close-up survey of transverse bulkheads to be carried out at 4 levels:

Level (a): Immediately above the inner bottom and immediately above the line of gussets (if fitted) and shedders for ships without lower stool

Level (b): Immediately above and below the lower stool shelf plate (for those ships fitted with lower stools), and immediately above the line of the shedder plates

Level (c): About mid-height of the bulkhead

Level (d): Immediately below the upper deck plating and immediately adjacent to the upper wing tank, and immediately below the upper stool shelf plate for those ships fitted with upper stools, or immediately below the topside tanks

Table I 2-6A
Minimum Requirements for Close-up Survey at Hull Special Survey of Single Skin Chemical Tankers

SS No. 1 (Age ≤ 5)	SS No. 2 (5 < Age ≤ 10)	SS No. 3 (10 < Age ≤ 15)	SS No. 4 and Subsequent (15 < Age)
A 1 web frame ring in a ballast wing tank	A All web frame rings in a ballast wing tank or double bottom ballast tank(1)	A All web frame rings - in all ballast tanks A All web frame rings - in a cargo wing tank	1. As Special Survey No.3
B 1 deck transverse in a cargo tank or on deck	B 1 deck transverse in each remaining ballast tank or on deck B 1 deck transverse in a cargo wing tank or on deck B 1 deck transverse in 2 cargo center tanks or on deck	A 1 web frame ring - in each remaining cargo tank	2. Additional transverse areas as deemed necessary by the Society
D 1 transverse bulkhead - lower part in a ballast tank D 1 transverse bulkhead - lower part in a cargo wing tank D 1 transverse bulkhead - lower part in a cargo centre tank(2)	C Both transverse bulkheads in a ballast wing tank	C All transverse bulkheads - in all cargo tanks C All transverse bulkheads - in all ballast tanks	
	D 1 Transverse Bulkhead - lower part in each remaining ballast tank D 1 Transverse Bulkhead - lower part in 2 cargo center tanks(2) D 1 Transverse Bulkhead - lower part in a cargo wing tank		

A~D are areas to be subjected to close-up surveys and thickness measurements. (See IACS URZ10.3, Fig. 2.1 and 2.2)

A Complete transverse web frame ring including adjacent structural members.

B Deck transverse including adjacent deck structural members.

C Transverse bulkhead complete – including girder system and adjacent structural members.

D Transverse bulkhead lower part – including girder system and adjacent structural members.

Notes:

(1) Ballast double hull tank: means double tank plus double side tank plus double deck tank, as applicable, even if these tanks are separate.

(2) Where no center cargo tanks are fitted (as in case of center longitudinal bulkhead), transverse bulkheads in wing tanks are to be surveyed.

Table I 2-6B
Minimum Requirements for Close-up Survey at Hull Special Survey of Double Skin Chemical Tankers

SS No. 1 (Age ≤ 5)	SS No. 2 (5 < Age ≤ 10)	SS No. 3 (10 < Age ≤ 15)	SS No. 4 and Subsequent (15 < Age)
(1) 1 web frame ring in a ballast double hull tank [1]	(1) All web frame rings in a ballast wing tank or ballast double hull tank [1]	(1) All web frame rings - in all ballast tanks (7) All web frame rings - in a cargo wing tank	As Special Survey No.3
(2) 1 deck transverse - in a cargo tank or on deck	(6) The knuckle area and the upper part (3 m approx) of 1 web frame in each remaining ballast tank	(7) 1 web frame ring in each - remaining cargo tank	Additional transverse areas as deemed necessary by the Society
(4) 1 transverse bulkhead - in a ballast tank [1]	(2) 1 deck transverse - in 2 cargo tanks	(3) All transverse bulkheads - in all cargo tanks (4) All transverse bulkheads - in all ballast tanks	
(5) 1 transverse bulkhead - in a cargo wing tank (5) 1 transverse bulkhead - in a cargo centre tank [2]	(4) 1 transverse bulkhead - in each ballast tank(1) (5) 1 transverse bulkhead - in 2 cargo center tanks [2] (5) 1 transverse bulkhead - in a cargo wing tank		

(1) ~ (7) are areas to be subjected to Close-up Surveys and thickness measurements. (See IACS URZ10.3, Fig. 2.1 ~ 2.3)

(1) Web frame in a ballast tank means vertical web in side tank, hopper web in hopper tank, floor in double bottom tank and deck transverse in double deck tank (where fitted), including adjacent structural members. In fore and aft peak tanks web frame means a complete transverse web frame ring including adjacent structural members.

(2) Deck transverse, including adjacent deck structural members (or external structure on deck in way of the tank, where applicable).

(3) Transverse bulkhead complete in cargo tanks, including girder system, adjacent structural members (such as longitudinal bulkheads) and internal structure of lower and upper stools, where fitted.

(4) Transverse bulkhead complete in ballast tanks, including girder system and adjacent structure members, such as longitudinal bulkheads, girder in double bottom tanks, inner bottom plating, hopper, connecting brackets.

(5) Transverse bulkhead lower part in cargo tank, including girder system, adjacent structural members (such as longitudinal bulkheads) and internal structure of lower stool, where fitted.

(6) The knuckle area and the upper part (3 meters approximately), including adjacent structural members.
Knuckle area is the area of the web frame around the connections of the slope hopper plating to the inner hull bulkhead and the inner bottom plating, up to 2 meters from the corners both on the bulkhead and the double bottom.

(7) Web frame in a cargo tank means deck transverse, longitudinal bulkhead vertical girder and cross ties, where fitted, including adjacent structural members.

Notes:

1. Ballast double hull tank: means double bottom tank plus double side tank plus double deck tank, as applicable, even if these tanks are separate.
2. Where no center cargo tanks are fitted (as in the case of center longitudinal bulkhead), transverse bulkheads in wing tanks are to be surveyed.

Table I 2-7
Minimum Requirements for Thickness Measurements at Hull Special Survey of Chemical Tankers

SS No. 1 (Age ≤ 5)	SS No. 2 (5 < Age ≤ 10)	SS No. 3 (10 < Age ≤ 15)	SS No. 4 and Subsequent (15 < Age)
1. Suspect Areas	1. Suspect Areas	1. Suspect Areas	1. Suspect Areas
2. 1 section of deck plating for the full beam of the ship within the cargo area (in way of a ballast tank, if any, or a cargo tank used primarily for water ballast)	2. Within the cargo area: a. Each deck plate b. 1 transverse section	2. Within the cargo area: a. Each deck plate b. 2 Transverse sections(1) c. All wind and water strakes	2. Within the cargo area: a. Each deck plate b. 3 transverse sections (1) c. Each bottom plate
	3. Selected wind and water strakes outside the cargo area	3. Selected wind and water strakes outside the cargo area	3. All wind and water strakes, full length
4. Measurements, for general assessment and recording of corrosion pattern, of those structural members subject to close-up survey according to Table I 2-6A or Table I 2-6B, as applicable.	4. Measurements, for general assessment and recording of corrosion pattern, of those structural members subject to close-up survey according to Table I 2-6A or Table I 2-6B, as applicable.	4. Measurements, for general assessment and recording of corrosion pattern, of those structural members subject to close-up survey according to Table I 2-6A or Table I 2-6B, as applicable.	4. Measurements, for general assessment and recording of corrosion pattern, of structural members subject to close-up survey according to Table I 2-6A or Table I 2-6B, as applicable.

Note:

(1) At least one section is to include a ballast tank within 0.5L amidships.

Table I 2-8 (1/2)
Requirements for Extent of Thickness Measurements at Those Areas of Substantial Corrosion at Hull Special Survey of Chemical Tankers within the Cargo Length Area

Structural member	Extent of measurement	Pattern of measurement
BOTTOM, INNER BOTTOM AND HOPPER STRUCTURE		
1. Bottom, inner bottom and hopper structure plating	Minimum of 3 bays across tank, including aft bay Measurements around and under all suction bell mouths	5 point pattern for each panel between longitudinals and floors
2. Bottom, inner bottom and hopper structure longitudinals	Minimum of 3 longitudinals in each bay where bottom plating measured	3 measurements in line across flange and 3 measurements on vertical web
3. Bottom girders, including the watertight ones	At fore and aft watertight floors and in center of tanks	Vertical line of single measurements on girder plating with 1 measurement between each panel stiffener, or a minimum of 3 measurements. 2 measurements across face flat where fitted.
4. Bottom floors, including the watertight ones	3 floors in bays where bottom plating measured, with measurements at both ends and middle	5 point pattern over 2 m^2 area
5. Hopper structure web frame ring	3 floors in bays where bottom plating measured	5 point pattern over 1 m^2 of plating. Single measurements on flange.
6. Hopper structure transverse watertight bulkhead or swash bulkhead	- lower 1/3 of bulkhead	- 5 point pattern over 1 m^2 of plating
	- upper 2/3 of bulkhead	- 5 point pattern over 2 m^2 of plating
	- stiffeners (minimum of 3)	- For web, 5-point pattern over span (2 measurements across web at each end and 1 at centre of span). - For flange, single measurements at each end and centre of span.
7. Panel stiffening	Where applicable	Single measurements
DECK STRUCTURE		
1. Deck plating	2 transverse bands across tank	Minimum of 3 measurements per plate per band
2. Deck longitudinals	Every third longitudinal in each of two bands with a minimum of one longitudinal	3 measurements in line vertically on webs, and 2 measurements on flange (if fitted)
3. Deck girders and brackets	At fore and aft transverse bulkhead, bracket toes and in centre of tanks	Vertical line of single measurements on web plating with 1 measurement between each panel stiffener, or a minimum of 3 measurements. 2 measurements across face flat. 5 point pattern on girder/ bulkhead brackets
4. Deck transverse webs	Minimum of 2 webs with measurements at both ends and middle of span	5 points pattern over 1 m^2 areas. Single measurements on face flat
5. Vertical web and transverse bulkhead in wing ballast tank for double hull design (2 metres from deck)	Minimum of 2 webs, and both transverse bulkheads	5-point pattern over 1 m^2 area
6. Panel stiffening	Where applicable	Single measurements

Table I 2-8 (2/2)
Requirements for Extent of Thickness Measurements at Those Areas of Substantial Corrosion at Hull Special Survey of Chemical Tankers within the Cargo Length Area

Structural member	Extent of measurement	Pattern of measurement
SIDE SHELL AND LONGITUDINAL BULKHEADS		
1. Side shell and longitudinal bulkhead plating: - Deckhead and bottom strakes, and strakes in way of horizontal girders - All other strakes	- Plating between each pair of longitudinals in a minimum of 3 bays (along the tank) - Plating between every third pair of longitudinals in same 3 bays	1 measurement
2. Side shell and longitudinal bulkhead longitudinals on: - Deckhead and bottom strakes - All other strakes	- Each longitudinal in same 3 bays - Every third longitudinal in same 3 bays	3 measurements across web and 1 measurement on flange
3. Longitudinals - brackets	Minimum of 3 at top, middle and bottom of tank in same 3 bays	5 point pattern over area of bracket
4. Vertical web and transverse bulkheads of double side tanks (excluding deck area): - Strakes in way of horizontal girders - Other strakes	- Minimum of 2 webs and both transverse bulkheads - Minimum of 2 webs and both transverse bulkheads	- 5 point pattern over approx. 2 m^2 area - 2 measurements between each pair of vertical stiffeners
5. Web frames and cross ties for other tanks than double side tanks	3 webs with minimum of 3 locations on each web, including in way of cross tie connections and lower end bracket	5 point pattern over approximately 2 m^2 area of webs, plus single measurements on flanges of web frame and cross ties
6. Horizontal girders	Plating on each girder in a minimum of 3 bays	2 measurements between each pair of longitudinal girder stiffeners
7. Panel stiffening	Where applicable	Single measurements
TRANSVERSE WATERTIGHT AND SWASH BULKHEADS		
1. Upper and lower stool, where fitted	- Transverse band within 25mm of welded connection to inner bottom/deck plating - Transverse band within 25mm of welded connection to shelf plate	5 point pattern between stiffeners over 1 meter length
2. Deckhead and bottom strakes, and strakes in way of horizontal stringers	Plating between pair of stiffeners at 3 locations: approximately 1/4, 1/2 and 3/4 width of tank	5 point pattern between stiffeners over 1 metre length
3. All other strakes	Plating between pair of stiffeners at middle location	1 measurement
4. Strakes in corrugated bulkheads	Plating for each change of scantling at center of panel and at flange of fabricated connection	5 point pattern over about 1 m^2 of plating
5. Stiffeners	Minimum of 3 typical stiffeners	For web, 5 point pattern over span between bracket connections (2 measurements across web at each bracket connection, and 1 at center of span). For flange, single measurements at each bracket toe and at center of span
6. Bracket	Minimum of 3 at top, middle and bottom of tank	5 point pattern over areas of bracket
7. Horizontal stringers	All stringers with measurements at both ends and middle.	5 point pattern over 1 m^2 area, plus single measurements near bracket toes and on flanges
8. Deep webs and girders	Measurements at toe of bracket and at centre of span	For web, 5 point pattern over about 1 m^2 3 measurements across face flat

Table I 2-9
Minimum Requirements to Tank Testing at Hull Special Survey of Chemical Tankers

SS No. 1 Age ≤ 5	SS No. 2 and subsequent Age > 5
1. All ballast tank boundaries	1. All ballast tank boundaries
2. Cargo tank boundaries facing ballast tanks, void spaces, pipe tunnels, pump-rooms or cofferdams	2. All cargo tank bulkheads

Table I 2-10
Minimum Requirements for Close-up Survey at Hull Special Surveys of General Dry Cargo Ships

SS No. 1 (Age ≤ 5)	SS No. 2 (5 < Age ≤ 10)	SS No. 3, (10 < Age ≤ 15)	SS No. 4 and subsequent (15 < Age)
(A) Selected shell frames in 1 forward and 1 aft cargo hold and associated tween deck spaces	(A) Selected shell frames in all cargo holds and tween deck spaces	(A) All shell frames in the forward lower cargo hold and 25% frames in each of the remaining cargo holds and tween deck spaces including upper and lower end attachments and adjacent shell plating	(A) All shell frames in all cargo holds and tween deck spaces including upper and lower end attachments and adjacent shell plating Areas (B)~(F) as for Special Survey No. 3
(B) 1 selected cargo hold transverse bulkhead	(B) 1 transverse bulkhead in each cargo hold (B) Forward and aft transverse bulkhead in 1 side ballast tank, including stiffening system.	(B) All cargo hold transverse bulkheads (B) All transverse bulkheads in ballast tanks, including stiffening system	
	(C) 1 transverse web with associated plating and framing in 2 representative water ballast tanks of each type (i.e. topside, hopper side, side tank or double bottom tank)	(C) All transverse webs with associated plating and framing in each water ballast tank (i.e. topside, hopper side, side tank or double bottom tank)	
(D) All cargo hold hatch covers and coamings (plating and stiffeners)	(D) All cargo hold hatch covers and coamings (plating and stiffeners)	(D) All cargo hold hatch covers and coamings (plating and stiffeners)	
	(E) Selected areas of all deck plating inside line of hatch openings between cargo hold hatches	(E) All deck plating inside line of hatch openings between cargo hold hatches	
	(F) Selected areas of inner bottom plating	(F) All areas of inner bottom plating	

(A) ~ (F) are areas to be subjected to close-up surveys. (See IACS URZ7.1, Figure 1 and 2)

(A) Cargo hold transverse frames

(B) Cargo hold transverse bulkhead plating, stiffeners and girders

(C) Transverse web frame or watertight transverse bulkhead in water ballast tanks

(D) Cargo hold hatch covers and coamings

(E) Deck plating inside line of hatch openings between cargo hold hatches

(F) Inner bottom plating

Notes:

(1) Close-up survey of cargo hold transverse bulkheads to carried out at the following levels:

a. Immediately above the inner bottom and immediately above the tween decks, as applicable

b. Mid-height of the bulkheads for holds without tween decks

c. Immediately below the main deck plating and tween deck plating

Table I 2-11
Minimum Requirements for the Thickness Measurement at Hull Special Surveys of General Dry Cargo Ships

SS No. 1 (Age ≤ 5)	SS No. 2 (5 < Age ≤ 10)	SS No. 3 (10 < Age ≤ 15)	SS No. 4 and Subsequent (15 < Age)
1. Suspect Areas.	1. Suspect Areas. 2. 1 transverse section of deck plating in way of a cargo space within the amidships 0.5L. 3. Measurement for general assessment and recording of corrosion pattern of those structural members subject to close-up survey according to Table I 2-10.	1. Suspect Areas. 2. 2 transverse sections within the amidships 0.5L in way of 2 different cargo spaces. 3. Measurement for general assessment and recording of corrosion pattern of those structural members subject to close-up survey according to Table I 2-10. 4. Within the cargo length, each deck plate outside line of cargo hatch openings. 5. All wind and water strakes within the cargo length area. 6. Selected wind and water strakes outside the cargo length area.	1. Suspect Areas. 2. Within the cargo length: a. A minimum of 3 transverse sections within the amidships 0.5L. b. Each deck plate outside line of cargo hatch openings. c. Each bottom plate, including lower turn of bilge. d. Duct keel or pipe tunnel plating and internals. 3. Measurement for general assessment and recording of corrosion pattern of those structural members subject to close-up survey according to Table I 2-10. 4. All wind and water strakes full length

Notes:

(1) Thickness measurement locations are to be selected to provide the best representative sampling of areas likely to be most exposed to corrosion, considering cargo and ballast history and arrangement and condition of protective coatings.

(2) For ships less than 100 m in length, the number of transverse sections required at Special Survey No. 3 may be reduced to 1 and the number of transverse sections at Special Survey No. 4 and subsequent Special Surveys may be reduced to 2.

Table I 2-12
Minimum Requirements for Overall and Close-up Survey and Thickness Measurements at Hull Intermediate Survey of Double Hull Oil Tankers

Age of ship at time of Intermediate Survey due date		
5 <Age ≤ 10	10 < Age ≤ 15	15 < Age
Overall survey of representative water ballast tanks, selected by the attending Surveyor (See 2.14.2(b) of this Part)	The requirements of the previous Special Survey (See 2.14.2(c) of this Part)	The requirements of the previous Special Survey (See 2.14.2(d) of this Part)
Suspect areas identified at previous surveys are to be examined (See 2.14.2(b) of this Part)		

Table I 2-13
Minimum Requirements for Close-up Survey at Hull Special Survey of Double Hull Oil Tankers

SS No. 1 (Age ≤ 5)	SS No. 2 (5 < Age ≤ 10)	SS No. 3 (10 < Age ≤ 15)	SS No. 4 and Subsequent (15 < Age)
web frame (1), in a ballast tank[1]	All web frames (1), in a ballast tank[1] The knuckle area and the upper part (5 meters approximately) of 1 web frame in each remaining ballast tank (6)	All web frames (1), in all ballast tanks	As for Special Survey for age from 10 to 15 years Additional transverse areas as deemed necessary by the Society
1 deck transverse, in a cargo oil tank (2)	1 deck transverse (2), in 2 cargo oil tanks	All web frames (7), including deck transverse and cross ties, if fitted. in a cargo oil tank 1 web frame (7), including deck transverse and cross ties, if fitted, in each remaining cargo oil tank	
1 transverse bulkhead (4), in a ballast tank[1]	1 transverse bulkhead (4), in each ballast tank[1]	All transverse bulkheads in all cargo oil (3) tanks All transverse bulkheads in all ballast (4) tanks	
1 transverse bulkhead (5), in a cargo oil center tank 1 transverse bulkhead (5), in a cargo oil wing tank[2]	1 transverse bulkhead (5), in 2 cargo oil center tanks 1 transverse bulkhead (5), in a cargo oil wing tank[2]		

(1) ~ (7) are areas to be subjected to close-up surveys and thickness measurements (See IACS URZ10.4, Figure 9 and Figure 10)

(1) Web frame in a ballast tank means vertical web in side tank, hopper web in hopper tank, floor in double bottom tank and deck transverse in double deck tank (where fitted), including adjacent structural members. In fore and aft peak tanks web frame means a complete transverse web frame ring including adjacent structural members

(2) Deck transverse, including adjacent deck structural members (or external structure on deck in way of the tank, where applicable)

(3) Transverse bulkhead complete in cargo tanks, including girder system, adjacent structural members (such as longitudinal bulkheads) and internal structure of lower and upper stools, where fitted

(4) Transverse bulkhead complete in ballast tanks, including girder system and adjacent structural members, such as longitudinal bulkheads, girders in double bottom tanks, inner bottom plating, hopper side, connecting brackets

(5) Transverse bulkhead lower part in cargo tank, including girder system, adjacent structural members (such as longitudinal bulkheads) and internal structure of lower stool, where fitted

(6) The knuckle area and the upper part (5 meters approximately), including adjacent structural members. Knuckle area is the area of the web frame around the connections of the slope hopper plating to the inner hull bulkhead and the inner bottom plating, up to 2 meters from the corners both on the bulkhead and the double bottom

(7) Web frame in a cargo oil tank means deck transverse, longitudinal bulkhead structural elements and cross ties, where fitted, including adjacent structural members

Notes:

1. Ballast tank: Apart from the fore and aft peak tanks, the term "ballast tank" has the following meaning:
   (a) all ballast compartments (hopper tank, side tank and double-deck tank, if separate from double-bottom tank) located on one side, i.e. portside or starboard side, and additionally double-bottom tank on portside plus starboard side, when the longitudinal central girder is not watertight and, therefore, the double-bottom tank is a unique compartment from portside to starboard side; or
   (b) all ballast compartments (double-bottom tank, hopper tank, side tank and double-deck tank) located on one side, i.e. portside or starboard side, when the longitudinal central girder is watertight and, therefore, the portside double-bottom tank separate from the starboard-side double-bottom tan k."
2. Where no center cargo tanks are fitted (as in the case of center longitudinal bulkhead), transverse bulkheads in wing tanks are to be surveyed.

Table I 2-14
Minimum Requirements for Thickness Measurements at Hull Special Survey of Double Hull Oil Tankers

SS No. 1 (Age ≤ 5)	SS No. 2 (5 < Age ≤ 10)	SS No. 3 (10 < Age ≤ 15)	SS No. 4 and Subsequent (15 < Age)
1. Suspect Areas	1. Suspect Areas	1. Suspect Areas	1. Suspect Areas
2. 1 section of deck plating for the full beam of the ship within the cargo area	2. Within the cargo area: a. each deck plate b. 1 transverse section	2. Within the cargo area: a. each deck plate b. 2 transverse sections(1) c. all wind and water strakes	2. Within the cargo area: a. each deck plate b. 3 transverse sections(1) c. each bottom plate
	3. Selected wind and water strakes outside the cargo area	3. Selected wind and water strakes outside the cargo area	3. All wind and water strakes, full length
4. Measurements, for general assessment and recording of corrosion pattern, of those structural members subject to close-up survey according to Table I 2-13	4. Measurements, for general assessment and recording of corrosion pattern, of those structural members subject to close-up survey according to Table I 2-13	4. Measurements, for general assessment and recording of corrosion pattern, of those structural members subject to close-up survey according to Table I 2-13	4. Measurements, for general assessment and recording of corrosion pattern, of those structural members subject to close-up survey according to Table I 2-13

Note:
(1) At least 1 section is to include a ballast tank within 0.5L amidships.

Table I 2-15 (1/3)
Requirements for Extent of Thickness Measurements at Those Areas of Substantial Corrosion at Hull Special Survey of Double Hull Oil Tankers within the Cargo Length Area

Structural member	Extent of measurement	Pattern of measurement
Bottom, inner bottom and hopper structure		
Bottom, inner bottom and hopper structure plating	Minimum of 3 bays across double bottom tank, including aft bay Measurements around and under all suction bell mouths	5-point pattern for each panel between longitudinals and floors
Bottom, inner bottom and hopper structure longitudinals	Minimum of 3 longitudinals in each bay where bottom plating measured	3 measurements in line across flange and 3 measurements on vertical web
Bottom girders, including the watertight ones	At fore and aft watertight floors and in center of tanks	Vertical line of 1 measurements on girder plating with 1 measurement between each panel stiffener, or a minimum of 3 measurements
Bottom floors, including the watertight ones	3 floors in bays where bottom plating measured, with measurements at both ends and middle	5-point pattern over 2 m^2 area
Hopper structure web frame ring	3 floors in bays where bottom plating measured	5-point pattern over 1 m^2 of plating. 1 measurements on flange
Hopper structure transverse water-tight bulkhead or swash bulkhead	lower 1/3 of bulkhead	5-point pattern over 1 m^2 of plating
	upper 2/3 of bulkhead	5-point pattern over 2 m^2 of plating
	stiffeners (minimum of 3)	For web, 5-point pattern over span (2 measurements across web at each end and 1 at center of span). For flange, 1 measurements at each end and center of span
Panel stiffening	Where applicable	1 measurements
Deck structure		
Deck plating	2 transverse bands across tank	Minimum of 3 measurements per plate per band
Deck longitudinals	Every third longitudinal in each of 2 bands with a minimum of 1 longitudinal	3 measurements in line vertically on webs and 2 measurements on flange (if fitted)
Deck girders and brackets (usually in cargo tanks only)	At fore and aft transverse bulkhead, bracket toes and in center of tanks	Vertical line of 1 measurements on web plating with 1 measurement between each panel stiffener, or a minimum of 3 measurements 2 measurements across flange 5-point pattern on girder/ bulkhead brackets
Deck transverse webs	Minimum of 2 webs, with measurements at both ends and middle of span	5-point pattern over 1 m^2 area. 1 measurements on flange
Vertical web and transverse bulkhead in wing ballast tank (2 meters from deck)	Minimum of 2 webs, and both transverse bulkheads	5-point pattern over 1 m^2 area
Panel stiffening	Where applicable	1 measurements

Table I 2-15 (2/3)
Requirements for Extent of Thickness Measurements at Those Areas of Substantial Corrosion at Hull Special Survey of Double Hull Oil Tankers within the Cargo Length Area

Structural member	Extent of measurement	Pattern of measurement
Structure in wing ballast tanks		
Side shell and longitudinal bulkhead plating: - upper strake and strakes in way of horizontal girders - all other strakes	- Plating between each pair of longitudinals in a minimum of 3 bays (along the tank) - Plating between every third pair of longitudinals in same 3 bays	- 1 measurement - 1 measurement
Side shell and longitudinal bulkhead longitudinals on: - upper strake - all other strakes	- Each longitudinal in same 3 bays - Every third longitudinal in same 3 bays	- 3 measurements across web and 1 measurement on flange - 3 measurements across web and 1 measurement on flange
Longitudinals – brackets	Minimum of 3 at top, middle and bottom of tank in same 3 bays	5-point pattern over area of bracket
Vertical web and transverse bulkheads (excluding deckhead area): - strakes in way of horizontal girders - other strakes	- Minimum of 2 webs and both transverse bulkheads - Minimum of 2 webs and both transverse bulkheads	- 5-point pattern over approx. 2 m^2 area - 2 measurements between each pair of vertical stiffeners
Horizontal girders	Plating on each girder in a minimum of 3 bays	2 measurements between each pair of longitudinal girder stiffeners
Panel stiffening	Where applicable	1 measurements
Longitudinal bulkheads in cargo tanks		
Deckhead and bottom strakes, and strakes in way of the horizontal stringers of transverse bulkheads	Plating between each pair of longitudinals in a minimum of 3 bays	1 measurement
All other strakes	Plating between every third pair of longitudinals in same 3 bays	1 measurement
Longitudinals on deckhead and bottom strakes	Each longitudinal in same 3 bays	3 measurements across web and 1 measurement on flange
All other longitudinals	Every third longitudinal in same 3 bays	3 measurements across web and 1 measurement on flange
Longitudinals – brackets	Minimum of 3 at top, middle and bottom of tank in same 3 bays	5-point pattern over area of bracket
Web frames and cross ties	3 webs with minimum of 3 locations on each web, including in way of cross tie connections	5-point pattern over approximately 2 m^2 area of webs, plus 1 measurements on flanges of web frame and cross ties
Lower end brackets (opposite side of web frame)	Minimum of 3 brackets	5-point pattern over approximately 2 m^2 area of brackets, plus 1 measurements on bracket flanges

Table I 2-15 (3/3)
Requirements for Extent of Thickness Measurements at Those Areas of Substantial Corrosion at Hull Special Survey of Double Hull Oil Tankers within the Cargo Length Area

Structural member	Extent of measurement	Pattern of measurement
Transverse watertight and swash bulkheads in cargo tanks		
Upper and lower stool, where fitted	- Transverse band within 25 mm of welded connection to inner bottom/deck plating - Transverse band within 25 mm of welded connection to shelf plate	5-point pattern between stiffeners over 1 meter length
Deckhead and bottom strakes, and strakes in way of horizontal stringers	Plating between pair of stiffeners at 3 locations: approximately 1/4, 1/2 and 3/4 width of tank	5-point pattern between stiffeners over 1 meter length
All other strakes	Plating between pair of stiffeners at middle location	1 measurement
Strakes in corrugated bulkheads	Plating for each change of scantling at center of panel and at flange of fabricated connection	5-point pattern over about 1 m^2 of plating
Stiffeners	Minimum of 3 typical stiffeners	For web, 5-point pattern over span between bracket connections (two measurements across web at each bracket connection and one at center of span). For flange, 1 measurements at each bracket toe and at center of span
Brackets	Minimum of 3 at top, middle and bottom of tank	5-point pattern over area of bracket
Horizontal stringers	All stringers with measurements at both ends and middle	5-point pattern over 1 m^2 area, plus 1 measurements near bracket toes and on flanges

Table I 2-16
Minimum Requirements for Tank Testing at Hull Special Survey of Double Hull Oil Tankers

SS No. 1 Age ≤ 5	SS No. 2 and Subsequent 5 < Age
All ballast tank boundaries	All ballast tank boundaries
Cargo tank boundaries facing ballast tanks, void spaces, pipe tunnels, pump rooms or cofferdams	All cargo bulkheads

Table I 2-17
Overall Survey of Fuel Oil Tanks in the Cargo Length Area for Double Skin Bulk Carriers at Special Survey

SS No. 1 (Age ≤ 5)	SS No. 2 (5 < Age ≤ 10)	SS No. 3 (10 < Age ≤ 15)	SS No. 4 and Subsequent (15 < Age)
0	1	2	Half, minimum 2

Notes:

(1) These requirements apply to tanks of integral (structural) type.

(2) If a selection of tanks is accepted to be examined, then different tanks are to be examined at each Special Survey, on a rotational basis.

(3) Peak tanks (all uses) are subject to internal examination at each Special Survey.

(4) At Special Survey No. 3 and subsequent Special Surveys, 1 deep tank for fuel oil in the cargo area is to be included, if fitted.

Table I 2-18
Minimum Requirements for Close-Up Survey at Hull Special Survey of Double Skin Bulk Carriers, Excluding Ore Carriers

SS No. 1 (Age ≤ 5)	SS No. 2 (5 < Age ≤ 10)	SS No. 3 (10 < Age ≤ 15)	SS No. 4 and Subsequent (15 < Age)
(A) 1 transverse web with associated plating and longitudinals in 2 representative water ballast tanks of each type. (This is to include the foremost topside and double side water ballast tanks on either side)	(A) 1 transverse web with associated plating and longitudinals as applicable in each water ballast tank. (A) Forward and aft transverse bulkheads including stiffening system in a transverse section including topside, hopper side and double side ballast tanks on one side of the ship (i.e. port or starboard). (B) 25% of ordinary transverse frames for transverse framing system or 25% of longitudinals for longitudinal framing system on side shell and inner side plating at forward, middle and aft parts, in the foremost double side tanks.	(A) All transverse webs with associated plating and longitudinals as applicable in each water ballast tank. (A) All transverse bulkheads including stiffening system in each water ballast tank. (B) 25% of ordinary transverse frames for transverse framing systems or 25% of longitudinals for longitudinal framing systems on side shell and inner side plating at forward, middle and aft parts in all double side tanks.	(A) All transverse webs with associated plating and longitudinals as applicable in each water ballast tank. (A) All transverse bulkheads including stiffening system in each water ballast tank. (B) All ordinary transverse frames for transverse framing systems or all longitudinals for longitudinal framing systems on side shell and inner side plating at forward, middle and aft parts in all double side tanks.
(C) 2 selected cargo hold transverse bulkheads, including internal structure of upper and lower stools, where fitted.	(C) 1 transverse bulkhead in each cargo hold, including internal structure of upper and lower stools, where fitted.	(C) All cargo hold transverse bulkheads, including internal structure of upper and lower stools, where fitted.	Areas (C) ~ (E) as Special Survey No.3 (10 < Age ≤ 15).
(D) All cargo hold hatch covers and coamings (platings and stiffeners).	(D) All cargo hold hatch covers and coamings (platings and stiffeners).	(D) All cargo hold hatch covers and coamings (platings and stiffeners).	
	(E) All deck plating and under deck structure, inside line of hatch openings between all cargo hold hatches.	(E) All deck plating and under deck structure inside line of hatch openings between all cargo hold hatches	

(A) ~ (E) are areas to be subjected to Close-up Surveys and thickness measurements (See IACS URZ10.5, Figure 10 and 11).

(A) Transverse web frame or watertight transverse bulkhead in topside, hopper side and double side ballast tanks. In fore and aft peak tanks transverse web frame means a complete transverse web frame ring including adjacent structural members.

(B) Ordinary transverse frame or longitudinal frame in double side tanks.

(C) Cargo hold transverse bulkheads plating, stiffeners and girders.

(D) Cargo hold hatch covers and coamings. For cargo hold hatch covers of approved design which structurally have no access to the internals, close-up survey/ thickness measurement shall be done of accessible parts of hatch covers' structures.

(E) Deck plating and under deck structure inside line of hatch openings between cargo hold hatches.

Note: Close-up survey of transverse bulkheads to be carried out at 4 levels:
Level (a): Immediately above the inner bottom and immediately above the line of gussets (if fitted) and shedders for ships without lower stool.
Level (b): Immediately above and below the lower stool shelf plate (for those ships fitted with lower stools), and immediately above the line of the shedder plates.
Level (c): Above mid-height of the bulkhead.
Level (d): Immediately below the upper deck plating and immediately adjacent to the upper wing tank, and immediately below the upper stool shelf plate for those ships fitted with upper stools, or immediately below the topside tanks.

Table I 2-19
Minimum Requirements for Close-Up Survey at Hull Special Survey of Ore Carriers

SS No. 1 (Age ≤ 5)	SS No. 2 (5 < Age ≤ 10)	SS No. 3 (10 < Age ≤ 15)	SS No. 4 and Subsequent (15 < Age)
(A) 1 web frame ring complete including adjacent structural members in a ballast wing tank. (A) 1 transverse bulkhead lower part including girder system and adjacent structural members in a ballast tank	(A) All web frame rings complete including adjacent structural members in a ballast wing tank. (A) 1 deck transverse including adjacent deck structural members in each remaining ballast tank. (A) Forward and aft transverse bulkheads complete including girder system and adjacent structural members in a ballast wing tank (A) 1 transverse bulkhead lower part including girder system and adjacent structural members in each remaining ballast tank.	(A) All web frame rings complete including adjacent structural members in each ballast tank. (A) All transverse bulkheads complete including girder system and adjacent structural members in each ballast tank. (A) 1 web frame ring complete including adjacent structural members in each wing void space. (A) Additional web frame rings in void spaces as deemed necessary by the Society.	As for Special Survey for age from 10 to 15 years.
(C) 2 selected cargo hold transverse bulkheads, including internal structure of upper and lower stools, where fitted.	(C) 1 transverse bulkhead in each cargo hold, including internal structure of upper and lower stools, where fitted.	(C) All cargo hold transverse bulkheads, including internal structure of upper and lower stools, where fitted.	Areas (C) ~ (E) as for age interval 10 to 15 years.
(D) All cargo hold hatch covers and coamings (platings and stiffeners).	(D) All cargo hold hatch covers and coamings (platings and stiffeners).	(D) All cargo hold hatch covers and coamings (platings and stiffeners).	
	(E) All deck plating and under deck structure inside line of hatch openings between all cargo hold hatches.	(E) All deck plating and under deck structure inside line of hatch openings between all cargo hold hatches.	

(A), (C) ~ (E) are areas to be subjected to close-up surveys and thickness measurements (see Fig. I 2-4 and I 2-5).

(A) Transverse web frame or watertight transverse bulkhead in ballast wing tanks and void spaces. In fore and aft peak tanks transverse web frame means a complete transverse web frame ring including adjacent structural members.

(C) Cargo hold transverse bulkheads plating, stiffeners and girders.

(D) Cargo hold hatch covers and coamings. For cargo hold hatch covers of approved design which structurally have no access to the internals, close-up survey/ thickness measurement shall be done of accessible parts of hatch covers' structures.

(E) Deck plating and under deck structure inside line of hatch openings between cargo hold hatches.

Note: Close-up survey of transverse bulkheads to be carried out at 4 levels:

Level (a): Immediately above the inner bottom and immediately above the line of gussets (if fitted) and shedders for ships without lower stool.

Level (b): Immediately above and below the lower stool shelf plate (for those ships fitted with lower stools), and immediately above the line of the shedder plates.

Level (c): About mid-height of the bulkhead.

Level (d): Immediately below the upper deck plating and immediately adjacent to the upper wing tank, and immediately below the upper stool shelf plate for those ships fitted with upper stools, or immediately below the topside tanks.

Table I 2-20
Minimum Requirements for Thickness Measurements at Hull Special Survey of Double Skin Bulk Carriers

SS No. 1 (Age ≤ 5)	SS No. 2 (5 < Age ≤ 10)	SS No. 3 (10 < Age ≤ 15)	SS No. 4 and Subsequent (15 < Age)
Suspect areas	Suspect areas	Suspect areas	Suspect areas
	Within the cargo length: - 2 transverse sections of deck plating outside line of cargo hatch openings	Within the cargo length: - each deck plate outside line of cargo hatch openings - 2 transverse sections, 1 in the amidship area, outside line of cargo hatch openings - all wind and water strakes	Within the cargo length: - each deck plate outside line of cargo hatch openings - 3 transverse sections, 1 in the amidship area, outside line of cargo hatch openings - each bottom plate
	Wind and water strakes in way of the 2 transverse sections considered above. Selected wind and water strakes outside the cargo length area.	Selected wind and water strakes outside the cargo length area.	All wind and water strakes, full length.
	Measurements, for general assessment and recording of corrosion pattern, of those structural members subject to close-up survey according to Table I 2-18 or Table I 2-19, as applicable.	Measurements, for general assessment and recording of corrosion pattern, of those structural members subject to close-up survey according to Table I 2-18 or Table I 2-19, as applicable.	Measurements, for general assessment and recording of corrosion pattern, of those structural members subject to close-up survey according to Table I 2-18 or Table I 2-19, as applicable.

Table I 2-21
Minimum Requirements of Overall and Close-Up Survey and Thickness Measurements at Hull Intermediate Survey of Double Skin Bulk Carriers

Age of ship at time of Intermediate Survey due date		
5 < Age ≤ 10	10 < Age ≤ 15	15 < Age
Overall survey of Representative ballast tanks selected by the attending Surveyor. (the selection is to include fore and aft peak tanks and a number of other tanks, taking into account the total number and type of ballast tanks)	The requirements of the previous Special Survey. (see 2.15.2(c) of this Part)	The requirements of the previous Special Survey. (see 2.15.2(d) of this Part)
Overall and close-up survey of Suspect Areas identified at previous surveys.		
Overall survey of all cargo holds.		
Thickness measurements to an extent sufficient to determine both general and local corrosion levels at areas subject to close-up survey at 'suspect areas' identified at previous surveys.		

Table I 2-22 (1/3)
Requirements for Extent of Thickness Measurements at Those Areas of Substantial Corrosion of Double Skin Bulk Carriers Within The Cargo Length Area

BOTTOM, INNER BOTTOM AND HOPPER STRUCTURE		
Structural member	Extent of measurement	Pattern of measurement
Bottom, inner bottom and hopper structure plating	Minimum of 3 bays across double bottom tank, including aft bay Measurements around and under all suction bell mouths	5-point pattern for each panel between longitudinals and floors
Bottom, inner bottom and hopper structure longitudinals	Minimum of 3 longitudinals in each bay where bottom plating measured	3 measurements in line across the flange and 3 measurements on the vertical web
Bottom girders, including the watertight ones	At fore and aft watertight floors and in center of tanks	Vertical line of 1 measurements on girder plating with 1 measurement between each panel stiffener, or a minimum of 3 measurements
Bottom floors, including the watertight ones	3 floors in the bays where bottom plating measured, with measurements at both ends and middle	5-point pattern over 2 m^2 area
Hopper structure web frame ring	3 floors in bays where bottom plating measured	5-point pattern over 1 m^2 of plating. 1 measurements on flange.
Hopper structure transverse watertight bulkhead or swash bulkhead	- lower 1/3 of bulkhead	- 5-point pattern over 1 m^2 of plating
	- upper 2/3 of bulkhead	- 5-point pattern over 2 m^2 of plating
	- stiffeners (minimum of 3)	- For web, 5-point pattern over span (2 measurements across web at each end and 1 at center of span). For flange, 1 measurements at each end and center of span
Panel stiffening	Where applicable	1 measurements

Table I 2-22 (2/3)
Requirements for Extent of Thickness Measurements at Those Areas of Substantial Corrosion of Double Skin Bulk Carriers Within The Cargo Length Area

DECK STRUCTURE INCLUDING CROSS STRIPS, MAIN CARGO HATCHWAYS, HATCH COVERS, COAMINGS AND TOPSIDE TANKS		
Structural member	Extent of measurement	Pattern of measurement
Cross Deck Strip plating	Suspect Cross Deck Strip plating	5-point pattern between underdeck stiffeners over 1 m length
Underdeck Stiffeners	Transverse members Longitudinal member	5-point pattern at each end and mid span 5-point pattern on both web and flange
Hatch Covers	Side and end skirts, each 3 locations 3 longitudinal bands, outboard strakes (2) and centerline strake (1)	5-point pattern at each location 5-point measurement each band
Hatch Coamings	Each side and end of coaming, one band lower 1/3, one band upper 2/3 of coaming	5-point measurement each band i.e. end or side coaming
Topside Ballast Tanks	a) watertight transverse bulkheads: - Lower 1/3 of bulkhead - Upper 2/3 of bulkhead - Stiffeners	 5-point pattern over 1 m^2 of plating 5-point pattern over 1 m^2 of plating 5-point pattern over 1 m length
Topside Ballast Tanks	b) 2 representative swash transverse bulkheads: - Lower 1/3 of bulkhead - Upper 2/3 of bulkhead - Stiffeners	 5-point pattern over 1 m^2 of plating 5-point pattern over 1 m^2 of plating 5-point pattern over 1 m length
Topside Ballast Tanks	c) 3 representative bays of slope plating - Lower 1/3 of tank - Upper 2/3 of tank	 5-point pattern over 1 m^2 of plating 5-point pattern over 1 m^2 of plating
Topside Ballast Tanks	d) Longitudinals, suspect and adjacent	5-point pattern on both web and flange over 1 m length
Main Deck Plating	Suspect plates and adjacent (4)	5-point pattern over 1 m^2 of plating
Main Deck Longitudinals	Suspect Plates	5-point pattern on both web and flange over 1 m length
Web Frames/Transverses	Suspect Plates	5-point pattern over 1 m^2

Table I 2-22 (3/3)
Requirements for Extent of Thickness Measurements at Those Areas of Substantial Corrosion of Double Skin Bulk Carriers Within The Cargo Length Area

STRUCTURE IN DOUBLE SIDE SPACES OF DOUBLE SKIN BULK CARRIERS INCLUDING WING VOID SPACES OF ORE CARRIERS		
Structural member	Extent of measurement	Pattern of measurement
Side shell and inner plating: - Upper strake and strakes in way of horizontal girders - All other strakes	 - Plating between each pair of transverse frames / longitudinals in a minimum of 3 bays (along the tank) - Plating between every third pair of longitudinals in same 3 bays	 - 1 measurement - 1 measurement
Side shell and inner side transverse frames / longitudinals on: - upper strake - all other strakes	 - Each transverse frame / longitudinal in same 3 bays - Every third transverse frame / longitudinal in same 3 bays	 - 3 measurements across web and 1measurement on flange - 3 measurements across web and 1 measurement on flange
Transverse frames / Longitudinals - brackets	- Minimum of 3 at top, middle and bottom of tank in same 3 bays	5-point pattern over area of bracket
Vertical web and transverse bulkheads: - strakes in way of horizontal girders - other strakes	 - Minimum of 2 webs and both transverse bulkheads - Minimum of 2 webs and both transverse bulkheads	 - 5-point pattern over approx. 2 m^2 area - 2 measurements between each pair of vertical stiffeners
Horizontal girders	Plating on each girder in a minimum of 3 bays	2 measurements between each pair of longitudinal girder stiffeners
Plate stiffening	Where applicable	1 measurements
TRANSVERSE BULKHEADS IN CARGO HOLDS		
Structural member	Extent of measurement	Pattern of measurement
Lower stool, where fitted	- Transverse band within 25 mm of welded connection to inner bottom - Transverse bands within 25 mm of welded connection to shelf plate	- 5-point pattern between stiffeners over 1 m length - 5-point pattern between stiffeners over 1 m length
Transverse bulkheads	- Transverse band at approximately mid height - Transverse band at part of bulkhead adjacent to upper deck or below upper stool shelf plate (for those ships fitted with upper stools)	- 5-point pattern over 1 m^2 of plating - 5-point pattern over 1 m^2 of plating

Table I 2-23
Survey Requirements for Automatic Air Pipe Heads at Special Surveys

SS No. 1 (Age ≤ 5)	SS No. 2 (5 < Age ≤ 10)	SS No. 3 and Subsequent (10 < Age)
- 2 air pipe heads, 1 port and 1 starboard, located on the exposed decks in the forward 0.25L, preferably air pipes serving ballast tanks. - 2 air pipe heads, 1 port and 1 starboard, on exposed decks, serving spaces aft of 0.25L, preferably air pipes serving ballast tanks. (1), (2)	- All air pipe heads located on the exposed decks in the forward 0.25L. - At least 20% of air pipe heads on the exposed decks serving spaces aft of 0.25L, preferably air pipes serving ballast tanks. (1), (2)	- All air pipe heads located on the exposed decks. (3)

Notes:

(1) The selection of air pipe heads to be examined is left to the attending Surveyor.

(2) According to the results of this examination, the Surveyor may require the examination of other heads located on the exposed decks.

(3) Exemption may be considered for air pipe heads where there is substantial evidence of replacement after the last Special Survey.

Table I 2-24
Minimum Requirements for Close-up Survey at Hull Intermediate Surveys of Liquefied Gas Carrier

10 < Age ≤ 15	15 < Age
Close-up survey of: 1. all web frames and both transverse bulkheads in a representative ballast tank (1) and (2) 2. the upper part of 1 web frame in another representative ballast tank 3. 1 transverse bulkhead in another representative ballast tank (2)	Close-up survey of: 1. all web frames and both transverse bulkheads in 2 representative ballast tanks (1) and (2)

(1) Complete transverse web frame including adjacent structural members

(2) Transverse bulkhead complete, including girder system and adjacent members, and adjacent longitudinal bulkhead structure

Note:

1. Ballast tanks include topside, double hull side, double bottom, hopper side, or any combined arrangement of the aforementioned, and peak tanks where fitted.
2. For areas in tanks where protective coating is found to be in GOOD condition, the extent of close-up survey may be specially considered by the Society.
3. For ships having independent tanks of type C, with amidship section similar to that of a general cargo ship, the extent of close-up surveys may be specially considered by the Society.
4. The extent of close-up surveys may be extended by the surveyor as deemed necessary, taking into account the maintenance of the tanks under survey, the condition of the corrosion prevention system and also in the following cases:
   - in particular, in tanks having structural arrangements or details which have suffered defects in similar tanks, or on similar ships according to available information;
   - in tanks having structures approved with reduced scantlings.

Table I 2-25
Minimum Requirements for Close-up Survey
at Hull Special Surveys of Liquefied Gas Carriers

SS No. 1 (Age ≤ 5)	SS No. 2 (5 < Age ≤ 10)	SS No. 3 and Subsequent (10 < Age)
1. 1 web frame in a representative ballast tank of topside, hopper side and double hull side type. (1)	1. All web frames in a ballast tank, which is to be a double hull side tank or a topside tank. If such tanks are not fitted, another ballast tank is to be selected. (1) 1 web frame in each remaining ballast tank. (1)	1. All web frames in all ballast tanks (1)
2. 1 transverse bulkhead in a ballast tank. (3)	2. 1 transverse bulkhead in each ballast tank. (2)	2. All transverse bulkheads in all ballast tanks(2)

(1) Complete transverse web frame, including adjacent structural members

(2) Transverse bulkhead complete, including girder system and adjacent members, and adjacent longitudinal bulkhead structure

(3) Transverse bulkhead lower part, including girder system and adjacent structural members.

Notes:

1. Ballast tanks include topside, double hull side, double bottom, hopper side, or any combined arrangement of the aforementioned, and peak tanks where fitted.
2. For areas in tanks where protective coating is found to be in GOOD condition, the extent of close-up survey may be specially considered.
3. For ships having independent tanks of type C, with amidship section similar to that of a general cargo ship, the extent of close-up surveys may be specially considered.
4. The Surveyor may extend the close-up surveys as deemed necessary, taking into account the maintenance of the tanks under survey, the condition of the corrosion prevention system and also in the following cases:
   - in particular, in tanks having structural arrangements or details which have suffered defects in similar tanks, or on similar ships according to available information;
   - in tanks having structures approved with reduced scantlings.

Table I 2-26
Minimum Requirements for the Thickness Measurement at Hull Special Survey of Liquefied Gas Carriers

SS No. 1 (Age ≤ 5)	SS No. 2 (5 < Age ≤ 10)	SS No. 3 (10 < Age ≤ 15)	SS No. 4 and Subsequent (15 < Age)
1. 1 section of deck plating for the full beam of the ship within 0.5 L amidships in way of a ballast tank, if any	1. Within the cargo area : - each deck plate - 1 transverse section within 0.5 L amidships in way of a ballast tank, if any	1. Within the cargo area: - each deck plate - 2 transverse sections (1) - all wind and water strakes	1. Within the cargo area: - each deck plate - 3 transverse sections (1) - each bottom plate - duct keel plating and internals
	2. Selected wind and water strakes outside the cargo area	2. Selected wind and water strakes outside the cargo area	2. All wind and water strakes, full length
3. Measurements, for general assessment and recording of corrosion pattern, of those structural members subject to close-up survey according to Table I 2-25	3 Measurements, for general assessment and recording of corrosion pattern, of those structural members subject to close-up survey according to Table I 2-25	3. Measurements, for general assessment and recording of corrosion pattern, of those structural members subject to close-up survey according to Table I 2-25	3. Measurements, for general assessment and recording of corrosion pattern, of those structural members subject to close-up survey according to Table I 2-25
4. Suspect areas	4. Suspect areas	4. Suspect areas	4. Suspect areas

(1) At least 1 section is to include a ballast tank within 0.5L amidships, if any.

Note:

1. For ships having independent tanks of type C, with a midship section similar to that of a general cargo ship, the extent of thickness measurements may be increased to include the tank top plating at the discretion of the Surveyor.
2. For areas in spaces where coatings are found to be in GOOD condition, the extent of thickness measurements may be specially considered.
3. The Surveyor may extend the thickness measurements as deemed necessary. Where substantial corrosion is found, the extent of thickness measurements is to be increased to the satisfaction of the Surveyor.

Table I 2-27
Minimum Requirements for Thickness Measurements for Surface-Type Units at Special Survey(1)~(4)

SS No. 1 (Age ≤ 5)	SS No. 2 (5 < Age ≤ 10)	SS No. 3 (10 < Age ≤ 15)	SS No. 4 and Subsequent (15 < Age)
(A) Suspect areas throughout the unit.	(A) Suspect areas throughout the unit.	(A) Suspect areas throughout the unit.	(A) Suspect areas throughout the unit
	(B) 1 transverse section of deck plating abreast the moon pool opening within the amidships 0.6L, together with internals in way as deemed necessary. Where unit is configured with side ballast tanks, the plating and internals of the tanks are also to be gauged in way of the section chosen.	(B) 2 Transverse Sections (Girth Belts) of deck, bottom and side plating abreast the moon pool and 1 hatch opening within the amidships 0.6L together with internals in way as deemed necessary. Where unit is configured with side ballast tanks, the plating and internals of the tanks to be gauged in way of the required belts, Remaining internals in ballast tanks to be gauged as deemed necessary.	(B) A minimum of 3 Transverse Sections (Girth Belts) of deck, bottom, side, and longitudinal-bulkhead plating in way of the moon pool and other areas within the amidships 0.6L, together with internals in way (including in perimeter ballast tanks, where fitted in way of belts).
	(C) Moon pool boundary bulkhead plating.	(C) Moon pool boundary bulkhead plating.	(C) Moon pool boundary bulkhead plating.
		(D) Internals in forepeak tank and aft peak tank as deemed necessary.	(D) Internals in forepeak and after peak tanks as deemed necessary.
			(E) Lowest strake of all transverse bulkheads in hold spaces. Remaining bulkhead plating to be gauged as deemed necessary.
			(F) All plates in 2 wind and water strakes, port and starboard, full length.
			(G) All exposed main deck plating full length and all exposed first-tier super-structure deck plating (poop, bridge and forecastle decks).
			(H) All keel plates full length plus additional bottom plating as deemed necessary by the Surveyor, particularly in way of cofferdams and machinery spaces.
			(I) Duct keel or pipe tunnel plating or pipe tunnel plating and internals as deemed necessary.
			(J) Plating of sea chests. Shell plating in way of overboard discharges as considered necessary by the attending surveyor.

Note:

(1) Thickness measurement locations are to be selected to provide the best representative sampling of areas likely to be most exposed to corrosion, considering ballast history and arrangement and condition of protective coatings.

(2) Thickness measurements of internals may be specially considered by the Surveyor if the hard protective coating is in GOOD condition.

(3) For units less than 100 meters in length, the number of transverse sections required at Special Survey No. 3 may be reduced to 1, and the number of transverse sections required at subsequent Special Surveys may be reduced to 2.

(4) For units more than 100 meters in length, at Special Survey No. 3, thickness measurements of exposed deck plating within amidship 0.5L may be required.

Table I 2-28
Minimum Requirements for Thickness Measurements for Self-Elevating Units at Special Survey(1)

SS No. 1 (Age ≤ 5)	SS No. 2 (5 < Age ≤ 10)	SS No. 3 (10 < Age ≤ 15)	SS No. 4 and Subsequent (15 < Age)
(A) Suspect areas throughout the unit (particular attention to be paid to the legs in way of the Splash Zone).	(A) Suspect areas throughout the unit.	(A) Suspect areas throughout the unit.	(A) Suspect areas throughout the unit.
	(B) Legs in way of Splash Zone.	(B) Legs in way of Splash Zone.	(B) Legs in way of Splash Zone.
	(C) Primary application structures where wastage is evident.	(C) Representative gaugings, throughout, of special and primary application structures.	(C) Comprehensive gaugings, throughout, of special and primary application structures.
	(D) Representative gaugings of upper hull deck and bottom plating and internals of one preload (ballast) tank.	(D) Leg well structure.	(D) Leg well structure.
		(E) Representative gaugings of deck, bottom, and side shell plating of hull and mat.	(E) Representative gaugings of deck, bottom, and side shell plating of hull and mat.
		(F) Representative gaugings of upper hull deck and bottom plating and internals of at least 2 preload (ballast) tanks.	(F) Substructure of derrick as deemed necessary.
			(G) Representative gaugings of internals of all preload (ballast) tanks.

Note:

(1) Structural application designation (Special, Primary, Secondary) are defined in IACS Recommendation No. 11

Table I 2-29
Minimum Requirements for Thickness Measurements for Column-Stabilized Units at Special Survey(1)

SS No. 1 (Age ≤ 5)	SS No. 2 (5 < Age ≤ 10)	SS No. 3 (10 < Age ≤ 15)	SS No. 4 and Subsequent (15 < Age)
(A) Suspect areas throughout the unit.	(A) Suspect areas throughout the unit.	(A) Suspect areas throughout the unit.	(A) Suspect areas throughout the unit.
(B) Columns and bracings where wastage is evident in Splash Zone.	(B) Representative gaugings of columns and bracings in Splash Zone together with internals in way as deemed necessary.	(B) Representative gaugings, throughout, of special and primary application structures.	(B) Comprehensive gaugings, throughout, of special and primary application structures.
	(C) Special and primary application structure where wastage is evident.	(C) 1 Transverse Section (Girth Belt) of each of 2 columns and 2 bracings in Splash Zone together with internals in way as deemed necessary.	(C) 1 Transverse Section (Girth Belt) of each of one-half of the columns and bracings in Splash Zone and internals in way as deemed necessary (i.e., gauge half of the unit's columns and bracings in Splash Zone).
		(D) Lower hulls in way of mooring lines where wastage is evident.	(D) Lower hulls in way of mooring lines where wastage is evident.
		(E) 1 Transverse Section (Girth Belt) of each lower hull between one set of columns.	(E) 1 Transverse Section (Girth Belt) of each lower hull between 1 set of columns.
			(F) Representative gaugings of substructure of drilling derrick.

Note:
(1) Structural application designation (Special, Primary, Secondary) are defined in IACS Recommendation No. 11

Chapter 3

Survey Requirements for Additional Systems and Services

3.1 General

In order to maintain a Class Notation for an additional system or service, that system, equipment, or installation is to be surveyed in accordance with this chapter.

3.2 Surveys of Refrigerated Cargo Installations

3.2.1 Annual Surveys

(a) Where practicable, the entire refrigerating machinery is to be examined under working condition on the ship's arrival at the port of discharge before the refrigerated cargo is unloaded. Log books or other records are to be examined and any breakdown or malfunctions of the refrigerating plant in the past are to be noted and reported to the Surveyor.

(b) Cargo chambers are to be examined throughout to check that insulation linings, fastenings as well as sheathings on decks, tank tops and tunnel tops are free from damages, and airtight. Where the insulation deficiency is known or suspected, the removal or boring of the insulation may be required by the Surveyor in order to determine fullness and dryness; test holes are to be properly closed thereafter.

(c) Air trunks and casing for air ducts and coolers, and fastenings and supports for ducts, grids and meat rails, etc. are to be examined as far as practicable for damage or deterioration.

(d) Hatch covers and seals, doors and frames of cargo or cooler spaces, covers of bilges and manholes, air refreshing ducts and their closing appliances as well as thermometer tubes with their connections and fastenings are to be examined to see that they are in good condition and airtight.

(e) Bilges are to be cleaned and suction pipes, suction rose boxes, sounding pipes as well as liquid sealed traps and non-return valves for chamber drainage examined to ascertain that all sounding and drainage devices are in efficient working condition.

(f) Cooling grids, air cooler coils and air cooler drip pans with drainage are to be examined to ascertain that they are clean and in good working order.

(g) Brine coils and grids and brine return tanks, together with valves and fittings are to be examined under working condition.

(h) Primary refrigerant cooler coils and cooling grids together with valves and fittings are to be examined under working condition.

(i) Shells of shell-and-tube and double-pipe type condensers and evaporators, separators, receivers, filters, driers, coil terminals of coil-in-casing type condensers and evaporators and other pressure vessels as well as primary refrigerant gas and liquid piping, headers, condenser cooling water piping and valves are to be examined externally as far as practicable.

(j) Thermometers concerned are to be examined. The Surveyor may request one or more thermometers to be calibrated by a competent person.

(k) A general examination is to be made of refrigerant compressors, condenser cooling water pumps, brine and primary refrigerant circulating pumps, air circulating fans together with their motors, control gears and cables and the insulation resistance measured. The acceptable insulation resistance measured is to be shown in 2.7.2(r) of this Part. The results of insulation resistance measuring carried out by a competent person may be acceptable at the discretion of the Surveyor.

(l) The generating plant supplying electric power to the refrigerating machinery is to be examined generally with a view to ascertaining that the plant is being efficiently maintained.

3.2.2 Special Survey

(a) Special Survey No.1

In addition to the requirements of Annual Surveys as detailed in 3.2.1 above the following are to be complied with:

(i) All refrigerant compressors together with their prime movers are to be opened up for examination. Relief devices, suction filters and lubricating arrangements are also to be examined.

(ii) Water end covers of shell-and-tube and double-pipe type condensers are to be removed for examination of tubes, tube plates and covers.

(iii) Condenser cooling water pumps, including the reserve pump which may be used for other services, as well as brine and primary refrigerant circulating pumps are to be examined under working condition and if deemed necessary by the Surveyor, these pumps may be opened up for examination.

(iv) Brine coils and grids are to be hydraulically tested for tightness to a pressure of 1.5 times the working pressure or 0.4 MPa, whichever is the greater.

(v) Primary refrigerant cooler coils and cooling grids together with valves and fittings, gas condensers, evaporators and receivers are to be leak tested for tightness when under the refrigerant pressure prevailing the system with the refrigerating machinery at rest and the regulating valves opened sufficiently to obtain an approximate balance of pressure throughout the system.

(vi) The Surveyor is to satisfy himself that all pressure relief valves and safety discs throughout the refrigerating machinery and appliances are in good order.

(vii) At exposed places a sufficient amount of the insulation of refrigerant and brine pipes is to be removed and pipes examined, if deemed necessary by the Surveyor.

(b) Subsequent Special Surveys

In addition to the requirements for Special Surveys No.1 as defined in 3.2.2(a) above, the following are to be complied with:

(i) Coils of coil-in-casing condensers and evaporators are to be removed for examination and pressure tested to a pressure as specified in 4.17 of Part X or their relief valve setting pressure, whichever is the smaller, to prove tight. Where it is impracticable to remove the coils they may be examined from inspection holes and pressure tested in place.

(ii) Shell-and-tube condensers and evaporators are to have end covers removed and to be pressure tested under the same pressure as that required in (i) above.

(iii) Where brine or water is used for sub-cooling the primary refrigerating liquid in heat exchangers of the shell-and-tube type, the heat exchangers are to be examined and pressure tested in the same manner as that required for condensers in (ii) above. Double-pipe type heat exchangers are to be examined as far as practicable with the refrigerant gas piping under the same pressure as that required for condensers in (ii) above. Other types of heat exchangers using brine or water are to be examined and pressure tested at the discretion of the Surveyor according to the design of such equipment.

(iv) Primary refrigerant cooling grids or air cooler coils in the refrigerated chamber are to be pressure tested in place under a pressure as specified in 4.17 of Part X.

3.2.3 Loading port surveys

(a) When a loading port certificate is required by the owner or his representative, a survey as detailed in (d) hereunder is to be carried out at the loading port.

(b) In the case of ships engaged on voyages of less than 2 months duration, a Loading Port Certificate is to be considered valid for 2 months, provided cargoes carried are such a nature as not to damage the insulation or appliances in refrigerated chambers, nor to affect by taint or mould refrigerated cargoes loaded during that period.

(c) If the ship loads at more than one port, one survey only at the first loading port is to be required, provided it includes the examination of all refrigerated chambers which are to be used for refrigerated cargo during the voyage and general cargo is not subsequently carried in any of the chambers prior to loading the refrigerated cargo.

(d) Requirements of loading port survey are to be as follows:

(i) Refrigerated chambers are to be examined in any empty state to ascertain that they are cleaned and free of odour which may adversely affect the cargo to be loaded.

(ii) Brine or other refrigerant pipe grids, cooler coils and connections are to be examined to ascertain that they are free from leakage.

(iii) Wood sheathings and cargo battens are to be examined to ascertain that they are well fitted in position.

(iv) Insulation and linings are to be examined to ascertain that no damage has been sustained prior to the loading of the refrigerated cargo.

(v) Scuppers and bilge suctions draining refrigerated chambers are to be examined to ascertain that they are in good working order, and that liquid sealed traps are primed.

(vi) The refrigerating machinery is to be examined under working condition, and temperatures in the refrigerated chambers are to be noted.

(e) Where any repair is deemed necessary by the Surveyor, it is to be carried out immediately to his satisfaction before the new cargo is loaded. Any indication of defective insulation not considered to warrant immediate attention is to be noted and specially reported.

3.3 Surveys of Inert Gas Systems

3.3.1 Annual Surveys

At each Annual Survey the inert gas system is to be generally examined so far as can be seen and placed in satisfactory condition. The survey is to include the following items:

(a) External examination of all components and piping including scrubbers, fans, cooling water pumps, compressors, washing equipment, valves, stand pipes and screens.

(b) Confirmation of proper operation of inert gas blowers.

(c) Observation of the operation of the scrubber room ventilation system.

(d) Deck seal or double block and bleed assemblies, and non-return valves are to be examined externally and proven in operation. Automatic filling and draining of deck seals, operation of non-return valves and double block and bleed assemblies, and the water carryover are to be checked.

(e) Verification of the operation of all remotely operated or automatically controlled valves and, in particular, flue gas isolating valves.

(f) Verification of the operation of the inter-locking feature of soot blowers.

(g) Verification of the automatic operation of gas pressure regulating valves.

(h) On completion of general repair work, a tightness test and a functional test are to be performed.

(i) Verification of the operation of the following alarms and safety devices using simulated conditions where necessary.

(i) Flue gas systems

(1) Low water pressure or low water flow rate to the flue gas scrubber.

(2) High water level in the flue gas scrubber.

(3) High gas temperature at inert gas blower discharge.

(4) Failure of inert gas blowers.

(5) Oxygen content in excess of 8% by volume.

(6) Failure of the power supply to the automatic control system for the gas regulating valve and to the oxygen content and gas pressure indicating devices.

(7) Low water level in the water seal.

(8) Gas pressure less than 100 mm water gauge.

(9) High gas pressure.

(10) Accuracy of fixed and portable oxygen measuring equipment by means of a calibration gas.

(ii) Gas generating systems

(1) Low water pressure or low water flow rate to the flue gas scrubber.

(2) High gas pressure.

(3) High gas temperature at inert gas blower discharge.

(4) Oxygen content in excess of 8% by volume.

(5) Insufficient fuel oil supply.

(6) Failure of the power supply to the generator.

(7) Failure of the power supply to the automatic control system for the generator.

(8) Accuracy of fixed and portable oxygen measuring equipment by means of a calibration gas.

(j) The Surveyor is to examine the permanent records to check the operation and maintenance of the system. Consideration may be given by the Surveyor for the crediting of certain items that have been properly documented and recorded.

(k) Additional requirements for separate inert gas generator

(i) Automatic combustion control system is to be examined and tested.

(ii) Combustion chamber and mountings are to be examined internally and externally.

(iii) Forced draft fans are to be examined.

(iv) Fuel oil service pumps are to be examined.

(l) Additional requirements for inert gas stored in bottles

(i) Bottles are to be examined internally and externally. If they can not be examined internally they are to be gauged. When considered necessary by the Surveyor, they are to be hydrostatically tested to at least 1.2 times the working pressure. Relief valves are to be proven operable.

(ii) Where an alkali (or other) scrubber is fitted in the system the scrubber, circulating pump, valves and piping are to be examined internally and externally.

3.3.2 Special Survey of inert gas system

At each Special Survey of inert gas system in addition to the requirements for the Annual Surveys in 3.3.1, the following are to be complied with:

(a) All valves, including valves at boiler uptakes, air seal valves at uptakes, scrubber isolating valves, fan inlet and outlet isolating valves, main isolating valves, re-circulating valves (if fitted), pressure/vacuum breakers and cargo tank isolating valves are to be examined.

(b) Scrubbers are to be examined.

(c) Fans (blowers) including casing drain valves are to be examined.

(d) Fan (blower) drives, either electric motor or steam turbine, are to be examined.

(e) Bellows expansion pieces are to be examined.

(f) Sea water pumps, valves and strainers for scrubbers and water seals together with piping connections at scrubbers, water seals, shell plating and the remainder of the sea water piping are to be examined.

(g) Stand pipes, where fitted, for purging in each cargo tank are to be examined.

(h) Deck seals or double block and bleed assemblies, and non-return valves are to be examined externally and internally.

(i) The Special Survey may be commenced at 4th Annual Survey and be progressed during the succeeding year with a view to completion by the 5th anniversary date. The flue gas system is to be presented for survey within 3 months before the due date of the Special Survey. The requirements for survey to qualify for the commencement of the Special Survey are to be no less than those of an Annual Survey as outlined in paragraph 3.3.1.

3.4 Survey for Dynamic Positioning System (DP-system)

3.4.1 Annual Surveys

At each Annual Survey, the vessel is to be operated for a duration of at least two hours to demonstrate that the dynamic positioning system has been maintained properly and is in good working order. The operational testing is to be carried out to the Surveyor's satisfaction and the tests are to demonstrate the level of redundancy established by the FMEA (Failure Modes and Effects Analysis).

In addition, the following items are to be generally examined and tested so far as can be seen and placed in satisfactory condition:

(a) Documentation

The following accepted documents are to be confirmed onboard the vessel as applicable:

(i) DP FMEA

(ii) DP Trial Test Procedures/Results of Trials

(iii) DP Operations Manuals

(iv) ESD (Emergency Shutdown) Operations Manual

(b) Controls and alarms

Control system, including independent emergency shut-down facility for each thruster at the main dynamic positioning control station, position keeping redundancy, and alarms and instrumentation are to be generally examined and confirmed to be functioning satisfactorily.

(c) Position and environment sensors

All available position sensors, wind sensor(s) and gyro-compass(s) are to be generally examined and confirmed to be functioning satisfactorily.

(d) For **DPS-I** notation

The operation of the automatic control system and a manual position control system including manual transfer of control between the two systems is to be confirmed to be functioning satisfactorily.

(i) Verification that any DP-system hardware changes that may affect the **DPS-I** notation for the unit have been submitted, approved, and tested as required.

(ii) Confirmation that any software revisions since the time of last Survey have been tracked and tested as appropriate by Owner and suitably documented for record.

(iii) Any hardware or software changes that have not been tested since the last performance test shall have functionality proven and recorded by a supplementary trials program to verify the effect of the modifications with regard to the approved redundancy arrangements for the unit.

(e) For **DPS-II** notation

Completion of all items for **DPS-I** notation.

The operation of two automatic control systems and a manual position control system including automatic transfer of one automatic control system to another upon failure is to be confirmed to be functioning satisfactorily. Upon failure of the two automatic control systems, it is to be verified that the manual position control is possible. Also see 3.4.1(g) below.

Additionally the followings are to be confirmed or tested:

(i) General System

(1) Black out recovery test shall be conducted.

(2) The following redundant equipment shall be disabled or disconnected in order to demonstrate operational capability after such simulated failure/condition:

- Position reference systems
- Worse case failure (e.g. switchboard, transformer, engine, or thruster as applicable)
- Network arrangements

(3) Demonstration of open bus power management systems.

(4) Demonstration of closed bus power management systems where such closed bus arrangements have been reviewed and accepted by the Society.

(ii) Standby and power redundancy

(1) Test thruster supply and generator feeder automatic transfer switches

(2) The tests will exercise the changeover functions as well as the redundant supplies.

(3) The standby and power redundancy tests may be combined with the tests of the Worst Case Failure Design Intent identified in the DP FMEA. Changeover to the standby DP control station is to be tested.

(4) Changeover to standby auxiliary services, such as seawater or freshwater cooling pumps and hydraulic pumps, shall be tested where these auxiliaries provide essential redundancy as identified in the DP FMEA.

(5) Test the switchover and isolation of redundant DC power supplies, such as in control power circuits. Where one DC power supply is failed or removed, voltage or current from the redundant DC power supply or any other source should not be present at the failed power supply.

(f) For **DPS-III** notation

Completion of all items for **DPS-II** notation.

The operation of three automatic control systems and a manual position control system including automatic transfer of one automatic control system to another upon failure is to be confirmed to be functioning satisfactorily. Manual transfer of control is to be verified possible at the third automatic control system located in the emergency back-up control station. Upon failure of the automatic control systems, it is to be verified that the manual position control is possible. Also see 3.4.1(g) below.

Additionally, the following items are to be confirmed or tested:

(i) The following redundant compartments shall be disabled or disconnected in order to prove operational capability after failure

(1) Main Control station

(2) Worst case failure compartment (e.g., engine room, switchgear room, thruster room, or other space)

(ii) Verification that no changes have been made to the watertight integrity and fire subdivisions of compartments containing elements of the DP and associated systems.

(g) Manual position control system for **DPS-I**, **DPS-II**, and **DPS-III** notations

The operation of the manual position control system using one joystick on the Navigation Bridge or DP control station and supplemented by an automatic heading control is to be confirmed to be functioning satisfactorily.

(h) Manual thruster control system

In addition to 3.4.1(c) to 3.4.1(f), the operation of the manual thruster control system using individual levers on the Navigation Bridge or DP control station is to be confirmed to be functioning satisfactorily.

(i) Alarms and instrumentation

The following audible and visual alarms including indicators at each control station are to be examined, verified operational and confirmed to be functioning satisfactorily, as applicable:

(i) Thruster power system

(1) Engine lubricating oil pressure – low*

(2) Engine coolant temperature – high*

(3) CPP hydraulic oil pressure – low and high*

(4) CPP hydraulic oil temperature – high*

(5) CPP pitch**

(6) Thruster RPM**

(7) Thruster direction**

(8) Thruster motor/semiconductor converter coolant leakage*

(9) Thruster motor/semiconductor converter temperature**

(10) Thrust motor short circuit**

(11) Thruster motor exciter power available**

(12) Thruster motor supply power available**

(13) Thruster motor overload*

(14) Thruster motor high temperature*

(ii) Power distribution system

(1) Status of automatically controlled circuit breakers**

(2) Bus bar current and power levels**

(3) High power consumers – current levels**

(iii) System performance

(1) Excursion outside operating envelope*

(2) Control system fault*

(3) Position sensor fault*

(4) Vessel target and present position and heading**

(5) Wind speed and direction**

(6) Selected reference system**

(iv) In addition, for **DPS-II** and **DPS-III** notations

(1) Thruster location (pictorial)**

(2) Percentage thrust**

(3) Available thrusters on stand-by**

(4) DP alert through consequence analyzer*

(5) Position information of individual position reference systems connected**

Notes:

* : Alarm

** : Display

(j) Uninterruptible power systems (UPS)

The uninterruptible power systems (UPS) are to be operated and confirmed to be functioning satisfactorily. The uninterruptible power systems (UPS) are to be operated without the normal main power input for 30 minutes to confirm that the batteries are capable of supplying the output power and are in satisfactory condition. The schedule of batteries is to be examined to verify that the batteries have been maintained.

(k) Communication

(i) A means of voice communication between the DP control position (navigation bridge), and the thruster room(s) is to be tested and confirmed to be functioning satisfactorily.

(ii) A means of voice communication between the DP control position (Navigation Bridge), the engine control position and any operational control centers associated with DP is to be tested and confirmed to be functioning satisfactorily.

Note: No back up required.

(l) Dynamic positioning system (DP-system)

(i) Confirmation of DP-system operations manual onboard. Verification that the manual is up to date with any modifications performed on the installation.

(ii) Verification that the failure modes and effects of any modifications or upgrades have been considered and incorporated in the operations manual.

(iii) Fail safe tests for thrusters

A single fault in the thruster system is to be such that a thruster fails to a safe mode so that the vessel's position and heading are not affected. Fail to a safe mode could be a failure to zero thrust or motor stop.

(m) The thruster installation using for DP-system

The thruster installation is to be generally examined so far as can be seen and placed in satisfactory condition. The survey is also to include:

(i) Controls and alarms

Verification of effective means of control from both the Navigation Bridge and local control stations, including alarms and indicators. The following audible and visual alarms at each control station are to be visually examined, verified operational and considered satisfactory, as applicable:

(1) Engine low lubricating oil pressure

(2) Engine coolant high temperature

(3) Motor overload

(4) Thruster RPM

(5) Thrust direction (azimuthing type)

(6) Thruster power supply failure

(7) Controllable pitch propellers hydraulic low oil pressure

(8) Controllable pitch propellers hydraulic high oil pressure

(9) Controllable pitch propellers hydraulic oil high temperature

(10) Fire extinguishing systems

(ii) Communication

Means of voice communication between the bridge control station, main propulsion control station and the thruster room are to be tested and found satisfactory.

(iii) Thruster room

Thruster room arrangements, including adequate ventilation, bilge system and alarms for enclosed modules and firefighting systems are to be examined, tested and considered satisfactory.

3.4.2 First Bottom Survey in dry dock after delivery

At the first Bottom Survey in dry dock after delivery, thruster units are to be examined and confirmed in satisfactory condition including the followings.

(a) External examination including propeller, gear housing, bolting and their securing arrangements and for seal leakage.

(b) Internal gear train examination through inspection opening. Where inspection opening is not provided, at least one unit is to be opened for examination.

(c) Lubrication oil sample analysis.

(d) In addition, for controllable pitch propellers, blade seal leak check and functional test.

Where deemed necessary by the Surveyor, non-destructive testing may be required.

In case the first Bottom Survey in dry dock after delivery is the first Special Survey after delivery, the items specified in 3.4.3 below will also apply.

3.4.3 Special Surveys

In addition to the requirements of the Annual Survey specified in 3.4.1 above, complete performance tests are to be carried out to the Surveyor's satisfaction. The schedule of these tests is to be designed to demonstrate the level of redundancy established in the FMEA for **DPS-II** and **DPS-III**. In those cases where a Continuous DP Testing Program has been accepted in 3.4.3(d) below, this may be considered by the Surveyor for acceptance in lieu of conducting the complete performance test.

(a) Thrusters are to be surveyed as part of the Special Survey in accordance with 2.3.4 of this Part.

(b) Full power tests of thrusters and generators are to be conducted.

(c) The prime movers of thrusters are to be examined as applicable in accordance with 2.7.2 of this Part.

(d) Annual DP Testing Program

If the vessel is on Machinery Continuous Survey (MCS), the Owner may submit a Continuous DP Testing Program to conduct the required FMEA and performance testing throughout the survey cycle. The program may schedule approximately 20% of the FMEA and performance testing, along with the requirements specified in 3.4.1 above for the Annual Survey each year. This Annual DP Testing Program is to be submitted for review. The testing program shall be kept on board the vessel for reference at each Annual Survey.

Appendix 1
Loading Computer System (LCS) for Stability and Longitudinal Strength

A1.1 General Requirements

A1.1.1 Application

(a) The requirements of this appendix apply to ships equipped with computer based systems for calculation and control of loading conditions for compliance with the applicable stability, longitudinal and local strength requirements.

A1.1.2 Class Notation

(a) Ships equipped with loading computer systems designed, manufactured and tested in compliance with the requirements of this appendix, for calculation and control of stability, longitudinal and local strength, may be assigned the additional class notation **LCS**.

A1.1.3 General requirements

(a) The Loading Computer System is regarded as supplementary to the Loading Manual and Stability Booklet and if relevant the Grain Loading Manual which are always to be provided on board.

(b) The user's manual is always to be provided for the loading computer.

(c) The user's manual and the computer software must be prepared in a language understood by the user. If this language is not English, a translation into English is to be included.

(d) If the software includes on-line interface, for instance remote tank sounding or draught reading, it is assumed that the remote system is maintained and calibrated as recommended by the manufacturers.

(e) On-line computers are to be connected through a gateway if connected to the ship's network serving main functions. The gateway shall have read only possibility unless the computer is approved for two-way communication.

(f) The software may be type approved or approved on a case by case basis for a specific ship.

(g) The software may be type approved, the validity and limitations of the type approval are to be carefully noted. If a type approval is found not to cover all parts of relevance for a specific ship, addition testing and documentation as for a case-by-case approval may be required.

A1.1.4 Documentation

(a) Hardware documentation

If the hardware is not type-approved, the concerned documentation is to be submitted.

(b) Documentation needed when software is type approved

In case of type-approved software, the following documentation is to be submitted:

(i) Preliminary test conditions (print of input and output data).

(ii) Stored characteristic data. (e.g. hydraustatics, cross curves, VCG or GM limit curves, lightweight definition, tank data and associated limits to still water shear force, bending moments and torque, as applicable, and with explanation as found necessary.)

(iii) Number, position and limits of read-out points. The shear force limits are to be specially considered for ships sides and longitudinal bulkheads. The loading computer is to take into account the local correction of the shear forces for conditions with greater pressure differences on the ship's bottom structure.

(iv) Final test conditions (print of input and output data)

In case the user's manual is tailor made for a specific ship, the manual is to be submitted as well.

(c) Documentation needed for case-by-case approval of the software

With a case-by-case approval of the software, the following documentation is to be submitted:

(i) Software description and specifications, including flow chart.

(ii) User's manual, including flow chart.

(iii) Preliminary test conditions (print of point and output data).

(iv) Stored characteristic data. (e.g. hydrostatics, cross curves, VCG or GM limit curves, lightweight definition, tank data and associated limits to still water shear force, bending moments and torque, as applicable, and with explanation as found necessary.)

(v) Number, position and limits of read-out points

The shear force limits are to be specially considered for ships sides and longitudinal bulkheads. The loading computer is to take into account the local correction of the shear forces for conditions with greater pressure differences on the ship's bottom structure.

(vi) Final test conditions (print of input and output data)

A1.1.5 General software requirements

(a) Software

(i) The software and the stored characteristic data must be protected against erroneous use.

(ii) The software design is to be such that it limits possible input errors by the user, for instance tank volume input is not to exceed maximum tank volume, or negative volume input to be accepted.

(iii) The software is to be user-friendly, preferably with graphic presentation of loading conditions and on-line user's task help.

(iv) The software is to include loading limitations. A warning is to be given if these limits are exceeded.

Note:

Loading limitations should include minimum/maximum draught, maximum trim, shear force and bending moment limits, minimum/maximum metacentric height (GM), cargo tank filling height as a function of cargo density, limits to distributed loads on deck, filling of ballast and cargo tanks etc.

(v) The software is to present relevant parameters of loading conditions, such as displacement, draughts forward, midship and aft, trim, center of gravity, metacentric height, free surface correction, shear forces, bending moments, torque and local strength as well as the limiting values for those parameters and an overall judgment whether all loading parameters are within the limiting values.

(vi) If intended for stability calculations, the software must include effect of free surface from slack tanks on the initial metacentric height (GM) and the righting lever (GZ) as well as the effect of external heeling moments, if applicable.

Note:

If the software is based on interpolation on even keel hydrostatics only, the limiting trim will be considered as maximum 1% of the ship's length.

(vii) If the software calculates damage stability, a list of damage cases is to be included. Any intended loading condition must be checked for these damage cases. The results are to include the equilibrium position and the GZ curve after damage, as well as criteria control.

Software is to give an overall judgment whether all the damage cases were found comply with the applicable requirements, within an acceptable time.

(viii) If the software includes on-line interface, for instance remote tank sounding, or draught reading, a warning is to be given in case of on-line interface failure. Further, it is to be possible to give the on-line input manually.

(ix) In case of discrepancy between calculated and actual displacement, the software is to use the actual value and correct the center of gravity in a satisfactory manner. The normal procedure is located in the center of gravity of the deadweight.

A1.2 Approval and Testing Requirements

A1.2.1 Approval principles

(a) The requirements of hardware is to be complied with the Rules.

(b) The software can be either type approved or case-by-case approved. The latter case is only in condition with system installation on board a specific ship. In either case, relevant requirements stated in section A1.1 are to be complied with.

(c) Approval and certification.

(i) Documentation according to A1.1.4 including preliminary test conditions in accordance with A1.2.2 is to be submitted for approval.

(ii) Final test conditions according to A1.2.2, are to be tested on board in the presence of a surveyor as described in A1.2.3.

(iii) Certificate of the loading computer system will be issued after checking of final test conditions on board.

A1.2.2 Test conditions

(a) General

(i) Preliminary test conditions are based on estimated lightweight data. Final test conditions are those conditions which are based on lightweight data obtained from the inclining test or the lightweight survey.

(ii) Special or additional test conditions as specified in (vii) may be required by the Society in case the standard test conditions do not fully expose critical aspects of software, e.g. limitations which need to be demonstrated in particular.

(iii) The units and reference system of the test conditions are to be the same as used in the loading manual and the stability booklet.

(iv) At least 4 preliminary test conditions are to be submitted. The corresponding final test conditions are to be submitted after satisfactory result on board in the presence of a CR Surveyor.

(v) The selected test conditions are to be representative of the service conditions and the same as the conditions presented in the approved loading manual or the stability booklet. The 4 standard test conditions are to be as follows:

(1) Light ship condition.

(2) Ballast or partly loaded condition.

(3) Fully loaded condition.

(4) Arbitrary loading condition given extreme values.

(vi) Documentation of test conditions is to include input and output data for each condition.

(vii) Additional test conditions, if required, are to be tested of limiting loading parameters, such as maximum draught, maximum trim or maximum KG. Further, they are to include extreme loading conditions, with varying loading parameters such as tank filling heights as a function of cargo density, limits to distributed loads on deck, shear force limits, bending moments and torque as far as applicable.

A1.2.3 Testing and certification

(a) General

(i) At least 4 of the final test conditions are to be tested on board in the presence of a CR surveyor, before the loading computer certificate is issued.

(ii) The results from the test conditions must not deviate significantly from the results in the approved loading manual or stability booklet. If found unacceptable, the reason for the deviation is to be clarified.

(iii) A copy of the final test conditions endorsed by a surveyor is to be kept on board.

(iv) If the final loading manual or the final stability booklet has not been approved before delivery, testing on board may take place after these documents have been approved.

Appendix 2
Guidance for Inclining Test

A2.1 General

This annex shows the standard method of inclining test.

A2.2 Preparation for the Test

A2.2.1 Data to be submitted

The following plans are to be available at the time of the test as necessary.

(a) General arrangement drawing.

(b) Tank capacity plan.

(c) Hydrostatic curves.

(d) Draft marks locations

A2.2.2 Inclining test condition

(a) The ship is to be as near to completion in lightweight condition as possible. Equipment used by the yard on board is to be moved outboard as far as possible.

(b) Prior to the inclining test, lists of all items which are to be added, removed, or relocated are to be prepared. These weights and their locations are to be accurately recorded.

(c) The total value of missing weights is not to exceed 2% and surplus weights, excluding liquid ballast, fuel oil, diesel oil and fresh water, not exceed 4% of the light ship displacement. For smaller ships, higher percentages may be allowed.

(d) All objects are to be secured in their regular positions. All weights which may swing or shift are to be secured in their sea stowage position. If more than one sea stowage positions are possible, the actual stowage position used during the test is to be recorded.

(e) The ship is to be cleared of residues of cargo, tools, debris, scaffolding and snow. Icing of the inner and outer surfaces, the underwater hull included, is not permitted.

(f) Bilge water and liquids accumulated on deck are to be removed in order to exclude an influence on measurements.

(g) Only the persons participating in the inclining test are to be stay on board the ship.

A2.2.3 Tank contents

(a) As a rule, all tanks are to be either full or empty. The number of tanks containing liquids is to be kept to a minimum.

(b) Soundings and density of liquids in tanks are to be taken in tanks containing liquids. Where tanks are partly filled, free surface effect which has an influence on the result of the test is to be estimated from the shape of tanks.

(c) Where tanks are intended to be filled completely, removal of air pockets is to be paid attention. All empty tanks are to be adequately dried.

(d) All connections between tanks are to be closed.

A2.2.4 Mooring arrangements and environmental conditions

(a) Mooring lines are to be free of any transverse tension during the reading. No external moments are to be brought upon the ship from mooring lines. If possible, the ship is to be located in a calm, protected area free from external forces.

(b) The depth of water under the hull is to be sufficient to ensure that the hull will be entirely free of the bottom even if the ship is inclined, taking into account tide differences, if applicable.

(c) The following mooring arrangements are to be referred to as the standard.

(i) A ship is moored by bow and stern lines on both sides of the ship attached at or near the center-line. Longitudinal mooring lines are to be as long as practicable.

(ii) A ship is moored by bow and stern lines on one side only and supplemented by spring lines.

(d) Where a single bow or stern line is proposed, the ship's freedom of movement is to be checked not adversely to effect the conduct of the experiment.

(e) When tidal currents are present the experiment is to be conducted at or around slack tide as far as possible.

(f) The ship's gangway is to be in the stowed position, and any shore gangway is to be removed during the inclining test. Cables, hoses, etc. are as few as possible to be connected to shore. Those which are needed are to be slack.

(g) To carry out the inclining test under the influence of wind and currents may be permitted, provided the accuracy of the test is assured.

A2.2.5 Inclining weights

(a) As a rule, not less than four solid weights are to be used for the inclining test. Use of water ballast transfer to incline the ship may be permitted only in cases where it is impracticable to incline the ship using solid weights.

(b) The solid weights are to be heavy enough to comply with the requirements in A2.3.3(a). Each solid weight is to be almost equal in mass.

(c) Each weight is to be compact, impervious to water. Its center of gravity is to be accurately determined.

(d) Each inclining weight is to be marked with an identification number. The inclining weights are to be weighted with a calibrated instrument to the satisfaction of the Surveyor.

A2.2.6 Measuring devices

(a) In general, not less than two measuring devices, one of which is to be a pendulum or a U-tube, are to be used to determine the ship's inclination.

(b) Where pendulums are used, the pendulums are normally to be long enough to give a measured deflection, to each side of upright, of at least 100 mm, and be suspended at sheltered locations to protect from the wind.

(c) Where U-tubes are used, the length and arrangement of the U-tube is to be such as to ensure the accuracy of its readings.

(d) Where stabilographs are used, the calibration of the instrument are to be verified to the Surveyor's satisfaction prior to the experiment.

A2.2.7 Initial Condition and Stability

(a) The ship is to be preferably upright prior to the inclining. However, an initial list of the ship not exceeding 0.5° is permissible.

(b) Initial trim of the ship is not to exceed 1% of the ship's length.

(c) The persons conducting the test are to be satisfied that the ship has adequate, positive stability and acceptable stress levels during the test.

A2.3 Inclining Test and Record of Data

A2.3.1 Accuracy of data

Measurement of inclining test data is to be as accurate as possible and to the satisfaction of the attending surveyor.

A2.3.2 Draught and water density measurements

(a) Draught is to be measured at fore, aft and midship draught mark at both sides immediately before the test.

(b) The distance from the draught mark, which is used as a reference point, to base line is to be verified prior to the test.

(c) It is to be ensured that no significant changes have occurred in the condition of the ship during the test.

(d) In case of non-coincidence of separate measuring points, additional measurements are to be taken.

(e) Water samples are to be taken at suitable depth to keep away from surface water which could contain rainwater.

A2.3.3 Weight shifts

(a) Positioning of inclining weights which gives a maximum heeling moment is to result in a minimum heel angle of 1° up to a maximum 4° from upright, depending upon ship type and size. Where it is impracticable that the ship is inclined above 1° because of too large GM or other factors, the precision of measurement is to be enhanced taking account of characteristic and condition of the ship and condition of the test.

(b) Procedures of shifting weights are shown in Table I A2-1.

(c) The transverse shift distance is to be as great as practicable. The inclining weights are to be positioned symmetrically to the center line in order to measure the transverse shift distance easily.

(d) The inclining weight positions are to be marked on the deck to ensure that consistency in placement is achieved.

A2.3.4 Measurement of heel angle

(a) Pendulum, or U-tube reading on the recording batten or scale is to be registered by either of the following ways:
   (i) On the final stable position of the pendulum or liquid column after stopping of ship motions due to shifting of the inclining weight;
   (ii) By marking the center of residual motion about the mean position.

(b) When using other devices, angles of inclination are to be recorded according to instructions supplied for each device.

(c) Whenever the inclining weights are shifted, the plot of heel angle against heeling moment is to be made. If there is a deviation of points from the straight line passing through the initial position, the deflections and moments are to be checked and corrected prior to the next weight movement.

(d) It is to be checked that weights remain on assigned positions and all mooring lines and so on remain slack during measurement.

A2.3.5 Other relevant data

(a) In the case where the inclining test is carried out by means of transfer of water, it has to be possible to evaluate accurately the weight and the center of the shifted liquid in relation to the ship's heel and trim.

(b) The weather conditions, i.e., wind speed and direction relative to the ship, sea state, air and water temperatures, etc., during the test are to be recorded.

A2.4 Postponement of the Test

If during the course of inclining test circumstances arise such that the requirements in this chapter are not complied with, the surveyor may advise the person in charge to postpone the test.

A2.5 Inclining Test Report

A2.5.1 The surveyor is to ensure that the data given in the report is consistent with that gathered during the test and to sign the report.

A2.5.2 Test report containing all data gathered during the test, the result calculated from these data and calculating papers is to be made, and to be submitted to the Society.

Table I A2-1
Procedures of Shifting Weights

	Four		Six	
	Port Side	Starboard Side	Port Side	Starboard Side
No.0	2, 4	1, 3	2, 4, 6	1, 3, 5
No.1	4	1, 2, 3	4, 6	1, 2, 3, 5
No.2		1, 2, 3, 4		1, 2, 3, 4, 5, 6
No.3	1	2, 3, 4	6	1, 2, 3, 4, 5
No.4	1, 3	2, 4	2, 4, 6	1, 3, 5
No.5	1, 2, 3	4	1, 2, 3, 4, 6	5
No.6	1, 2, 3, 4		1, 2, 3, 4, 5, 6	
No.7	2, 3, 4	1	1, 2, 4, 6	3, 5
No.8	2, 4	1, 3	2, 4, 6	1, 3, 5

Notes:
(1) The numbers shown in this table show identification number of the weights
(2) The underlined number indicates the last weight or weight group shifted.

Appendix 3

Load-Line Markings

For Ocean-going Ships

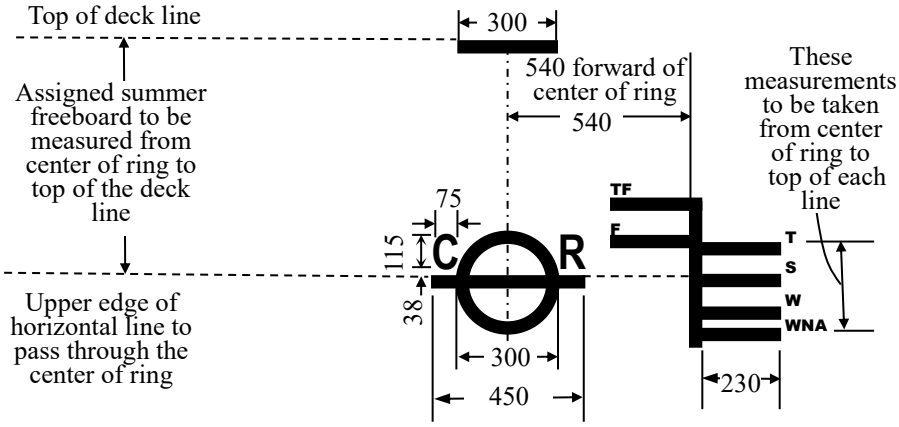

For Ocean-going Ships with Timber Freeboards

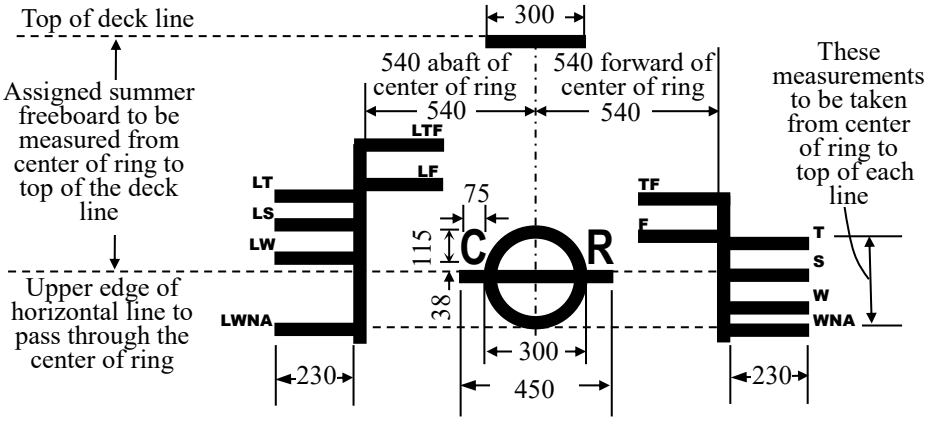

Notes:

(1) The center of the ring is to be placed on each side of the ships at the middle of the length as defined in the Load Line Regulations. The ring and lines are to be permanently marked, as by center punch, chisel cut or bead of weld.

(2) The breadth of all lines is 25 mm.

(3) The size of all letterings are 50 × 32 mm. except W 50 × 45 mm, unless otherwise noted.

For domestic voyages ships

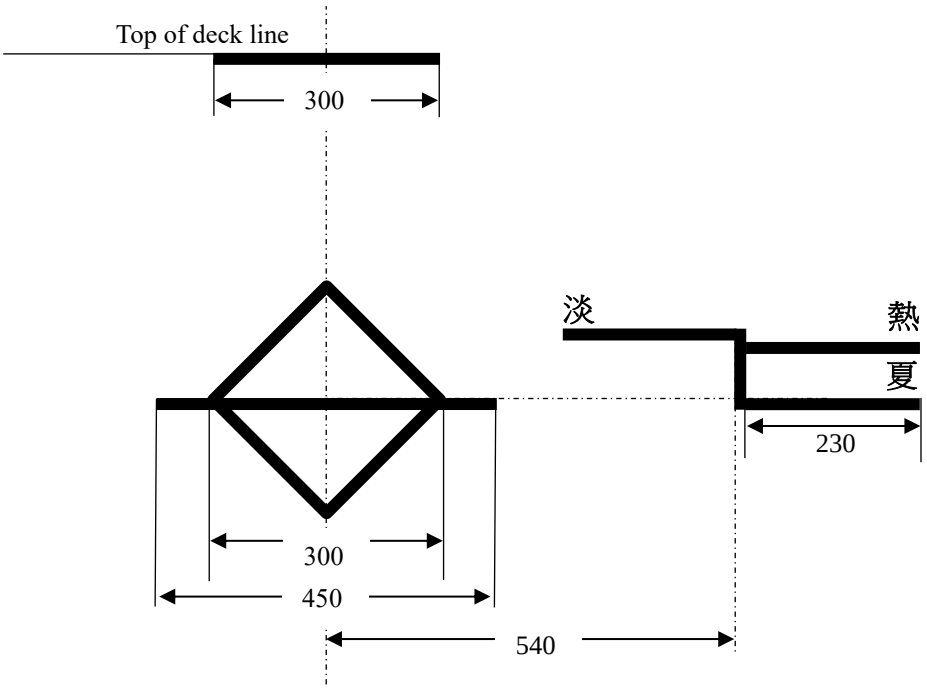

Notes:

(1) The center of the square is to be placed on each side of the ship at the middle of the length as defined in the Load Line Regulations. The square and lines are to be permanently marked, as by center punch, chisel cut or bead of weld.

(2) The breadth of all lines is 25 mm.

(3) The size of the Chinese characters 「淡」,「夏」,「熱」are 50 × 45 mm.

Appendix 4

Additional Information on Hull Thickness Measurement

A4.1 Thickness Measurements Acceptance Criteria

A4.1.1 For ship built before 2020, the acceptance criteria for thickness measurements are according to CR Notice No. CRN-08-001(T).

A4.1.2 For ship built 2020 or later, the acceptance criteria for thickness measurements are according to Table I A4-1 to Table I A4-5.

Table I A4-1
Individual Wastage Allowances, Non-CSR Tankers 90 m ≤ L(5), (6), (7) and (8)

Ordinary and High Strength Steel	Double Bottom Tankers
Strength Deck Plating	20%
Forecastle, Poop and Bridge Deck Plates; Superstructure End Bulkheads	30%
Sheer Strake Plates	20%
Side Shell Plates	20%
Bilge Strake Plates	20%
Bottom Plates	20%
Keel Plates(4)	
Outermost Strake of Inner Bottom	20%
Other Plates of Inner Bottom	20%
Top Strake of Longitudinal Bulkheads and Top Strake of Topside Tank Sloping Plating	20%
Bottom Strake of Longitudinal Bulkheads	20%
Other Plates of Longitudinal Bulkheads, Topside tank Sloping Plating, Hopper Tank Sloping Plating and Transverse Bulkheads	20%
Internals including Longitudinals, Girders, Transverses, Struts, Bulkhead Webs and Stringers, and Brackets	20%
Plates in way of Top of Tanks	25%

Notes:

(1) Internals included in longitudinal strength must be continuous or be effectively developed at ends, throughout amidships 0.4L.

(2) Structure must meet individual member thickness and average wastage.

(3) If design was originally approved on basis of engineering analysis (such as car carriers and other specialized ships), or if owner specially request, the wastage may be assessed on engineering basis (i.e., acceptable stress levels and structural stability).

(4) Keel plates are to be renewed when they reach the minimum allowed thickness for adjacent bottom plating.

(5) The individual wastage allowances are acceptable, provided the Section Modulus is not less than 90% of the greater Section Modulus required: a) at the time of new construction or b) Z_{min} by 3.2.2 of Part II.

(6) For tankers 130 m in length and above and over 10 years of age, sectional area calculations are to be carried out by the Society.

(7) For ships built to other society rules, the Society carrying out the initial plan review is to be contacted for wastage allowances.

(8) For CSR ships type, the individual wastage allowance is defined in accordance with Part 1, Chapter 13 of IACS CSR for double hull oil tankers and for bulk carriers.

Table I A4-2
Individual Wastage Allowances, Liquefied Gas Carriers, 90 m ≤ L (5) & (6)

Ordinary and High Strength Steel	Membrane LNG Carriers	Liquefied Gas Carriers with Independent Tanks
Strength Deck Plating	20%	20%
Continuous Long'l Hatch Coamings & Above Deck Box-Girders	20%	20%
Forecastle, Poop and Bridge Deck Plates; Superstructure End Bulkheads	30%	30%
Sheer Strake Plates	20%	20%
Side Shell Plates	20%	25%
Bilge Strake Plates	20%	25%
Bottom Plates	20%	25%
Keel Plates(4)		
Outermost Strake of Inner Bottom	20%	20%
Other Plates of Inner Bottom	20%	25%
Top Strake of Longitudinal Bulkheads and Top Strake of Topside Tank Sloping Plating	20%	20%
Bottom Strake of Longitudinal Bulkheads	20%	25%
Other Plates of Longitudinal Bulkheads, Topside Tank Sloping Plating, Hopper Tank Sloping Plating and Transverse Bulkheads	20%	25%
Internals including Longitudinals, Girders, Transverses, Struts, Bulkhead Webs and Stringers and Brackets	20%	25%
Plates in way of Top of Tanks	25%	30%
Underdeck Box Girders (Long'l or Transverse)	20%	20%

Notes:

(1) Internals included in longitudinal strength must be continuous or be effectively developed at ends, throughout amidships 0.4L.

(2) Structure must meet individual member thickness and average wastage.

(3) If design was originally approved on basis of engineering analysis (such as car carriers and other specialized ships), or if owner specially request, the wastage may be assessed on engineering basis (i.e., acceptable stress levels and structural stability).

(4) Keel plates are to be renewed when they reach the minimum allowed thickness for adjacent bottom plating.

(5) The individual wastage allowances are acceptable, provided the Section Modulus is not less than 90% of the greater Section Modulus required: a) at the time of new construction or b) Z_{min} by 3.2.2 of Part II.

(6) For ships built to other society rules, the Society carrying out the initial plan review is to be contacted for wastage allowances.

Table I A4-3
Individual Wastage Allowances, Ships, 90 m ≤ L (9), (10) and (11)

Ordinary and High Strength Steel	Non-CSR Bulk Carriers, Ore Carriers and OBOs	Container ships	Transv'ly framed ships Dry cargo barges 90 m ≤ L Tank Barges 90 to 122 m(8)	Ships with a combination of transverse and longitudinal framing.
Strength Deck Plating	20%	20%	25%	20%
Continuous Long'l Hatch Coamings & Above Deck Box-Girders	20%	20%	25%	20%
Deck Plates within Line of Hatches and at Ends.	30%	30%	30%	30%
Forecastle, Poop and Bridge Deck Plates; Superstructure End Bulkheads	30%	30%	30%	30%
Tween Deck Plates	--	--	30%	--
Sheer Strake Plates	20%	20%	25%	20%
Side Shell Plates	20%	25%	25%	25%
Bilge Strake Plates	20%	25%	25%	25%
Bottom Plates	20%	25%	25%	25%
Keel Plates(4)				
Outermost Strake of Inner Bottom	25%	20%	30%	30%
Other Plates of Inner Bottom	25%	25%	30%	30%
Top Strake of Longitudinal Bulkheads and Top Strake of Topside Tank Sloping Plating	20%	20%	25%	25%
Bottom Strake of Longitudinal Bulkheads	20%	25%	25%	25%
Other Plates of Longitudinal Bulkheads, Topside Tank Sloping Plating, Hopper Tank Sloping Plating and Transverse Bulkheads (5) & (6)	20%	25%	25%	25%
Internals including Longitudinals, Girders, Transverses, Struts, Bulkhead Webs and Stringers, Brackets and Hatch Side Girders	20%	25%	25%	25%
Plates in way of Top of Tanks	25%	30%	30%	30%
Underdeck Box Girders (Long'l or Transverse)	20%	20%	20%	20%
Hatch Covers(7), Hatch coamings and brackets	30%	30%	30%	30%

Notes:

(1) Internals included in longitudinal strength must be continuous or be effectively developed at ends, throughout amidships 0.4L.

(2) Structure must meet individual member thickness and average wastage.

(3) If design was originally approved on basis of engineering analysis (such as car carriers and other specialized ships), or if owner specially request, the wastage may be assessed on engineering basis (i.e., acceptable stress levels and structural stability).

(4) Keel plates are to be renewed when they reach the minimum allowed thickness for adjacent bottom plating.

(5) Bulk Carriers for which IACS UR S19 applies to the corrugated transverse watertight bulkhead between cargo holds 1 and 2 are to be assessed in accordance with S19 for initial compliance and subsequent continued compliance at each Intermediate Survey and Special Periodical Survey – Hull.

(6) Bulk carriers for which UR S18 applies to the corrugated transverse W.T. bulkheads are to comply with the steel renewal provisions of S18.

(7) The hatch covers of bulk carriers to which IACS UR S21 applies are to comply with the steel renewal provisions of UR S21.6.

(8) Wastage allowances in Table I A4-1, depending on the barge's construction, apply to tank barges over 122 m in length.

(9) The individual wastage allowances are acceptable, provided the hull girder Section Modulus is not less than 90% of the greater Section Modulus required: a) at the time of new construction or b) Z_{min} by 3.2.2 of Part II.

(10) For ships built to other society rules, the Society carrying out the initial plan review is to be contacted for wastage allowances.

(11) For CSR ships type, the individual wastage allowance is defined in accordance with Part 1, Chapter 13 of IACS

CSR for double hull oil tankers and for bulk carriers.

Table I A4-4
Individual Wastage Allowances, Ships, L < 90 m

Main Deck Plating	25%
Bottom Plating	25%
Keel Plating	25%
Sheer Strake	25%
Bilge Strake	25%
Side Shell Plating	30%
Forecastle	30%
Internals and Bulkheads	30%

For ships built to other society rules, the Society carrying out the initial plan review is to be contacted for wastage allowances.

Notes:

(1) Internals included in longitudinal strength must be continuous or be effectively developed at ends, throughout amidships 0.4L.

(2) The values shown in the table are the minimum requirements for individual members and plates.

(3) In addition to satisfying the individual member and plate requirements, it should be verified that the hull girder section modulus is not less than 90% of the greater Hull Girder Section Modulus required either:

a) At the time of new construction

b) Z_σ as specified in 3.2.1 of Part XV

(4) For ships less than 60 m only, maximum loss of deck or bottom area is 20% of Rule required area.

(5) For ships built to other society rules, wastage allowance based on the previous society requirements may apply.

Table I A4-5
Aluminum Wastage Allowances, Ships, L < 90 m

Main Deck Plating	15%
Bottom Plating	15%
Keel Plating	15%
Sheer Strake	15%
Bilge Strake	15%
Side Shell Plating	20%
Forecastle	20%
Internals and Bulkheads	20%

For Ships built to other society rules, the Society carrying out the initial plan review is to be contacted for wastage allowances.

Tel: *+886 2 25062711*
Fax: *+886 2 25074722*
E-mail: *cr.tp@crclass.org*
Website: *http://www.crclass.org*
© CR – All rights reserved

財團法人驗船中心
CR CLASSIFICATION SOCIETY

RULES FOR THE CONSTRUCTION AND CLASSIFICATION OF STEEL SHIPS 2022

PART II – HULL CONSTRUCTION AND EQUIPMENT

July 2022

財團法人驗船中心
CR CLASSIFICATION SOCIETY

RULES FOR THE CONSTRUCTION AND CLASSIFICATION OF STEEL SHIPS 2022

PART II – HULL CONSTRUCTION AND EQUIPMENT

July 2022

RULES FOR THE CONSTRUCTION AND CLASSIFICATION OF STEEL SHIPS

PART I CLASSIFICATION AND SURVEY

PART II HULL CONSTRUCTION AND EQUIPMENT

PART III SPECIAL SERVICE AND TYPE OF SHIPS

PART IV MACHINERY INSTALLATIONS – CONSTRUCTION AND SHAFTING

PART V BOILERS, PRESSURE VESSELS, THERMAL OIL HEATERS AND INCINERATORS

PART VI PIPING AND PUMPING SYSTEMS

PART VII ELECTRICAL INSTALLATIONS

PART VIII AUTOMATIC OR REMOTE CONTROL AND MONITORING SYSTEMS

PART IX FIRE PROTECTION, DETECTION AND EXTINCTION

PART X REFRIGERATED CARGO INSTALLATIONS

PART XI MATERIALS

PART XII WELDING

PART XIII NAVIGATIONAL SAFETY SYSTEMS

PART XIV GOAL-BASED SHIP CONSTRUCTION STANDARDS SHIPS

PART XV HULL CONSTRUCTION AND EQUIPMENT FOR SHIPS LESS THAN 90 M IN LENGTH

List of major changes in Part II from 2019 edition

34.1	Amend No.1	12.5	Amend No.2
34.3	Amend No.1	23.1.7	Amend No.2
Table II 34-2	Amend No.1	25.1.6	Amend No.2
1.5.4~1.5.5	Amend No.2	25.2.1	Amend No.2
1.5.8	Amend No.2	25.3.6	Amend No.2
1.12.1	Amend No.2	25.4.6~25.4.7	Amend No.2
1.13.4(a)	Amend No.2	25.9.3(b)(i)	Amend No.2
Table II 1-6	Amend No.2	25.9.3(b)(viii) & (ix)	Amend No.2
Table II 1-6~1-9	Amend No.2	25.11	Amend No.2
Table II 1-10	Amend No.2	Table II 25-2	Amend No.2
Table II 1-11~13	Amend No.2	30.6.1(c)	Amend No.2
Table II 1-14	Amend No.2	31.5.3(b)	Amend No.2

Acronyms

AIS	Automatic Identification System
ANTS	Automatic Navigation and Track-keeping System
ARPA	Automatic Radar Plotting Aid
BC Code	Code of Safe Practice for Solid Bulk Cargoes
BNWAS	Bridge Navigational Watch Alarm System
CA	Controlled Atmosphere
CDI	Chemical Distribution Institute
COW	Crude Oil Washing
CPA	Closest Point of Approach
CPP	Controllable Pitch Propeller
CSC	International Convention for Safe Containers
CSR	Common Structural Rules
CTOD	Crack Tip Opening Displacement
ECDIS	Electronic Chart Display and Information System
EEBD	Emergency Escape Breathing Devices
ENC	Electronic Navigational Chart
ESP	Enhance Survey Plan
ETA	Emergency Towing Arrangement
FEU	Forty-foot Equivalent Unit
FMEA	Failure Mode & Effect Analysis
FRP, GRP	Fibreglass Reinforced Plastics
FTP Code	International Code for Application of Fire Test Procedures
GBS	Goal-Based ship construction Standards
GDC	General Dry Cargo
GLONASS	Global Navigation Satellite System
GMDSS	Global Maritime Distress and Safety System
GPS	Global Positioning System
HAZ	Heat Affected Zone

HHP anchor	High Holding Power anchor
HSC	High Speed Craft
HTS	High Tensile Steel
IACS	International Association of Classification Societies
IBC Code	International Code for the Construction and Equipment of Ships Carrying Dangerous Chemicals in Bulk
ICS	The International Chamber of Shipping
IEC	International Electrotechnical Commission
IGC Code	International Code for the Construction and Equipment of Ships Carrying Liquefied Gases in Bulk
ILO	International Labour Organization
IMDG Code	International Maritime Dangerous Goods Code
IMO	International Maritime Organization
ISO	International Standards Organization
LAN	Local Area Network
LCS	Loading Computer System
LEL	Lower Explosive Limit
LRIT	Long-range Identification and Tracking of ships
MARPOL	International Convention for the Prevention of Pollution from Ships
MARVS	Maximum Allowable Relief Valve Setting
MEPC	Marine Environment Protection Committee
MLC	Maritime Labour Convention
MSC	Maritime Safety Committee
NDT	Nondestructive Testing
OCIMF	The Oil Companies International Marine Forum
OOW	Officer Of the Watch
PA	Public Address
PMA	Permanent Means of Access
PMS	Planned Machinery Maintenance Scheme
RH	Relative Humidity

RIT	Remote Inspection Techniques
PSPC	Performance Standard for Protective Coating
SENC	System Electronic Navigational Chart
SHHP anchor	Super High Holding Power anchor
SOLAS	International Convention for the Safety of Life at Sea
SRE	Ship Recycling
STCW	International Convention on Standards of Training, Certification and Watch-keeping for Seafarers
STS operation	Ship-To-Ship operation
S-VDR	Simplified Voyage Data Recorder
TCPA	Time to CPA
TEU	Twenty-foot Equivalent Unit
THD	Total Harmonic Distortion
TMCP	Thermo-Mechanical Controlled Processing
UPS	Uninterruptible Power Supply
VDR	Voyage Data Recorder
VEC	Vapor Emission Control

RULES FOR THE CONSTRUCTION AND CLASSIFICATION OF STEEL SHIPS

PART II
HULL CONSTRUCTION AND EQUIPMENT

CONTENTS

Chapter 1 General 1

1.1 General 1
1.2 Definitions 1
1.3 Submission of Plans 3
1.4 Testing Procedures for Tanks and Boundaries 3
1.5 Materials 8
1.6 Scantlings 11
1.7 Connection of Ends of Stiffeners, Girders and Frames 12
1.8 Brackets 12
1.9 Modification of Span (*l*) for Thicker Brackets 12
1.10 Workmanship 16
1.11 Equipment 16
1.12 Direct Calculations 16
1.13 Structural Details 17

Chapter 2 Stems and Stern Frames 33

2.1 Stems 33
2.2 Stern Frames 33

Chapter 3 Longitudinal Strength 38

3.1 General 38
3.2 Bending Strength 38
3.3 Shearing Strength 41
3.4 Buckling Strength 43
3.5 Loading Manual and Loading Instrument 47

Chapter 4 Single Bottoms 51

4.1 Floors 51

4.2 Center Keelsons 52
4.3 Side Keelsons 53
4.4 Strengthening of Bottom Forward 54
4.5 Pumping and Drainage 54

Chapter 5 Double Bottoms 55

5.1 General 55
5.2 Center Girders 56
5.3 Side Girders and Brackets Inside Tank 57
5.4 Solid Floors 57
5.5 Open Floors 59
5.6 Longitudinal Framing in Double Bottom 60
5.7 Inner Bottoms, Margin and Bottom Plates 62
5.8 Manholes, Lightening Holes, Air and Drainage Holes 64

Chapter 6 Frames 66

6.1 General 66
6.2 Frame Spacing 66
6.3 Transverse Hold Frames 67
6.4 Side Longitudinals and Other Structural Members 73
6.5 Cantilever Beam Systems 75
6.6 Tween Deck Frames 79
6.7 Frames Below Freeboard Deck Forward of Collision Bulkhead 81
6.8 Frames Below Freeboard Deck Abaft of After Peak Bulkhead 81

Chapter 6A Web Frames and Side Stringer 83

6A.1 General 83
6A.2 Web Frames 83
6A.3 Hold Side Stringers 84

Chapter 7 Shell Plating 86

7.1 General 86
7.2 Plate Keels 87
7.3 Shell Plating below the Strength Deck 87
7.4 Special Requirements for Shell Plating 90
7.5 Side Plating in way of Superstructure 92
7.6 Compensation at Ends of Superstructure 92
7.7 Local Compensation of Shell Plating 92
7.8 Openings and Breaks 93

Chapter 8 Strengthening of Bottom Structure Forward **95**

8.1 General 95
8.2 Double Bottom Structure 95
8.3 Scantlings of Longitudinal Shell Stiffeners or Bottom Longitudinals 96

Chapter 9 Beams and Deck Longitudinals **98**

9.1 General 98
9.2 Beams 98
9.3 Deck Longitudinals 99
9.4 End Attachment of Beams and Deck Longitudinals 100

Chapter 10 Deck Girders and Pillars **102**

10.1 General 102
10.2 Deck Girders Clear of Tanks 102
10.3 Deck Transverses 103
10.4 Hatch Side Girders 103
10.5 Hatch End Beams 104
10.6 Pillars 104
10.7 End Attachment of Pillars 105

Chapter 11 Decks **107**

11.1 General 107
11.2 Tapering of Deck Sectional Areas and Deck Transitions 107
11.3 Plated Decks 107
11.4 Compensation at Opening 110
11.5 Thickness of Deck Plating Loaded by Wheeled Vehicles 110
11.6 Higher-strength Material 110

Chapter 12 Superstructures and Deckhouses **112**

12.1 General 112
12.2 Side Plating and Deck of Superstructures 112
12.3 Superstructure End Bulkheads and Deckhouse Walls 112
12.4 Openings in End Bulkheads of Enclosed Superstructures 114
12.5 Aluminum Superstructures and Deckhouses 115

Chapter 12A Helicopter Decks and Facilities **116**

12A.1 General 116

12A.2 Plans 117
12A.3 Structural Strength 117
12A.4 Arrangements 120
12A.5 Additional Requirements for Helideck-II 122
12A.6 Additional Requirements for Helideck-III 122
12A.7 Additional Requirements for Helideck-IV 123

Chapter 13 Bulwarks, Freeing Ports, Side Scuttles, Shell Doors and Gangways 125

13.1 Bulwarks and Guardrails 125
13.2 Freeing Ports 126
13.3 Side Scuttles, Windows and Skylights 129
13.4 Bow Doors and Inner Doors 130
13.5 Side Shell Doors and Stern Doors 138
13.6 Means of Embarkation and Disembarkation 143

Chapter 14 Watertight Bulkheads 145

14.1 General 145
14.2 Construction of Watertight Bulkheads 146
14.3 Watertight Doors 150
14.4 Other Watertight Construction 152

Chapter 15 Non-Watertight Centerline Bulkheads in Cargo Spaces 155

15.1 Construction 155

Chapter 16 Deep Tanks 156

16.1 General 156
16.2 Deep Tank Bulkheads 157
16.3 Fittings of Deep Tanks 160
16.4 Welding of Corrugated Bulkheads 160

Chapter 17 Hatchways, Machinery Space Openings and Other Deck Openings 163

17.1 General 163
17.2 Hatchways 163
17.3 Machinery Space Openings 185
17.4 Companionways and Other Deck Openings 187

Chapter 18 Machinery Casings 193

18.1 General 193
18.2 Construction of Casings 193
18.3 Skylights and Gratings 193

Chapter 19 Machinery Spaces and Tunnels 194

19.1 General 194
19.2 Engine Seatings 194
19.3 Boiler Bearers 195
19.4 Block and Auxiliary Foundations 195
19.5 Tunnels and Tunnel Recesses 195

Chapter 20 Ceiling and Sparring 198

20.1 Ceiling 198
20.2 Sparring 198

Chapter 21 Ventilators, Air and Sounding Pipes 199

21.1 Ventilators 199
21.2 Air and Sounding Pipes 200

Chapter 22 Scuppers and Sanitary Discharges 202

22.1 Scuppers and Sanitary Discharges 202
22.2 Rubbish and Ash Chutes 204
22.3 Materials for Valves and Pipes 204

Chapter 23 Painting 206

23.1 Painting 206
23.2 Cementing 207

Chapter 24 Rudders 208

24.1 General 208
24.2 Rudder Force and Rudder Torque 210
24.3 Rudder Stock 214

24.4 Rudder Plates, Rudder Webs and Rudder Main Pieces 215
24.5 Rudder Stock Couplings 219
24.6 Pintles 224
24.7 Rudder Stock Bearings, Rudder Shaft Bearing and Pintle Bearings 224
24.8 Rudder Carriers 225
24.9 Prevention of Jumping 225
24.10 Rudder Trunk 225
24.11 Guidelines for Calculating of Bending Moment and Shear Force Distribution 227

Chapter 25 Equipment 228

25.1 General 228
25.2 Equipment Number 228
25.3 Anchors 230
25.4 Anchor Cables 231
25.5 Towlines and Mooring Ropes 231
25.6 Arrangements for Working and Stowing of Anchors and Cables 232
25.7 Emergency Towing Arrangements 233
25.8 Emergency Towing Procedures 233
25.9 Towing and Mooring Fittings 234
25.10 Towing and Mooring Arrangements Plan 236
25.11 Anchoring in Deep and Unsheltered Water - ADW 236

Chapter 26 Navigation Bridge Visibility 241

26.1 General 241
26.2 View of the Sea Surface 241
26.3 Blind Sectors 241
26.4 Horizontal Field of Vision 241
26.5 Ship's Side 241
26.6 Bridge Front Windows 241
26.7 Windows 242
26.8 Ships of Unconventional Design 242
26.9 Navigation Bridge Visibility during Ballast Water Exchange 242

Chapter 27 Strength and Securing of Small Hatches, Fore Deck Fittings and Equipment on the Exposed Fore Deck 243

27.1 General 243
27.2 Application 243
27.3 Implementation 243
27.4 Small Hatches 244
27.5 Fore Deck Fittings and Equipment 245

Chapter 28 Means of Access 252

28.1 General Rules 252
28.2 Special Requirements for Oil Tankers and Bulk Carriers 253

Chapter 29 Damage Control for Cargo Ships 260

29.1 Application 260
29.2 Damage Control 260
29.3 Booklet and Plan for Damage Control 260

Chapter 30 Intact Stability 262

30.1 Application 262
30.2 Stability Information 262
30.3 Stability Requirement 263
30.4 Calculation on Stability 263
30.5 General Stability Criteria 263
30.6 Stability Criteria in Wind and Waves 264

Chapter 30A Subdivision and Damage Stability 268

30A.1 General 268

Chapter 31 Ship Recycling 269

31.1 General 269
31.2 Statement on Inventory of Hazardous Materials (the Statement) 270
31.3 Requirement for New Ships 270
31.4 Requirement for Existing Ships 271
31.5 Certification, Maintenance and Survey 273

Chapter 32 Pollution Prevention Notations For Vessels 282

32.1 General 282
32.2 PP Notation 282
32.3 BWM Notation 284
32.4 EEDI and SEEMP Notations 284

Chapter 33 Sloshing 285

33.1 General 285
33.2 Design Loads for Sloshing 285
33.3 Side Structures Subjected to Sloshing 290
33.4 Deck Structures Subjected to Sloshing 293
33.5 Bulkhead Structures Subjected to Sloshing 294
33.6 Design Sloshing Load for Ships with Length less than 100 Meters 299

Chapter 34 Noise and Vibration on Board Ships 306

34.1 General 306
34.2 Noise on Board Ships 307
34.3 Vibration on Board Ships 308

Appendix 1 Guidance on Conditions for Loading Manual 311

A1.1 General 311
A1.2 Guidance on Loading Condition 311

Chapter 1
General

1.1 General

1.1.1 The Rules are framed for ships not less than 90 m in length intended for ocean service and of normal ratio of breadth to depth. Special consideration is to be given to ships of novel design or for special purpose. For ships less than 90 m in length, are to comply with Part XV of the Rules.

1.1.2 The design which is not in direct compliance with the requirements of this Part may be accepted by the Society provided that such design is considered satisfactory and equivalent to the Rules.

1.1.3 The Rules are set forth for all welded constructions. Riveted construction, where used, is to comply with the applicable parts dealing with riveting in the 1972 edition of the Rules.

1.1.4 The section modulus of frames, beams, stiffeners, etc. required by the formula in the Rules is based on sections in conjunction with an effective width of plating as specified in 1.6.3.

1.1.5 Where the flanging of the plates may be considered as a substitute for face plates fitted to web plates, the rounding over of the flanges is to be of the smallest practicable radius and normally the width of the flanges excluding 1.5 times the thickness of the plates is to be considered as effective to obtain the effective area of the flanges.

1.1.6 The midship scantlings as specified in the Rules are to apply throughout the midship 0.4L; the end scantlings are not to extend for more than 0.1L from each end of the ship. The tapering from the midship to the end scantlings is to be effected in as a gradual manner as practicable.

1.1.7 Ships are to be built in accordance with controlled and transparent quality production standards with due regard to intellectual property rights. The ship construction quality procedures are to include, but not be limited to, specifications for material, manufacturing, alignment, assembling, joining and welding procedures, surface preparation and coating. All of the industrial standards employed may be recognized, for example, CNS, ISO, JIS, JSQS, DIN, AWS, IACS Rec.47, etc.

1.2 Definitions

1.2.1 Length of ship (L) is the distance, in meters, on the summer load waterline from the fore side of the stem to the after side of the rudder post, or to the center of the rudder stock if there is no rudder post. L is not to be less than 96 %, and need not be greater than 97 %, of the extreme length on the summer load waterline. The summer load waterline is the designed maximum load line corresponding to the full load condition. In ships without rudder post and stock, L is to be taken equal to 97% of the extreme length on the summer load waterline. In ships with unusual stem or stern arrangements, L is considered on a case by case basis.

1.2.2 Breadth of ship (B) is the horizontal distance, in meters, measured at the broadest part of the hull to the moulded line of the frame in the ship.

1.2.3 Depth of ship (D) is the vertical distance, in meters, at the middle of the length, L, from the top of keel to the top of the uppermost continuous deck beam at side. The depth, D_S, for the determination of the requirements for the shell plating and the strength deck area is measured to the strength deck as defined in 1.2.5 of this Part. When a round gunwale is arranged, the depth, D, is to be measured to the continuation of the molded deck line.

1.2.4 Draught (d) is the vertical distance, in meters, at the middle of the length, L, from the top of keel to the summer load waterline.

1.2.5 Strength deck is the deck that forms the top of the effective hull girder at any part of its length.

1.2.6 Bulkhead deck is the highest deck to which watertight transverse bulkheads except both peak bulkheads extend and are made effective.

1.2.7 Speed of ship (V) is the designed speed, in knots at the maximum continuous rating of the propelling machinery when the ship with clean bottom runs ahead on calm sea at the designed summer load draught.

1.2.8 Block coefficient (C_b) is the coefficient given by dividing the volume of moulded displacement by LBd.

1.2.9 Superstructure is the deck structure on the freeboard deck, extending from side to side of the ship or with the side plating not being inboard of the shell plating more than 4% of the breadth of the ship for freeboard, B_f as specified in 1.2.11 below.

1.2.10 Length of ship for freeboard (L_f) means 96% of the total length on a waterline at 85% of the least moulded depth measured from the top of the keel, or the length from the fore-side of the stem to the axis of the rudder stock on that waterline, if that be greater. Where the stem contour is concave above the waterline at 85% of the least moulded depth, both the forward terminal of the total length and the fore-side of the stem respectively shall be taken at the vertical projection to that waterline of the after most point of the stem contour (above that waterline). In ships designed with a rake of keel the waterline on which this length is measured shall be parallel to the designed waterline.

1.2.11 Breadth of ship for freeboard (B_f) is the maximum horizontal distance in meters, measured at the middle of the length of the ship for freeboard, L_f, to the moulded line of the frame in the ship.

1.2.12 Freeboard deck

(a) Freeboard deck is normally the uppermost continuous deck exposed to weather and sea, which has permanent means of closing all openings in the weather part thereof, and below which all openings in the sides of the ship are fitted with permanent means of watertight closing.

(b) In a ship having a discontinuous freeboard deck, the lowest line of the exposed deck and the continuation of that line parallel to the upper part of the deck is taken as the freeboard deck.

(c) Where the designed load draught is less than derived from the provision of the International Convention on Load Lines, 1966 assuming the existing deck below the freeboard deck as the freeboard deck, the existing lower deck may be designated as the freeboard deck in the application of the Rules, provided it is to be continuous in a fore and aft direction at least between the machinery space and peak bulkheads and continuous athwartships. Where this lower deck is stepped, the lowest line of the deck and the continuation of that line parallel to the upper part of the deck is taken as the freeboard deck.

1.2.13 The midship part of ship is the part 0.4L amidships unless otherwise specified.

1.2.14 The end parts of ship are the parts 0.1L from each end of the ship.

1.2.15 Keel line is a line parallel to the slope of the keel passing amidships through the top of the keel at the centerline or at the line of intersection of the inside of a shell plating with the keel if a bar keel extends below that line, on a ship with a metal shell.

1.2.16 Refer to IACS Rec. 82: Surveyor's Glossary – Hull terms & hull survey terms.

1.3 Submission of Plans

1.3.1 Plans should generally be submitted electronically to the Society via CR Plan Approval System (CRPA). However, hard copies in triplicate will also be accepted. In general, plans covering the following items are to be submitted and approved before the work of construction commences:

(a) Construction plans, as detailed in the respective Chapters of the Rules, such as Midship Section, Longitudinal Section, Decks, Shell Plating, Bottom Construction, Framing, Inner Bottom Plating, Watertight Bulkheads, Structural Non-tight Bulkheads, Deep Tanks, Pillars and Girders, Shaft Tunnels, Bow Construction, Stern Construction, Machinery Casing, Main Engine, Boiler and Main Auxiliary Foundations, Stem, Sternframe, Rudder, Shaft Struts, Spectacle Frames and Bossing, Superstructures and Deck Houses, etc. The proposed scantlings with the necessary particulars for determining the scantlings according to the Rules, the grade of steel to be used, and the arrangement of all parts relevant to the Rules are to be shown on the Plans.

(b) Longitudinal strength calculations including Still Water Bending Moment and Shear Force Calculations and Section Modulus Calculations as required by 3.2 of this Part.

(c) Equipment Calculations as required by 25.2 of this Part.

(d) Plans and Particulars relevant to the Freeboard Assignment, such as Freeboard Calculations, Safety Against Flooding, if any; Doors, Position of Hatchways, Doorways and Ventilators, Cargo and Other Hatchways, Miscellaneous Openings in Freeboard and Superstructure Decks, Ventilators, Air Pipes, Cargo Ports and other Similar Openings, Scuppers, Inlets and Discharges, Side Scuttles, Freeing Ports, Protection of the Crew, Gangway and Access etc.

1.3.2 Any alterations made to the approved plans are subject to approval by the Society before the work with respect to such alterations commences.

1.4 Testing Procedures for Tanks and Boundaries

1.4.1 Reference is made to IACS UR S14 (Rev. 6) for definition of applicable ships. The requirements of testing procedures are divided into two parts, PART A and PART B as follows:

(a) PART A - SOLAS ships (including CSR BC & OT)

(b) PART B - Non-SOLAS ships and SOLAS Exempt/Equivalent ships

1.4.2 Testing procedures of watertight compartments for SOLAS ships (including CSR BC & OT) are to be carried out in accordance with PART A, unless:

(a) the shipyard provides documentary evidence of the shipowner's agreement to a request to the Flag Administration for an exemption from the application of SOLAS Ch. II-1, Reg. 11, or for an equivalency agreeing that the content of PART B is equivalent to SOLAS Ch. II-1, Reg. 11; and

(b) the above-mentioned exemption or equivalency has been granted by the responsible Flag Administration.

1.4.3 Testing procedures of watertight compartments are to be carried out in accordance with PART B for non-SOLAS ships and those SOLAS Exempt/Equivalent ships for which:

(a) the shipyard provides documentary evidence of the shipowner's agreement to a request to the Flag Administration for an exemption from the application of SOLAS Ch. II-1, Reg. 11, or for an equivalency agreeing that the content of PART B is equivalent to SOLAS Ch. II-1, Reg. 11; and

(b) the above-mentioned exemption or equivalency has been granted by the responsible Flag Administration.

1.4.4 Part A – SOLAS ships

(a) General

(i) These test procedures are to confirm the watertightness of tanks and watertight boundaries, and the structural adequacy of tanks which consist of the watertight subdivisions of ships. These procedures may also be applied to verify the weathertightness of structures and shipboard outfitting. The tightness of all tanks and water tight boundaries of ships during new construction and those relevant to major conversions or major repairs is to be confirmed by these test procedures prior to the delivery of the ship.

(ii) Watertight subdivision means the main transverse and longitudinal subdivisions of the ship required to satisfy the subdivision requirements of SOLAS Chapter II-1.

(iii) Major repair means a repair affecting structural integrity.

(iv) Gravity tank means a tank that is subject to vapor pressure not greater than 70 kPa.

(b) Application

(i) All gravity tanks and other boundaries required to be watertight or weathertight are to be tested in accordance with 1.4.4 and proven tight and structurally adequate as follows:

(1) Gravity Tanks for their tightness and structural adequacy,

(2) Watertight Boundaries other than Tank Boundaries for their watertightness, and

(3) Weathertight Boundaries for their weathertightness.

(ii) The testing of cargo containment systems of liquefied gas carriers is to be in accordance with the testing requirements in 4.21 to 4.26 of the IGC Code and standards deemed appropriate by the Society.

(iii) The testing of structures not listed in Table II 1-1 or Table II 1-2 of this Chapter, is to be specially considered.

(c) Test Types Definitions

(i) The following two types of test are specified in this requirement:

(1) Structural Test
A test to verify the structural adequacy of tank construction. This may be a hydrostatic test or, where the situation warrants, a hydropneumatic test.

(2) Leak Test
A test to verify the tightness of a boundary. Unless a specific test is indicated, this may be a hydrostatic / hydropneumatic test or an air test. A hose test may be considered an acceptable form of leak for certain boundaries, as indicated by Note (3) of Table II 1-1 of this Chapter.

(ii) The definition of each test type is as follows:

(1) Hydrostatic Test (Leak and Structural)
A test wherein a space is filled with a liquid to a specified head.

(2) Hydropneumatic Test (Leak and Structural)
A test combining a hydrostatic test and an air test. wherein a space is partially filled with a liquid and pressurized with air.

(3) Hose Test (Leak)
A test to verify the tightness of a joint by a jet of water with the joint visible from the opposite side.

(4) Air Test (Leak)
A test to verify tightness by means of air pressure differential and leak indicating solution. It includes tank air tests and joint air tests, such as compressed air fillet weld tests and vacuum box tests.

(5) Compressed Air Fillet Weld Test (Leak)
An air test of fillet welded tee joint wherein leak indicating solution is applied on fillet welds.

(6) Vacuum Box Test (Leak)
A box over a joint with leak indicating solution applied on the welds. A vacuum is created inside the box to detect any leaks.

(7) Ultrasonic Test (Leak)
A test to verify the tightness of the sealing of closing devices such as hatch covers by means of ultrasonic detection techniques.

(8) Penetration Test (Leak)
A test to verify that no visual dye penetrant indications of potential continuous leakages exist in the boundaries of a compartment by means of low surface tension liquids (i.e. dye penetrant test).

(9) Other test
Other methods of testing may be considered by the Society upon submission of full particulars prior to the commencement of testing.

(d) Test Procedures

(i) General

Tests are to be carried out in the presence of the Surveyor at a stage sufficiently close to the completion of the work with all hatches, doors, windows, etc., installed and all penetrations including pipe connections fitted, and before any ceiling and cement work is applied over the joints. Specific test requirements are given in 1.4.4(d)(iv) and Table II 1-1 of this Chapter. For the timing of the application of coating and the provision of safe access to joints, see 1.4.4(d)(v), 1.4.4(d)(vi) and Table II 1-3 of this Chapter.

(ii) Structural test procedures

(1) Type and time of test
Where a structural test is specified in Table II 1-1 or Table II 1-2 of this Chapter, a hydrostatic test in accordance with 1.4.4(d)(iv)(1) of this Chpater will be acceptable. Where practical limitations (strength of building berth, density of liquid, etc.) prevent the performance of a hydrostatic test, a hydropneumatic test in accordance with 1.4.4(d)(iv)(2) of this Chapter may be accepted instead.
A hydrostatic test or hydropneumatic test for the confirmation of structural adequacy may be carried out while the vessel is afloat, provided the results of a leak test are confirmed to be satisfactory before the vessel is afloat.

(2) Testing Schedule for New Construction or Major Structural Conversion

a) Tanks which are intended to hold liquids, and which form part of the watertight subdivision of the ship* , shall be tested for tightness and structural strength as indicated in Table II 1-1 and Table II 1-2 of this Chapter.

* Watertight subdivision means the main transverse and longitudinal subdivisions of the ship required to satisfy the subdivision requirements of SOLAS Ch. II-1.

b) The tank boundaries are to be tested from at least one side. The tanks for structural test are to be selected so that all representative structural members are tested for the expected tension and compression.

c) The watertight boundaries of spaces other than tanks for structural testing may be exempted, provided that the water-tightness of boundaries of exempted spaces is verified by leak tests and inspections. Structural testing may not be exempted and the requirements for structural testing of tanks in 1.4.4(d)(ii)(2)a) to 1.4.4(d)(ii)(2)b) of this Chapter shall apply, for ballast holds, chain lockers and a representative cargo hold if intended for in-port ballasting.

d) Tanks which do not form part of the watertight subdivision of the ship, may be exempted from structural testing provided that the water-tightness of boundaries of exempted spaces is verified by leak tests and inspections.

(iii) Leak test procedures

(1) For the leak test specified in Table II 1-1, tank air tests, compressed air fillet weld tests, vacuum box tests in accordance with 1.4.4(d)(iv)(4) through 1.4.4(d)(iv)(6) of this Chapter, or their combination, will be acceptable. Hydrostatic or hydropneumatic test may also be accepted as leak tests provided that 1.4.4(d)(v), 1.4.4(d)(vi) and 1.4.4(d)(vii) of this Chapter are complied with. Hose tests will also be acceptable for such locations as specified in Note (3) of Table II 1-1 of this Chapter, in accordance with 1.4.4(d)(iv)(3) of this Chapter.

(2) The application of the leak test for each type of welded joint is specified in Table II 1-3.

(3) Air tests of joints may be carried out in the block stage provided that all work on the block that may affect the tightness of a joint is completed before the test. See also 1.4.4(d)(v)(1) of this Chapter for the application of final coatings and 1.4.4(d)(vi) of this Chapter for the safe access to joints and the summary in Table II 1-3 of this Chapter.

(iv) Test Methods

(1) Hydrostatic Test

Unless other liquid is approved, the hydrostatic tests are to consist of filling the space by fresh water or sea water, whichever is appropriate for testing, to the level specified in Table II 1-1 or Table II 1-2 of this Chapter.

In case a tank is designed for cargo densities greater than sea water and testing is with fresh water or sea water, the testing pressure height is to simulate the actual loading for those greater cargo densities as far as practicable.

All external surfaces of the tested space are to be examined for structural distortion, bulging and buckling, other related damage and leaks.

(2) Hydropneumatic test

Hydropneumatic tests where approved, are to be such that the test condition in conjunction with the approved liquid level and supplemental air pressure will simulate the actual loading as far as practicable. The requirements and recommendations for tank air tests in 1.4.4(d)(iv)(4) of this Chapter will also apply to the hydropneumatic test. See also 1.4.4(d)(vii) of this Chapter.

All external surfaces of the tested space are to be examined for structural distortion, bulging and buckling, other related damage and leaks.

(3) Hose test

Hose tests are to be carried out with the pressure in the hose nozzle maintained at least at 2×10^5 Pa during the test. The nozzle is to have a minimum inside diameter of 12 mm and be at a perpendicular distance from the joint not exceeding 1.5 m. The water jet is to impinge directly upon the weld.

Where a hose test is not practical because of possible damage to machinery, electrical equipment insulation or outfitting items, it may be replaced by a careful visual examination of welded connections, supported where necessary by means such as a dye penetrant test or ultrasonic leak test or the equivalent.

(4) Tank air test

All boundary welds, erection joints and penetrations, including pipe connections are to be examined in accordance with approved procedure and under a stabilized pressure differential above atmospheric pressure not less than 0.15×10^5 Pa, with a leak indicating solution such as soapy water/detergent or a proprietary brand applied.

A U-tube with a height sufficient to hold a head of water corresponding to the required test pressure is to be arranged. The cross sectional area of the U-tube is not to be less than that of the pipe supplying air to the tank. Arrangements involving the use of two calibrated pressure gauges to verify the required test pressure may be accepted taking into account the provisions in F5.1 and F7.4 of IACS Rec. 140, "Recommendation for Safe Precautions during Survey and Testing of Pressurized Systems".

A double inspection is to be made of tested welds. The first is to be immediately upon applying the leak indication solution; the second is to be after approximately 4 or 5 minutes in order to detect those smaller leaks which may take time to appear.

(5) Compressed air fillet weld test
In this air test, compressed air is injected from one end of a fillet welded joint and the pressure verified at the other end of the joint by a pressure gauge on the opposite side. Pressure gauges are to be arranged so that an air pressure of at least 0.15×10^5 Pa can be verified at each end of all passages within the portion being tested.
Note: Where a leak test is required for fabrication involving partial penetration welds, a compressed air test is also to be applied in the same manner as to fillet weld where the root face is large, i.e., 6-8 mm.

(6) Vacuum box test
A box (vacuum testing box) with air connections, gauges and an inspection window is placed over the joint with leak indicating solution applied to the weld cap vicinity. The air within the box is removed by an ejector to create a vacuum of 0.20×10^5 – 0.26×10^5 Pa inside the box.

(7) Ultrasonic test
An ultrasonic echo transmitter is to be arranged inside of a compartment and a receiver is to be arranged on the outside. The watertight/weathertight boundaries of the compartment are scanned with the receiver in order to detect an ultrasonic leak indication. A location where the sound is detectable by the receiver indicates a leakage in the sealing of the compartment.

(8) Penetration test
A test of butt welds or other weld joints uses the application of a low surface tension liquid at one side of a compartment boundary or structural arrangement. If no liquid is detected on the opposite side of the boundaries after the expiration of a defined period of time, this indicates tightness of the boundaries. In certain cases, a developer solution may be painted or sprayed on the other side of the weld to aid leak detection.

(9) Other test
Other methods of testing may be considered by the Society upon submission of full particulars prior to commencement of the testing.

(v) Application of coating

(1) Final coating
For butt joints welded by an automatic process, the final coating may be applied any time before the completion of a leak test of spaces bounded by the joints, provided that the welds have been carefully inspected visually to the satisfaction of the Surveyor. The Surveyor reserves the right to require a leak test prior to the application of the final coating over automatic erection butt welds.
For all other joints, the final coating is to be applied after the completion of the leak test of the joint. See also Table II 1-3 of this Chapter.

(2) Temporary coating
Any temporary coating which may conceal defects or leaks is to be applied at the time as specified for the final coating. This requirement does not apply to shop primer.

(vi) Safe access to joints

For leak tests, a safe access to all joints under examination is to be provided. See also Table II 1-3 of this Chapter.

(vii) Hydrostatic or hydropneumatic tightness test

In cases where the hydrostatic or hydropneumatic tests are applied instead of a specific leak test, examined boundaries must be dew-free, otherwise small leaks are not visible.

1.4.5 PART B – Non-SOLAS Ships and SOLAS Exemption/Equivalent Ships

(a) General

These test procedures are to confirm the watertightness of tanks and watertight boundaries, and the structural adequacy of tanks which consist of the watertight subdivisions of ships. These procedures may also be applied to verify the weathertightness of structures and shipboard outfitting. The tightness of all tanks and water tight boundaries of ships during new construction and those relevant to major conversions or major repairs is to be confirmed by these test procedures prior to the delivery of the ship.

(b) Application

(i) Testing procedures are to be carried out in accordance with the requirements of 1.4.4(d)(ii) to 1.4.4(d)(vii) of this Chapter in association with the following alternative procedures for 1.4.4(d)(ii)(2) "Testing Schedule for New Construction or Major Structural Conversion" and alternative test requirements for Table II 1-1 of this Chapter.

(ii) The tank boundaries are to be tested from at least one side. The tanks for structural test are to be selected so that all representative structural members are tested for the expected tension and compression.

(iii) Structural tests are to be carried out for at least one tank of a group of tanks having structural similarity (i.e. same design conditions, alike structural configurations with only minor localised differences determined to be acceptable by the attending Surveyor) on each vessel provided all other tanks are tested for leaks by an air test. The acceptance of leak testing using an air test instead of a structural test does not apply to cargo space boundaries adjacent to other compartments in tankers and combination carriers or to the boundaries of tanks for segregated cargoes or pollutant cargoes in other types of ships.

(iv) Additional tanks may require structural testing if found necessary after the structural testing of the first tank.

(v) Where the structural adequacy of the tanks of a vessel were verified by the structural testing required in Table II 1-1 of this Chapter, subsequent vessels in the series (i.e. sister ships built from the same plans at the same shipyard) may be exempted from structural testing of tanks, provided that:

(1) Water-tightness of boundaries of all tanks is verified by leak tests and thorough inspections are carried out.

(2) Structural testing is carried out for at least one tank of each type among all tanks of each sister vessel.

(3) Additional tanks may require structural testing if found necessary after the structural testing of the first tank or if deemed necessary by the attending Surveyor.

For cargo space boundaries adjacent to other compartments in tankers and combination carriers or boundaries of tanks for segregated cargoes or pollutant cargoes in other types of ships, the provisions of paragraph 1.4.5(b)(iii) of this Chapter are to apply in lieu of paragraph 1.4.5(b)(v)(2) of this Chapter.

(vi) Sister ships built (i.e. keel laid) 2 years or more after the delivery of the last ship of the series, may be tested in accordance with 1.4.5(b)(v) of this Chapter at the discretion of the Society, provided that:

(1) general workmanship has been maintained (i.e. there has been no discontinuity of shipbuilding or significant changes in the construction methodology or technology at the yard, shipyard personnel are appropriately qualified and demonstrate an adequate level of workmanship as determined by the Society); and

(2) an NDT plan is implemented and evaluated by the Society for the tanks not subject to structural tests. Shipbuilding quality standards for the hull structure during new construction are to be reviewed and agreed during the kick-off meeting. Structural fabrication is to be carried out in accordance with IACS Rec. 47, "Shipbuilding and Repair Quality Standard", or a recognised fabrication standard which has been accepted by the Society prior to the commencement of fabrication/construction. The work is to be carried out in accordance with the Rules and under survey of the Society.

1.4.6 General requirements for testing are given in Table II 1-1 of this Chapter.

1.4.7 Particular requirements for testing of certain spaces within the cargo area of: liquefied gas carriers, edible liquid carriers and chemical carriers are given in Table II 1-2 of this Chapter.

1.5 Materials

1.5.1 The requirements for hull scantling given in this Part are based on the use of mild steel as specified in Part XI.

1.5.2 High strength steel

(a) The material factor K for section modulus for 0.4 L amidship of hull and for other strength calculation is to be as follows:

K = Material factor.
= 1.00 for mild steel.
= 0.78 for HT32.
= 0.72 for HT36.
= 0.68 for HT40.
= 0.66 for HT40 provided that a fatigue assessment of the structure is performed to verify compliance with the requirements of the Society.
= 0.62 for HT47.

Material factor for extra high strength steels are to be specially considered.

(b) For longitudinal strength applicable of higher strength material are to be continuous over the length of the vessel to locations where the stresses levels will be suitable for the adjacent mild steel structure. Higher strength steel is to be extended to suitable locations below the strength deck and above the bottom, so that the stress levels will be satisfactory for the remaining mild steel structure. Longitudinal framing members are to be continuous throughout the required extent of higher strength steel.

(c) For rudder stocks, pintles, flanges, coupling bolts, keys and cast parts of rudders, required scantlings may be reduced with consideration of the following material factor when higher strength steels are used:

$$K = \left(\frac{235}{\sigma_y}\right)^e$$

where:

K = Material factor.
e = 0.75 for $\sigma_y > 235$ N/mm^2.
= 1.00 for $\sigma_y \leq 235$ N/mm^2.
σ_y = Yield stress of material used, in N/mm^2 and is to be taken
$\leq$ $0.7\sigma_t$ or 450 N/mm^2, whichever is smaller.
σ_t = Tensile strength of material, in N/mm^2.

(d) The scantling of local structure such as section modulus, moment of inertia, thickness, sectional area, etc. are to be specially considered by the Society.

1.5.3 Where materials other than those specified in 1.5.1 and 1.5.2 above are used, the use of such materials and the corresponding scantlings are to be specially approved by the Society.

1.5.4 Use of steel grades for ships

(a) Materials in the various strength members are not to be of lower grade than those corresponding to the material classes and grades specified in Table II 1-4 to Table II 1-10. General requirements are given in Table II 1-4, while additional minimum requirements for ships with length exceeding 150 m and 250 m, bulk carriers subject to the requirements of SOLAS regulation XII/6.4.3, and ships with ice strengthening are given in Table II 1-5 to Table II 1-9. The material grade requirements for hull members of each class depending on the thickness are defined in Table II 1-10.

(b) For strength members not mentioned in Table II 1-4 to Table II 1-9, Grade A/AH may generally be used. The steel grade is to correspond to the as-built plate thickness when this is greater than the rule requirement.

(c) Plating materials for stern frames, rudders, rudder horns and shaft brackets are in general not to be of lower grades than corresponding to Class II. For rudder and rudder body plates subjected to stress concentrations (e.g. in way of lower support of semi-spade rudders or at upper part of spade rudders) Class III is to be applied.

1.5.5 Structures exposed to low air temperatures

(a) For ships intended to operate in areas with low air temperatures (below and including -20ºC), e.g. regular service during winter seasons to Arctic or Antarctic waters, the materials in exposed structures are to be selected based on the design temperature t_D, to be taken as defined in 1.5.6.

(b) Materials in the various strength members above the lowest ballast water line (BWL) exposed to air are not to be of lower grades than those corresponding to Classes I, II and III, as given in Table II 1-11 of this Chapter, depending on the categories of structural members (SECONDARY, PRIMARY and SPECIAL). For non-exposed structures (except as indicated in Note (5) of Table II 1-11 of this Chapter) and structures below the lowest ballast water line, see 1.5.4 of this Chapter.

(c) The material grade requirements for hull members of each class depending on thickness and design temperature are defined in Table II 1-12 to Table II 1-14. For design temperatures t_D < -55ºC, materials are to be specially considered by the Society.

(d) Single strakes required to be of Class III or of Grade E/EH or FH are to have breadths not less than 800+ 5L mm, maximum 1800 mm.

(e) Plating materials for stern frames, rudder horns, rudders and shaft brackets are not to be of lower grades than those corresponding to the material classes given in 1.5.4.

1.5.6 The design temperature t_D is to be taken as the lowest mean daily average air temperature in the area of operation. For seasonally restricted service, the lowest value within the period of operation applies. Fig. II 1-1 illustrates the temperature definition.

1.5.7 For the purpose of issuing a Polar Ship Certificate in accordance with the Polar Code, the design temperature t_D shall be no more than 13°C higher than the Polar Service Temperature (PST) of the ship. In the Polar Regions, the statistical mean over observation period is to be determined for a period of at least 10 years.

1.5.8 Cold cargo for ships other than liquefied gas carriers

For ships other than liquefied gas carriers, intended to be loaded with liquid cargo having a temperature below −10°C, e.g. loading from cold onshore storage tanks during winter conditions, the material grade of cargo tank boundary plating is defined in Table II 1-12 to Table II 1-14 based on the following:

(a) t_c = design minimum cargo temperature in °C

(b) steel grade corresponding to Class I as given in Table II 1-12

The design minimum cargo temperature, t_c is to be specified in the loading manual.

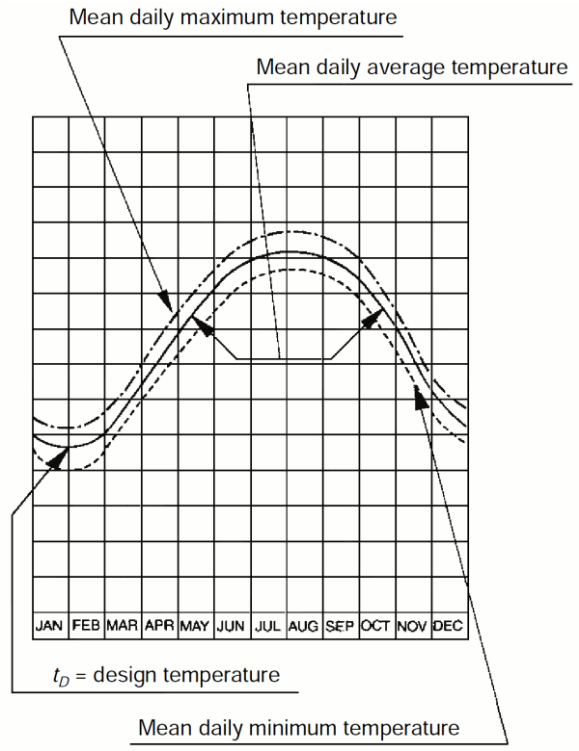

Fig. II 1-1
Commonly Used Definitions of Temperatures

1.6 Scantlings

1.6.1 The midship part and end parts of the ship used when describing the location of structural members and their scantlings are defined in 1.2.13 and 1.2.14 respectively.

1.6.2 Unless specified otherwise, scantlings of structural members of the midship part can be reduced gradually over the length of 0.1L afore and abaft.

1.6.3 Section moduli specified by the Rules include the steel plates with an effective breadth of 0.1*l* on either side of the members, unless specified otherwise. However, the 0.1*l* steel plates are not to exceed one-half of the distance to the next member. *l* is the length of the member specified in the relevant Chapters.

1.6.4 When calculating the section module of longitudinals or longitudinal stiffeners, these values may be properly reduced where these members are effectively supported inside the span defined in the formula.

1.6.5 Where flat bars, angles or flanged plates are welded to form beams, frames or stiffeners for which section moduli are specified, they are to be of suitable depth and thickness in proportion to the section modulus specified in the Rules.

1.6.6 For members such as girders and floors, to which sectional area of face plate is specified, the breadth of the flange is not to be less than that obtained from the following formula, where the inner edge of the web plate is flanged in lieu of a face plate.

$$\frac{100A}{t} + 1.5t \qquad \text{mm}$$

where:
A = Required sectional area, in cm^2, of face plate.
t = Thickness, in mm, of web plate.

1.6.7 Group of stiffeners

Scantlings of stiffeners based on requirements in this Part may be decided based on the concept of grouping designated sequentially placed stiffeners of equal scantlings on a single stiffened panel. The scantling of the group is to be taken as the greater of the following:

- The average of the required scantling of all stiffeners within a group.
- 90% of the maximum scantling required for any one stiffener within the group.

1.7 Connection of Ends of Stiffeners, Girders and Frames

1.7.1 Where the ends of girders are connected to locations such as bulkheads and tank tops, the end connections of all girders are to be balanced by effective supporting members on the opposite side of these locations.

1.7.2 The length of the frame-side arm of brackets connected to the frames or stiffeners of locations such as bulkheads or deep tanks is not to be less than one-eighth of *l* specified in the relevant Chapter, unless otherwise specified.

1.7.3 Where stiffeners support the longitudinals penetrating floors or transverse girders in tanks, the connection of the stiffeners to the longitudinals is to have enough fatigue strength for the dynamic pressure that occurs in such tanks. These stiffeners are to be of a thickness not less than the minimum thickness required for floors or transverse girders and the depth of which is not to be less than 0.08 times the depth of girders or transverse floors, d_0 (in mm), minus the height of the longitudinals. However, stiffeners of an equivalent or greater strength are deemed acceptable.

1.8 Brackets

1.8.1 The size of brackets is to be determined by Table II 1-14 of this Chapter according to the length of the longer arm.

1.8.2 The thickness of brackets is to be suitably increased where the depth of the brackets at the throat is less than two-thirds of the longer arm of the bracket.

1.8.3 Where lightening holes are cut into the brackets, the distance from the circumference of the hole to the free flange of the bracket is not to be less than the diameter of the lightening hole.

1.8.4 Where the length of the longer arm exceeds 800 mm, the free edges of the brackets are to be stiffened by flanging or by other means, except where tripping brackets or the like are provided.

1.9 Modification of Span (*l*) for Thicker Brackets

1.9.1 Span (*l*) for thicker brackets

Where brackets are not thinner than the girder plates, the value of *l* specified in this Part may be modified in accordance with the following:

(a) Where the sectional area of the face plate of the bracket is not less than one-half that of the girder and the face plate of the girder which is carried on to the bulkhead, deck, tank top, etc., *l* may be measured to a point 0.15m inside the toe of the bracket.

(b) Where the sectional area of the face plate of the bracket is less than one-half that of the girder and the face plate of the girder which is carried on to the bulkhead, deck, tank top, etc., *l* may be measured to a point where the sum of sectional areas of the bracket and its face plate outside the line of the girder is equal to the sectional area of the face plate of girder, or to a point 0.15m inside the toe of the bracket, whichever is greater.

(c) Where brackets are provided and the face plates of girders extend along the free edge of brackets to the bulkhead, deck, tank top, etc., even if the free edge of brackets is curved, *l* is to be measured to the toe of the bracket.

(d) Brackets are not to be considered effective beyond the point where the arm along the girder is 1.5 times the length of the arm on the bulkhead, deck, tank top, etc.

(e) In no case is the allowance in *l* at either end to exceed one-quarter of the overall length of the girder including the part of end connection.

1.9.2 Effective bending span (l_e) of stiffeners

The effective bending span (l_e) of stiffeners is to be measured as shown in Fig. II 1-2 for single skin structures and Fig. II 1-3 for double skin structures.

If the web stiffener is sniped at the end or not attached to the stiffener under consideration, the effective bending span is to be taken as the full length between primary supporting members unless a backing bracket is fitted, see Fig. II 1-2.

The effective bending span may be reduced where brackets are fitted to the flange or free edge of the stiffener. Brackets fitted on the side opposite to that of the stiffener with respect to attached plating are not to be considered as effective in reducing the effective bending span.

In single skin structures, the effective bending span of a stiffener supported by a bracket or by a web stiffener on one side only of the primary supporting member web, is to be taken as the total span between primary supporting members as shown in item (a) of Fig. II 1-2. If brackets are fitted on both sides of the primary supporting member, the effective bending span is to be taken as in items (b), (c) and (d) of Fig. II 1-2.

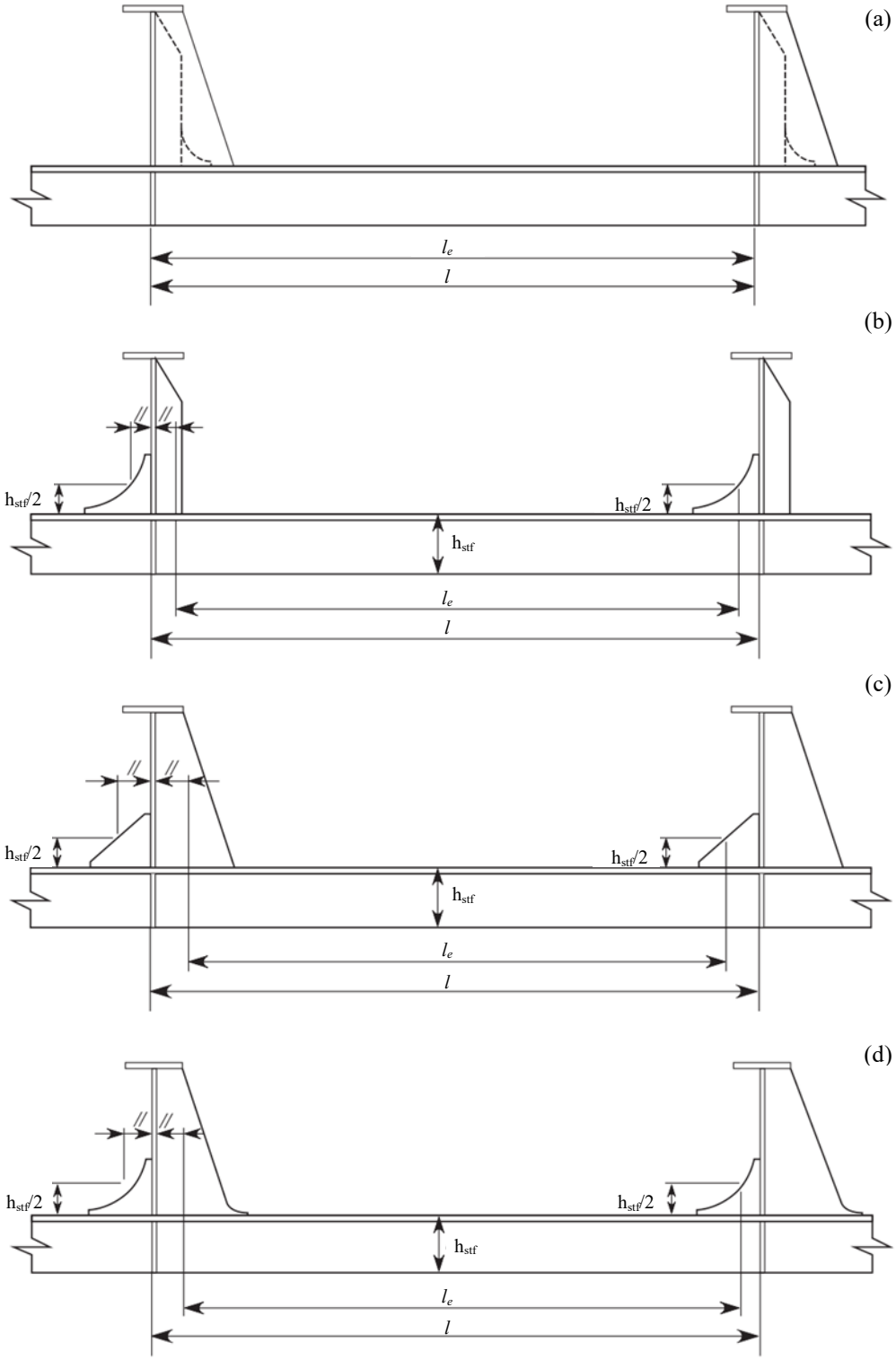

Fig. II 1-2
Effective Bending Span of Stiffeners Supported by Web Stiffeners (Single Skin Construction)

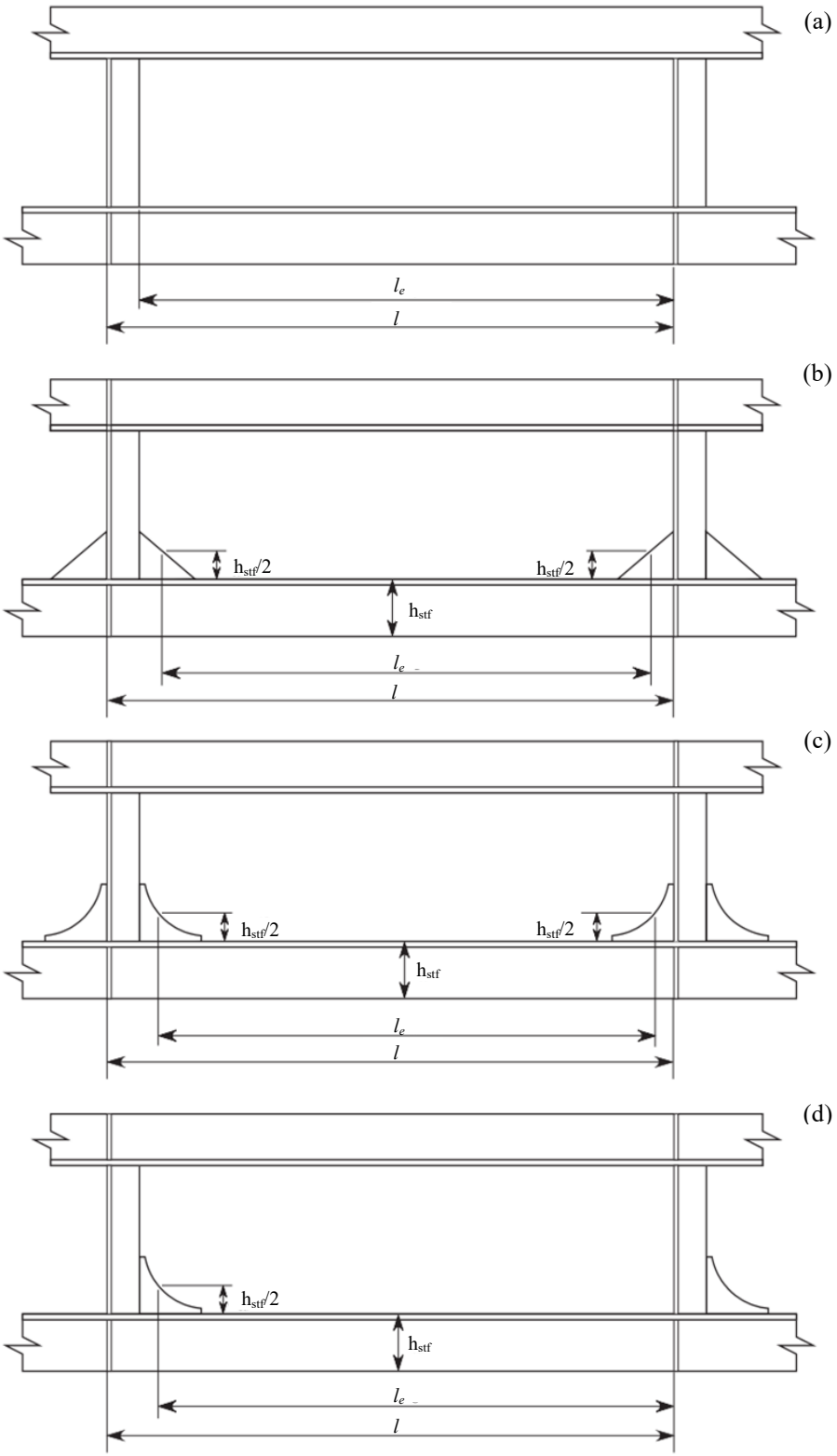

Note: Where the face plate of the stiffener is continuous along the edge of the bracket, the effective bending span is to be taken to the position where the depth of the bracket is equal to one quarter of the depth of the stiffener, see Fig. II 1-4.

Fig. II 1-3
Effective Bending Span of Stiffeners Supported by Web Stiffeners (Double Skin Construction)

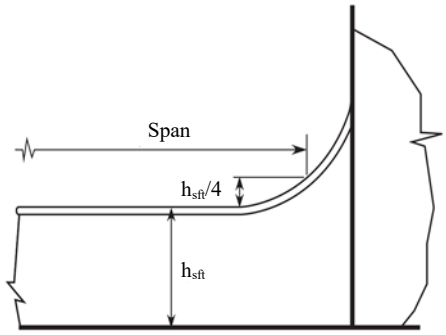

Fig. II 1-4
Effective Bending Span for Local Support Members with Continuous Face Plate along Bracket Edge

1.10 Workmanship

1.10.1 The workmanship is to be of the best quality. During construction, the builder is to supervise and inspect every job in detail performed in the shed and yard.

1.10.2 The connection of structural parts of the hull is to be fair and sound.

1.10.3 The edges of steel plates are to be accurate and fair.

1.10.4 The flanging inner radius is not to be less than two times but not greater than 3 times the thickness of plate.

1.10.5 Where frames or beams pass through watertight decks or bulkheads, the deck or bulkhead is to be constructed watertight without using wooden materials or cement.

1.10.6 The details of welded joints and their workmanship are to be as specified in Part XII.

1.11 Equipment

1.11.1 Masts and riggings, cargo handling, mooring and anchoring arrangements and other fittings for which there are no particular requirements in this Part are to be of appropriate construction and arrangement suitable for their respective purposes. Where deemed necessary, tests are to be carried out to the satisfaction of the Surveyor.

1.12 Direct Calculations

1.12.1 Where approved by the Society, direct calculations may be used to determine the scantlings of primary members. Where direct calculations are used, the data necessary for the calculations are to be submitted to the Society including but not limited to as follows:

(a) The direct calculation procedures are to be agreed by the Society.

(b) The technical program(s) used.

(c) A description of the structural modelling.

(d) A summary of analysis parameters including properties and boundary conditions.

(e) Details of the loading conditions and the means of applying loads.

(f) A comprehensive summary of calculation results. Sample calculations should be submitted where appropriate.

In general, submission of large volumes of input and output data associated with such programs as finite element analysis will not be necessary.

1.12.2 Where deemed necessary by the Society based on factors such as the type and size of the ship, the scantlings of primary members are to be determined by the direct strength analysis.

1.13 Structural Details

1.13.1 Continuity and alignment

(a) The arrangement of material is to be such as will ensure structural continuity. Abrupt changes of shape or section, sharp corners and points of stress concentration are to be avoided.

(b) Where members abut on both sides of a bulkhead or similar structure, care is to be taken to ensure good alignment.

(c) Pillars and pillar bulkheads are to be fitted in the same vertical line wherever possible, and elsewhere arrangements are to be made to transmit the out of line forces satisfactorily. The load at head and heel of pillars is to be effectively distributed and arrangements are to be made to ensure the adequacy and lateral stability of the supporting members.

(d) Continuity is to be maintained where primary members intersect and where the members are of the same depth, a suitable gusset plate is to be fitted.

(e) End connections of structural members are to provide adequate end fixity and effective distribution of the load into the supporting structure.

(f) The toes of brackets, etc. should not land on unstiffened panels of plating. Special care should be taken to avoid notch effects at the toes of brackets, by making the toe concave or otherwise tapering it off.

(g) Where primary and/or secondary members are constructed of higher tensile steel, particular attention is to be paid to the design of the end bracket toes in order to minimise stress concentrations. Sniped face plates which are welded onto the edge of primary member brackets are to be carried well around the radiused bracket toe and are to incorporate a taper not greater than 30º. Where sniped face plates are welded adjacent to the edge of primary member brackets, adequate cross sectional area is to be provided through the bracket toe at the end of the snipe. In general, this area measured perpendicular to the face plate, is to be not less than 60% of the full cross-sectional area of the face plate, see Fig. II 1-5 as below.

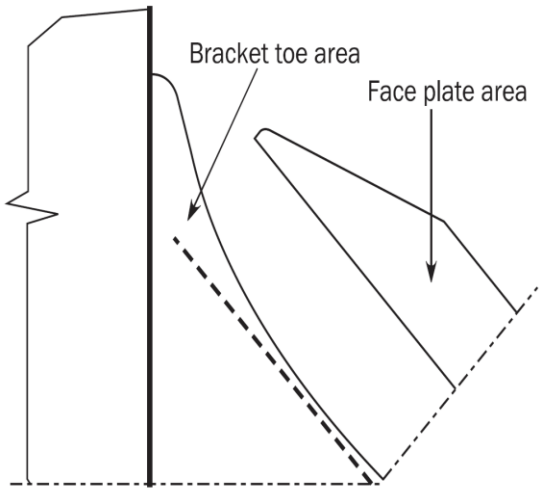

Fig. II 1-5
Bracket Toe Construction

1.13.2 Arrangements at intersections of continuous secondary and primary members

(a) Cut-outs for the passage of secondary members through the web of primary members, and the related collaring arrangements, are to be designed to minimise stress concentrations around the perimeter of the opening and in the attached hull envelope or bulkhead plating. The critical shear buckling stress of the panel in which the cut-out is made is to be investigated. Cut-outs for longitudinals are to be fitted with full collar plates in areas of high stress, e.g. in way of cross tie ends and floors under bulkhead stools in ore and ballast holds.

(b) Cut-outs are to have smooth edges, and the corner radii are to be as large as practicable, with a minimum of 20% of the breadth of the cut-out or 25 mm, whichever is the greater. It is recommended that the web plate connection to the hull envelope or bulkhead should end in a smooth tapered "soft toe". Recommended shapes of cut-out are shown in Fig. II 1-6 of this Chapter, but consideration will be given to other shapes on the basis of maintaining equivalent strength and minimizing stress concentration. Consideration is to be given to the provision of adequate drainage and unimpeded flow of air and water when designing the cut-outs and connection details.

(c) Asymmetrical secondary members are to be connected on the heel side to the primary member web plate. Additional connection by collars on the opposite side may be required.

(d) Symmetrical secondary members are to be connected by collars on one or both sides, as necessary.

(e) The cross-sectional areas of the connections are to be determined from the proportion of load transmitted through each component in association with its appropriate permissible stress.

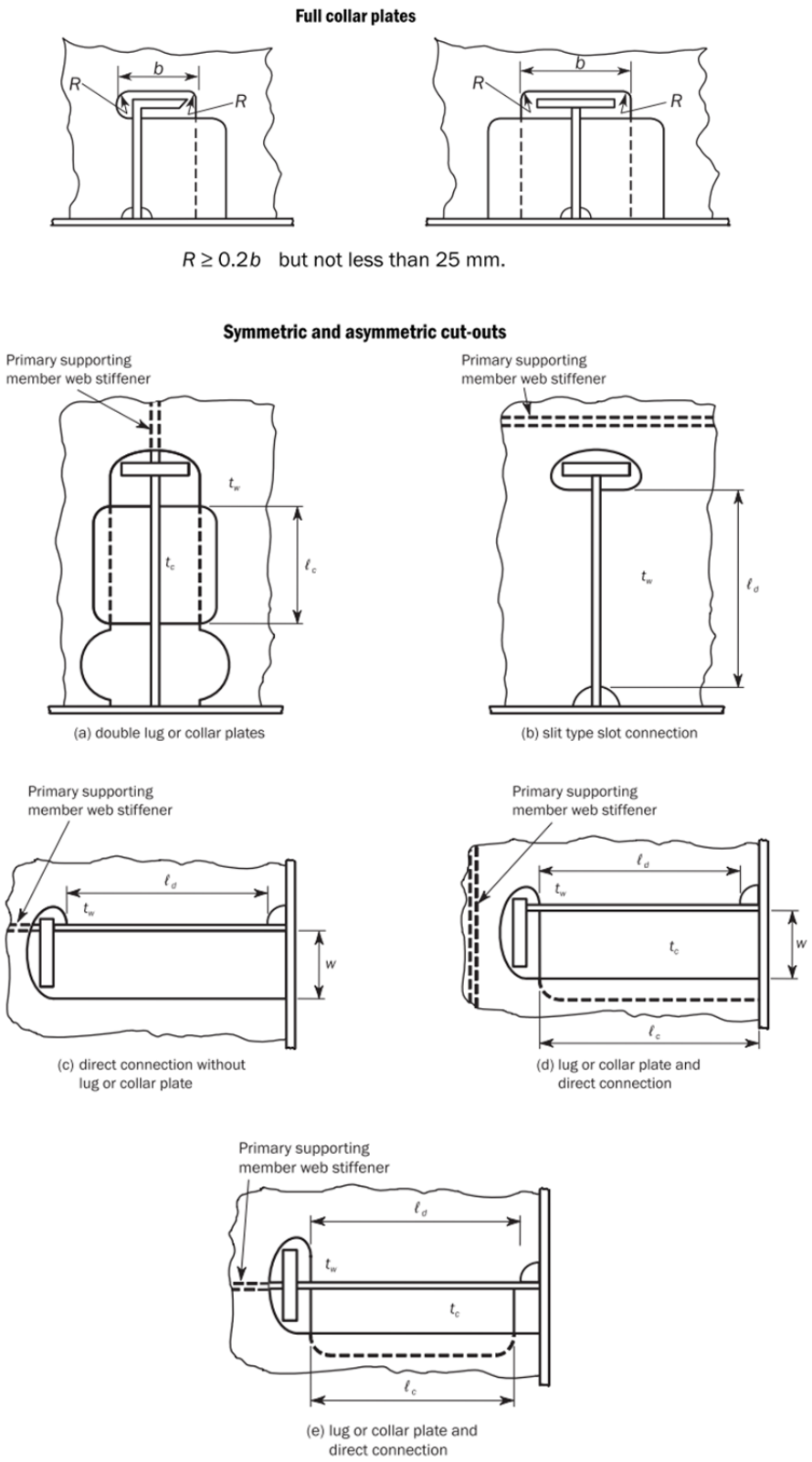

Fig. II 1-6
Cut-Outs and Connections

1.13.3 Openings

(a) Manholes, lightening holes and other cut-outs are to be avoided in way of concentrated loads and areas of high shear. In particular, manholes and similar openings are not to be cut in vertical or horizontal diaphragm plates in narrow cofferdams or double plate bulkheads within one-third of their length from either end, nor in floors or double bottom girders close to their span ends, or below the heels of pillars, unless the stresses in the plating and the panel buckling characteristics have been calculated and found satisfactory.

(b) Manholes, lightening holes and other openings are to be suitably framed and stiffened where necessary.

(c) Air and drain holes, notches and scallops are to be kept at least 200 mm clear of the toes of end brackets and other areas of high stress, see Fig. II 1-7 as below. Openings are to be well rounded with smooth edges. Details of scalloped construction are shown in Fig. II 1-7 as below. Closely spaced scallops are not permitted in higher tensile steel members. Widely spaced air or drain holes may be accepted, provided that they are of elliptical shape, or equivalent, to minimise stress concentration and are, in general, cut clear of the weld connection.

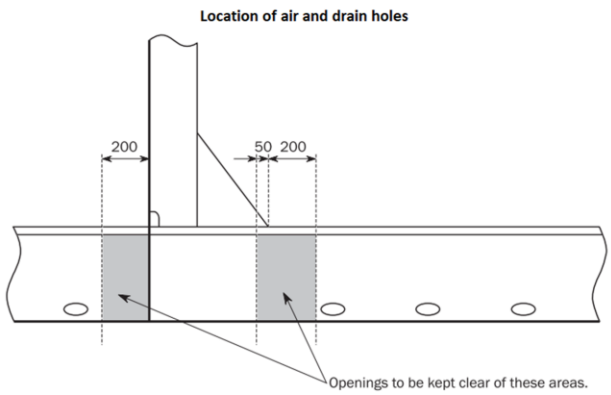

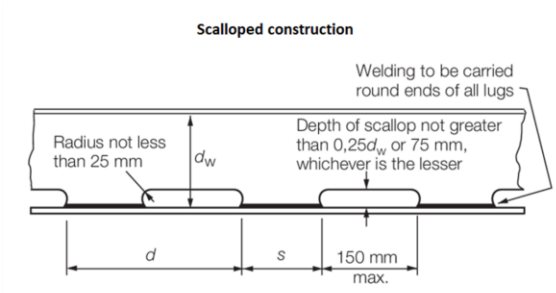

Fig. II 1-7
Air Hole, Drain Holes and Scallop

1.13.4 Sheerstrake and bulwarks

(a) Where an angled gunwale is fitted, the top edge of the sheerstrake is to be kept free of all notches and isolated welded fittings. Fixtures of deck fittings such as bulwarks and eye plates are not to be welded to the top of the sheerstrake except within 0.1 L from A.P. and F.P. Drainage openings with a smooth transition in the longitudinal direction may be permitted. The design of the fittings shall be such as to minimise stress concentrations, with a smooth transition towards deck level. For ships with low/moderate hull girder stress, such details will be considered on a case-by-case basis.

(b) Where a rounded gunwale is adopted, the welding of fairlead stools and other fittings to this plate is to be kept to the minimum, and the design of the fittings is to be such as to minimise stress concentration.

(c) Arrangements are to ensure a smooth transition from rounded gunwale to angled gunwale towards the ends of the ship.

(d) At the ends of superstructures where the side plating is extended and tapered to align with the bulwark plating, the transition plating is to be suitably stiffened and supported. Where freeing ports or other openings are essential in this plate, they are to be suitably framed and kept well clear of the free edge.

1.13.5 Fittings and attachments, general

The quality of welding and general workmanship of fittings and attachments are to be equivalent to that of the main hull structure. Visual examination of all welds is to be supplemented by non-destructive testing as considered necessary by the Surveyor.

1.13.6 Bilge keels and ground bars

(a) It is recommended that bilge keels should not be fitted in the forward 0.3L region on ships intended to navigate in severe ice conditions.

(b) Bilge keels are to be attached to a continuous ground bar as shown in Fig. II 1-8 of this Chapter. Butt welds in shell plating, ground bar and bilge keels are to be staggered.

(c) The minimum thickness of the ground bar is to be equal to the thickness of the bilge strake or 14 mm, whichever is the lesser.

(d) The material of the bilge keel and ground bar is to be of the same yield stress as the material to which they are attached. In addition, when the bilge keel extends over a length more than 0.15 L, the material of the bilge keel and ground bar is to be of the same grade as the material to which they are attached.

(e) The ground bar is to be connected to the shell with a continuous fillet weld and the bilge keel to the ground bar with a light continuous fillet weld.

(f) Direct connection between ground bar butt welds and shell plating, and between bilge keel butt welds and ground bar is to be avoided.

(g) The design of single web bilge keels is to ensure that failure to the web occurs before failure of the ground bar. In general, this may be achieved by ensuring the web thickness of bilge keels does not exceed that of the ground bar.

(h) The end details of bilge keels and intermittent bilge keels, where adopted, are to be as shown in Fig. II 1-9 of this Chapter.

(i) The ground bar and bilge keel ends are to be tapered or rounded. Where the ends are tapered, the tapers are to be gradual with ratios of at least 3:1, see Fig. II 1-9 of this Chapter. Where the ends are rounded, details are to be as shown in Fig. II 1-9 of this Chapter. Cut-outs on the bilge keel web within zone 'A' (see Fig. II 1-9 of this Chapter) are not permitted.

(j) The end of the bilge keel web is to be between 50 mm and 100 mm from the end of the ground bar, see Fig. II 1-9 of this Chapter.

(k) An internal transverse support is to be positioned as close as possible to halfway between the end of the bilge keel web and the end of the ground bar, see Fig. II 1-9 of this Chapter.

(l) Where an internal longitudinal stiffener is fitted in line with the bilge keel web, the longitudinal stiffener is to extend to at least the nearest transverse member outside zone 'A', see Fig. II 1-9 of this Chapter. In this case, the requirement of (j) above does not apply.

(m) Holes are to be drilled in the bilge keel butt welds. The size and position of these holes are to be as illustrated in Fig. II 1-8 of this Chapter. Where the butt weld has been subject to non-destructive examination the stop hole may be omitted.

(n) Bilge keels of a different design from that shown in Fig. II 1-8 and Fig. II 1-9 of this Chapter will be specially considered.

(o) A plan of the bilge keels is to be submitted for approval of material grades, welded connections and detail design.

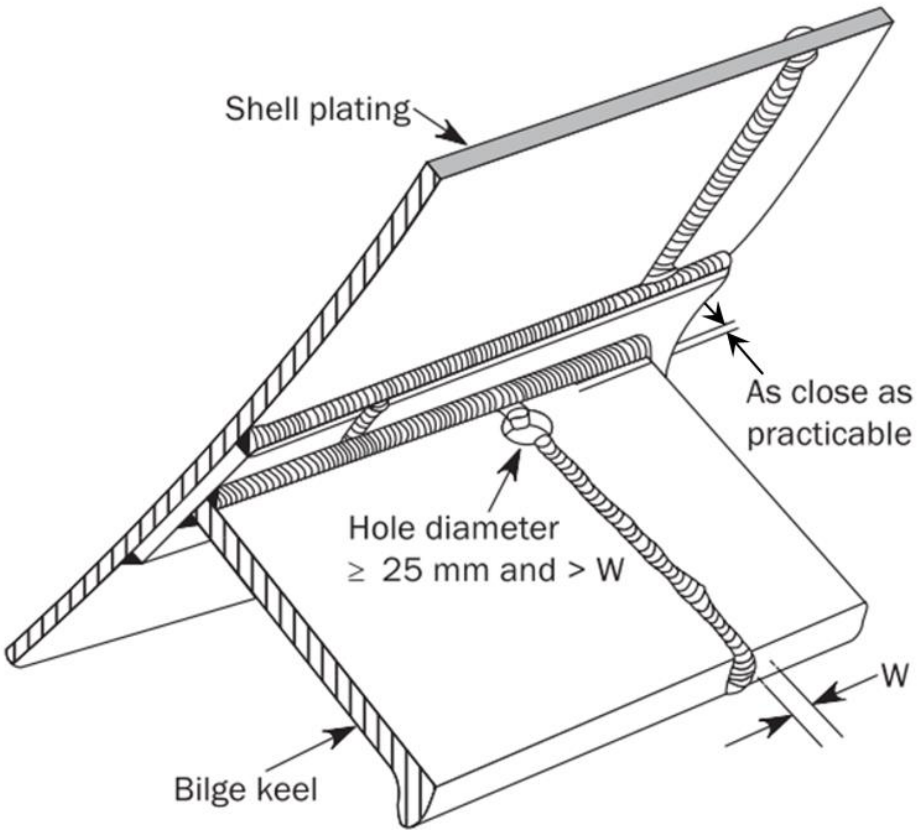

Fig. II 1-8
Bilge Keel Construction

1.13.7 Other fittings and attachments

(a) Gutterway bars at the upper deck are to be so arranged that the effect of main hull stresses on them is minimised.

(b) Minor attachments, such as pipe clips, staging lugs and supports, are generally to be kept clear of toes of end brackets, corners of openings and similar areas of high stress. Where connected to asymmetrical stiffeners, the attachments may be in line with the web providing the fillet weld leg length is clear of the offset face plate or flange edge. Where this cannot be achieved the attachments are to be connected to the web, and in the case of flanged stiffeners they are to be kept at least 25 mm clear of the flange edge. On symmetrical stiffeners, they may be connected to the web or to the centreline of the face plate in line with the web.

(c) Where necessary in the construction of the ship, lifting lugs may be welded to the hull plating but they are not to be slotted through. Where they are subsequently removed, this is to be done by flame or mechanical cutting close to the plate surface, and the remaining material and welding ground off. After removal the area is to be carefully examined to ensure freedom from cracks or other defects in the plate surface.

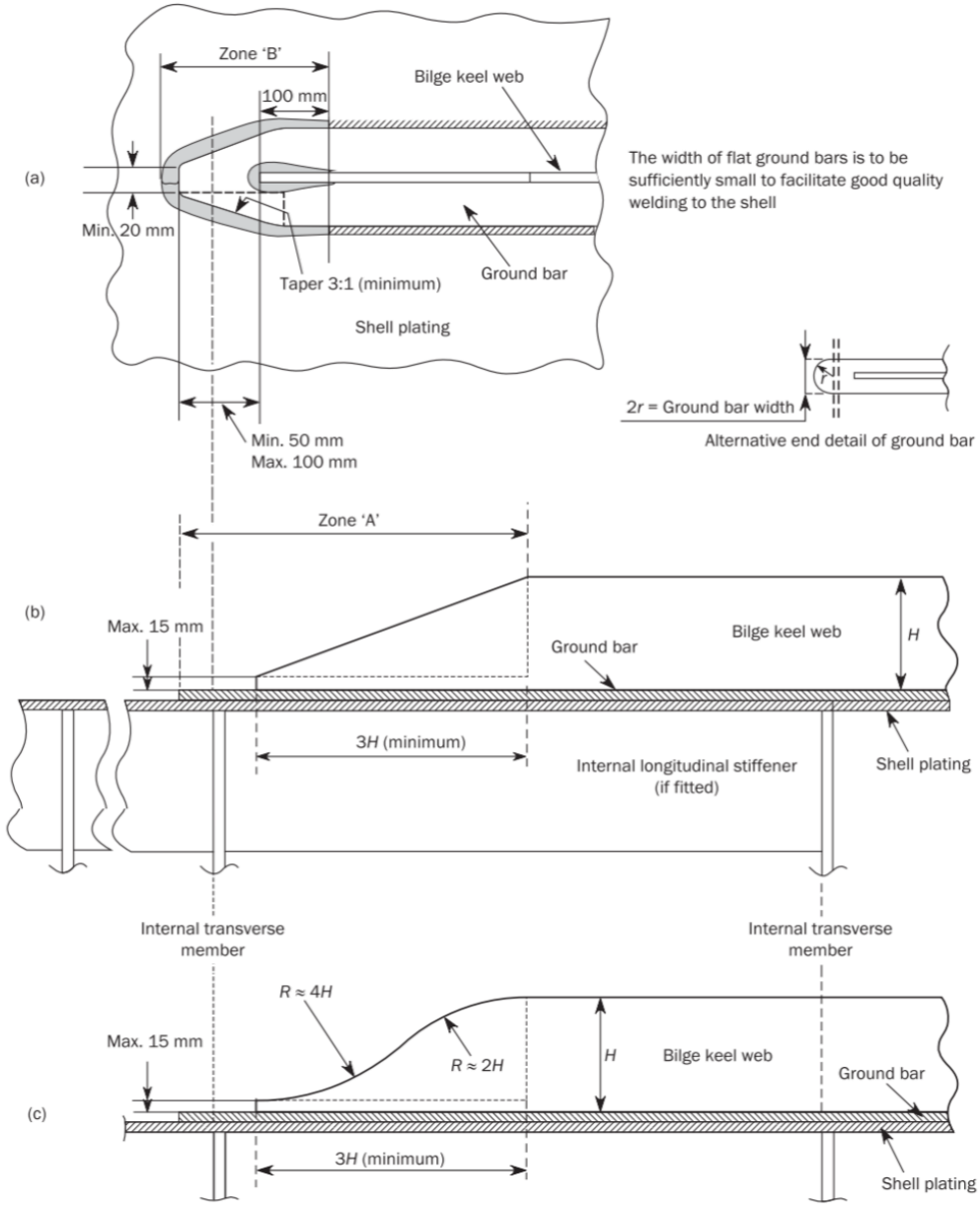

Fig. II 1-9
Bilge Keel End Design

Table II 1-1
Test Requirements for Tanks and Boundaries

Item No.	Tank or boundary to be tested	Test type	Test head or pressure	Remarks
1	Double bottom tanks(4)	Leak and structural (1)	The greater of - top of the overflow, - to 2.4 m above top of tank(2), or - to bulkhead deck	
2	Double bottom voids(5)	Leak	See 1.4.4(d)(iv)(4) through 1.4.4(d)(iv)(6) of this Part, as applicable	including pump room double bottom and bunker tank protection double hull required by MARPOL Annex I
3	Double side tanks	Leak and structural(1)	The greater of - top of the overflow, - to 2.4m above top of tank(2), or - to bulkhead deck	
4	Double side voids	Leak	See 1.4.4(d)(iv)(4) through 1.4.4(d)(iv)(6) of this Part, as applicable	
5	Deep tanks other than those listed elsewhere in this table	Leak and structural(1)	The greater of - top of the overflow, or - to 2.4m above top of tank(2)	
6	Cargo oil tanks	Leak and structural(1)	The greater of - top of the overflow, - to 2.4m above top of tank(2), or - to top of tank(2) plus setting of any pressure relief valve	
7	Ballast hold of bulk carriers	Leak and structural(1)	Top of cargo hatch coaming	
8	Peak tanks	Leak and structural(1)	The greater of - top of the overflow, or - to 2.4m above top of tank(2)	After peak to be tested after installation of stern tube
9	Fore peak spaces with equipment	Leak	See 1.4.4(d)(iv)(3) through 1.4.4(d)(iv)(6) of this Part, as applicable.	
	Fore peak voids	Leak	See 1.4.4(d)(iv)(4) through 1.4.4(d)(iv)(6) of this Part, as applicable	
	Aft peak spaces with equipment	Leak	See 1.4.4(d)(iv)(3) through 1.4.4(d)(iv)(6) of this Part, as applicable	
	Aft peak voids	Leak	See 1.4.4(d)(iv)(4) through 1.4.4(d)(iv)(6) of this Part, as applicable	After peak to be tested after installation of stern tube
10	Cofferdams	Leak	See 1.4.4(d)(iv)(4) through 1.4.4(d)(iv)(6) of this Part, as applicable	
11	Watertight bulkheads	Leak (8)	See 1.4.4(d)(iv)(3) through 1.4.4(d)(iv)(6) of this Part, as applicable(7)	
	Superstructure end bulkhead	Leak	See 1.4.4(d)(iv)(3) through 1.4.4(d)(iv)(6) of this Part, as applicable	

Item No.	Tank or boundary to be tested	Test type	Test head or pressure	Remarks
12	Watertight doors below freeboard or bulkhead deck	Leak(6), (7)	See 1.4.4(d)(iv)(3) through 1.4.4(d)(iv)(6) of this Part, as applicable	
13	Double plate rudder blade	Leak	See 1.4.4(d)(iv)(4) through 1.4.4(d)(iv)(6) of this Part, as applicable	
14	Shaft tunnel clear of deep tanks	Leak(3)	See 1.4.4(d)(iv)(3) through 1.4.4(d)(iv)(6) of this Part, as applicable	
15	Shell doors	Leak(3)	See 1.4.4(d)(iv)(3) through 1.4.4(d)(iv)(6) of this Part, as applicable	
16	Weathertight hatch covers and closing appliances	Leak(3), (7)	See 1.4.4(d)(iv)(3) through 1.4.4(d)(iv)(6) of this Part, as applicable	Hatch covers closed by tarpaulins and battens excluded
17	Dual purpose tank/dry cargo hatch cover	Leak(3), (7)	See 1.4.4(d)(iv)(3) through 1.4.4(d)(iv)(6) of this Part, as applicable	In addition to structural test in item 6 or 7 of this table
18	Chain locker	Leak and structural(1)	Top of chain pipe	
19	L.O. sump. tanks and other similar tanks/spaces under main engines	Leak(9)	See 1.4.4(d)(iv)(3) through 1.4.4(d)(iv)(6) of this Part, as applicable	
20	Ballast ducts	Leak and structural(1)	The greater of - ballast pump maximum pressure, or - setting of any pressure relief valve	
21	Fuel Oil Tanks	Leak and structural(1)	The greater of - top of the overflow, - to 2.4m above top of tank(2), or - to top of tank(2) plus setting of any pressure relief valves, or - to bulkhead deck	

Note:

(1) Refer to 1.4.4(d)(ii)(2) of this Part.

(2) The top of a tank is the deck forming the top of the tank excluding any hatchways.

(3) Hose Test may also be considered as a medium of the test. See 1.4.4(c)(ii) of this Part.

(4) Including tanks arranged in accordance with the provisions of SOLAS regulation II-1/9.4.

(5) Including duct keels and dry compartments arranged in accordance with the provisions of SOLAS II-1/11.2 and II-1/9.4 respectively, and/or oil fuel tank protection and pump room bottom protection arranged in accordance with the provisions of MARPOL Annex I, Chapter 3, Part A regulation 12A and Chapter 4, Part A, regulation 22 respectively.

(6) Where water tightness of watertight door has not been confirmed by prototype test, testing by filling watertight spaces with water is to be carried out. See SOLAS regulation II-1/16.2 and MSC/Circ.1176.

(7) As an alternative to the hose testing, other testing methods listed in 1.4.4(d)(iv)(7) through 1.4.4(d)(iv)(9) of this Part may be applicable subject to adequacy of such testing methods being verified. See SOLAS regulation II-1/11.1. For watertight bulkheads (item 11.1) alternatives to the hose testing may only be used where a hose test is not practicable.

(8) A "Leak and structural test", see 1.4.4(d)(ii)(2) of this Part is to be carried out for a representative cargo hold if intended for in-port ballasting. The filling level requirement for testing cargo holds intended for in-port ballasting is to be the maximum loading that will occur in-port as indicated in the loading manual.

(9) Where L.O. sump tanks and other similar spaces under main engines intended to hold liquid form part of the watertight subdivision of the ship, they are to be tested as per the requirements of Item 5, Deep tanks other than those listed elsewhere in this table.

Table II 1-2
Additional Test Requirements for Special Service Ships/Tanks

Item No.	Type of Ship/Tank	Structures to be tested	Type of Test	Test Head or Pressure	Remarks
1	Liquefied gas carriers	Integral tanks	Leak and structural	Refer to IACS UR G1	
		Hull structure supporting membrane or semi-membrane tanks	Refer to IACS UR G1	Refer to IACS UR G1	
		Independent tanks type A	Refer to IACS UR G1	Refer to IACS UR G1	
		Independent tanks type B	Refer to IACS UR G1	Refer to IACS UR G1	
		Independent tanks type C	Refer to IACS UR G2	Refer to IACS UR G2	
2	Edible liquid carriers	Independent tanks	Leak and structural(1)	The greater of - top of the overflow, or - to 0.9m above top of tank(2)	
3	Chemical carriers	Integral or independent cargo tanks	Leak and structural(1)	The greater of - to 2.4m above top of tank(2), or - to top of tank(2) plus setting of any pressure relief valve	Where a cargo tank is designed for the carriage of cargoes with specific gravities larger than 1.0, an appropriate additional head is to be considered

Note:
(1) Refer to 1.4.4(d)(ii)(2) of this Part.
(2) Top of tank is deck forming the top of the tank excluding any hatchways.

Table II 1-3
Application of Leak Test, Coating and Provision of Safe Access for Type of Welded Joints

Type of welded joints		Leak test	Coating(1)		Safe Access(2)	
			Before leak test	After leak test but before structural test	Leak test	Structural test
Butt	Automatic	Not required	Allowed(3)	N/A	Not required	Not required
	Manual or Semi-automatic(4)	Required	Not allowed	Allowed	Required	Not required
Fillet	Boundary including penetrations	Required	Not allowed	Allowed	Required	Not required

Note:

(1) Coating refers to internal (tank/hold coating), where applied, and external (shell/deck) painting. It does not refer to shop primer.

(2) Temporary means of access for verification of the leak test.

(3) The condition applies provided that the welds have been carefully inspected visually to the satisfaction of the Surveyor.

(4) Flux Core Arc Welding (FCAW) semiautomatic butt welds need not be tested provided that careful visual inspections show continuous uniform weld profile shape, free from repairs, and the results of NDE testing show no significant defects.

Table II 1-4
Material Classes and Grades for Ships in General

Structural member category	Material class/grade
SECONDARY: A1. Longitudinal bulkhead strakes, other than that belonging to the Primary category A2. Deck plating exposed to weather, other than that belonging to the Primary or Special category A3. Side plating	- Class I within 0.4L amidships - Grade A/AH outside 0.4L amidships
PRIMARY: B1. Bottom plating, including keel plate B2. Strength deck plating, excluding that belonging to the Special category B3. Continuous longitudinal members above strength deck, excluding hatch coamings B4. Uppermost strake in longitudinal bulkhead B5. Vertical strake (hatch side girder) and uppermost sloped strake in top wing tank	- Class II within 0.4L amidships - Grade A/AH outside 0.4L amidships
SPECIAL: C1. Sheer strake at strength deck(1) C2. Stringer plate in strength deck(1) C3. Deck strake at longitudinal bulkhead, excluding deck plating in way of inner-skin bulkhead of double-hull ships(1)	- Class III within 0.4L amidships - Class II outside 0.4L amidships - Class I outside 0.6L amidships
C4. Strength deck plating at outboard corners of cargo hatch openings in container carriers and other ships with similar hatch opening configurations	- Class III within 0.4L amidships - Class II outside 0.4L amidships - Class I outside 0.6L amidships - Min. Class III within cargo region
C5. Strength deck plating at corners of cargo hatch openings in bulk carriers, ore carriers combination carriers and other ships with similar hatch opening configurations	- Class III within 0.6L amidships - Class II within rest of cargo region
C6. Bilge strake in ships with double bottom over the full breadth and length less than 150 m(1)	- Class II within 0.6L amidships - Class I outside 0.6L amidships
C7. Bilge strake in other ships(1)	- Class III within 0.4L amidships - Class II outside 0.4L amidships - Class I outside 0.6L amidships
C8. Longitudinal hatch coamings of length greater than 0.15L C9. End brackets and deck house transition of longitudinal cargo hatch coamings	- Class III within 0.4L amidships - Class II outside 0.4L amidships - Class I outside 0.6L amidships - Not to be less than Grade D/DH

(1) Single strakes required to be of Class III within 0.4L amidships are to have breadths not less than 800+5L (mm), need not be greater than 1800 (mm), unless limited by the geometry of the ship's design.

Table II 1-5
Minimum Material Grades for Ships with Length Exceeding 150 m and Single Strength Deck

Structural member category	Material grade
Longitudinal strength members of strength deck plating	Grade B/AH within 0.4L amidships
Continuous longitudinal strength members above strength deck	Grade B/AH within 0.4L amidships
Single side strakes for ships without inner continuous longitudinal bulkhead(s) between bottom and the strength deck	Grade B/AH within cargo region

Table II 1-6
Minimum Material Grades for Membrane Type Liquefied Gas Carriers with Length Exceeding 150 m (1)

Structural member		Material grade
Longitudinal plating of strength deck where contributing to the longitudinal strength		Grade B/AH within 0.4L amidships
Continuous longitudinal plating of strength members above the strength deck	Trunk deck plating	Class II within 0.4L amidships
	• Inner deck plating • Longitudinal strength member plating between the trunk deck and inner deck	Grade B/AH within 0.4L amidships

Notes:

(1) Table II 1-6 is applicable to membrane type liquefied gas carriers with deck arrangements as shown in the following figure. Table II 1-6 may apply to similar ship types with a "double deck" arrangement above the strength deck.

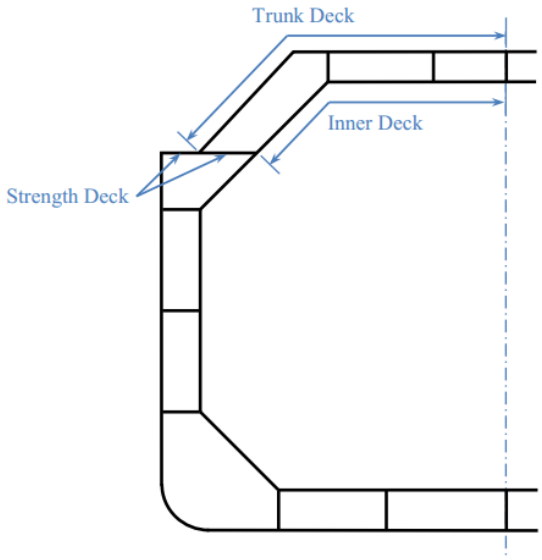

Figure: Typical deck arrangement for membrane type Liquefied Natural Gas Carriers

Table II 1-7
Minimum Material Grades for Ships with Length Exceeding 250 m

Structural member category	Material grade
Shear strake at strength deck(1)	Grade E/EH within 0.4L amidships
Stringer plate in strength deck(1)	Grade E/EH within 0.4L amidships
Bilge strake(1)	Grade D/DH within 0.4L amidships

(1) Single strakes required to be of Grade E/EH and within 0.4L amidships are to have breadths not less than 800+5L (mm), need not be greater than 1800 (mm), unless limited by the geometry of the ship's design.

Table II 1-8
Minimum Material Grades for Single-side Skin Bulk Carriers Subjected to SOLAS Regulation XII/6.4.3

Structural member category	Material grade
Lower bracket of ordinary side frame(1), (2)	Grade D/DH
Side shell strakes included totally or partially between the two points located to 0.125h above and below the intersection of side shell and bilge hopper sloping plate or inner bottom plate(2)	Grade D/DH

(1) The term "lower bracket" means webs of lower brackets and webs of the lower part of side frames up to the point of 0.125h above the intersection of side shell and bilge hopper sloping plate or inner bottom plate.

(2) The span of the side frame, h, is defined as the distance between the supporting structures.

Table II 1-9
Minimum Material Grades for Ships with Ice Strengthening

Structural member category	Material grade
Shell strakes in way of ice strengthening area for plates	Grade B/AH

Table II 1-10
Material Grade Requirements for Classes I, II and III

Class	I		II		III	
As-built thickness, in mm	NSS	HSS	NSS	HSS	NSS	HSS
$t \leq 15$	A	AH	A	AH	A	AH
$15 < t \leq 20$	A	AH	A	AH	B	AH
$20 < t \leq 25$	A	AH	B	AH	D	DH
$25 < t \leq 30$	A	AH	D	DH	D	DH
$30 < t \leq 35$	B	AH	D	DH	E	EH
$35 < t \leq 40$	B	AH	D	DH	E	EH
$40 < t \leq 50$	D	DH	E	EH	E	EH

Note :
NSS : Normal strength steel
HSS : Higher strength steel

Table II 1-11
Application of Material Classes and Grades – Structures Exposed at Low Temperatures

Structural member category	Material class	
	Within 0.4L amidships	Outside 0.4L amidships
SECONDARY: Deck plating exposed to weather, in general Side plating above BWL Transverse bulkheads above BWL(5) Cargo tank boundary plating exposed to cold cargo(6)	I	I
PRIMARY: Strength deck plating(1) Continuous longitudinal members above strength deck, excluding longitudinal hatch coamings Longitudinal bulkhead above BWL(5) Top wing tank bulkhead above BWL(5)	II	I
SPECIAL: Sheer strake at strength deck(2) Stringer plate in strength deck(2) Deck strake at longitudinal bulkhead(3) Continuous longitudinal hatch coamings(4)	III	II

Note:

(1) Plating at corners of large hatch openings to be specially considered. Class III or Grade E/EH to be applied in positions where high local stresses may occur.

(2) Not to be less than Grade E/EH within 0.4L amidships in ships with length exceeding 250 m.

(3) In ships with breadth exceeding 70 m at least three deck strakes to be Class III.

(4) Not to be less than Grade D/DH.

(5) Applicable to plating attached to hull envelope plating exposed to low air temperature. At least one strake is to be considered in the same way as exposed plating and the strake width is to be at least 600 mm.

(6) For cargo tank boundary plating exposed to cold cargo for ships other than liquefied gas carriers, see 1.5.8.

The material grade requirements for hull members of each class depending on thickness and design temperature are defined in Table II 1-12 to Table II 1-14. For design temperatures $t_D < -55$ºC, materials are to be specially considered by the Society.

Table II 1-12
Material Grade Requirements for Class I at Low Temperatures

Temperature	-11 / -15 ºC		-16 / -25 ºC		-26 / -35 ºC		-36 / -45 ºC		-46 / -55 ºC	
Plate thickness, in mm	MS	HT	MS	HT	MS	HT	MS	HT	MS	HT
t ≤ 10	A	AH	A	AH	B	AH	D	DH	D	DH
10 < t ≤ 15	A	AH	B	AH	D	DH	D	DH	D	DH
15 < t ≤ 20	A	AH	B	AH	D	DH	D	DH	E	EH
20 < t ≤ 25	B	AH	D	DH	D	DH	D	DH	E	EH
25 < t ≤ 30	B	AH	D	DH	D	DH	E	EH	E	EH
30 < t ≤ 35	D	DH	D	DH	D	DH	E	EH	E	EH
35 < t ≤ 45	D	DH	D	DH	E	EH	E	EH	-	FH
45 < t ≤ 50	D	DH	E	EH	E	EH	-	FH	-	FH

Table II 1-13
Material Grade Requirements for Class II at Low Temperatures

Temperature	-11 / -15 ºC		-16 / -25 ºC		-26 / -35 ºC		-36 / -45 ºC		-46 / -55 ºC	
Plate thickness, in mm	MS	HT	MS	HT	MS	HT	MS	HT	MS	HT
t ≤ 10	A	AH	B	AH	D	DH	D	DH	E	EH
10 < t ≤ 20	B	AH	D	DH	D	DH	E	EH	E	EH
20 < t ≤ 30	D	DH	D	DH	E	EH	E	EH	-	FH
30 < t ≤ 40	D	DH	E	EH	E	EH	-	FH	-	FH
40 < t ≤ 45	E	EH	E	EH	-	FH	-	FH	-	-
45 < t ≤ 50	E	EH	E	EH	-	FH	-	FH	-	-

Table II 1-14
Material Grade Requirements for Class III at Low Temperatures

Temperature	-11 / -15 ºC		-16 / -25 ºC		-26 / -35 ºC		-36 / -45 ºC		-46 / -55 ºC	
Plate thickness, in mm	MS	HT	MS	HT	MS	HT	MS	HT	MS	HT
t ≤ 10	B	AH	D	DH	D	DH	E	EH	E	EH
10 < t ≤ 20	D	DH	D	DH	E	EH	E	EH	-	FH
20 < t ≤ 25	D	DH	E	EH	E	EH	E	FH	-	FH
25 < t ≤ 30	D	DH	E	EH	E	EH	-	FH	-	FH
30 < t ≤ 35	E	EH	E	EH	-	FH	-	FH	-	-
35 < t ≤ 40	E	EH	E	EH	-	FH	-	FH	-	-
40 < t ≤ 50	E	EH	-	FH	-	FH	-	-	-	-

Table II 1-15
Brackets (Unit: mm)

Length of longer arm	Thickness		Breadth of flange	Length of longer arm	Thickness		Breadth of flange
	Plane	Flanged			Plane	Flanged	
150	6.5	-	-	700	14.0	9.5	70
200	7.0	6.5	30	750	14.5	10.0	70
250	8.0	6.5	30	800	-	10.5	80
300	8.5	7.0	40	850	-	11.0	85
350	9.0	7.0	40	900	-	11.0	90
400	10.0	8.0	50	950	-	11.5	90
450	10.5	8.0	50	1000	-	11.5	95
500	11.0	8.5	55	1050	-	12.0	100
550	12.0	8.5	55	1100	-	12.5	105
600	12.5	9.0	65	1150	-	12.5	110
650	13.0	9.0	65				

Chapter 2

Stems and Stern Frames

2.1 Stems

2.1.1 Plate stems

(a) The thickness of steel plate stems at the designed maximum load line is not to be less than that obtained from the following formula:

$$t = 1.5\sqrt{L - 50} + 3.5 \qquad \text{mm for } L \geq 90 \text{ m}$$

where:
L = Length of ship, in m.
t = Thickness of plate stem, in mm.

(b) Above and below the designed maximum load line, the thickness may be gradually tapered toward the stem head and the keel. At the upper end of stem it may be equal to the thickness of the side shell plating (at the fore end part) of the ship, and at the lower end of stem, it is to be equal to the thickness of the plate keel.

(c) Horizontal webs are to be fitted at intervals not exceeding 1 m. Where the stem radius is large, a center line stiffener may be required.

2.2 Stern Frames

2.2.1 Propeller Posts

(a) Propeller posts of cast steel stern frames and those of plate stern frames are to be of shape suitable for the stream line at the after part of hull, and the scantlings are to be equivalent to the standards given by the formulae and figures in Fig. II 2-1. Below the propeller boss, if shoe pieces are fitted, the breadth and thickness of propeller post are to be gradually increased in order to provide with strength and stiffness in proportion to those of the shoe pieces.

(b) The thickness of boss of propeller post is not to be less than that obtained from the following formula:

$$0.9L+10 \qquad \text{mm}$$

(c) The propeller posts of cast steel stern frames and those of plate stern frames are to be provided with ribs at a suitable interval. Where the radius of curvature is large, a center line stiffener is to be provided.

(d) In ships with relatively high speed for their length and in ships exclusively engaged in towing purposes, the scantlings of various parts of propeller posts are to be suitably increased.

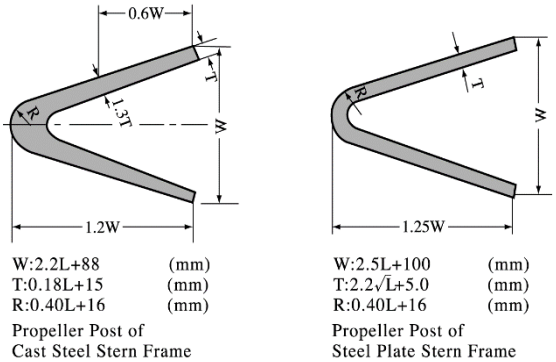

Fig. II 2-1
Standards of Propeller Posts

2.2.2 Shoe piece

(a) The section modulus about the vertical z-axis as shown in Fig. II 2-2 is not to be less than that obtained from the following formula:

$$Z_z = \frac{M_b K}{80} \qquad cm^3$$

(b) The section modulus about the transverse y-axis is not to be less than that obtained from the following formula:

$$Z_y = 0.5\ Z_z \qquad cm^3$$

(c) The sectional area is not to be less than that obtained from the following formula:

$$A_s = \frac{F_1 K}{48} \qquad mm^2$$

(d) At no section within the length l, the equivalent stress is to exceed 115/K (N/mm^2). The equivalent stress is to be determined by the following formula:

$$\sigma_e = \sqrt{\sigma_b^2 + 3\tau^2} \qquad N/mm^2$$

(e) The depth of the shoe piece is not to be less than half the breadth.

Where:

M_b	=	Bending moment at the section considered, in N-m.
	=	$F_1 x$ N-m
	≤	$F_1 l$ N-m
x	=	Distance (m) from the mid-point of the pintle bearing to the section considered, as shown in Fig. II 2-2 of this Chapter.
l	=	Distance (m) from the mid-point of the pintle bearing to the fixed point of the shoe piece, as shown in Fig. II 2-2 of this Chapter.
F_1	=	Supporting force in the pintle bearing, in N, normally $F_1 = F/2$.
F	=	Rudder force, in N. (See 24.2 of this Part).
σ_b	=	$\frac{M_b}{Z_Z(x)}$ N/mm^2

$Z_z(x)$	=	Section modulus about z-axis at the particular section under consideration, in cm³.
τ	=	$\frac{F_1}{A_S}$ N/mm^2
K	=	Material factor as specified in 1.5.2(a) or 1.5.2 (c) of this Part respectively.

2.2.3 Heel pieces in general are to extend forward by a distance not less than 3 frame spacings from the fore edge of the boss.

2.2.4 Rudder gudgeon

(a) The rudder gudgeon is to be an integral part of the stern frame; where special circumstances render it necessary to separate the gudgeon from the stern frame, the proposed design is to be specially submitted for approval.

(b) The bearing length, L_p, of the pintle is to be such that:

$D_p \leq L_p \leq 1.2\ D_p$

The length of the pintle housing in the gudgeon is not to be less than the pintle diameter, D_p. The thickness of the pintle housing is not to be less than 0.25 D_p.

(c) For ships specified in 24.3.3 of this Part, the thickness of the gudgeon is to be appropriately increased.

2.2.5 Rudder horn

(a) The rudder horn is to be designed as a curved transition into the hull plating, and special consideration is to be given to the effectiveness of the rudder horn plate in bending and to the stresses in the transverse web plates.

(b) The loads on the rudder horn as shown in Fig. II 2-3 are to be obtained from the following formula:

M_b	=	$F_1\ z$	N-m
	≤	$F_1\ d$	N-m
Q	=	F_1	N
Mt	=	$F_1\ e(z)$	N-m

where:

M_b	=	Bending moment.	N-m
Q	=	Shear force.	N
M_t	=	Torsional moment.	N-m
F_1	=	Supporting force in the pintle bearing as given in 24.2.3.	N
e(z), z and d	=	As shown in Fig. II 2-3.	m

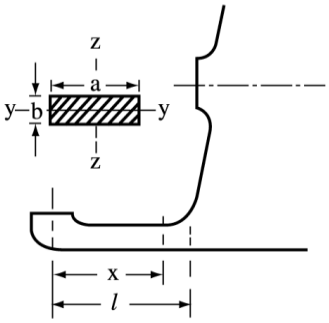

Fig. II 2-2
Shoe Piece

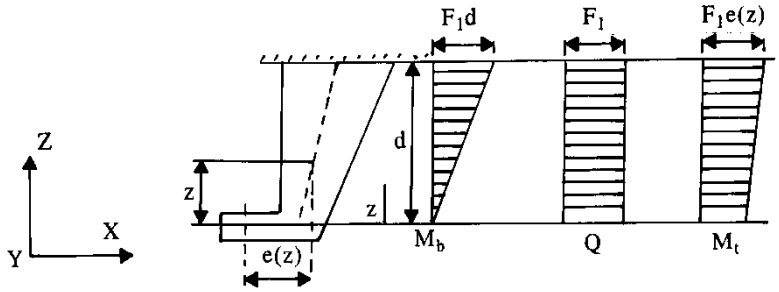

Fig. II 2-3
Loads on Rudder Horn

(c) The section modulus about the horizontal x-axis is not to be less than the value obtained from the following formula:

$$Z_x = \frac{M_b K}{67} \qquad cm^3$$

(d) The shear stress for the total section area A_h of the members in the y-direction is not to be larger than the value obtained from the following formula:

$$\tau = \frac{48}{K} \qquad N/mm^2$$

(e) At no section within the length d, the equivalent stress is to exceed 120/K (N/mm²). The equivalent stress is to be calculated by the following formula:

$$\sigma_e = \sqrt{\sigma_b^2 + 3(\tau^2 + \tau_t^2)} \qquad N/mm^2$$

where:

$$\sigma_b = \frac{M_b}{Z_X} \qquad N/mm^2$$

$$\tau = \frac{F_1}{A_h} \qquad N/mm^2$$

$$\tau_t = \frac{M_t 10^3}{2A_t t_h} \qquad N/mm^2$$

A_h = Effective shear area of rudder horn in y-direction. mm²

A_t = Area in the horizontal section enclosed by the rudder horn. mm²

t_h	=	Plate thickness of rudder horn.	mm
K	=	Material factor as specified in 1.5.2(a) or 1.5.2 (c) of this Part respectively.	
Z_x	=	Actual section modulus.	cm^3

2.2.6 The stern frame is to be extended upward at the part of the propeller post and connected securely to the transom floor of thickness not less than the value obtained from the following formula:

0.035L + 8.5 mm

Chapter 3
Longitudinal Strength

3.1 General

3.1.1 Ships of L ≥ 90 m intended to be classed for unrestricted service are to have longitudinal strength in accordance with the requirements in 3.1 to 3.4 of this Chapter except that ships having one or more of the following characteristics are to be subject to special consideration:

(a) Unusual proportions: L/B ≤ 5, B/D ≥ 2.5.

(b) Ship length of 500 m or more.

(c) Large deck opening.

(d) Small block coefficient: $C_b < 0.6$.

(e) Large flare and high speed.

(f) Carriage of heated cargoes.

(g) Unusual type of design.

3.1.2 Ship of L ≥ 90 m, the requirements of loading manual and loading instrument in 3.5 of this Chapter are to be considered as applicable.

3.2 Bending Strength

3.2.1 The sign convention of bending moment is as shown in Fig. II 3-1.

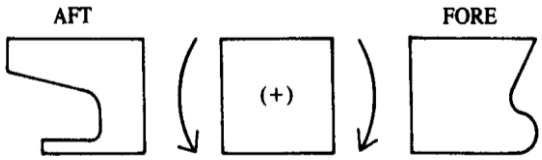

Fig. II 3-1
Sign Convention of Bending Moment

3.2.2 The required section modulus for 0.4 L amidship is to be obtained from the following equations, whichever gives greater value:

$$Z = \frac{M_t}{\sigma} \times 10^3 \quad cm^3, \text{ or}$$

$$Z_{min} = C_1 L^2 B (C_b + 0.7) K \quad cm^3$$

where:

Z = Required midship section modulus, in cm^3.

Z_{min} = Minimum section modulus, in cm^3.

M_t = Obtained as the maximum algebraic sum of still water bending moment and wave induced bending moment.
= $M_s + M_w$, in kN-m.
M_s = Still water bending moment at the transverse section under consideration along the length of hull, which is calculated from light ship, load weight and buoyancy of still water displacement, in kN-m.
M_w = Wave-induced bending moment at the transverse section under consideration along the length of the hull, which are obtained from the following formulae, in kN-m.
$M_{w(+)}$ = $+0.19C_1C_2L^2BC_b$ Hogging moment
$M_{w(-)}$ = $-0.11C_1C_2L^2B(C_b+0.7)$ Sagging moment
C_1 = Coefficient of ship length.
= $10.75 - \left(\frac{300 - L}{100}\right)^{1.5}$ $90\text{ m} \le L \le 300\text{ m}$
= 10.75 $300\text{ m} < L < 350\text{ m}$
= $10.75 - \left(\frac{L - 350}{150}\right)^{1.5}$ $350\text{ m} \le L \le 500\text{ m}$
C_2 = Coefficient along ship length as given in Fig. II 3-2.
L = Length of ship, in m.
B = Breadth of ship, in m.
C_b = Block coefficient at summer load water-line based on L as defined in 1.2.1. However, the value is to be taken as 0.6, where it is less than 0.6.
σ = Permissible bending stress.
= 175/K, in N/mm^2.
K = Material factor as specified in 1.5.2(a) of this Part.

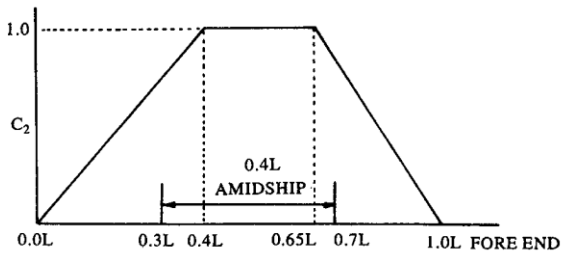

Fig. II 3-2
Coefficient C_2

3.2.3 Moment of inertia of the midship section I, is not to be less than the value obtained from the following formula:

$I = 3LZ$ cm^4

where:
I = Moment of inertia of the midship section, in cm^4.
L = Length of ship, in m.
Z = Required midship section modulus as specified in 3.2.2 above, in cm^3.

3.2.4 Bending strength at section other than amidship

(a) Bending strength at sections other than 0.4L amidships is to be determined according to the requirements of 11.2 of this Part. As a minimum, hull girder bending strength checks are to be carried out at the following locations:
(i) In way of the forward end of the engine room.
(ii) In way of the forward end of the foremost cargo hold.
(iii) At any locations where there are significant changes in hull cross-section.
(iv) At any locations where there are changes in the framing system.

Buckling strength of members contributing to the longitudinal strength and subjected to compressive and shear stresses is to be checked, in particular in regions where changes in the framing system or significant changes in the hull cross-section occur. The buckling evaluation criteria used for this check is determined by this Society. Continuity of structure is be maintained throughout the length of the ship. Where significant changes in structural arrangement occur adequate transitional structure is to be provided. For ships with large deck openings such as containerships, sections at or near to the aft and forward quarter length positions are to be checked. For such ships with cargo holds aft of the superstructure, deckhouse or engine room, strength checks of sections in way of the aft end of the aft-most holds, and the aft end of the deckhouse or engine room are to be performed.

(b) Where the Society considers that the application of requirements of (a) above is inappropriate, the bending strength at sections other than 0.4L amidships is to be determined according to the formula of $Z = M_t/\sigma$ given in 3.2.2 with necessary modifications.

3.2.5 Section modulus calculation

(a) In general, all of the following longitudinal members may be included in the calculation of the section modulus, provided that they are continuous or effectively developed within 0.4L amidships:
   (i) Deck plating of strength deck and other effective decks.
   (ii) Shell and inner bottom plating.
   (iii) Deck and bottom girders.
   (iv) Plating and longitudinal stiffeners of longitudinal bulkheads.
   (v) All longitudinals of deck, sides, bottom and inner bottom.
   (vi) Continuous trunks and longitudinal hatch coamings (if they are effectively supported by longitudinal bulkheads or deep girders).

(b) Deck openings on the strength deck are to be deducted from in the calculation of the section modulus. However, small openings not exceeding 2.5 m in length or 1.2 m in breadth need not be deducted provided that the sum of their breadths in any single transverse section is not more than $0.06(B - \sum b)$, where $\sum b$ is the sum of breadth of openings exceeding 1.2 m in breadth or 2.5 m in length, in m.

(c) Notwithstanding the requirements in (b), small deck openings on the strength deck need not be deducted, provided that the sum of their breadths or shadow area breadths in a single transverse section does not reduce the section modulus at deck or bottom by more than 3%, and provided that the height of lightening holes, draining holes and single scallops in longitudinals or longitudinal girders does not exceed 25% of the web depth, for scallops maximum 75 mm.

(d) Deck openings specified in (b) and (c) included the breadth in shadow area which is obtained by drawing two tangential lines with an opening angle of 30 degrees having the focus on the longitudinal lines of the ship.

(e) The section modulus at the strength deck is to be calculated by dividing the moment of inertia of the athwartship section about its horizontal neutral axis by the following distance (i) or (ii), whichever is greater:
   (i) Vertical distance from the neutral axis to the top of the strength deck at side.
   (ii) Distance obtained from the following formula:

$$y\left(0.9 + 0.2\frac{x}{B}\right) \qquad \text{m}$$

where:

x = Horizontal distance from the top of continuous strength member to the center line of the ship, in m.

y = Vertical distance from the neutral axis to the top of continuous strength member, in m.

In this case, x and y are to be measured to the point giving the largest value of the above formula.

(f) The section modulus at the bottom is to be calculated by dividing the moment of inertia of the athwartship section about its horizontal neutral axis by the vertical distance from the neutral axis to the top of keel.

(g) Longitudinal girders between multi-hatchways will be considered by special calculations.

3.3 Shearing Strength

3.3.1 Thickness of Shell Plating of Ships without Longitudinal Bulkheads

(a) The thickness of side shell plating is not to be less than the values of t_s obtained from the following two formulae at any transverse section under consideration along the length of the hull for all conceivable loading and ballast conditions.

$$t_s = 0.455|F_s + F_w(+)|\frac{m}{I} \quad \text{mm}$$

$$t_s = 0.455|F_s + F_w(-)|\frac{m}{I} \quad \text{mm}$$

where:

I	=	Moment of inertia of the transverse section under consideration about its horizontal neutral axis, in cm^4.
m	=	Moment of area about the horizontal neutral axis on the transverse section for longitudinal members above the considered position of side shell plating when the considered position is above the horizontal neutral axis, and below the considered position when the considered position is under the horizontal neutral axis, in cm^3.
F_s	=	Shearing force in still water at the transverse section under consideration along the length of the hull, which is calculated by a method deemed appropriate by the Society, in kN. The positive value of F_s, however, is to be defined as a positive value which is obtained assuming that downward loads are taken as positive values and are integrated in the forward direction from the aft end of the ship. See Fig. II 3-3.
F_w	=	Wave induced shearing force at the transverse section under consideration along the length of the hull, which are obtained from the following formulae, in kN:
$F_w(+)$	=	$+0.3C_1C_3LB(C_b+0.7)$
$F_w(-)$	=	$-0.3C_1C_4LB(C_b+0.7)$
C_1, L, B and C_b	=	As specified in 3.2.2.
C_3	=	Distribution factor as shown in Fig. II 3-4.
C_4	=	Distribution factor as shown in Fig. II 3-5.

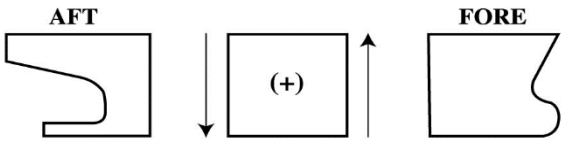

Fig. II 3-3
Sign Convention of Shear Force

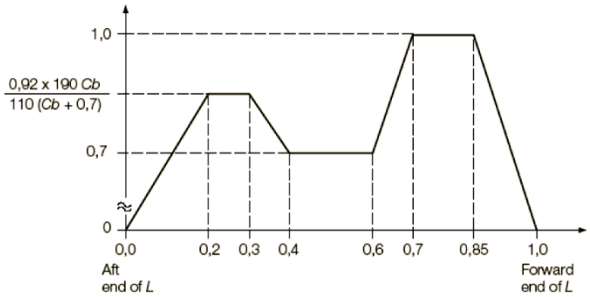

Fig. II 3-4
Distribution Factor, C_3

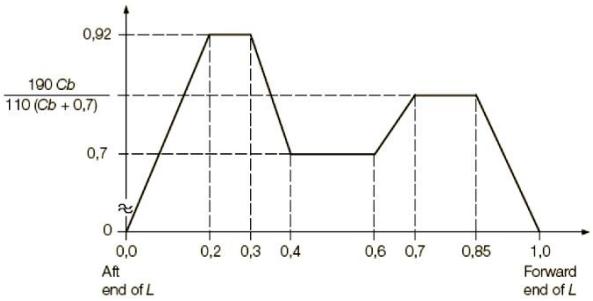

Fig. II 3-5
Distribution Factor, C_4

(b) In the case of ships which have bilge hopper tanks or top side tanks, or ships of which other longitudinal members below the strength deck are considered to share a part of the shearing force effectively, the thickness of side shell plating required by (a) may be reduced at the discretion of the Society.

3.3.2 Thickness of Side Shell Plating and Longitudinal Bulkhead Plating of Ships Having One to Four Rows of Longitudinal Bulkheads

(a) The thickness of side shell plating and longitudinal bulkhead plating of ships of types specified in Fig. II 3-6 is not to be less than the value of t_s obtained from the following formula at the transverse section under consideration along the length of hull for all conceivable loading and ballasting conditions. However, ships with double side hull construction provided with bilge hoppers in the double side hull structure are to be as deemed appropriate by the Society.

$$t_s = 0.91\frac{Fm}{I} \qquad \text{mm}$$

where:

I	=	As specified in 3.3.1.
m	=	As specified in 3.3.1.
F	=	Shear force acting upon the side shell plating or longitudinal bulkhead plating, the value of which is to be F(+) or F(−), whichever is greater:
F(+)	=	$\left\lvert \alpha\left(F_s + F_w(+)\right) + \Delta F \right\rvert$ kN
F(−)	=	$\left\lvert \alpha\left(F_s + F_w(-)\right) + \Delta F \right\rvert$ kN
F_s, F(+) and F(−)	=	As specified in 3.3.1.

α and ΔF may be based on those specified in Table II 3-1

k_1	=	Value is to be as specified in (i) to (iii) below for longitudinal bulkhead other than those provided in the double side hull.
k_2	=	Value is to be as specified in (i) to (iii) below for longitudinal bulkhead provided in the double side hull. However, values k_1 and k_2 may be suitably modified when

members are considered to share part of the shearing force.
(i) For parts not provided with longitudinal bulkhead: 0.0
(ii) For parts provided with a longitudinal bulkhead excluding the length of $0.5D_s$ from both ends: 1.0
(iii) Value obtained by linear interpolation for the intermediate parts between those specified in (i) and (ii).

A_s, A_L and A_{DL} = Sectional area of side shell plating amidships, longitudinal bulkhead plating amidships other than in the double side hull, and longitudinal bulkhead plating amidships in the double side hull, in mm^2.

W_a, W_b and W_c = Values obtained from the following formulae:
$W_a = h_a + h_d - d'$
$W_b = h_b + h_d - d'$
$W_c = h_c + h_d - d'$

d' = Draught at the part concerned in the loading condition under consideration, in m.

h_a, h_b, h_c and h_d = Water head, in m, converted from the weight of cargo or ballast in the center tanks, wing tanks, double side hull tank (excluding double bottom parts) and double bottom tanks in the condition under consideration, in m. Where the double hull forms one single tanks, the requirements apply separately to the portion that is the double side hull tank and the portion that is the double bottom tank. Where the double bottom tank is divided within either a, b or c, h_d is to be determined for respective ranges of the tank divided.

a, b and c = Half breadth of the center tank, breadth of wing tanks and breadth of double side hull tanks, in m.

S = Spacing of floors in double bottom, in m.

n_i = Number of floors in double bottom from the mid-point of transverse bulkheads to the section under consideration. Where the sign of n_i is to be negative when counted afterward and positive when counted forward. However, a swash bulkhead with an opening ratio of not less than 20% is not to be considered as transverse bulkhead. When a floor is provided at the mid-point between transverse bulkheads, n_i in this case, is to be obtained counting the floor as 0.5.

β = As specified below:
Where there is no effective center girder on double bottom: 1.0
Where there is an effective center girder on double bottom: 0.7

3.3.3 Where opening are provided in the shell plating, adequate consideration is to be given to the shearing strength and suitable compensation is to be made as necessary.

3.4 Buckling Strength

3.4.1 Application

These requirements apply to plate panels and longitudinals subject to hull girder bending and shear stresses, including the following members:

(a) For the compressive, bending and torsional buckling strength: longitudinal frames, beams and stiffeners; longitudinal bulkhead plating; and strength deck, bottom, and side shell plating of a longitudinal system in the midship part.

(b) For the shear buckling strength: side shell plating and longitudinal bulkhead plating within a reasonable distance forward and aft of each transverse bulkhead between bottom and deck plating.

(c) Members other than those in (a) and (b) above, of which the buckling strength is deemed necessary by the Society.

3.4.2 Elastic buckling stresses

(a) Elastic buckling of plates

(i) Compression

The ideal elastic buckling stress is given by:

$$\sigma_E = 0.9mE\left(\frac{t_b}{1000s}\right)^2 \qquad N/mm^2$$

For plating with longitudinal stiffeners (parallel to compressive stress):

$$m = \frac{8.4}{\Psi + 1.1} \qquad \text{for } 0 \le \Psi \le 1$$

For plating with transverse stiffeners (perpendicular to compressive stress):

$$m = c\left[1 + \left(\frac{s}{l}\right)^2\right]^2 \frac{2.1}{\Psi + 1.1} \qquad \text{for } 0 \le \Psi \le 1$$

where:

E	=	Modulus of elasticity of material
	=	2.06×10^5 N/ mm² for steel
t_b	=	Net thickness, in mm, of plating considering standard deductions equal to the values given in the Table II 3-2;
s	=	Shorter side of plate panel, in m,
l	=	Longer side of plate panel, in m,
c	=	1.3 when plating stiffened by floors or deep girders,
	=	1.21 when stiffeners are angles or T-sections,
	=	1.10 when stiffeners are bulb flats,
	=	1.05 when stiffeners are flat bars,
Ψ	=	Ratio between smallest and largest compressive σ_a stress when linear variation across panel.

(ii) Shear

The ideal elastic buckling stress is given by:

$$\tau_E = 0.9K_tE\left(\frac{t_b}{1000s}\right)^2 \qquad N/mm^2$$

where:

$$K_t = 5.34 + 4\left(\frac{s}{l}\right)^2$$

E, t_b, s and l are given in (i).

(b) Elastic buckling of longitudinals

(i) Column buckling without rotation of the cross section

For the column buckling mode (perpendicular to plane of plating) the ideal elastic buckling stress is given by:

σ_E	=	$0.001E(I_a)/(Al^2)$ N/ mm²
I_a	=	Moment of inertia, in cm^4, of longitudinal, including plate flange and calculated with thickness as specified in 3.4.2(a)(i),

A = Cross-sectional area, in cm^2, of longitudinal, including plate flange and calculated with thickness as specified in 3.4.2(a)(i),

l = Span, in m, of longitudinal,

A plate flange equal to the frame spacing may be included.

(ii) Torsional buckling mode

The ideal elastic buckling stress for the torsional mode is given by:

$$\sigma_E = \frac{\pi^2 E I_w}{10^4 I_P l^2}\left(m^2 + \frac{K}{m^2}\right) + 0.385E\frac{I_t}{I_P} \qquad N/mm^2$$

where:

K = $\frac{Cl^4}{\pi^4 E I_w}10^6$

m = Number of half waves, given by the following table:

	$0 < K < 4$	$4 \le K < 36$	$36 \le K < 144$	$(m-1)^2m^2 \le K < m^2(m+1)^2$
m	1	2	3	m

I_t = St. Venant's moment of inertia, in cm^4, of profile (without plate flange)

= $\frac{h_w t_w^3}{3}10^{-4}$ for flat bars (slabs)

= $\frac{1}{3}\left[h_w t_w^3 + b_f t_f^3\left(1 - 0.63\frac{t_f}{b_f}\right)\right]10^{-4}$ for flanged profiles

I_p = Polar moment of inertia, in cm^4, of profile about connection of stiffener to plate,

= $\frac{h_w^3 t_w}{3}10^{-4}$ for flat bars (slabs)

= $\left(\frac{h_w^3 t_w}{3} + h_w^2 b_f t_f\right)10^{-4}$ for flanged profiles

I_w = Sectorial moment of inertia, in cm^6, of profile about connection of stiffener to plate

= $\frac{h_w^3 t_w^3}{36}10^{-6}$ for flat bars (slabs)

= $\frac{t_f b_f^3 h_w^2}{12}10^{-6}$ for "tee" profiles

= $\frac{b_f^3 h_w^2}{12(b_f + h_w)^2}[t_f(b_f^2 + 2b_f h_w + 4h_w^2) + 3t_w b_f h_w]10^{-6}$ for angles and bulb profiles

h_w = Web height, in mm,

t_w = Web thickness, in mm, considering standard deductions as specified in 3.4.2(a)(i),

b_f = Flange width, in mm,

t_f = Flange thickness, in mm, considering standard deductions as specified in 3.4.2(a)(i). For bulb profiles the mean thickness of the bulb may be used.

l = Span of profile, in m,

s = Spacing of profiles, in m,

C = Spring stiffness exerted by supporting plate

= $\frac{k_p E t_p^3}{3s\left(1 + \frac{1.33 k_p h_w t_p^3}{1000 s t_w^3}\right)}10^{-3}$

k_p = $1-\eta_p$ not to be taken less than zero

t_p = Plate thickness, in mm, considering standard deductions as specified in 3.4.2(a)(i).

η_p = σ_a/σ_{Ep}

σ_a = Calculated compressive stress. For longitudinals, see 3.4.4(a).

σ_{Ep} = Elastic buckling stress of supporting plate as calculated in 3.4.2(a).

For flanged profiles, k_p need not be taken less than 0.1.

(iii) Web and flange buckling

For web plate of longitudinals the ideal elastic buckling stress is given by:

$$\sigma_E = 3.8E\left(\frac{t_w}{h_w}\right)^2 \qquad N/mm^2$$

For flanges on angles and T-sections of longitudinals, buckling is taken care of by the following requirement:

$$\frac{b_f}{t_f} \leq 15$$

b_f = Flange width, in mm, for angles, half the flange width for T-sections.
t_f = As built flange thickness.

3.4.3 Critical buckling stresses

(a) Compression

The critical buckling stress in compressiong σ_C is determined as follows:

σ_C = σ_E when $\sigma_E \leq \frac{\sigma_F}{2}$

= $\sigma_F\left(1 - \frac{\sigma_F}{4\sigma_E}\right)$ when $\sigma_E > \frac{\sigma_F}{2}$

σ_F = Yield stress of material, in N/mm^2, σ_F may be taken as 235 N/mm^2 for mild steel,

σ_E = Ideal elastic buckling stress calculated according to 3.4.2.

(b) Shear

The critical buckling stress in shear τ_C is determined as follows:

τ_C = τ_E when $\tau_E \leq \tau_F/2$

= $\tau_F\,[1 - \tau_F/(4\tau_E)]$ when $\tau_E > \tau_F/2$

τ_F = $\frac{\sigma_F}{\sqrt{3}}$

σ_F = As given in 3.4.3(a).

τ_E = Ideal elastic buckling stress in shear calculated according to 3.4.2(a)(ii).

3.4.4 Working stress

(a) For examination of buckling strength according to the requirements in this section, the working compressive stress of the member considered is to be obtained from the following formula, but is not to be less than 30/K.

$$\sigma_a = \frac{M_s + M_w}{I} y \cdot 10^5 \qquad N/mm^2$$

K = Material factor as specified in 1.5.2(a) of this part.
M_s = Longitudinal bending moment (kN-m), in still water as given in 3.2.2,
M_w = Wave induced longitudinal moment (kN-m) as given in 3.2.2,
I = Moment of inertia, in cm^4, at the transverse section considered.
y = Vertical distance, in m, from neural axis to the location of the member considered in the transverse section.

For members located above the neutral axis in the transverse section, the maximum values of M_s and M_w are to be taken in sagging condition, and for members located below the neutral axis, the maximum values of M_s and M_w are to be taken in hogging condition.

(b) For examination of buckling strength according to the requirements in this section, the working shearing stress of the member considered is to be obtained from the following (i) or (ii).

(i) Ships without longitudinal bulkhead

$$\tau_a = \frac{0.5mF}{It} \cdot 10^2 \qquad N/mm^2$$

where:

F = Shearing force as specified in 3.3.1(a), the value of whichever is greater: $|F_s + F_w(+)|$ or $|F_s + F_W(-)|$ kN

m = Moment of area, in cm^3, of the athwartship section considered, as specified in 3.3.1(a)

I = Moment of inertia, in cm^4, as in 3.4.4(a)

t = Thickness, in mm, of the member considered

(ii) Ships with longitudinal bulkhead

$$\tau_a = \frac{mF}{It} \cdot 10^2 \qquad N/mm^2$$

where:

F = Shearing force as specified in 3.3.2(a)

m, I and t = As specified in 3.4.4(b)(i)

3.4.5 Scantling criteria

(a) Buckling Stress

The design buckling stress σ_c of plate panels and longitudinals is not to be less than:

$$\sigma_c \geq \beta\sigma_a$$

where:

β = 1 for plating and for web plating of stiffeners (local buckling).

β = 1.1 for stiffeners.

The critical buckling stress τ_C of plate panels is not to be less than:

$$\tau_c \geq \tau_a$$

3.5 Loading Manual and Loading Instrument

3.5.1 These requirements apply to all classed sea-going ships of 90 m in length and above. Additional requirements applied to bulk carriers of 150 m in length and above are given in Part III, Chapter 1A.

3.5.2 Definitions

(a) Loading Manual: A loading manual is a document which describes:

(i) The loading conditions on which the design of the ship has been based, including permissible limits of still water bending moment and shear force

(ii) The results of the calculations of still water bending moments, shear forces and where applicable, limitations due to torsional and lateral loads

(iii) The allowable local loading for the structure (hatch covers, decks, double bottom, etc.)

(b) Loading Instrument: A loading instrument is an instrument, which is either analog or digital, by means of which it can be easily and quickly ascertained that, at specified read-out points, the still water bending moments, shear forces, and the still water torsional moments and lateral loads, where applicable, in any load or ballast condition will not exceed the specified permissible values. An operational manual is always to be provided for the loading instrument. Single point loading instruments are not acceptable.

(c) Category I Ships:

(i) Ships with large deck openings where combined stresses due to vertical and horizontal hull girder bending and torsional and lateral loads have to be considered;

(ii) Ships liable to carry non-homogeneous loadings, where the cargo and/or ballast may be unevenly distributed. Ships less than 120 metres in length, when their design takes into account uneven distribution of cargo or ballast, belong to Category II;

(iii) Chemical tankers and gas carriers.

(d) Category II Ships:

Ships with arrangement giving small possibilities for variation in the distribution of cargo and ballast, and ships on regular and fixed trading pattern where the loading manual gives sufficient guidance, and in addition the exception given under Category I.

3.5.3 Annual and Special Survey

(a) At each annual and special Survey, it is to be checked that the approved loading guidance information is available on board.

(b) The loading instrument is to be checked for accuracy at regular intervals by the ship's Master by applying test loading conditions.

(c) At each special survey, this checking is to be done in the presence of the Surveyor.

3.5.4 Loading Conditions - Loading Manual and Loading Instrument

(a) General

An approved loading manual is to be supplied for all ships except those of Category II with length less than 90 m in which the deadweight does not exceed 30% of the displacement at the summer loadline draft. In addition, an approved loading instrument is to be supplied for all ships of Category I of 100 m in length and above.

(b) Conditions of Approval of Loading Manuals

The approved loading manual is to be based on the final data of the ship. The manual is to include the design loading and ballast conditions upon which the approval of the hull scantlings is based. Appendix 1 of this Part contains, as guidance only, a list of the loading conditions which normally should be included in the

loading manual. In case of modifications resulting in changes to the main data of the ship, a new approved loading manual is to be issued. The loading manual must be prepared in a language understood by the users. If this language is not English, a translation into English is to be included.

(c) Conditions of Approval of Loading Instruments

(i) The loading instrument is subject to approval, which is to include:

(1) Verification of type approval, if any,

(2) Verification that the final data of the ship has been used,

(3) Acceptance of number and position of read-out points,

(4) Acceptance of relevant limits for all read-out points,

(5) Checking of proper installation and operation of the instrument on board, in accordance with agreed test conditions, and that a copy of the operation manual is available.

(ii) Recommendations on the approval of loading instruments are given in Part I/Appendix 1 "Loading Computer System (LCS) for Stability and Longitudinal Strength".

(iii) In case of modifications implying changes in the main data of the ship, the loading instrument is to be modified accordingly and approved.

(iv) The operation manual and the instrument output must be prepared in a language understood by the users. If this language is not English, a translation into English is to be included.

(v) The operation of the loading instrument is to be verified upon installation. It is to be checked that the agreed test conditions and the operation manual for the instrument is available on board.

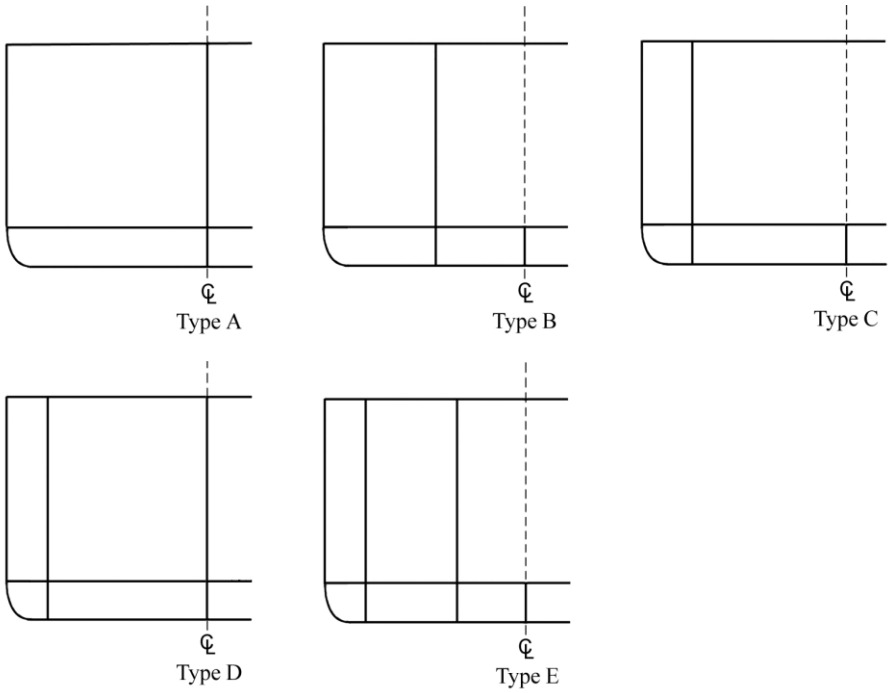

Fig. II 3-6
Types of Ships with Longitudinal Bulkheads

Table II 3-1
Values of α and ΔF

Type	Application	$\alpha = \alpha_1 \cdot \alpha_2$		$\Delta F = n_i(R - \alpha f)$	
		α_1	α_2	R	f
A	Side shell	$0.5 - 0.575\frac{k_1 A_L}{2A_s + A_L}$	1	$4.9W_b bS$	$19.6W_b bS$
	Longitudinal bulkhead	$0.575\frac{k_1 A_L}{2A_s + A_L}$	2	$9.8W_b bS$	
B	Side shell	$0.5 - 0.55\frac{k_1 A_L}{A_s + A_L}$	1	$4.9W_b bS$	$19.6(W_a a + W_b b)S$
	Longitudinal bulkhead	$0.55\frac{k_1 A_L}{A_s + A_L}$		$9.8(\beta W_a a + 0.5W_b b)S$	
C	Side shell	0.5	$1 - \frac{1.06k_2 A_{DL}}{A_s + A_{DL}}$	$4.9(\beta W_a a + W_c c)S$	$19.6(W_a a + W_c c)S$
	Longitudinal bulkhead		$\frac{1.06k_2 A_{DL}}{A_s + A_{DL}}$		
D	Side shell	$0.5 - \frac{0.675k_1 A_L}{2(A_s + A_{DL}) + A_L}$	$1 - \frac{1.05k_2 A_{DL}}{A_s + A_{DL}}$	$4.9(0.5W_b b + W_c c)S$	$19.6(W_b b + W_c c)S$
	Outer longitudinal bulkhead		$\frac{1.05k_2 A_{DL}}{A_s + A_{DL}}$		
	Center longitudinal bulkhead	$\frac{0.675k_1 A_L}{2(A_s + A_{DL}) + A_L}$	2	$9.8W_b bS$	
E	Side shell	$0.5 - \frac{0.615k_1 A_L}{A_s + A_{DL} + A_L}$	$1 - \frac{1.04k_2 A_{DL}}{A_s + A_{DL}}$	$4.9(0.5W_b b + W_c c)S$	$19.6(W_a a + W_b b + W_c c)S$
	Outer longitudinal bulkhead		$\frac{1.04k_2 A_{DL}}{A_s + A_{DL}}$		
	Inner longitudinal bulkhead	$\frac{0.615k_1 A_L}{A_s + A_{DL} + A_L}$	1	$9.8(\beta W_a a + 0.5W_b b)S$	

Table II 3-2
Net Thickness of Plating, t_b

Structure	Standard deduction (mm)	Limit values min-max (mm)
Compartments carrying dry bulk cargoes One side exposure to ballast and/or liquid cargo Vertical surfaces and surfaces sloped at an angle greater than 25° to the horizontal line	0.05t	0.5 - 1
One side exposure to ballast and/or liquid cargo Horizontal surfaces and surfaces sloped at an angle less than 25° to the horizontal line Two side exposure to ballast and/or liquid cargo Vertical surfaces and surfaces sloped at an angle greater than 25° to the horizontal line	0.10t	2 - 3
Two side exposure to ballast and/or liquid cargo Horizontal surfaces and surfaces sloped at an angle less than 25° to the horizontal line	0.15t	2 - 4

Chapter 4

Single Bottoms

4.1 Floors

4.1.1 Scantling of floors.

(a) Floors are to be fitted at every frame and to have the scantling necessary to obtain section modulus as obtained from the following formula:

$SM = 4.3\ s\ d\ l^2 \quad cm^3$

where:

s = The spacing of floor, in m.

d = Draught or 0.66 the depth, whichever is greater, in m.

l = Unsupported span of floor in m, generally measured on upper edge of floor from side to side and normally the value of *l* is to be taken not less than 0.7B.

(b) The depth of floor plates at centerline is not to be less than 0.0625*l*, in m.

(c) The thickness of floor plates is to be maintained throughout the midship one-half ship length, and is not to be less than:

$t = 0.01\ h + 3 \quad mm$

where:

h = Depth of floor plates at centerline, in mm.

(d) The thickness of floor plates may be reduced by 10% at 0.1L from the ends, however, in the flat part of bottom forward, this reduction is not to be made.

4.1.2 Face plates and flanges

(a) The floors are to be stiffened at their upper edge with face plates to make section modulus not less than required by 4.1.1(a) of this Part.

(b) In the case of flanged plate floors, the effective width of flanges is to have the same sectional area as that required for face plates.

(c) If face plates are cut at the center keelson, care must be taken that strength is transferred efficiently by the face plates.

4.1.3 For floors in engine room and under the boiler bearer:

(a) The depth of the floors under the engine seating is to be increased to provide an efficient support and the thickness is to be increased by 1 mm to that given in 4.1.1(c) of this chapter and not to be less than the center keelson plate.

(b) The thickness of floor plates in the engine room is to be increased under boilers by at least 2 mm to that given in 4.1.1(c) of this chapter.

(c) The face plate area is to be doubled to that given in 4.1.2(a) of this Part.

4.1.4 Flanging instead of face plates is not permitted in the engine room, under the boiler bearer and in way of the strengthening of the bottom forward.

4.1.5 The upper edge of floors at any part is not to be below the level of the upper edge of floors at the center line.

4.1.6 Side frames are to be efficiently attached to floor plates. Where the rise of floors is small, the side frames are to be provided with brackets at their lower end.

4.1.7 Lighting holes may be provided in floor plates. Where the holes are provided, appropriate strength compensation is to be made by increasing the floor depth or by some other suitable means if deemed necessary.

4.1.8 Connection between side frame and floor

The size of side frame bracket, which is the connection between side frame and floor, as shown in Fig. II 4-1, is to be in accordance with the following requirements, and the free edge of bracket is to be stiffened also.

(a) The brackets are to extend to the height above the top of keel higher than twice the required depth of floors at the centre line.

(b) The arm length of brackets measured from the outer edge of frames to the bracket toe along the upper edge of floors, is not to be less than the required depth of floors at the centre line.

(c) The thickness of brackets is not to be less than that of the floors required in 4.1.1.

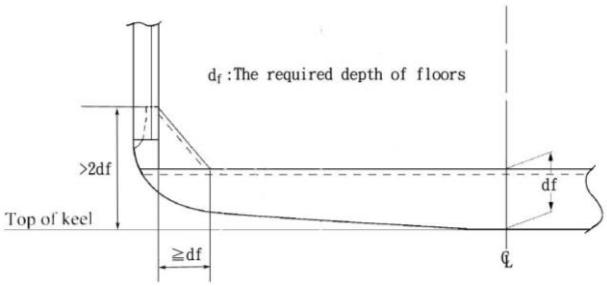

Fig. II 4-1
Side Frame Bracket

4.2 Center Keelsons

4.2.1 Center keelsons are to extend as far forward and aft as practicable. The depth is not to be less than the floor.

4.2.2 The scantling of center keelsons is to be obtained from the following formula:

(a) Minimum thickness of vertical plates and horizontal top plates amidships:

$t = 0.064 L + 5.5$ mm

(b) Minimum thickness of vertical plates and horizontal top plates at ends:

$t = 0.05 L + 5.0$ mm

(c) Sectional area of horizontal top plates amidships:

$A = 0.7 L + 10$ cm^2

(d) Horizontal top plate sectional area may be reduced by 10% at ends.
where:

L = Length of ship, in m.

4.2.3 For ships with length less than 50 m, where a horizontal plate is used as the center keelson on the top of the floor, it is to be stiffened between floors.

4.2.4 Where the center keelson is cut at bulkheads, the longitudinal strength is to be efficiently maintained.

4.3 Side Keelsons

4.3.1 Side Keelsons are to extend as far forward and aft as practicable.

4.3.2 The minimum thickness of vertical plates and face plates of side keelsons amidships is to be obtained from the following formula:

$t = 0.05 L + 5.0$ mm

where:
L = Length of ship, in m.
The thickness may be reduced by 10% at ends.

4.3.3 Face plate area of side keelsons

(a) The face plate area of side keelsons is to be obtained from the following formula:

$A = 0.2 L + 6$ cm^2

where:
L = Length of ship, in m.

(b) The face plate area is to be maintained continuously amidships, but may be reduced by 10% at ends.

4.3.4 Spacing of side keelsons

(a) Side keelsons are to be so arranged that the spacing is not more than 2.15 m between the center keelson and the first side keelson, between keelsons, or between the outboard side keelson and the lower turn of the bilge.

(b) Additional side keelsons are to be fitted in the machinery space.

4.3.5 In ships having a partial double bottom, side keelsons are to extend at least 3 frame spacings into the double bottom.

4.4 Strengthening of Bottom Forward

4.4.1 The strengthening of the bottom structure forward is to be in accordance with the requirements in Chapter 8 of this Part.

4.5 Pumping and Drainage

4.5.1 Efficient provision is to be made to permit water from every part of the bottom to reach pump suctions.

Chapter 5
Double Bottoms

5.1 General

5.1.1 Double bottoms are to be made as wide as possible, and not lower at any part than a plane parallel to the keel line and which is located not less than an upward vertical distance h measured from the keel line.

h = B/20

Where B is the ship moulded breadth
However, in no case is the value of h to be less than 0.76 m, and need not be taken greater than 2.0 m.

5.1.2 The double bottom is to be fitted extending from the collision bulkhead to the after peak bulkhead.

5.1.3 When deemed appropriate by the Society, the double bottom may be omitted wholly or partially. In this case, the arrangement and construction are to be specially considered.

5.1.4 The requirements of this Chapter may be suitably modified for the partial double bottom.

5.1.5 If double bottoms of different depths are arranged, efficient transmission of strength within 0.6L amidships is to be provided.

5.1.6 The strengthening of the bottom structure forward is to be in accordance with the requirements in Chapter 8 of this Part.

5.1.7 Efficient provision is to be made for the free passage of air and water from every part of the tank to air pipes and the suctions.

5.1.8 The scantling of members in double bottom tanks intended to be deep tanks are to be in accordance with the requirements in Chapter 16. However, the thickness of the inner bottom plating need not be increased by 1.0 mm as given for top plating of deep tanks in 16.2.7 of this Part.

5.1.9 The requirements of this chapter are to be applied where the apparent specific gravity of cargo in the loaded hold γ is not greater than 0.9. The requirements in Part III Chapter 1 are to be applied where γ is greater than 0.9, or to double bottom ships with empty holds in fully loaded condition or that have bilge hopper. The apparent specific gravity of cargo is to be obtained from the following formula:

$$\gamma = \frac{W}{V}$$

Where:
W = Mass (t) of cargoes in the hold
V = Volume (m^3) of the hold excluding hatchways

5.1.10 Special consideration is to be given to the double bottom structure of the hold when it is intended to carry heavy cargoes, where the ratio of cargo weight per unit area of the inner bottom plating to draught (d) is less than 5.40 or when

cargo cannot be treated as evenly distributed loads. Where the value of cargo weight per unit area is given in t/m^2, kN/m^2 is obtained from the product of the value in t/m^2 and 9.81.

5.2 Center Girders

5.2.1 The scantling of center girders is to be obtained from the following formula:

(a) The depth of center girder plate is not to be less than B/16 unless specially approved by the Society.

(b) Thickness of center girder plate:

The thickness of the center girder plates is not to be less than that provided by the following requirements (i) and (ii) whichever is greater:

(i) $$t = C_1 K \frac{SBd}{d_0 - d_1}\left(2.6\frac{x}{l_H} - 0.17\right)\left[1 - 4\left(\frac{y}{B}\right)^2\right] + 2.5 \quad \text{mm}$$

Where:

K = Material factor as specified in 1.5.2(a) of this Part

S = Distance (m) between the centres of two adjacent spaces from the girder under consideration to the adjacent longitudinal girders or the line of toes of tank side brackets

d_0 = Depth (m) of the girder under consideration

d_1 = Depth (m) of the opening at the point under consideration

l_H = Length (m) of the hold

x = Longitudinal distance (m) between the centre of l_H of each hold and the point under consideration, but not taken less than 0.2 l_H and more than 0.45l_H

y = Transverse distance (m) from the centre line of the ship to the longitudinal girder

C_1 = Coefficient given by the following formulae:

- Longitudinal framing:
  $\frac{3 - B/l_H}{103}$, but not to be taken less than 1/40 and more than 1/64.
- Transverse framing:
  $\frac{3 - B/l_H}{90}$, but not to be taken less than 1/35 and more than 1/56.

(ii) $$t = \frac{C_1' d_0}{\sqrt{K}} K + 2.5 \quad \text{mm}$$

Where:

C_1' = Coefficient obtained from Table II 5-1 as below depending on S_1/d_0

S_1 = Spacing of the brackets or stiffeners provided on the considered girder

K = Material factor as specified in 1.5.2(a) of this Part

d_0 = Depth (m) of the girder under consideration

Table II 5-1
Values of C_1'

S_1/d_0		0.3 and under	0.4	0.5	0.6	0.7	0.8	0.9	1.0	1.2	1.4	1.6 and over
C_1'	Center girder	4.4	5.4	6.3	7.1	7.7	8.2	8.6	8.9	9.3	9.6	9.7
	Side girder	3.6	4.4	5.1	5.8	6.3	6.7	7.0	7.3	7.6	7.9	8.0

(c) Where the boiler is mounted on the tank top, the thickness of center girder plate in way of the boiler is to be suitably increased.

5.2.2 Center girders are to extend as far forward and aft as practicable and to be attached to stern frames as far as possible.

5.2.3 Center girder plates are to be continuous within the midship 0.75L.

5.2.4 For the double bottom of longitudinal system, the center girders are to be suitably stiffened between floors and docking brackets of scantling not less than the following requirements are to be provided:

(a) The brackets are to be of a depth not less than 0.08 times the centre girder depth, and of a thickness not less than that obtained from the following formula.

$$t = 0.6\sqrt{L} + 2.5 \qquad \text{mm}$$

(b) The brackets are to extend from the center girder to the adjacent longitudinal.

(c) The brackets are to be spaced not more than 1.75 m. Where the spacing of these brackets exceeds 1.25 m, additional stiffeners are to be provided on the center girder plates.

5.3 Side Girders and Brackets Inside Tank

5.3.1 The thickness of the side girders is not to be less than that required in 5.2.1(b) of this Chapter. Where the boiler is mounted on the tank top, the thickness of side girders is to be suitably increased.

5.3.2 Side girders may be fitted intercostally between floors

5.3.3 Side girders in 0.5L amidships and aft are to be so arranged that the spacing between the center girder and the first side girder, between the girders, or between the outboard side girder and the center of the margin plate is not to be more than 4.6 m.

5.3.4 Additional side girders of full or half depth are to be fitted under the machinery space, the thrust seating and the widely spaced pillar.

5.3.5 The thickness of brackets inside tanks is to be as given in 5.2.4(a) of this Chapter.

5.4 Solid Floors

5.4.1 Scantling of solid floors

(a) The thickness of the solid floor plates inside tanks, in holds and engine room is not to be less than that obtained from the following requirements (i) and (ii) whichever is greater.

(i) $$t_1 = C_2 K \frac{SB'd}{d_0 - d_1}\left(\frac{2y}{B''}\right) + 2.5 \qquad \text{mm}$$

Where:

C_2 = Coefficient obtained from Table II 5-2 of this Chapter depending on B/l_H

K = Material factor as specified in 1.5.2(a) of this Part.

S = Spacing (m) of solid floors

B' = Distance (m) between the lines of toes of tank side brackets at the top of inner bottom plating at the midship part

B" = Distance (m) between the lines of toes of tank side brackets at the top of inner bottom plating at the position of the solid floor

y = Transverse distance (m) from the centreline to the point under consideration, but not to be taken less than B"/4 and more than B"/2.

d_0 = Depth (m) of the solid floor at the point under consideration

d_1 = Depth (m) of the opening at the point under consideration

(ii) $$t_2 = 8.6 \times \sqrt[3]{\frac{H^2 d_0^2}{C_2' K}(t_1 - 2.5)} + 2.5 \quad \text{mm}$$

Where

t_1 = Thickness obtained from 5.4.1(a)(i) above

C_2' = Coefficient given in Table II 5-3 depending on the ratio of the spacing of stiffener S_1 (m) to d_0

K = Material factor as specified in 1.5.2(a) of this Part.

H = Value obtained in accordance the cases as below:

	Cases	H
(a)	Slots of depth d_1 (m) on solid floors without reinforcement	$\begin{cases} \sqrt{4\left(\frac{d_1}{S_1}\right) - 1.0} & \text{for } d_1/S_1 > 0.5 \\ 1.0 & \text{for } d_1/S_1 \leq 0.5 \end{cases}$
(b)	Openings of major diameter ∅ (m) on solid floors without reinforcement	$1 + 0.5\frac{\varnothing}{d_0}$
(c)	Slots and Openings on solid floors without reinforcement	(a)×(b)
(d)	Where (a), (b) and (c) are not applicable	1.0

Table II 5-2
Values of C_2

B/l_H		Longitudinal framing	Transverse framing	
Above	Below		Where solid floors are provided at every frame	Elsewhere
	0.4	0.029		0.020
0.4	0.6	0.027		0.019
0.6	0.8	0.024		0.017
0.8	1.0	0.022		0.015
1.0	1.2	0.019		0.013
1.2		0.017		0.012

Table II 5-3
Values of C_2'

S_1/d_0	0.3 and under	0.4	0.5	0.6	0.7	0.8	0.9	1.0	1.2	1.4 and over
C_2'	64	38	25	19	15	12	10	9	8	7

(b) Where the boiler is mounted on the tank top, the thickness of the floor in way of the boiler is to be suitably increased.

5.4.2 Solid floors are to be fitted:

(a) On every frame under the machinery and the transverse boiler seatings.

(b) On every frame or alternate frame in way of strengthening of the bottom structure forward as specified in Chapter 8 of this Part.

(c) Under the transverse bulkhead.

(d) Except in cases of (a), (b) and (c), at intervals not exceeding 3.60 m in association with the intermediate open floor or the longitudinal framing of the double bottom.

5.4.3 Tank end floors

(a) Tank end floors are to be so arranged that the subdivision of the bottom generally corresponds to that of the ship.

(b) Tank end floors are to be of the thickness required for deep tank boundaries accordingly to Chapter 16 of this Part.

5.4.4 Oil tight cofferdams are to be provided in double bottoms between compartments for carrying oil and fresh water.

5.4.5 Solid floors under the thrust seating and under the pillar are to be specially strengthened.

5.4.6 Where the depth of the double bottom exceeds 900 mm, tank end floors are to be fitted with stiffeners whose scantling complies with the requirements in Chapter 16 of this Part.

5.5 Open Floors

5.5.1 Open floors are to be fitted at each frame where solid floors are not fitted.

5.5.2 Bottom frames and reverse frames

(a) The section modulus of bottom and reverse frames on the open floor are not to be less than that obtained from the following formula:

$8\ s\ h\ l^2\ \text{cm}^3$

where:

l = Span, in m, specified as follows:
= The distance between the connecting bracket on the center girder and the margin plate, where the side girder is not fitted.
= The greatest distance between the support given by the side girder and the bracket, where the side girder is fitted.
s = Frame spacing, in m.
h = The vertical distance, in m.

= The vertical distance, in m, measured from the top of keel to the load line, or to the line corresponding to 0.66 the depth to the free-board or bulkhead deck, whichever is the greater, where the bottom frames and the reverse frames are fitted with the strut.

= The vertical distance, in m, measured from the top of keel to the load line, or to the line corresponding to 0.66 the depth to the freeboard or bulkhead deck, or to the top of the deep tank, whichever is the greatest, where the bottom frames and the reverse frames are fitted with the strut in way of the deep tank.

= The vertical distance, in m, measured from the top of the double bottom, where the bottom frames and the reverse frames are not fitted with the struts.

(b) Where struts are fitted between brackets and side girders and spaced not more than 1.5 m apart, the section modulus of the bottom and reverse frame may be reduced to half that given in 5.5.2(a) of this Chapter.

5.5.3 Strengthening of bottom frames and reverse frames

(a) The thickness of bottom frames is to be increased by 1 mm in the boiler space.

(b) The thickness of reverse frames is to be increased by 2 mm in the boiler space.

5.5.4 Struts

(a) Struts, if fitted to reduce the unsupported span of frames is to be of a vertical angle with a sectional area not less than that obtained from the following formula:

$2.82\ s\ h\ b$ cm^2

where:

b = The breadth of the area supported by the vertical strut, in m.

s and h = As defined in 5.5.2 of this Chapter.

(b) Struts are to be increased 1.5 mm in thickness in way of the boilers.

5.5.5 Center and side brackets

(a) The frames and reverse frames are to be connected to the center girder and the margin plate by the center and the side bracket of a thickness required for the adjoining solid floor.

(b) Center and side brackets are to have a breadth not less than 0.05B.

(c) The free edge of bracket is to be properly stiffened.

5.5.6 At side girders, bottom and reverse frames are to be supported by welded flat bars having the same depth as the reverse frames and the same thickness as the side girder plates.

5.6 Longitudinal Framing in Double Bottom

5.6.1 For requirements not specified in this Section, pertinent provisions in other Sections are to apply.

5.6.2 The standard spacing of longitudinal frames is obtained from the following formula:

s = 2L + 550 mm, but in no case over 1000 mm.

where:
L = Length of ship, in m.

5.6.3 The section modulus of bottom longitudinal frames is not to be less than that obtained from the following formula:

$$\frac{100CK}{24 - 15.5f_BK}(d + 0.026L')Sl^2 \quad cm^3$$

where:
f_B = Ratio of the required hull girder section modulus as calculated in Chapter 3 of this Part when mild steel is used to the actual hull girder section modulus at bottom.
L' = Length (m) of the ship, not to be taken larger than 230 m.
l = Spacing (m) of the solid floors
S = Spacing (m) of the longitudinals
C = Coefficient given below:
Case 1: 1.0, when no strut provided midway between floors;
Case 2: When a strut provided midway between floors as specified in 5.5.4 of this Chapter:
0.625, for Lower part of deep tank, or
0.5, for elsewhere.
K = Material factor as specified in 1.5.2(a) of this Part.

5.6.4 The section modulus of inner bottom longitudinal frames may be 75% of that of bottom longitudinal frames but not less than the value obtained from the following formula:

$$\frac{100C'KShl^2}{24 - 12f_BK} \quad cm^3$$

where:
f_B, l, and S = As specified in 5.6.3 of this Chapter.
h = Vertical distance (m) from the top of the inner bottom plating to the lowest deck at centreline. However, when the cargo is carrier exceeding the lowest deck, h is to be taken from the top of the inner bottom plating to the deck just above the top of the cargo at centreline.
C' = Case 1: 0.9, when no strut provided midway between floors;
Case 2: 0.54, when a strut provided midway between floors as specified in 5.5.4 of this Chapter.
K = Material factor as specified in 1.5.2(a) of this Part.

5.6.5 Bottom and inner bottom longitudinals are to be continuous or attached at their ends in such a manner as to develop effectively the sectional area and the resistance to bending.

5.6.6 Where vertical struts are fitted between bottom and inner bottom longitudinal frames midway between the floor plates, the sectional area of the struts is not to be less than that obtained in 5.5.4(a) of this Chapter.

5.6.7 Vertical stiffeners are to be fitted on floor plates at each longitudinal for which the thickness is to be at least that of the solid floors and the depth greater than 0.08 d_0 where d_0 is the depth of the floor at the point under consideration.

5.6.8 Vertical or horizontal stiffeners are to be arranged on side girders between floors which are fitted two or more frame spaces apart. The stiffeners are to have a depth not less than 100 mm and a thickness equal to the side girder thickness.

5.6.9 Flanged transverse brackets of the following scantling are to be fitted from margin brackets at every frame between solid floors.

(a) The thickness is not to be less than that required for side girder plates in engine room.

(b) The breadth is to be extended to the adjacent longitudinal.

5.6.10 Where some portion of the double bottom of the ship is built according to the transverse framing system, arrangement is to be made to insure the continuity of longitudinal strength at the point of the connection of both systems.

5.6.11 Where the double bottom is framed longitudinally, transverse brackets are to be provided at every hold frame extending from the margin plate to the adjacent bottom and inner bottom longitudinals and to be connected with margin plates, shell plating and longitudinals. The thickness of the bracket is not to be less than that required in 5.2.4(a) of this Chapter.

5.7 Inner Bottoms, Margin and Bottom Plates

5.7.1 Thickness of inner bottom plating

(a) The inner bottom plating in holds is to be of the thickness obtained from the following formula (i) and (ii) whichever is greater.

(i) $t = \frac{C_H K}{1000} \times \frac{B^2 d}{d_0} + 2.5 \quad \text{mm}$

where:

d_0 = Depth (m) of the center girder

K = Material factor as specified in 1.5.2(a) of this Part.

C_H = Coefficient set to:

b_0 for $B/l_H < 0.8$

b_0 or $\alpha.b_1$ whichever is greater for $0.8 \leq B/l_H < 1.2$

$\alpha.b_1$ for $B/l_H \geq 1.2$

with:

$$\alpha = \frac{13.8}{24 - 11 f_B K}$$

where:

K: Material factor as specified in 1.5.2(a) of this Part.

f_B = Ratio of the required hull girder section modulus as calculated in Chapter 3 of this Part when mild steel is used to the actual hull girder section modulus at bottom.

b_0 & b_1 = Coefficients specified in Table II 5-4 of this Chapter depending on B/l_H. However for transverse framing b_1 is to be 1.1 times the value in this table.

Table II 5-4
Values of b_0 and b_1

B/l_H	over		0.4	0.6	0.8	1.0	1.2	1.4	1.6
	less than	0.4	0.6	0.8	1.0	1.2	1.4	1.6	
b_0		4.4	3.9	3.3	2.2	1.6	-	-	-
b_1		-	-	-	2.2	2.1	1.9	1.7	1.4

(ii) $t = C'S\sqrt{Kh} + 2.5$ mm

where:

C' = Coefficient obtained by the following formula:

$0.43\frac{l}{S} + 2.5$ for $\frac{l}{S} < 3.5$

4.0 for $\frac{l}{S} \geq 3.5$

l = Distance (m) between floors for longitudinal framing or between girders for transverse framing

S = Spacing (m) of inner bottom longitudinals for bottom longitudinal framing or frame spacing for transverse framing

K = Material factor as specified in 1.5.2(a) of this Part.

h = Height (m) as specified in 5.6.4

(b) The thickness of the inner bottom plating in the engine and the boiler spaces is not to be less than that obtained from 5.7.1(a) above plus 2.0 mm or than that obtained from the requirements of 16.2.2 of this Part plus 2.0 mm in the case where the inner bottom in engine and the boiler spaces is also a tank top, whichever is greater.

5.7.2 If no ceiling is fitted and the cargo is not regularly handle by grab, then the thickness of the inner bottom plating under the hatchway is not to be less than that obtained in 5.7.1 of this Chapter plus 2.0 mm, or than that obtained from the requirements of 16.2.2 of this Part plus 2.0 mm in the case where the inner bottom is also a tank top, whichever is greater.

5.7.3 Under the boiler there is to be a clear space of at least 460 mm above the inner bottom. If the clear space is necessarily smaller, the thickness of the plating is to be suitably further increased.

5.7.4 Where the double bottom is used for carrying fuel oil for ship's used and no ceiling is fitted, the thickness of the inner bottom plating is not to be less than 10 mm in association with 760 mm frame spacing. Where the frame spacing differs from 760 mm, the thickness of the inner bottom plating is to be modified in direct proportion.

5.7.5 In ships classed with "**Ore Carrier**" notation and if cargo is to be regularly discharged by grabs or similar mechanical appliances, it is recommended that flush inner bottom plating be adopted throughout cargo spaces and double ceiling be fitted otherwise the thickness of the inner bottom plating under the hatchway is not to be less than that obtained in 5.7.1 of this Chapter plus 2.5 mm, or than that obtained from the requirements of 16.2.2 of this Part plus 2.5 mm in the case where the inner bottom is also a tank top, whichever is greater.

5.7.6 Where engine foundation plates or the thrust seat rest directly on the inner bottom plating, the thickness of the plating is to be increased in proportion to the kind, size and power of the engine and to be at least twice the thickness as given in 5.7.1(b) of this Chapter.

5.7.7 Where margin plates are approximately vertical, these plates fitted amidships are to extend for the full depth of the double bottom with a thickness as obtained from 5.7.1(a)(i) of this Chapter plus 1.5 mm. Where approximately horizontal, they may be of the thickness of the adjacent tank top plating.

5.7.8 The thickness of the margin plate is to be in no case less than that of the remainder of the plating in the corresponding location.

5.7.9 Where the inner bottom or the double bottom structure forms part of a sea chest, the thickness of the plating is not to be less than that of the shell plating in the same location, but need not exceed 25 mm.

5.7.10 The thickness of the bottom shell plating of cargo hold in way of double bottom is not to be less than that obtained from Chapter 7 of this Part, or than that from 5.7.1(a)(i) of this Chapter with C_H obtained using α from the following formula:

$$\alpha = \frac{13.8}{24 - 15.5 f_B K}$$

where:
α, f_B, K = See 5.7.1(a)(i) above.

5.8 Manholes, Lightening Holes, Air and Drainage Holes

5.8.1 Manholes

(a) A sufficient number of manholes are to be cut in the inner bottom plating, floors and side girders to provide the access to all parts of the double bottom.

(b) Care is to be taken in locating manholes to avoid the possibility of interconnection of the main subdivision compartment through the double bottom in so far as practicable.

(c) Manholes in the inner bottom plating are to have a good shift with each other in the longitudinal direction and to be minimum in number.

(d) Manholes in the inner bottom plating are to be fitted with doubling plates or rims to take fastenings of covers.

(e) Manholes in the inner bottom plating are to be fitted with steel or wrought iron covers.

(f) Where no ceiling is fitted in the cargo hold, manhole covers are to be effectively protected against damage by the cargo.

(g) Manholes are to be cut clean and without jagged edge and to a well rounded design.

(h) The position and the size of manholes cut in the center girder is to be submitted for approval by the Society.

5.8.2 Lightening holes

(a) Lightening holes are to be cut in nontight floors, side girders and brackets.

(b) The diameter of lightening holes in brackets normally is not to be greater than 1/3 of the breadth of the bracket.

5.8.3 Neither manholes nor lightening holes are to be cut in the floor or the girder under the widely spaced pillar.

5.8.4 Air and drainage holes

(a) Air and drainage holes are to be cut in non-tight floor or girders to ensure the free escape of air and drain water.

(b) The air and the drainage holes are to be cut as closely to the inner and outer bottom plating as practicable.

Chapter 6

Frames

6.1 General

6.1.1 The requirement in this Chapter apply to ships having transverse strength and transverse stiffness provided by bulkheads that are not less effective than those specified in Chapter 14. Where the transverse strength and stiffness provided by bulkheads are less effective, additional stiffening is to be made by means of increasing scantling of frames, additional provision of web frames, etc.

6.1.2 The scantlings of frames in way of deep tanks are to comply with the provisions in Chapter 16 as well as those in this Chapter.

6.1.3 Frames are not to extend through the tops of water or oil tanks, unless the effective watertight or oiltight arrangements are specially submitted and approved.

6.1.4 Where large holes are cut in the web of frames, the scantlings of the frames are to be appropriately increased.

6.1.5 Thorough consideration is to be given to the concentration of stress and other forces acting on the lower end construction of frames.

6.1.6 Frames in boiler spaces and in way of bossing

(a) In boiler spaces, the scantlings of members such as frames, web frames, and side stringers are to be appropriately increased.

(b) The construction and scantlings of frames in way of bossing are to be at the discretion of the Society.

6.1.7 Where the angle between the web of frames or stringers and shell plating is extremely small, the scantlings of frames or stringers are to be suitably increased above the normal requirements and where necessary, appropriate supports are to be provided to prevent tripping.

6.1.8 The transverse frames, side longitudinals and web frames supporting side longitudinals that are fitted at the place where the bow flare is considered to endure large wave impact pressure are to be properly strengthened and particular attention is to be paid to the effectiveness of their end connections.

6.2 Frame Spacing

6.2.1 Transverse frame spacing

(a) The standard spacing of transverse frames is obtained from the following formula:

$$s = 2\,L + 450 \text{ mm}$$

(b) Transverse frame spacing in peaks or cruiser sterns is not to exceed 610 mm.

(c) Transverse frame spacing between 0.2L from the fore end and the collision bulkhead is not to exceed 700 mm or the standard spacing specified in (a), whichever is smaller.

(d) The requirements in (b) and (c) may be modified, where structural arrangements or scantlings are suitably considered.

6.2.2 The standard spacing of longitudinal frames is obtained from the following formula:

$s = 2L + 550$ mm

6.2.3 Where the spacing of frames exceeds the standard spacing stipulated in 6.2.1 and 6.2.2 by at least 250 mm, the scantlings and structural arrangement of double bottoms and other relevant structures are to be specially considered.

6.2.4 Maximum frame spacing is recommended not to exceed 1 metre.

6.3 Transverse Hold Frames

6.3.1 Application

(a) The transverse hold frame is the frame below the lowest deck from the collision bulkhead to the after peak bulkhead including the machinery space.

(b) The provisions in 6.3.2 to 6.3.4 apply to the transverse hold frames of ships of ordinary construction.

(c) The application of these provisions to transverse hold frames of ships which have bilge hopper tanks, or which have a special construction such as a double side shell, are to be at the discretion of the Society.

(d) Special considerations are to be given to the scantlings of transverse hold frames, where the specific gravity of cargoes in the loaded hold exceeds 0.9.

6.3.2 Scantlings of transverse hold frames

(a) The section modulus of transverse hold frames between 0.15L from the fore end and the after peak bulkhead is not to be less than that obtained from the following formula:

KC_0CShl^2 cm³

where:

K = Material factor as specified in 1.5.2(a) of this Part.

S = Frame spacing, in m.

l = Vertical distance, in m, from the top of the inner bottom plating at side to the top of the deck beams above the frames.
For frames abaft 0.25L from the fore end, l is to be measured at amidships. For frames between 0.25L and 0.15L from the fore end, l is to be measured at 0.25L from the fore end. For frames that are attached to the shell that has a remarkable flare, l is to be the length of the frame between supports.
Where the length of frames is markedly different from that measured above on account of discontinuity in the lowest deck or change in the height of the double bottom, lines extended from the lowest deck or the top of the double bottom parallel to the upper deck or keel respectively are to

be taken as the lowest deck or double bottom top and *l* is to be measured at the corresponding places of measurement. See Fig. II 6-1 and Fig. II 6-2 (a) and (b).

h = Vertical distance, in m, from the lower end of *l* at the place of measurement to a point d+0.038 L' above the top of the keel. See Fig. II 6-2 (a) and (b).

L' = Length of ship, in m. However, where L exceeds 230 m, L' is to be taken as 230 m.

C_0 = Coefficient obtained from the following formula, but not to be less than 0.85.

$$1.25 - 2\frac{e}{l}$$

e = Height, in m, of the tank side bracket measured from the lower end of *l*.

C = C_1+C_2

(i) For ordinary framing systems without top side tanks,

$$C_1 = 2.1 - 1.2\frac{l}{h}$$

$$C_2 = 2.2k\alpha\frac{d}{h}$$

α = Coefficient given in Table II 6-1. For intermediate values of B/l_H, α is to be obtained by linear interpolation.

l_H = Length of hold, in m.

k = Coefficient given below according to the number of layers of deck:

= 13, for single deck systems

= 21, for double deck systems

= 50, for triple deck systems

Where B / *l* exceeds the following value according to the deck systems, the value of k is to be suitably increased:

= 2.8, for single deck systems

= 4.2, for double deck systems

= 5.0, for triple deck systems

(ii) For framing systems with top side tanks,

$$C_1 = 3.4 - 2.4\frac{l}{h}$$

$$C_2 = 2.7\alpha\frac{d}{h}$$

Where B/*l* exceeds 4.0, the value of C_2 is to be suitably increased.

Table II 6-1
Coefficient α

B / l_H	≤ 0.5	0.6	0.8	1.0	1.2	≥ 1.4
α	0.023	0.018	0.010	0.006	0.0034	0.002

(b) The section modulus of transverse hold frames between 0.15L from the fore end and the collision bulkhead is not to be less than that obtained from the following formula:

KC_0CShl^2 cm³

where:

K	=	Material factor as specified in (a) above
l	=	Vertical distance as specified in (a) above, except that it is to be measured at 0.15 L from the fore end.
S, h and C_0	=	As specified in (a) above.
C	=	Coefficient, 1.3 times the value specified in (a) above.

(c) For the frames under transverse web beams supporting deck longitudinals, the section modulus is to be obtained as in (a) and (b), but not to be taken as less than that obtained from the following formula:

$$2.4n\left[0.17+\frac{h_1}{9.81h}\left(\frac{l_1}{l}\right)^2 - 0.1\frac{l}{h}\right]KShl^2$$

where:

n	=	Ratio of transverse web beam spacing to frame spacing.
h_1	=	Deck load, in kN/m^2, stipulated in 9.2 for the deck beam at the top of frame.
l_1	=	Total length, in m, of the transverse web beam. See Fig. II 6-2 (a) of this Chapter.
K, S, l and h	=	As specified in (a) and (b) above.

(d) Where the ratio of the depth of the frame to the length measured from the deck at the top of the frame to the toe of the lower bracket is less than 1/24 for the frame prescribed in (a) and 1/22 for (b), the scantlings of such frames are to be suitably increased.

(e) Where the depth of the double bottom center girder is less than B/16, the scantlings of frames are to be suitably increased.

(f) Where long hatchways or multi-row hatchways are provided on the deck at the top of frames, special consideration is to be given to the scantlings of transverse hold frames and their upper end construction.

6.3.3 Transverse hold frames supported by web frames and side stringers

(a) Where transverse hold frames are supported by web frames and side stringers specified in Chapter 6A, the section modulus of frames is not to be less than that obtained from the following formula:

(i) For frames between 0.15L from the fore end and the after peak bulkhead:

$$2.1KCShl^2 \quad cm^3$$

(ii) For frames between 0.15L from the fore end and the collision bulkhead:

$$3.2KCShl^2 \quad cm^3$$

where:

K = Material factor as specified in 1.5.2(a) of this Part.

h = Vertical distance as specified in 6.3.2(a) of this Chapter.

l = Vertical distance as specified in 6.3.2(a) or (b) of this Chapter, as applicable. Where this distance is less than 2 metres, *l* is to be one half of the distance plus 1.0 m. See Fig. II 6-1 and Fig II 6-2 (c) of this Chapter.

C = As obtained from the following formula, but to be taken as 1.0, where C is less than 1.0:

$$C = \left[\alpha_1\left(3 - \frac{l_2}{l}\right) - \alpha_2\frac{e}{l}\right]C_4$$

l_2 = Vertical distance, in m, at side from the lowest side stringer to the one immediately above or to the deck. See Fig. II 6-2 (c) of this Chapter.

e = Height, in m, of the lower bracket measured from the lower end of *l*. However, where this height, in m, exceeds 0.25*l*, e is to be taken as 0.25*l*. See Fig. II 6-2 (c) of this Chapter.

α_1, α_2 = As specified in Table II 6-2 of this Chapter.

C_4 = As obtained from the following formula, but to be taken as 1.0 where C_4 is less than 1.0, and as 2.2 where C_4 exceeds 2.2:

$$2\frac{H}{H_0} - 1.5$$

H_0 = Vertical distance, in m, from the top of the inner bottom plate at side to the lowest deck. See Fig. II 6-2 (c) of this Chapter.

H = Vertical distance, in m, from the lower end of H_0 to the freeboard deck at side. See Fig. II 6-2 (c) of this Chapter.

(b) The scantlings of frames specified in (a) are to be as deemed appropriate by the Society if the difference between any two adjacent unsupported spans of the frames (the vertical distance between adjacent stringers or from a stringer to the end of the frame) is not less than 25% or the difference between the largest and smallest unsupported spans is not less than 50%.

(c) Where the height of lower brackets of frames is less than 0.05 times *l* specified in (a), special considerations are to be given to the scantlings of transverse hold frames and their lower end constructions.

Table II 6-2
Values of α_1 and α_2

Numbers of side stringers installed below the lowest deck	α_1	α_2
1	0.75	2.0
2	0.90	1.8
≥ 3	1.25	1.3

6.3.4 Connection of transverse hold frames

(a) Transverse hold frames are to be overlapped with tank side brackets by at least 1.5 times the depth of frame sections and are to be effectively connected thereto.

(b) The upper ends of transverse hold frames are to be effectively connected by brackets with the deck and deck beams, and where the deck at the top of frames is longitudinally framed, the upper end brackets are to be extended and connected to the deck longitudinals adjacent to the frames.

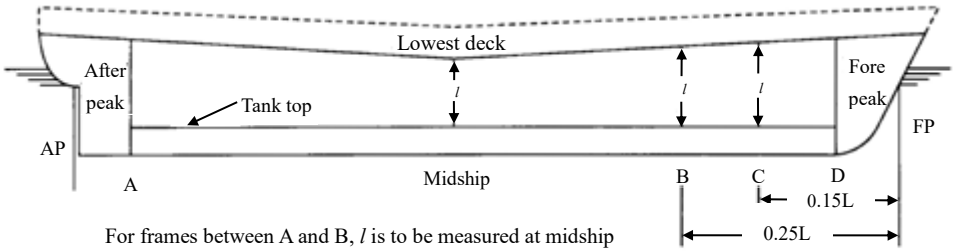

For frames between A and B, *l* is to be measured at midship
For frames between B and C, *l* is to be measured at B
For frames between C and D, *l* is to be measured at C

Fig. II 6-1
Measuring Point of *l* for Hold Frames

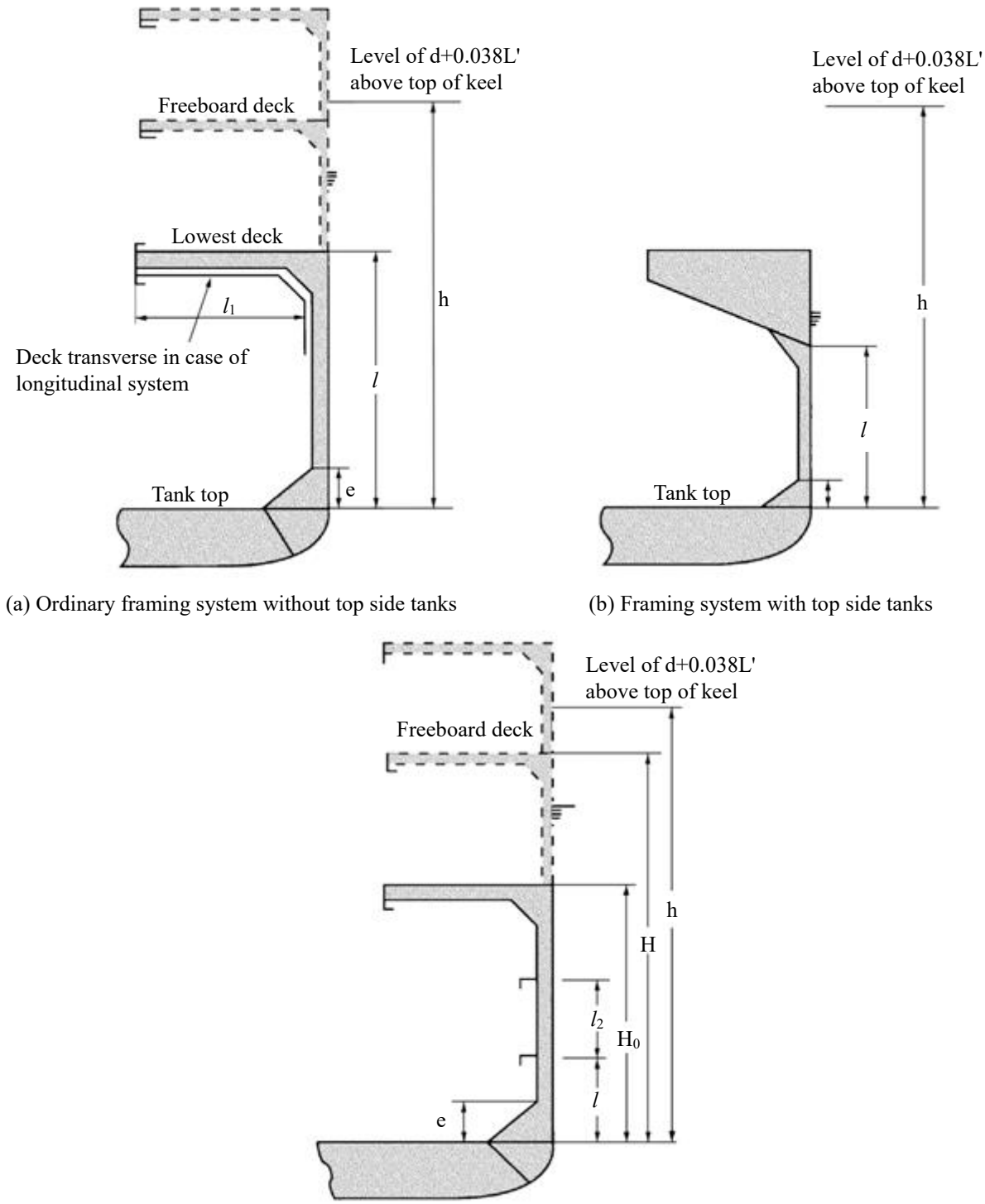

(a) Ordinary framing system without top side tanks

(b) Framing system with top side tanks

(c) Web and stringer system

Notes: e is not be more than 0.25*l*

Where *l* is less than 2.0 m, *l* is to be one half of the actual span plus 1.0 m.

Fig. II 6-2
Measurement of *l*, h, H, etc for Transverse Hold Frames

6.4 Side Longitudinals and Other Structural Members

6.4.1 Side longitudinals

(a) The section modulus of side longitudinals in the midship part below the freeboard deck is not to be less than that obtained from the following formula, whichever is greater:

$100KCShl^2$ cm^3

$2.9K\sqrt{L'}S\,l^2$ cm^3

where:

K = Material factor as specified in 1.5.2(a) of this Part.

S = Spacing, in m, of longitudinals.

l = Distance, in m, between the web frames or between the transverse bulkhead and the web frame including the length of connection.

h = Vertical distance, in m, from the side longitudinal concerned to a point d+0.038L' above the top of keel.

L' = Length of ship, in m. However, where L exceeds 230 m, L' is to be taken as 230 m.

C = Coefficient given by the following formula:

$$\frac{1}{24 - kK}$$

k = (i) or (ii) whichever is greater:

(i) $15.5\, f_B(1 - 2.5\frac{y}{D_s})$

(ii) $\frac{6}{a}$ for $L \leq 230$ m

$\frac{10.5}{a}$ for $L \geq 400$ m

Liner interpolation for intermediate L.

a = $\sqrt{K}$ if at least 80% of side shell is of high tensile steel in the transverse section at amidships.

= 1.0 for otherwise.

y = Vertical distance, in m, from the top of keel to the longitudinal under consideration.

f_B = Ratio of the section modulus of the transverse section of hull required in 3.2.2 of this Part to the actual section modulus of the transverse section of hull at bottom. However, where f_B is less than 0.85/K, it is to be taken as 0.85/K.

(b) Beyond the midship part, the section modulus of side longitudinals may be gradually reduced towards the ends of the ship, and may be 0.85 times that obtained from the formula in (a) at the ends. However, the section modulus of side longitudinals between 0.15L from the fore end and the collision bulkhead is not to be less than that obtained from the formula in (a).

(c) The depth of flat bars used for longitudinals is not to exceed 15 times the thickness of flat bars.

(d) Side longitudinals on sheer strakes in the midship part are to be of a slenderness ratio not greater than 60, as far as is possible.

(e) The section modulus of bilge longitudinals need not exceed that of bottom longitudinals.

(f) Side longitudinals are to be continuous through transverse bulkheads or to be connected thereto by brackets, so as to provide adequate fixity and continuity of longitudinal strength.

6.4.2 The web frames supporting side longitudinals are to comply with the requirements in (a) to (c).

(a) Web frames are to be arranged at sections where solid floors are provided.

(b) The scantlings of web frames are not to be less than that obtained from the following formulae:

Depth: 0.1*l*, in m, or 2.5 times the depth of the slot for longitudinals, whichever is greater.

Section modulus: KC_1Shl^2 cm^3

Thickness of web: t_1 or t_2, whichever is greater:

$$t_1 = \frac{KC_2}{1000}\frac{Shl}{d_0} + 2.5 \quad \text{mm}$$

$$t_2 = 8.6\sqrt[3]{\frac{{d_0}^2(t_1 - 2.5)}{kK}} + 2.5 \quad \text{mm}$$

where:

K	=	Material factor as specified in 1.5.2(a) of this Part.
S	=	Web frame spacing, in m.
l	=	Unsupported length, in m, of web frame.
d_0	=	Depth (m) of web frame. However, in the calculation of t_1, the depth of slots for side longitudinals, if any, is to be deducted from the web depth. Where the depth of webs is divided by vertical stiffeners, the divided depth may be taken as d_0 in the calculation of t_2.
h	=	Vertical distance, in m, from the lower end of *l* to a point d+0.038L' above the top of keel. However, where the distance is less than 1.43*l* ,in m, h is to be taken as 1.43*l*.
L'	=	As specified in 6.4.1(a) of this Chapter.
C_1, C_2	=	As specified in Table II 6-3 of this Chapter.
k	=	Coefficient given in Table II 6-4 of this Chapter according to the ratio of S_1 to d_0, where S_1 is the spacing (m) of stiffeners or tripping brackets provided on web plates. For the intermediate values of S_1/d_0, k is to be obtained by linear interpolation.

(c) Web frames are to be provided with tripping brackets at an interval of about 3 metres. Where the breadth of the face plates of web frames exceeds 180 mm on either side of the web, the tripping brackets are to support the face plates as well. Moreover, a stiffener is to be provided on the web at every longitudinal except for the middle part of the span of web frames where stiffeners may be provided at alternate longitudinals. Webs of longitudinals and web frames are to be connected to each other.

Table II 6-3
Coefficients C_1 and C_2

	For web frames abaft 0.15 L from the fore end	For web frames between 0.15 L from the fore end and the collision bulkhead
C_1	$6.6\left(1 - 0.4\frac{l}{h}\right)$	$8.6\left(1 - 0.4\frac{l}{h}\right)$
C_2	$35\left(1.43 - 0.43\frac{l}{h}\right)$	$45.5\left(1.43 - 0.43\frac{l}{h}\right)$

Table II 6-4
Coefficients k

S_1/d_0	≤ 0.3	0.4	0.5	0.6	0.7	0.8	0.9	1.0	1.5	≥ 2.0
k	60.0	40.0	26.8	20.0	16.4	14.4	13.0	12.3	11.1	10.2

6.5 Cantilever Beam Systems

6.5.1 Cantilever beams

(a) The depth of cantilever beams measured at the toe of end brackets is not to be less than 1/5 of the horizontal distance from the inboard end of the cantilever beam to the toe of the end bracket.

(b) The depth of cantilever beams may be gradually tapered from the toe of end brackets towards the inboard end where it may be reduced to about a half of the depth at the toe of the end bracket.

(c) The section modulus of cantilever beams at the toe of end brackets is not to be less than that obtained from the following formula: (see Fig. II 6-3)

$$7.1Sl_0\left(\frac{1}{2}b_1h_1 + b_2h_2\right) \qquad \text{cm}^3$$

where:

S = Cantilever beam spacing, in m.

l_0 = Horizontal distance, in m, from the inboard end of cantilever beams to the toe of end brackets.

b_1 = Horizontal distance, in m, from the inboard end of cantilever beams to the toe of end brackets of beam or transverse deck girder at side. However, where the deck is framed longitudinally and no deck transverse is provided between the cantilever beams, b_1 is to be taken as l_0.

b_2 = A half of the breadth, in m, of the hatch opening in the deck supported by the cantilever beams.

h_1 = 9.81h

Deck load, in kN/m^2, stipulated in 9.2 for the deck transverses supported by the cantilever beams.

h_2 = Load, in kN/m^2, on hatch covers of the deck supported by the cantilever beams which is not to be less than obtained from the following (i) to (iii), depending on the type of deck.

(i) For weather decks, h_2=9.81h, which is the deck load stipulated in 9.2.1 for the deck transverses or the maximum design cargo weight on hatches per unit area (kN/m^2), whichever is greater. h_2 is not to be less than 17.5 kN/m^2 for hatches at Position 1 and 12.8 kN/m^2 for those at Position 2 specified in 17.1.2, respectively.

(ii) For decks other than the weather deck where ordinary cargoes or stores are intended to be carried, h_2 is the design deck load.

(iii) For decks other than those specified in (i) or (ii) above, h_2 is the value equal to h_1.

(d) The sectional area of face plates of cantilever beams may be gradually tapered from the inner edge of end brackets towards the inboard end of cantilever beams, where it may be reduced to 0.60 times that at the inner edge of the end brackets.

(e) The web thickness of cantilever beams at any point is not to be less than the greater of the values obtained from the following formula:

$$t_1 = \frac{0.0095S\left(\frac{1}{2}b_1h_1 + b_2h_2\right)}{d_c} + 2.5 \qquad \text{mm}$$

$$t_2 = 5.8 \times \sqrt[3]{d_c^2(t_1 - 2.5)} + 2.5 \qquad \text{mm}$$

where:

S, b_1, b_2, h_1 and h_2	=	As specified in (c). However, where the deck is framed longitudinally and no deck transverse is provided between the cantilever beams, $b_1/2$ is to be substituted by the horizontal distance in metres from the inboard end of cantilever beams to the section under consideration in the formula for t_1.
d_c	=	Depth, in m, of the cantilever beam at the section under consideration. However, in the calculation of t_1, the depth of slots for deck longitudinals, if any, is to be deducted from the depth of cantilever beams. Where the webs are provided with horizontal stiffeners, the divided web depth may be used for d_c in the formula for t_2.

(f) Cantilever beams are to be provided with tripping brackets at an interval of about 3 metres. Where the breadth of the face plates of cantilever beams exceeds 180 mm on either side of the web, the tripping brackets are to support the face plates as well. Moreover, a stiffener is to be provided on the web at every longitudinal except for the middle part of the span of cantilever beams where stiffeners may be provided at alternate longitudinals.

(g) Web plates adjacent to the inner edge of end brackets are to be specially reinforced.

(h) Cantilever beams supporting hatch covers on lower decks are to comply with the requirements in (i) and (ii):

(i) The leg length of the fillet welds between webs and hatch side girders is to be Type 1 specified in Table XII 5-3, Part XII of the Rules.

(ii) Where the stiffeners are provided to prevent web plates from buckling, consideration is to be given to the arrangement of the ends of such stiffeners to ensure that there are no stress concentrations at the connections betweeen web plates and the members supporting hatch covers on lower decks.

6.5.2 Web frames

(a) The depth of web frames is not to be less than 1/8 of the length including the length of connections at both ends.

(b) The section modulus of web frames is not to be less than that obtained from the following formula. However, where a tween deck web frame in association with a cantilever beam supporting the deck above is provided at the top of the web frame, the value of the formula may be reduced to 60%.

$$7.1Sl_1\left(\frac{1}{2}b_1h_1 + b_2h_2\right) \qquad \text{cm}^3$$

where:

S	=	Web frame spacing, in m.
l_1	=	Horizontal distance, in m, from the end of supported cantilever beams to the inside of web frames
b_1, b_2, h_1 and h_2	=	As specified in 6.5.1(c) for the supported cantilever beams. However, where the deck is framed longitudinally and no deck transverse is provided between the cantilever beams, l_1 is to be substituted for b_1.

(c) The section modulus of tween deck web frames is to be in accordance with the requirements in (b), and is not to be less than that obtained from the following formula:

$$7.1C_1Sl_1\left(\frac{1}{2}b_1h_1 + b_2h_2\right) \qquad cm^3$$

where:

S, l_1, b_1, b_2, h_1 and h_2	=	As specified in (b).
C_1	=	$0.15 + 0.5\left(\dfrac{\frac{1}{2}b_1'h_1' + b_2'h_2'}{\frac{1}{2}b_1h_1 + b_2h_2}\right)$
b_1', b_2', h_1' and h_2'	=	b_1, b_2, h_1 and h_2 respectively stipulated in (b) in respect to the cantilever beams provided below the web frames concerned.

(d) The web thickness is not to be less than that obtained from the following formula, whichever is greater:

$$t_1 = 0.0095\frac{C_2S\left(\frac{1}{2}b_1h_1 + b_2h_2\right)}{d_w}\frac{l_1}{l} + 2.5 \qquad mm$$

$$t_2 = 5.8 \times \sqrt[3]{d_w^2(t_1 - 2.5)} + 2.5 \qquad mm$$

where:

S, b_1, b_2, h_1, h_2, and l_1	=	As specified in (b).
d_w	=	The smallest depth, in m, of web frame. However, in the calculation of t_1, the depth of slots for side longitudinals, if any, is to be deducted from the web depth. Where the depth of webs is divided by vertical stiffeners, the divided depth may be used for d_w in the calculation of t_2.
l	=	Length, in m, of web frame including the length of connections at both ends.
C_2	=	Coefficient given below: For hold web frames: Where a web frame in association with a cantilever beam supporting the deck above is provided directly above: 0.9 Elsewhere: 1.5 For tween deck web frames: C_1+0.6 C_1= Coefficient given by (c)

(e) Where web frames supporting cantilever beams also support side longitudinals or side stringers, the scantlings are to comply with the following requirements in addition to those in 6.4.2.

(i) The section modulus is not to be less than that obtained from the formula in (b), multiplied by the following coefficient:

Where tween deck web frame together with cantilever beam is provided above:

$$0.6 + 9.81\frac{0.05hl^2 + 0.09h_ul_u^2}{1.4\left(\frac{1}{2}b_1h_1 + b_2h_2\right)l_1}$$

Elsewhere: 1.0

where:

l	=	Length, in m, of hold web frame including the length of connections at both ends.
l_u	=	Length, in m, of tween deck web frame provided directly above, including the length of connections at both ends.
h	=	Vertical distance, in m, from the middle of l to a point d+0.038L' above the top of keel.
L'	=	Length of ship, in m. However, where L exceeds 230 m, L' is to be taken as 230 m.
h_u	=	Vertical distance, in m, from the middle of l_u to a point to which h is measured. However, where the point is below the middle of l_u , h_u is to be taken as zero.
b_1, b_2, h_1, h_2, and l_1	=	As specified in (b).

(ii) The web thickness is not to be less than that given by (d), in which the value of t_1 is to be increased by the amount obtained from the following formula:

$$0.0255\frac{\mathrm{Sh}l}{\mathrm{d_w}} \qquad \text{mm}$$

S	=	Web frame spacing, in m.
h, l	=	As specified in (i).
d_w	=	As specified in (d)

(f) Web frames are to be provided with tripping brackets at an interval of about 3 metres. Where the breadth of the face plates of web frames exceeds 180 mm on either side of the web, the tripping brackets are to support the face plates as well. Moreover, a stiffener is to be provided on the webs at every side longitudinal except for the middle part of the span of web frames where stiffeners may be provided at alternate longitudinals. Webs of longitudinals and web frames are to be connected to each other.

(g) Web frames are to be effectively connected with other web frames located beneath or solid floors so as to maintain strength continuity.

6.5.3 Cantilever beams and web frames supporting them are to be effectively connected by brackets required in (a) to (d):

(a) The radius of curvature of the free edges of brackets is not to be less than the depth of cantilever beams at the toes of brackets.

(b) The thickness of brackets is not to be less than that of the webs of cantilever beams or web frames, whichever is greater.

(c) The brackets are to be properly strengthened by stiffeners.

(d) The free edges of brackets are to have face plates of a sectional area not less than that of cantilever beams or web frames, whichever is greater, and the face plates are to be connected with those of cantilever beams and web frames.

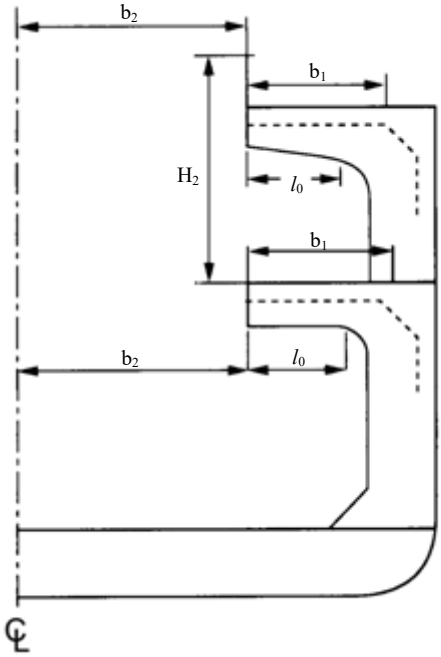

The loading height of cargo (H_2) is to be taken into consideration when h_2 of the lower deck is assumed.

Fig. II 6-3
Measurement of l_0, b_1, b_2 and H_2

6.6 Tween Deck Frames

6.6.1 General

(a) The scantlings of tween deck frames are to be determined in relation to the strength of hold frames, the arrangement and transverse stiffness of bulkheads, etc.

(b) Tween deck frames are, in association with the hold frames, to be determined in consideration of maintaining the continuity of strength of framing from the bottom to the uppermost deck.

(c) The scantlings of tween deck beams specified in 6.6 are based on the standard structural arrangement so as to maintain transverse stiffness of ships by means of efficient tween deck bulkheads provided above the hold bulkheads or by web frames extended to the top of superstructures at proper intervals.

6.6.2 Scantlings of tween deck frames

(a) The section modulus of tween deck frames below the freeboard deck is not to be less than that obtained from the following formula:

$6KShl^2$ cm^3

where:

K = Material factor as specified in 1.5.2(a) of this Part.
S = Frame spacing, in m.
l = Tween deck height, in m.
h = Vertical distance, in m, from the middle of l to the point d+0.038L' above the top of keel.

However, where h is less than 0.03L, h is to be taken as 0.03L.

L' = Length of ship, in m. However, where L exceeds 230 m, L' is to be taken as 230 m.

(b) The section modulus of tween deck frames except those specified in (a) is not to be less than that obtained from the following formula:

$KCSlL$ cm^3

where:

K = Material factor as specified in 1.5.2(a) of this Part.

S and l = As specified in (a).

C = Coefficient given in Table II 6-5 of this Chapter.

L = Length of ship, in m, as specified in 1.2.1 of this part.

(c) The scantlings of tween deck frames below the freeboard deck within 0.15L from the fore end and within 0.125L from the after end are to be appropriately increased above those given by (a) and (b).

(d) Where decks are supported by longitudinal beams and web beams, the section modulus of tween deck frames supporting web beams is not to be less than that obtained from the following formula, in addition to those in (a) and (c).

$$2.4(1 + 0.0714n\frac{h_1}{h})\,KShl^2 \qquad \text{cm}^3$$

where:

K = Material factor as specified in 1.5.2(a) of this Part.

S, h and l = As specified in (a).

n = Ratio of spacing of web beams to tween deck frame spacing.

h_1 = Deck load, in kN/m^2, stipulated in 9.2 of this Part for the deck beam at the top of frame.

Table II 6-5
Coefficients C

Description of tween deck frames	C
Superstructure frames (excluding the following two items)	0.44
Superstructure frames for 0.125L from aft end	0.57
Superstructure frames for 0.125L from fore end and cant frames at stern	0.74

6.6.3 Special precautions regarding tween deck frames

(a) Care is to be taken so that the strength and stiffness of framing at the ends of the ship may be increased in proportion to the actual unsupported length of frame as well as the vertical height of tween decks.

(b) In ships having an especially large freeboard, the scantlings of tween deck frames may be properly reduced.

6.6.4 Superstructure frames

(a) Superstructure frames are to be provided at every frame located below.

(b) Notwithstanding the requirements in 6.6.2(b), superstructure frames for four frame spaces at the ends of bridges and of detached superstructures within 0.5L amidships are to be of the section modulus obtained from the formula in 6.6.2 using 0.74 as the coefficient C.

(c) Web frames or partial bulkheads are to be provided above the bulkheads required by Chapter 15 or at other positions such as may be considered necessary to give effective transverse rigidity to the superstructures.

6.6.5 The section modulus of frames of cruiser sterns is not to be less than 0.86 times that required by 6.8.1.

6.7 Frames Below Freeboard Deck Forward of Collision Bulkhead

6.7.1 The section modulus of transverse frames below the freeboard deck is not to be less than that obtained from the following formula:

$8KSh\ell^2$ cm^3

where:

K = Material factor as specified in 1.5.2(a) of this Part.
S = Frame spacing, in m.
ℓ = Unsupported length of frame, in m, but not to be less than 2.15 metres.
h = Vertical distance, in m, from the middle of ℓ to a point 0.12L above the top of keel. However, where h is less than 0.06L, h is to be taken as 0.06L.

6.7.2 Longitudinals below the freeboard deck are to comply with the requirements in (a) and (b):

(a) The section modulus of longitudinals is not to be less than that obtained from the following formula. However, the modulus obtained from the formula is to be increased by 25% (between 0.05D and 0.15D from the top of the keel), and 50% (below 0.05D from the top of the keel).

$8KSh\ell^2$ cm^3

where:

K = Material factor as specified in 1.5.2(a) of this Part.
S = Longitudinal frame spacing, in m.
ℓ = Distance, in m, between the side transverse or between the side transverse and the transverse bulkhead. However, where ℓ is less than 2.15 metres, ℓ is to be taken as 2.15 metres.
h = Vertical distance, in m, from the longitudinals to a point 0.12L above the top of keel. However, where h is less than 0.06L, h is to be taken as 0.06L.

(b) Longitudinals are to be connected at each end to breast hooks and transverse bulkheads by efficient brackets.

6.8 Frames Below Freeboard Deck Abaft of After Peak Bulkhead

6.8.1 Transverse frames below freeboard deck

(a) The section modulus of transverse frames below the freeboard deck is not to be less than that obtained from the following formula:

$8Shl^2$ cm^3

where:

S = Frame spacing, in m.

l = Unsupported length of frame, in m.
However, where the length is less than 2.15 metres, *l* is to be taken as 2.15 metres.

h = Vertical distance, in m, from the middle of *l* to a point d+0.038L' above the top of keel.
However, where the distance is less than that 0.04L, h is to be taken as 0.04L.

(b) Where the ship speed exceeds 14 knots, the section modulus of side frames is to be increased over the value required by (a) by 2% per knot excess to a maximum of 12%.

Chapter 6A
Web Frames and Side Stringer

6A.1 General

6A.1.1 The requirements in this Chapter apply to side stringers supporting the transverse hold frames specified in 6.3.3 and the web frames supporting these side stringers.

6A.1.2 Web frames and side stringers are to be arranged to provide effective stiffness to the ship side structures.

6A.1.3 The strength of web frames and side stringers in way of deep tanks is not to be less than that required for vertical or horizontal girders on deep tank bulkheads.

6A.1.4 The side stringers supporting transverse hold frames that are fitted where the bow flare is considered to endure large wave impact pressure, and the web frames supporting these side stringers are to be properly strengthened and particular attention is to be paid to the effectiveness of their end connections.

6A.2 Web Frames

6A.2.1 Scantlings of web frames

(a) The scantlings of web frames supporting side stringers are not to be less than that obtained from the following formula:

Depth = $0.125l$, in m

Section modulus = KC_1Shl^2, in cm^3

Thickness of web = t_1 or t_2, in mm, whichever is greater:

$$t_1 = \frac{KC_2}{1000}\frac{Shl}{d_0} + 2.5 \quad \text{mm}$$

$$t_2 = 8.6\sqrt[3]{\frac{d_0^2(t_1-2.5)}{kK}} + 2.5 \quad \text{mm}$$

where:

K	=	Material factor as specified in 1.5.2(a) of this Part.
S	=	Web frame spacing, in m.
l	=	Unsupported length, in m, of web frame.
d_0	=	Depth, in m, of web frame. Where the webs are provided with vertical stiffeners, the divided web depth may be used for d_0 in the formula of t_2.
h	=	Vertical distance, in m, from the lower end of l to a point d+0.038L' above the top of keel.
L'	=	Length of ship, in m. Where, however, L exceeds 230m, L' is to be taken as 230m.
C_1 and C_2	=	As specified in Table II 6A-1 of this Chapter.
k	=	Coefficient given in Table II 6A-2 according to the ratio of S_1 to d_0, where S_1 is the spacing (m) of stiffeners or tripping brackets provided on web plates of web frames. For the intermediate values of S_1/d_0, k is to be obtained by linear interpolation.

(b) Where the web frames are in close proximity to boilers, the thickness of webs and face plates is to be suitably increased.

Table II 6A-1
Coefficients C1 and C2

	For web frames abaft 0.15 L from the fore end	For web frames between 0.15 L from the fore end and the collision bulkhead
C_1	3.0	3.8
C_2	23	28

Table II 6A-2
Coefficients k

S_1/d_0	≤ 0.3	0.4	0.5	0.6	0.7	0.8	0.9	1.0	1.5	≥ 2.0
k	60.0	40.0	26.8	20.0	16.4	14.4	13.0	12.3	11.1	10.2

6A.2.2 Stiffening of webs

(a) Stiffeners or tripping brackets are to be provided on webs of web frames as may be required.

(b) Tripping brackets are to be arranged at intervals of about 3 metres.

(c) Where the breadth of face plates on either side of the web exceeds 180 mm, tripping brackets are to be arranged to support the face plates.

6A.2.3 Below the bulkhead deck, tween deck web frames are to be provided over the hold web frames as may be required, to provide continuity of transverse strength of the web frames in holds and machinery spaces.

6A.2.4 Beams at the top of web frames are to be suitably increased in both strength and stiffness.

6A.3 Hold Side Stringers

6A.3.1 Scantlings of hold side stringers

(a) The scantlings of side stringers are not to be less than that obtained from the following formula:

Depth = $0.125l$ m

plus one quarter of the depth (m) of slot for ordinary frames.

Section modulus = KC_1Shl^2 cm^3

Thickness of web = t_1 or t_2, whichever is greater: mm

$$t_1 = \frac{KC_2}{1000}\frac{Shl}{d_0} + 2.5 \quad \text{mm}$$

$$t_2 = 8.6\sqrt[3]{\frac{d_0^2(t_1-2.5)}{kK}} + 2.5 \quad \text{mm}$$

where:

K = Material factor as specified in 1.5.2(a) of this Part.

S = Distance, in m, between the mid-points of the spaces from the side stringer concerned to the adjacent side stringers or to the top of the inner bottom plating at side or to the top of deck beams at side.

l = Web frame spacing, in m.

d_0	=	Depth of side stringer, in m. However, where the depth of the web is divided by providing a stiffener in parallel to the face plate, the divided depth may be taken as d_0 in the calculation of t_1.
h	=	Vertical distance, in m, from the middle of S to a point d+0.038L' above the top of keel. However, where h is less than that 0.05L (m), h is to be taken as 0.05L.
L'	=	Length of ship, in m. Where, however, L exceeds 230m, L' is to be taken as 230m.
C_1 and C_2	=	As specified in Table II 6A-3 of this Chapter.
k	=	Coefficient given in Table II 6A-2 of this Chapter according to the ratio of S_1 to d_0, where S_1 is the spacing (m) of stiffeners or tripping brackets provided on web plates of side stringers. For the intermediate values of S_1/d_0, k is to be obtained by linear interpolation.

Table II 6A-3
Coefficients C_1 and C_2

	For side stringers abaft 0.15L from the fore end	For side stringers between 0.15L from the fore end and the collision bulkhead
C_1	5.1	6.4
C_2	42	52

(b) In boiler spaces, the thickness of various parts of the stringer plate such as web plates and face plates are to be suitably increased.

6A.3.2 Stiffeners on webs

Stiffeners that cover the entire width of the web are to be provided on the webs of side stringers at alternate frames.

6A.3.3 Tripping brackets

(a) Tripping brackets are to be provided on side stringers at intervals of about 3 metres.

(b) Where the breadth of face plates on either side of the side stringer exceeds 180 mm, tripping brackets are to be arranged to support the face plates.

6A.3.4 Connection of side stringers to web frames

(a) Connection of side stringers to web frames is to extend for the full depth of the web frame.

(b) Where stringers are of the same depth as web frames, efficient gussets are to be used to connect the face plates of the side stringers with the face plates of the web frames.

6A.3.5 Connection of side stringers to transverse bulkhead

Brackets of a proper size are to be used to effectively connect side stringers to the transverse bulkheads.

Chapter 7
Shell Plating

7.1 General

7.1.1 Throughout this Chapter, the terms "Garboard Strake", "Sheer Strake", "Bottom Plating", "Side Plating", "Bottom Plating Forward", "End Plating" and "Superstructure Side Plating", are of the meanings as follows:

(a) The garboard strake is the first strake of plating next to a bar keel.

(b) The sheer strake is the strake of plating running alongside the strength deck.

(c) The bottom plating is the plating extending across the bottom of the ship from the keel to the upper turn of the bilge for 0.4L amidships, excluding the keel and the garboard strake.

(d) The side plating is the plating extending from the upper turn of the bilge up to the sheer strake for 0.4L amidships.

(e) The bottom plating forward is the plating on the flat of the bottom forward for 0.2L from the fore end (0.25L with machinery aft).

(f) The end plating is the shell plating for 0.1L from both ends.

(g) The superstructure side plating is the vertical plating extending from the freeboard deck to the superstructure deck.

7.1.2 The thickness of the shell plating is neither to be less than that required for purpose of longitudinal strength in accordance with Chapter 3 of this Part, nor that required by this Chapter.

7.1.3 The thickness of shell plating at such parts that the corrosion is considered excessive due to the location and/or the service condition of the ship is to be properly increased over that required in this Chapter.

7.1.4 With regard to the prevention of buckling of the shell, adequate consideration is to be given to the prevention of buckling due to compression in addition to complying with the requirements in 3.4 of this Chapter.

7.1.5 Sufficient consideration is to be made regarding the continuity in the thickness of shell plating and to the avoidance of remarkable differences between the thickness of the shell plating under consideration and that of the adjacent shell plating.

7.1.6 Where the shell plating is prone to denting due to contact with the wharf, special consideration is to be given to the thickness of the shell plating.

7.1.7 The requirements in this Chapter for side plating may be appropriately modified when the distance from the designed maximum load line to the strength deck is very large.

7.1.8 Moving parts penetrating the shell plating below the summer load draught, are to be fitted with a watertight sealing arrangement acceptable to the Society. The inboard gland is to be located within a watertight space of such

volume that, if flooded, the bulkhead deck is not to be submerged. The Society may require that if such a compartment is flooded, essential or emergency power and lighting, internal communication, signals or other emergency devices remain available in other parts of the ship.

7.2 Plate Keels

7.2.1 The breadth of the plate keel over the whole length of the ship is not to be less than that obtained from the following formula:

$2L + 1000$ mm

7.2.2 The thickness of the plate keel over the whole length of the ship is not to be less than the thickness of the bottom shell for the midship part obtained from the requirements in 7.3.4 of this Chapter plus 2.0 mm. However, this thickness is not to be less than that of the adjacent bottom shell plating.

7.3 Shell Plating below the Strength Deck

7.3.1 The minimum thickness of shell plating below the strength deck is not to be less than that obtained from the following formula:

$\sqrt{KL}$ mm

where:

K = Material factor as specified in 1.5.2(a) of this Part.

L = Length of ship, in m, as specified in 1.2.1 of this Part.

7.3.2 The thickness of side shell plating other than the sheer strake of the strength deck of the midship part is to be as required in the following (a) and (b) in addition to the requirements in 3.3.1 and 3.3.2 of this Part.

(a) In ships with transverse framing, the thickness of side shell plating is not to be less than that obtained from the following formula:

$$C_1 C_2 S \sqrt{d - 0.125D + 0.05L' + h_1} + 2.5 \quad \text{mm}$$

where:

S = Spacing of transverse frames m

L′ = Length of ship m
However, where L exceeds 230 m, L′ is to be taken as 230 m.

C_1 = Coefficient given below:
Where L is 230 metres and under: 1.0
Where L is 400 metres and over: 1.07
For intermediate values of L, C_1 is to be obtained by linear interpolation.

C_2 = Coefficient given below:

$$91 \sqrt{\frac{K}{576 - \alpha^2 K^2 x^2}}$$

where:
K = Material factor as specified in 1.5.2(a) of this Part.

α = As given in (1) or (2), whichever is greater

(1) $15.5 f_{BH}\left(1 - \frac{y}{y_B}\right)$

(2) Where L is 230 metres and under: $\frac{6}{a}$

Where L is 400 metres and over: $\frac{10.5}{a}$

For intermediate values of L, α is to be obtained by linear interpolation.

a = $\sqrt{K}$ if at least 80% of side shell is of high tensile steel in the transverse section amidships. Otherwise, a is to be 1.0.

y_B = Vertical distance from the top of keel at midship to the horizontal neutral axis of the athwartship section of hull m

y = Vertical distance from the top of keel to the lower edge of the side shell plating under consideration m

f_B = Ratio of the required hull girder section modulus as calculated in Chapter 3 when Mild steel is used to the actual hull girder section modulus at bottom.

x = As given by the following formula (hereinafter the same applies in (a):

$$\frac{X}{0.3L}$$

X = Distanceb from the fore end for side shell plating afore the midship, or from the after end for side shell plating after the midship. However, where X is less than that 0.1L, X is to be taken as 0.1L and where X exceeds 0.3L, X is to be taken as 0.3 L. m

h_1 = As given in (1) or (2) as follows.
(1) For 0.3L from the fore end:

$$\frac{9}{4}(17 - 20C_b')(1 - x)^2$$

(2) For elsewhere: 0

C_b' = Block coefficient
Where C_b exceeds 0.85, C_b' is to be taken as 0.85.

(b) In ships with longitudinal framing, the thickness of side shell plating is not to be less than that obtained from the following formula:

$$C_1C_2S\sqrt{d - 0.125D + 0.05L' + h_1} + 2.5 \quad \text{mm}$$

where:

S = Spacing of longitudinal frames m

L′ = Length of ship specified in (a) m

C_1 = Coefficient specified in (a)

h_1 = As given in (a)

C_2 = Coefficient given by the following formula:

$$13\sqrt{\frac{K}{24-\alpha Kx}}$$, but it is not to be less than $3.78\sqrt{K}$

where:

K = Material factor as specified in 1.5.2(a) of this Part.

α = Coefficient specified in (a)

x = As given in (a)

7.3.3 The thickness of sheer strakes alongside the strength deck for the midship part is not to be less than 0.75 times that of the stringer plate of the strength deck. However, the thickness is not to be less than that of the adjacent side shell plating. For a rounded sheer strake the radius is not to be less than 15 times the thickness.

7.3.4 The thickness of bottom shell plating is to be as required in (a) and (b):

(a) In ships with transverse framing, the thickness is not to be less than that obtained from the following formula:

$$C_1C_2S\sqrt{d + 0.035L' + h_1} + 2.5 \quad \text{mm}$$

where:

S	=	Spacing of transverse frames	m
L′	=	Length of ship specified in 7.3.2(a) of this Chapter	m
C_1	=	Coefficient specified in 7.3.2(a) of this Chapter	
h_1	=	Head specified in 7.3.2(a) of this Chapter	
C_2	=	Coefficient given by the following formula:	

$$\frac{91}{\sqrt{576-(15.5f_Bx)^2}}$$

f_B	=	As specified in 7.3.2(a) of this Chapter
x	=	As specified in 7.3.2(a) of this Chapter

(b) In ships with longitudinal framing, the thickness is not to be less than that obtained from the following formula:

$$C_1C_2S\sqrt{d + 0.035L' + h_1} + 2.5 \quad \text{mm}$$

where:

S	=	Spacing of longitudinal frames	m
L'	=	Length of ship specified in 7.3.2(a) of this Chapter	m
C_1	=	Coefficient specified in 7.3.2(a) of this Chapter	
h_1	=	Head specified in 7.3.2(a) of this Chapter	
C_2	=	Coefficient given by the following formula	

$$13\sqrt{\frac{K}{24-15.5\,f_BKx}}$$, but it is not to be less than $3.78\sqrt{K}$

where:
K = Material factor as specified in 1.5.2(a) of this Part.

f_B = As specified in 7.3.2(a) of this Chapter

x = As specified in 7.3.2(a) of this Chapter

7.3.5 The thickness of bilge strakes for the midship part is not to be less than that obtained from the following formula. However, it is not to be less than the thickness of adjacent bottom plating.

$$\left\{5.22\left(d + 0.035L'\right)\left(R + \frac{a+b}{2}\right)^{1.5} l\right\}^{0.4} + 2.5 \quad \text{mm}$$

where:

R = Bilge radius m

a, b = Distance from the lower and upper turns of the bilge to the longitudinal frames nearest to the turns taking the distance outward from the bilge part as positive. However, where (a + b) is negative, (a + b) is to be taken as zero. (See Fig. II 7-1 of this Chapter) m

L' = As specified in 7.3.2(a) of this Chapter

l = Spacing of solid floors, bottom transverses or bilge brackets m

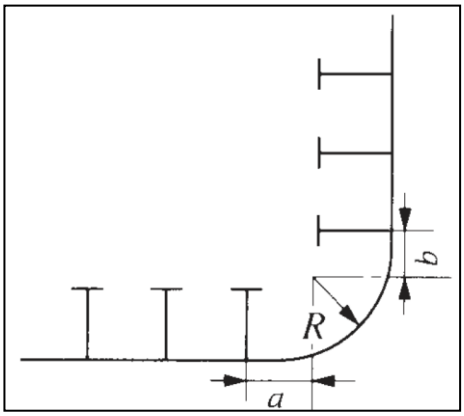

Fig. II 7-1
Measurement of a and b

Where some of the longitudinal frames at the bilge part in a longitudinal framing system are omitted, longitudinal frames are to be provided as near to the turns of the bilge as practicable and suitably constructed to maintain the continuity of strength.

Where longitudinal frames are provided at the bilge part at nearly the same spacing as that of bottom longitudinals, the bilge strakes may be in accordance with the requirements in 7.3.4 of this Chapter irrespective of the requirements in 7.3.5 of this Chapter.

Where bilge keels are fitted, special consideration is to be given to both the material and the arrangement.

7.4 Special Requirements for Shell Plating

7.4.1 Bow impact pressure

For shell plating where the bow impact pressure is assumed to be large, sufficient consideration is to be made regarding reinforcement against forces acting on the bow such as wave impact pressure.

7.4.2 Distance between frames

Where the distance between frames measured along the shell plating is remarkably different from the frame spacing, the shell plating is to be reinforced by such measures as increasing its thickness in accordance with the spacing of the frames.

7.4.3 Powerful engines

For shell plating at the aft part of ships that have especially powerful engines compared with the ship length, sufficient consideration is to be made regarding reinforcement against vibration.

7.4.4 Thickness of shell plating at the strengthened bottom forward

The thickness of shell plating at the strengthened bottom forward specified in Chapter 8 is to be as required in the following (a), (b) and (c). Where the ship has an unusually small draught at the ballast condition and has especially high speed for the ship s length, special consideration is to be given to the thickness of the shell plating.

(a) In ships having a bow draught of not more than $0.025L'$ at the ballast condition, the thickness of shell plating at the strengthened bottom forward is not to be less than that obtained from the following formula, where L' is as defined in 7.3.2 of this Chapter.

$$CS\sqrt{PK} + 2.5 \qquad \text{mm}$$

where:

C = Coefficient given in Table II 7-1 of this Chapter
For intermediate values of α, C is to be obtained by linear interpolation.

α = Value of the spacing of frames or spacing of girders or longitudinal shell stiffeners, whichever is greater divided by S

S = Spacing of frames or girders or longitudinal shell stiffeners, whichever is the smallest m

P = Slamming impact pressure specified in Chapter 8 kPa

Table II 7-1
Value of C

α	1.0	1.2	1.4	1.6	1.8	2.0 and above
C	1.04	1.17	1.24	1.29	1.32	1.33

(b) In ships having a bow draught of not less than $0.037L'$ at the ballast condition, the thickness of shell plating at the strengthened bottom forward is not to be less than that specified in 7.3.4 of this Chapter or obtained from the following formula, whichever is greater. Where L' is as defined in 7.3.2 of this Chapter.

$$1.34S\sqrt{LK} + 2.5 \qquad \text{mm}$$

where:

S = Spacing of frames or girders or longitudinal shell stiffeners, whichever is the smallest m

(c) In ships having an intermediate value of the bow draught specified in (a) and (b) above, the thickness is to be obtained by linear interpolation from the requirements in (a) and (b) above.

7.4.5 The thickness of shell plating adjacent to the stern frame or in way of spectacle bossing is not to be less than that obtained from the following formula. However, where the spacing of transverse frames in the after peak exceeds 610 mm or the length of ship exceeds 200 m, the thickness of the shell plating concerned is to be in accordance with the satisfaction of the Society.

4.5 + 0.09L mm

7.5 Side Plating in way of Superstructure

Where the superstructure deck is not designed as a strength deck, the thickness of the superstructure side plating is not to be less than that obtained from the following formula, but it is not to be less than 5.5 mm. Side plating of superstructures exceeding 0.15L in length, except for those at the end parts, is to be suitably increased in thickness. From the fore end to 0.25L abaft the fore end:

$1.15S\sqrt{L} + 2.0$ mm
Elsewhere: $0.95S\sqrt{L} + 2.0$ mm

where:
S = Spacing of longitudinal or transverse frames at the position m

7.6 Compensation at Ends of Superstructure

7.6.1 Breaks of superstructures are to be strengthened according to the following requirements in (a) to (c):

(a) Sheer strakes of the strength deck are to extend well into the superstructure and are to be increased in thickness by not less than 20% above the normal thickness for sheerstrakes at that location for an appropriate span on both sides of the superstructure end.

(b) Side plating of the superstructure is to extend to an appropriate length beyond the end of the superstructure and taper off into the upper deck sheerstrakes to avoid an abrupt change of form at the break. The thickness of side plating at the ends of the superstructure is to be 20% greater than the normal thickness of superstructure side plating and this is to be taken as the standard.

(c) For superstructures located at the bow and stern, the requirements in (a) and (b) above may be suitably modified.

7.6.2 Openings in shell

Gangway ports, large freeing ports and other openings in the shell or bulwarks are to be kept well clear of the end of superstructures. Where holes are unavoidably required in the plating, they are to be made as small as possible and to be circular or oval in form.

7.7 Local Compensation of Shell Plating

7.7.1 Openings in shell

All openings in the shell plating are to have their corners well rounded and to be compensated as necessary.

7.7.2 Sea chest

Where a sea chest is provided in the shell plating for suction or discharge, the thickness of the sea chest is not to be less than that obtained from the following formula and to be suitably stiffened so as to provide sufficient rigidity as necessary. Also, the thickness is not to be less than the required thickness of the shell plating at that location.

$\sqrt{L} + 2.0$ mm

7.7.3 Openings such as cargo ports and gangway ports are to be kept well clear of discontinuous parts in the hull construction, and the places where they are provided are to be locally compensated for so as to maintain the longitudinal and transverse strengths of the hull.

7.7.4 The shell plating fitted with hawse pipes and the plating below them is to be increased in thickness or to be doubled, and to be constructed so that their longitudinal seams are not damaged by anchors and anchor cables.

7.7.5 Cargo ports and other similar openings

(a) Cargo ports and other similar openings in the sides of ships below the freeboard deck are to be fitted with doors so designed as to ensure watertightness and structural integrity as the surrounding shell plating. Unless otherwise granted by the Society, these opening are to open outwards. The number of such openings is to be the minimum compatible with the design and proper working of the ship.

(b) Unless otherwise permitted by the Society, the lower edge of openings referred to in paragraph (a) is not to be below a line drawn parallel to the freeboard deck at side, which is at its lowest point at least 230 mm above the upper edge of the uppermost load line.

(c) Where it is permitted to arrange cargo ports and other similar openings with their lower edge below the line specified in paragraph (b), additional features are to be fitted to maintain the watertight integrity.

(d) The fitting of a second door of equivalent strength and watertightness is none acceptable arrangement. A leakage detection device is to be provided in the compartment between the two doors. Drainage of this compartment to the bilges, controlled by a readily accessible screw down valve, is to be arranged. The outer door is to open outwards.

(e) Arrangements for bow doors and their inner doors, side doors and stern doors and their securings are to be in compliance with the requirements of a recognized organization, or with the applicable national standards of the society which provide an equivalent level of safety.

7.7.6 Where side scuttles are fitted in the shell plating, the location and the size are to be clearly indicated in the plan for approval.

7.8 Openings and Breaks

7.8.1 Cargo ports and other similar openings

(a) Cargo ports and other similar openings in the sides of ships below the freeboard deck are to be fitted with doors so designed as to ensure watertightness and structural integrity as the surrounding shell plating. Unless otherwise granted by the Society, these opening are to open outwards. The number of such openings is to be the minimum compatible with the design and proper working of the ship.

(b) Unless otherwise permitted by the Society, the lower edge of openings referred to in paragraph (a) is not to be below a line drawn parallel to the freeboard deck at side, which is at its lowest point at least 230 mm above the upper edge of the uppermost load line.

(c) Where it is permitted to arrange cargo ports and other similar openings with their lower edge below the line specified in paragraph (b), additional features are to be fitted to maintain the watertight integrity.

(d) The fitting of a second door of equivalent strength and watertightness is none acceptable arrangement. A leakage detection device is to be provided in the compartment between the two doors. Drainage of this compartment to the bilges, controlled by a readily accessible screw down valve, is to be arranged. The outer door is to open outwards.

(e) Arrangements for bow doors and their inner doors, side doors and stern doors and their securings are to be in compliance with the requirements of a recognized organization, or with the applicable national standards of the society which provide an equivalent level of safety.

7.8.2 Where side scuttles are fitted in the shell plating, the location and the size are to be clearly indicated in the plan for approval.

Chapter 8

Strengthening of Bottom Structure Forward

8.1 General

8.1.1 In ships having a bow draught under 0.037L' in the ballast condition, the construction of the strengthened bottom forward is to be in accordance with the requirements in 6.8, where L' is as defined in 7.3.2.

8.1.2 In ships having an unusually small draught in the ballast condition and that have especially high speed for the ship's length, special attention is to be paid to the construction of the strengthened bottom forward.

8.1.3 In ships having a bow draught of not less than 0.037L' in the ballast condition, the construction of the strengthened bottom forward may be as specified in 5.2 to 5.6 of this Part.

8.1.4 The part of flat bottom forward from the position specified in Table II 8-1 of this Chapter as below is defined as the strengthened bottom forward.

Table II 8-1
After End of Range of Strengthened Bottom Forward

$V/\sqrt{L}$	and over		1.1	1.25	1.4	1.5	1.6	1.7
	less than	1.1	1.25	1.4	1.5	1.6	1.7	-
Position (from stem)		0.15L	0.175L	0.2L	0.225L	0.25L	0.275L	0.3L

8.1.5 Notwithstanding the requirement in 8.1.1 above, ships that have an especially small draught in ballast condition or where C_b is especially small are to have the strengthened bottom forward extended to the satisfaction of the Society.

8.2 Double Bottom Structure

8.2.1 Strengthening on the double bottom structure forward of transverse framing system is to be provided with one of the methods prescribed in the following 8.2.3 and 8.2.4 in association with the solid floor fitted on every frame.

8.2.2 Strengthening on double bottom structure forward of longitudinal framing system is to be provided in accordance with 8.2.5 hereunder in association with the solid floor fitted on the alternate frame.

8.2.3 Half height intercostal girder and intermediate frame

(a) The additional half-height intercostal girder is to be fitted with a spacing not more than 1.5 m apart and not more than 760 mm on each side of the center girder and is to be carried as far forward as practicable. The half height girder plate is to be of the thickness not less than that required for the floor in the machinery space and to be flanged on its upper edge.

(b) The intermediate frame is to be fitted between solid floors and is to extend from the center girder to the margin plate or to the first side girder outside the flat part of the bottom. The scantling of the intermediate frame is to be as required for the frame in the peak.

8.2.4 Spacing of girders

(a) Between the collision bulkhead and 0.05L abaft the after end of the strengthened bottom forward, full intercostal side girders in the bottom forward are to be so arranged that the spacing of the girders is not more than 2.3 m.

(b) Additional half-height girders or longitudinal shell stiffeners are to be fitted in the midway of the full side girder, between the collision bulkhead and 0.025L abaft the after end of strengthened bottom forward.

8.2.5 Solid floors

(a) Between the collision bulkhead and the after end of the strengthened bottom forward, solid floors are to be provided at every frame in the transverse framing system, or at least at alternate frames in the longitudinal framing system.

(b) The solid floors are to be strengthened by providing vertical stiffeners in way of half-height girders or longitudinal shell stiffeners, except where the longitudinal shell stiffeners are spaced especially close and the solid floors are adequately reinforced, the vertical stiffeners for the solid floors may be provided on alternate shell stiffeners.

8.2.6 The spacing of longitudinal frames on double bottom structure forward of longitudinal framing system is not to exceed 700 mm.

8.2.7 In ships having a bow draught of more than 0.025L′ but less than 0.037L′ in the ballast condition, where the construction and arrangement of the strengthened bottom forward are impracticable to comply with the above-mentioned requirements, suitable compensation is to be provided for the floors and side girders.

8.3 Scantlings of Longitudinal Shell Stiffeners or Bottom Longitudinals

8.3.1 In ships having a bow draught of not more than 0.025L' in the ballast condition, the section modulus of longitudinal shell stiffeners or bottom longitudinals in way of the strengthened bottom forward is not to be less than that obtained from the following formula:

$0.53P\lambda l^2$ cm³

where:

l = Spacing of solid floors m

λ = $0.774\,l$
However, where the spacing (m) of longitudinal shell stiffeners or bottom longitudinals is not more than $0.774\,l$, λ is to be taken as the spacing.

P = Slamming impact pressure obtained from the following formula: kPa

$$2.48\frac{LC_1C_2}{\beta}$$

C_1 = Coefficient given in Table II 8-2 of this Chapter
For intermediate values of $V/\sqrt{L}$, C_1 is to be obtained by linear interpolation.

C_2 = Coefficient obtained from the following formula:
Where $V/\sqrt{L}$ is 1.0 and under: 0.4

Where $V/\sqrt{L}$ is over 1.0, but less than 1.3: $0.667\frac{V}{\sqrt{L}} - 0.267$

Where $V/\sqrt{L}$ is 1.3 and over: $1.5\frac{V}{\sqrt{L}} - 1.35$

β = Slope of the ship's bottom obtained from the following formula, but C_2/β need not be taken as greater than 11.43 (See Fig. II 8-1 of this Chapter).

$$\frac{0.0025L}{b}$$

b = Horizontal distance measured in the station 0.2L from the stem, from the centre line of ship to the intersection of the horizontal line 0.0025L above the top of keel with the shell plating (See Fig. II 8-1 of this Chapter) m

Table II 8-2
Value of C_1

$V/\sqrt{L}$	1.0 and under	1.1	1.2	1.3	1.4	1.5 and above
C_1	0.12	0.18	0.23	0.26	0.28	0.29

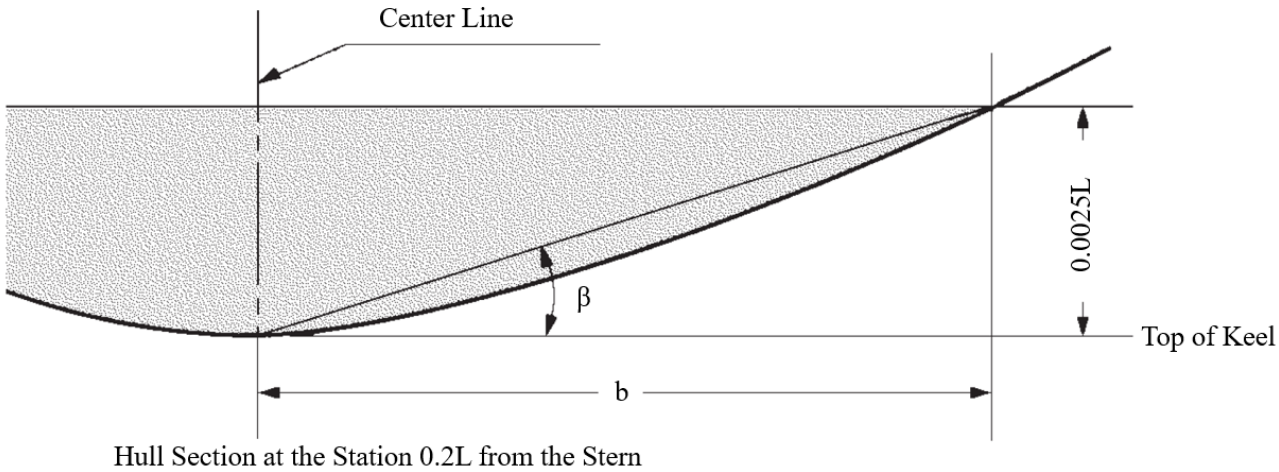

Fig. II 8-1
Measurement of b

8.3.2 In ships having a bow draught of more than 0.025L′ but less than 0.037L′ in ballast condition, the section modulus of longitudinal shell stiffeners or bottom longitudinals in way of the strengthened bottom forward is to be obtained by linear interpolation from the values given by the requirements in 8.3.1 above and 5.6 of this Part.

Chapter 9
Beams and Deck Longitudinals

9.1 General

9.1.1 Beam spacing

(a) Transverse beams are to be fitted on every frame in the following cases:
- (i) At the freeboard deck in ships exceeding 4.6 m in depth and having no deck below the freeboard deck.
- (ii) At the freeboard deck under bridge for 8 frame spacings from each end of the bridge.
- (iii) At the strength deck in ships more than 105 m in length.
- (iv) At the unsheathed strength deck.
- (v) At the unsheathed deck where the frame spacing exceeds 760 mm.
- (vi) At the tank top, tunnel top and bulkhead recess.
- (vii) At the forecastle deck for 0.125L from the fore end.

(b) Besides the cases mentioned above, transverse beams are to be fitted not more than 2 frame spacings apart.

9.1.2 Transverse beams in different tiers if fitted on alternate frames are to be fitted on the same frames.

9.2 Beams

9.2.1 The section modulus of the beam is not to be less than that derived from the following formula:

$4.8Ksh\,l^2$ cm^3

where:

K = Material factor as specified in 1.5.2(a) of this Part.
s = The spacing of the beam, in m.
l = The horizontal span, in m.
= The span between adjacent lines of girder supports, or from the inner edge of the beam knee to the nearest line of support, whichever is greater.
≥ 0.2 B, normally.
≤ 4.6 m, under the top of deep tank and in way of the bulkhead recess.

* For decks intended to carry ordinary cargoes or stores, the value of h for head (m) is to be in accordance with the following

h = The actual height, in m, as follows
= The actual height from the deck to the deck above, measured at the side of the ship, for the beam at the deck on which cargo, coal or store may be carried.
Where the cargo load differs from 7.04 kN/m^3 multiplied by the tween-deck height, in m, the height is to be proportionately adjusted.
= For bulkhead recesses and tunnel flats is the height, in m, to the bulkhead deck at the centerline; where that height is less than 6.10 m, the value of h is to be taken as 0.8 times the actual height plus 1.22 m.
= For deep-tank tops is not to be less than two-thirds of the distance from the top of the tank to the top of the overflow; it is not to be less than given in Table II 9-1/ e type of deck, appropriate to the length of the vessel, the height to the load line or 2/3 of the height to the bulkhead or freeboard deck, whichever is greatest. The section modulus is not to be less than would be required for cargo beams.

*Elsewhere for the weather deck, the value of h for head (m) may be taken from the appropriate type of decks

h = The value given in Table II 9-1 of this Chapter and the associated note, for beams at other decks than those mentioned above.

*Note: The value of h_1 for load (kN/m^2) is to be obtained by multiplying the head mentioned above by 7.

9.2.2 The size of the beam is to be suitably increased where heavy concentrated load such as at end of the deck house, in way of the mast, king post, winch, auxiliary machinery, etc. is to be carried by the beam.

9.2.3 Where no hold pillar is fitted at the hatch corner, the hatch end beam is to be in accordance with 10.5 of this Part.

9.2.4 Beams on bulkhead recesses and others

The section modulus of beams at deck forming the top of bulkhead recesses, tunnels and tunnel recesses is not to be less than that obtained from the formula in 14.2.8 of this Part.

9.2.5 Beams on top of deep tanks

The section modulus of beams at deck forming the top of deep tanks is to be in accordance with this Chapter, and not to be less than that obtained from the formula in 16.2.3 of this Part, taking the top of deep tanks as the lower end of h and beams as stiffeners.

9.3 Deck Longitudinals

9.3.1 The standard spacing of deck longitudinals is to be as given in 5.6.2 of this Part.

9.3.2 Deck longitudinals are to be supported by transverse web beams of a spacing not more than 3.6 m apart.

9.3.3 The section modulus of the deck longitudinal is to be determined by the following formula:

$CKshl^2$ cm³

where:

C = Constant as given in Table II 9-2 of this Chapter.
K = Material factor as specified in 1.5.2(a) of this Part.
s = Spacing of the deck longitudinal, in m.
h = The height as defined in 9.2.1 of this Chapter, in m.
l = The span between the web beams or between the web beam and the midpoint of end bracket, in m.

9.3.4 Continuity of deck longitudinals

(a) Deck longitudinals are to be fitted continuously through transverse web beams.

(b) Where the deck longitudinal is cut at the bulkhead, sufficient end connections are to be provided so as to effectively develop the sectional area and its resistance to bending.

9.3.5 In the part where the longitudinal system is transformed to the transverse system, care is to be taken to avoid any abrupt discontinuity.

9.4 End Attachment of Beams and Deck Longitudinals

9.4.1 Beam Knees

(a) Deck beams are to be connected to frames or stiffeners of the longitudinal bulkhead by beam knees. The scantlings of the beam knee brackets are to be obtained from the following formulae:

t_1	=	$1.26 \times \sqrt[3]{Z} + 1$	mm for plain bracket
t_2	=	$t_1 - 2$	mm for flanged bracket
t_{min}	=	6.5	mm
l	=	$50\sqrt{\frac{Z}{t_1}}$	mm
l_{min}	=	100	mm
b	=	$40 + \frac{Z}{30}$	mm

where:

t = Thickness of bracket, in mm.

Z = Section modulus of the smaller section to be connected, in cm^3.

l = Arm length, i.e. the length of the welded connection, in mm.

b = Width of flange, in mm, but is to be at least 50 mm and needed not be greater than 90 mm.

(b) For single deck ships within 0.6L amidships the arm length of the beam bracket is to be increased by 20%.

9.4.2 Longitudinally framed decks

(a) The bracket connecting the side frame to the deck clear of the transverse is to be in accordance with 9.4.1(a) above based on the modulus of the frame, but the horizontal arm of the bracket is to be extended to a longitudinal.

(b) Where the deck longitudinal is cut at the transverse bulkhead, the minimum sectional area of the bracket at the end of the longitudinal, and also the area of weld connection, are to be equal to the sectional area of the longitudinal. The area of weld connection is defined as the product of throat thickness and length of weld. The depth of the bracket below the longitudinal is to be at least equal to the depth of the longitudinal.

Table II 9-1
Height h

Type of decks	L (m)	h (m)
(a) - Exposed freeboard deck having no deck below	90 ≤ L ≤ 110	0.02 L + 0.76
	110 < L	2.90
(b) - Exposed freeboard deck having deck below - Exposed superstructure deck first above the freeboard deck for 0.25L from fore end	90 ≤ L ≤ 100	0.0029 L+ 2.0
	100 < L	2.29
(c) - Forecastle deck first above the freeboard deck - Bridge deck first above the freeboard deck - Exposed superstructure deck, over 0.1L in length first above the freeboard deck between 0.25L from fore end and 0.2L from aft end - The freeboard deck within superstructure - The deck below freeboard deck	90 ≤ L ≤ 100	0.0168 L
	100 < L ≤ 110	0.021 L-0.41
	110 < L ≤ 120	0.008 L+1.02
	120 < L	1.98
(d) - Exposed bridge deck, not over 0.1L in length first above the freeboard deck - Poop deck first above the freeboard deck - Exposed superstructure deck first above the freeboard deck for 0.2L from the aft end - Exposed superstructure deck second above the freeboard deck(1) - First tier of deck house above the freeboard deck	90 ≤ L ≤ 100	0.01 L+0.31
	100 < L ≤ 110	0.014 L-0.1
	110 < L	0.02 L-0.76
(e) - Second tier of deck house above the freeboard deck(2)	90 ≤ L ≤ 100	0.01 L+0.15
	100 < L ≤ 110	1.15
	110 < L	0.012 L-0.17
(f) - The third and higher tiers of deck house above the freeboard deck(2) - Superstructure decks (third and higher above the freeboard deck) which contain only accommodation spaces	90 ≤ L	0.91

Notes:

(1) Where the superstructure above the first superstructure extends forward of 0.5L amidships the value of h is to be suitably increased.

(2) Where the deck to which the side shell plating does not extend is generally used only as weather covering, the value of h may be reduced, but in no case is to be less than the minimum value 0.46 m.

Table II 9-2
Constant C

Type of decks	C
1. Strength deck	7.7
2. Within the line of openings at all decks	4.8
3. Effective second and third decks	7.0
4. Platform deck	4.8

Chapter 10
Deck Girders and Pillars

10.1 General

10.1.1 Deck beams are to be supported by longitudinal deck girders in association with pillars or strong hatch end beams.

10.1.2 Deck girders spacing

(a) In way of the bulkhead recess and the top of tank, deck girders are to be spaced not more than 4.6 m apart.

(b) Additional girders are to be fitted under masts, derrick posts, deck machinery or other heavy concentrated load areas.

10.1.3 The deck plating in way of the girder is to be increased in thickness or effectively stiffened where necessary to provide an effective flange of the girder.

10.1.4 Pillars in the tween deck and holds are to be in the same vertical line as far as possible.

10.1.5 Wide spaced pillars are to be fitted in line with keelsons or double bottom girders, and if infeasible, to be as close as practicable.

10.1.6 The seating under wide spaced pillars is to be of ample strength and of a character which provides effective distribution of the load.

10.1.7 Where the pillar is not directly above the intersection of the solid floor and the intercostal girder, the partial floor and intercostal girder are to be fitted to support the pillar.

10.1.8 Manholes and lightening holes are not to be cut in the floor and girder below the heel of pillars.

10.1.9 Where the heel of pillars is carried on a tunnel, suitable arrangement is to be made to support the load.

10.1.10 Additional supports are to be arranged at the end and corner of the deck house, in the machinery space, at the end of partial superstructure and under the heavy concentrated load areas.

10.2 Deck Girders Clear of Tanks

10.2.1 Scantling

(a) The section modulus is not to be less than that obtained from the following formula:

$4.8Kb\ h\ l^2$ cm^3

where:

K = Material factor as specified in 1.5.2(a) of this Part.
b = The mean breadth of the area of the deck supported, in m.
h = The height as defined in 9.2.1 of this Part, in m.
l = The span between centers of supporting pillars, or between the pillar and the center of end bracket at the bulkhead, in m.

(b) The depth of the web of the girder is not to be less than 5% of the span *l*.

(c) The thickness of web plates is not to be less than 1% of the depth plus 4 mm but is not to be less than 8.5 mm, 10 mm, 12.5 mm or 15 mm where the sectional area of face plates is 38 cm^2, 65 cm^2, 130 cm^2 or 195 cm^2 respectively. The thickness for intermediate area may be obtained by interpolation.

10.2.2 Where the girder is subjected to concentrated load such as the pillar out of line, the hanging load, etc., the section modulus is to be specially calculated.

10.2.3 Tripping brackets are to be fitted at intervals of about 3 m and near the change of section. Where the breadth of the flanges on either side of the web exceeds 200 mm, tripping brackets are to be arranged to support the flange. Additional supports are to be provided for the flanges where their breadth exceeds 400 mm.

10.2.4 The girder is to be attached to the bulkhead by flanged bracket. At the bulkhead, the stiffener is to be suitably strengthened to provide ample support to the girder.

10.3 Deck Transverses

The deck transverse supporting deck longitudinal is to be of the size obtained from the formula given in 10.2 of this Chapter, where l is the span, in m, between supporting girders, or between the girder and the ship's side deducting 1/2 the distance between the toe of the bracket and the ship's side; b is the spacing of transverse, in m; and h is the height, in m, as defined in 9.2.1 of this Part. The requirement for minimum depth and thickness of web plates and arrangement of tripping brackets are to be the same as given in 10.2 of this Part.

10.4 Hatch Side Girders

10.4.1 Scantling for hatch side girder supporting the transverse shifting beam or hatch cover is to be obtained in the same manner as the deck girder.

10.4.2 The hatch side girder along the lower deck hatch under the trunk in which no cover is fitted is to be increased in proportion to the extra load to be carried due to the loading up into the trunk.

10.4.3 Where the deep coaming is fitted above such as at weather deck, the girder below deck may be modified so as to obtain a section modulus when taken in conjunction with the coaming up to and including the horizontal coaming stiffener, of not less than that given by the following formula:

$6.5\ Kb\ h\ l^2$ cm^3

where K, *l*, b and h are as specified in 10.2.1 of this Chapter.

10.4.4 Where the hatch side girder is not continuous under the deck beyond the hatchway to the bulkhead, the bracket extending for at least 2 frame spaces beyond the end of the hatchway is to be fitted.

10.4.5 The gusset plate is to be fitted at the hatchway corner and arranged so as to effectively connect the flange of the hatch side girder and the hatch end beam.

10.5 Hatch End Beams

10.5.1 The hatch end beam supported only by a center line pillar without a pillar at the corner of the hatchway is classified into 2 cases as follows:

Case 1: Where the deck girder is not fitted on the line of the hatch side beyond the hatchway.

Case 2: Where the deck girder is fitted fore and aft beyond the hatchway.

10.5.2 The section modulus is not to be less than that derived from the following formula:

For Case 1: $K\,A\,B\,h\,l$ cm^3

For Case 2: $K\,(A\,B + C\,D)\,h\,l$ cm^3

where:

l = The distance from the center of beam bracket to the center line, in m.

A = The length of the hatchway, in m.

B = The distance from the center line to the midpoint between the hatch side and the line of the toe of the beam knee, in m.

C = The distance from a point midway between the center line and the line of hatch side to the midpoint between the hatch side and the line of the toe of beam knee; where no girder is fitted on the center line beyond the hatchway, C is equal to B, in m.

D = The distance from the hatch end beam to the adjacent hold bulkhead, in m.

h = The height as specified in 9.2.1 of this Chapter, in m.

K = $2.20 + 1.29\,(F/N)$ when $F/N \leq 0.6$

= $4.28 - 2.17\,(F/N)$ when $F/N > 0.6$

N = One-half the breadth of the vessel in way of the hatch-end beam, in m.

F = Distance from the side of the vessel to the hatch side girder, in m.

10.5.3 The depth and thickness of the hatch end beam are to be in accordance with the requirement specified in 10.2.1 of this Chapter.

10.5.4 The weather deck hatch end beam having a deep coaming above the deck for the full width of the hatchway may have the face plate area reduced from a point well within the line of the hatch side girder to approximately 50% of the required area at the center line.

10.5.5 Tripping brackets are to be fitted to hatch end beams in accordance with 10.2.3.

10.5.6 The frame in way of the hatch end beam is to be strengthened if considered necessary.

10.6 Pillars

10.6.1 The sectional area of pillars is to be determined from the following formula:

$$\frac{W}{k - \frac{nl}{r}} \qquad cm^2$$

where:

l	=	The distance from the top of the inner bottom, deck or other structure on which the pillar is based to the under side of the beam or girder supported, in m.
r	=	The least radius of gyration, in cm.
W	=	Deck load supported by the pillar, in kN.
	=	$9.81S\ b\ h + W_o$
S	=	The mean length of the area supported by the pillar, in m.
b	=	The mean width of the area supported by the pillar. Normally the minimum value of b is to be taken as 0.2 B, in m.
h	=	Deck height for the area supported as defined in the 9.2.1 of this Part, in m.
W_o	=	Deck load of the upper tween deck pillar above the lower pillar in question, as defined in 10.6.2 of this Chapter, in kN.
k	=	12.09 for mild steel
	=	16.11 for HT32
	=	18.12 for HT36
n	=	4.44 for mild steel
	=	7.47 for HT32
	=	9.00 for HT36

10.6.2 Load of upper pillar

(a) Where no pillar is fitted in the tween deck space directly above the deck supported by the pillar in question, W_o is equal to zero.

(b) Where the pillar is fitted in the tween deck space directly above the deck supported by the pillar in question, W_o is to be taken equal to W for the tween deck pillar.

(c) Where the pillar is not directly in line with those above or not on the line of the girder but which supports the load from above or the deck girder through a system of supplementary fore and aft or transverse girder, W_o is to be the actual load transmitted to the pillar in question through the system of the girder.

10.6.3 The pillar under the top of the deep tank is to be of solid section and of a size not less than that required by 10.6.1 or the sectional area required by the following formula, whichever is the greater:

$1.09\ kS\ b\ h \quad cm^2$

where:
S and b are as specified in 10.6.1 of this Part.

k	=	1.00 for mild steel
	=	0.75 for HT32
	=	0.67 for HT36
h	=	The vertical distance, in m, from the top of the tank to the load line, or to 2/3 of the depth to the freeboard or bulkhead deck, or to 1/2 of the height from the tank top to the overflow pipe, whichever is the greatest.

10.7 End Attachment of Pillars

10.7.1 Effective arrangement is to be made to distribute the load at the head and heel of the pillar.

10.7.2 Wide-spaced pillars are to bear solidly at head and heel and are to be attached by welding properly proportioned on the size of the pillar.

10.7.3 The end attachment of the pillar under bulk-head recess, tunnel top or deep tank top which may be subjected to tension load is to be efficiently welded to withstand the tension load.

Chapter 11
Decks

11.1 General

11.1.1 All ships are required to be plated over in the following portions of the deck:

(a) In way of the crown of the machinery space.

(b) In way of the top of the tank.

(c) In way of the step in the bulkhead.

11.1.2 In cases other than specified in 11.1.1 of this Chapter, the deck may be either plated throughout or fitted with the stringer and the tie plate.

11.1.3 Passability through decks by frames

(a) The frame is not to extend through the weather deck, tank top, or watertight flat, unless efficient means for watertightness is provided.

(b) Where the frame passes through other tight deck below the weather deck or the freeboard deck within superstructure which is not fully and permanently enclosed, or the bulkhead deck in a passenger ship, efficient means for watertightness is to be provided.

11.1.4 Approved deck composition may be laid on the steel deck provided that the steel deck is to be coated with a suitable material in order to prevent corrosive action and that the composition is to be effectively secured to the deck.

11.1.5 The thickness of deck plating within the midship 0.4L for ships of 90 m or more in length is neither to be less than that required to obtain the section modulus for longitudinal strength specified in Chapter 3 of this Part, nor that required by this Chapter.

11.2 Tapering of Deck Sectional Areas and Deck Transitions

11.2.1 Deck sectional areas used in the deck area and section modulus calculations are to be maintained throughout the midship 0.4L. They may be gradually reduced to 50% the normal requirement at 0.15L from the ends.

11.2.2 In way of the superstructure beyond the midship 0.4L the strength deck area may be reduced to approximately 70% of the normal requirement at that position.

11.2.3 Where effective areas in the same deck change, as in way of partial superstructures or over discontinuous decks, care is to be taken to extend the heavier plating well into the section of the ship in which the lesser requirements apply, to obtain a good transition from one arrangement to the other. Partial decks within the hull are to be tapered off to the shell by means of long brackets. Where effective decks change in level, the change is to be accomplished by a gradually sloping section or the deck material at each level is to be effectively overlapped and thoroughly tied together by diaphragms, webs, brackets, etc., in such a manner as will compensate for the discontinuity of the structure.

11.3 Plated Decks

11.3.1 If the thickness of the strength deck plating is less than that of the side shell plating, a stringer plate having the width of the sheer strake and the thickness of the side shell plating is to be fitted to strength deck.

11.3.2 Thickness of strength deck plating amidships outside line of opening

(a) The minimum thickness of the strength deck plating amidships outside line of the opening is not to be less than that obtained from the following formulae:

(i) For decks on transverse beams:

(1) $t = 0.01s + 2.3$ mm $s \leq 760$ mm
$t = 0.0066s + 4.9$ .mm $s > 760$ mm
To extend over 0.8L amidships, beyond which the thickness forward and aft is not to be less than required for forecastle and poop deck plating respectively.

(2) and $t = \frac{s(L+45.73)}{25L+6082}$ mm, which ever is greater
To extend over 0.4L amidships and tapered beyond in a manner the same as in 11.2.3 of this Chapter.
Vessels designed on still water bending moment envelope curves will be specially considered.

(ii) For decks on longitudinal beams:

(1) $t = 0.009s + 2.4$ .mm $s \leq 760$ mm
$t = 0.006s + 4.7$ .mm $s > 760$ mm
To extend over 0.8L amidships, beyond which the thickness forward and aft is not to be less than required for forecastle and poop deck plating respectively.

(2) and $t = \frac{s(L+45.73)}{26L+8681}$ mm, for $L \leq 183$ m, which ever is greater

To extend over 0.4L amidships and tapered beyond in a manner the same as in 11.2.3 of this Chapter.
Vessels designed on still water bending moment envelope curves will be specially considered.

where:

s = Beam spacing, in mm.
L = Length of ship, in m

(b) In small vessels, the minimum thickness of the deck plating outside line of the opening may be reduced to the thickness of the plating inside the line of the opening, provided that the required effective deck area is fully distributed to the thicker plate along the hatchway and the stringer plate.

11.3.3 The thickness of the strength deck plating amidships inside the line of the opening is to be obtained from the following formulae:

(a) Exposed strength deck within line of openings

$t = 0.01s + 0.9$ mm $s \leq 760$ mm
$t = 0.0067s + 3.4$ mm $s > 760$ mm

The equation above applies amidships. At the forward and aft ends, plating is to be as required for exposed forecastle and poop deck.

(b) Enclosed strength deck within line of openings

$t = 0.009s + 0.8$ mm $s \leq 760$ mm
$t = 0.0039s + 4.3$ mm $s > 760$ mm

where:

s = Beam spacing, in mm.

11.3.4 The thickness of the strength deck plating at 0.1L from the ends is not to be less than obtained from the following formula:

$t = 0.025\,L + 4.7$ mm

where:

L = Length of ship, in m.

11.3.5 The thickness of the plating of the lower deck which is designated as platform deck and considered to be non-effective deck for longitudinal strength, is not to be less than that obtained from the following formula.

(a) Platform decks in enclosed cargo spaces

$t = Ks\sqrt{h} + a$ mm , but not less than 5.0 mm
K = 0.00394
a = 1.5 mm
h = tween deck height in m

When a design load is specified, h is to be taken as p/n where p is the specified design load in kN/m^2 and n is defined as 7.04.

(b) Platform decks in enclosed accommodation spaces

t = 0.0058s + 1.0 mm, but not less than 4.5 mm

Where the platform decks are subjected to hull girder bending, special consideration is to be given to the structural stability of deck supporting members.

11.3.6 The minimum thickness of the effective lower deck plating is not to be less than the following:

(a) Second deck:

	D	> 15.2 m :	Same as 11.3.2 (a)(i)
15.2 m ≥	D	> 12.8 m :	Same as 11.3.2 (a)(ii)
	D	< 12.8 m :	Same as 11.3.3

where:
D = Depth of ship, in m.

(b) Third deck:

	D	> 17.7 m :	Same as 11.3.2(a)(i)
17.7 m ≥	D	> 13.4 m :	Same as 11.3.2(a)(ii)
13.4 m ≥	D	> 9.8 m :	Same as 11.3.3
	D	< 9.8 m :	Same as 11.3.5

where:
D = Depth of ship, in m.

11.3.7 Where the superstructure deck is not designed as the strength deck, the minimum thickness of superstructure deck plating is not to be less than that obtained from the following formulae:

(a) Forecastle and bridge deck plating:

t = 0.009 s + 2.4 mm	s ≤ 760 mm, L > 122 m
t = 0.006 s + 4.7 mm	s > 760 mm, L > 122 m
t = 0.01 s + 0.9 mm	s ≤ 760 mm, L ≤ 122 m
t = 0.0067 s + 3.4 mm	s > 760 mm, L ≤ 122 m

where:
L = Length of ship, in m.
s = Beam spacing, in mm.

(b) Poop deck plating:

$t = 0.01\ s + 0.9$ mm $s \leq 760$ mm, $L > 100$ m
$t = 0.0067\ s + 3.4$ mm $s > 760$ mm, $L > 100$ m
$t = 0.009\ s + 0.8$ mm $s \leq 760$ mm, $L \leq 100$ m
$t = 0.0039\ s + 4.3$ mm $s > 760$ mm, $L \leq 100$ m

(c) Exposed bridge deck plating:

$t = 0.01s + 0.25$ mm $s \leq 760$ mm
$t = 0.0043s + 4.6$ mm $s > 760$ mm

where
L = Length of ship, in m.
s = Beam spacing, in mm.

(d) Where the beam is fitted on every alternative frame, the thickness given in 11 3.7(a) and (b) above is to be increased by 50%.

11.3.8 Where the plated deck of the strength deck is covered by the superstructure or the deck house the minimum thickness may be reduced by 1 mm.

11.3.9 Thickness of effective deck plating under boiler, in bunker space or refrigerated space

(a) The thickness of the effective deck plating under the boiler is to be increased by 3 mm to the required thickness specified above.

(b) The thickness of the deck plating in the refrigerating space where no special means for the protection against corrosion of the deck is provided, is to be increased by 1 mm to the required thickness specified above.

11.3.10 Deck plating over deep tank, tunnel, or forming recess or step in bulkhead

(a) The deck plating over the tunnel or forming the recess or the step in the bulkhead is to be of a thickness not less than that required for the plating of the ordinary bulkhead at the same level plus 1 mm.

(b) The deck plating over the deep tank is to be of a thickness not less than that required for the plating of the deep tank bulkhead at the same level plus 1 mm.

11.4 Compensation at Opening

11.4.1 To avoid excessive local stress at the corner of the hatchway or other openings in the strength deck or the effective deck, the plating at the corner is to be well rounded with insert plates of increased thickness or other approved equivalent. Elliptical or parabolic hatch corners without insert plates of an approved design may be accepted.

11.4.2 In way of the machinery space, additional transverse strengthening is to be provided by means of web frames and strong beams, with proper pillaring or other equivalent arrangements.

11.5 Thickness of Deck Plating Loaded by Wheeled Vehicles

11.5.1 The thickness of deck plating loaded by wheeled vehicles is to be determined by considering the concentrated loads from the wheeled vehicles.

11.6 Higher-strength Material

11.6.1 In general, proposed applications of higher-strength material for decks are to be accompanied by submission of calculations in support of adequate strength against buckling. Care is to be exercised to avoid the adoption of reduced thickness of material such as might be subject to damage during normal operation.

11.6.2 The thickness of deck plating for longitudinally framed decks, where constructed of higher-strength material, is to be not less than required for longitudinal strength, nor is it to be less than obtained from the following equation.

$t_{hts} = (t_{ms} - C)K + C$ mm

where:

t_{ms} = thickness of ordinary-strength steel, in mm, as required by the Rules

C = 4.3 mm for exposed deck plating.

K = Material factor as specified in 1.5.2(a) of this Part

11.6.3 The thickness t_{hts} is also to be determined from the above equation using the t_{ms} as obtained from 11.3.2(a)(ii), with a factor of 0.92/ K in lieu of K. The factor 0.92/ K is not to be less than 1.00.

11.6.4 Where the deck plating is transversely framed, or where the Rules do not provide a specific thickness for the deck plating, the thickness of the higher-strength material will be specially considered, taking into consideration the size of the vessel, intended service and the requirements of the Rules.

Chapter 12

Superstructures and Deckhouses

12.1 General

12.1.1 All ships classed for ocean service are to have adequate bow height or deck sheer, sufficient length and height of superstructure fitted with efficient closing appliances in compliance with the requirements of International Convention on Load Line, 1966.

12.1.2 A bridge or poop is not to be regarded as enclosed unless access is provided for the crew to reach machinery and other working spaces inside these superstructures by alternative means which are available at all times when bulkhead openings are closed.

12.1.3 Superstructures with openings which do not fully comply 12.4 of this Part are to be considered as open superstructures.

12.2 Side Plating and Deck of Superstructures

12.2.1 The thickness of the side plating of the superstructure is to be determined from 7.5 and 7.6 of this Part.

12.2.2 The scantling of the superstructure deck is to be as required by 11.3.3 of this Part.

12.2.3 Superstructure Stiffeners

(a) The superstructure frame is to be of the scantling as required by 6.6 of this Part.

(b) Transverse rigidity is to be maintained by fitting with web frames or the partial bulkhead over the main bulkhead and elsewhere as may be required.

12.2.4 The break in the continuity of the superstructure is to be specially strengthened as required in 7.5 of this part.

12.3 Superstructure End Bulkheads and Deckhouse Walls

12.3.1 Stiffeners

(a) The section modulus of stiffeners, in association with the plating to which they are attached, is not to be less than that obtained from the following formula:

$3.5\ s\ h\ l^2$ $\quad$ cm^3

where:

s	=	Spacing of stiffeners, in m.
l	=	Tween deck height, in m. However, where l is less than 2 m, l is to be taken as 2 m.
h	=	a[(b f) – y]c, the design head, in m.
	=	For unprotected front bulkheads on the lowest tier, h is to be taken as not less than 2.5 +L/100 m in which L need not be taken as greater than 300 m. For all other bulkheads the minimum value of h is to be not less than one-half that required for unprotected front bulkheads on the lowest tier.
a	=	Coefficient given in Table II 12-1.

$$b = 1.0 + \left(\frac{\frac{x}{L} - 0.45}{C_b + 0.2}\right)^2 \quad \text{where } \frac{x}{L} \le 0.45$$

$$= 1.0 + 1.5\left(\frac{\frac{x}{L} - 0.45}{C_b + 0.2}\right)^2 \quad \text{where } \frac{x}{L} > 0.45$$

Table II 12-1
Values of a

Bulkhead location	Values of a
Unprotected front, lowest tier	$2.0 + \frac{L_2}{120}$
Unprotected front, 2nd tier	$1.0 + \frac{L_2}{120}$
Unprotected front, 3nd tier	$0.5 + \frac{L_2}{150}$
Protected front, all tiers	$0.5 + \frac{L_2}{150}$
Sides, all tiers	$0.5 + \frac{L_2}{150}$
Aft ends, aft of amidships, all tiers	$0.7 + \frac{L_2}{1000} - 0.8\frac{x}{L}$
Aft ends, forward of amidships, all tiers	$0.5 + \frac{L_2}{1000} - 0.4\frac{x}{L}$
Note: L_2 =Length of ship (m) need not be taken as greater than 300 m	

where:

C_b = Block coefficient at summer load waterline, based on the ship's length L not to be taken as less than 0.60 nor greater than 0.80. For aft end bulkheads forward of amidships, C_b need not be taken as less than 0.80.

x = Distance in m between the after perpendicular and the bulkhead being considered. Deckhouse side bulkheads are to be divided into equal parts not exceeding 0.15L in length and x is to be measured from the after perpendicular to the center of each part considered.

L = Length of ship, in m.

f = Coefficient given in Table II 12-2.

y = Vertical distance from the summer load waterline to the midpoint of the stiffener span, in m.

c = $0.3 + 0.7\frac{b'}{B'}$

but is not to be taken as less than 1.0 for exposed machinery casing bulkheads.

In no case is $\frac{b'}{B'}$ to be taken as less than 0.25.

b' = Breadth of deckhouse at the position being considered.

B' = Actual breadth of the ship at the freeboard deck at the position being considered.

Table II 12-2
Values of f

L (m)	f
L ≤ 150	$\frac{L\left(e^{-\frac{L}{300}}\right)}{10} - \left[1 - \left(\frac{L}{150}\right)^2\right]$
150 < L < 300	$\frac{L\left(e^{-\frac{L}{300}}\right)}{10}$
L ≥ 300	11.03

(b) Both ends of webs of lower tier bulkhead stiffeners are to be effectively welded to decks. The scantlings of stiffeners having other types of end connections are to be specially considered.

12.3.2 Thickness of plating

(a) The thickness of the plating is not to be less than that obtained from the following formula:

$t = 3s\sqrt{h}$ mm

where s and h are as defined in 12.3.1 of this Part. When determining h, y is to be measured to the middle of the plate. In no case is the thickness for the lowest tier bulkheads to be less than $5.0 + \frac{L_2}{100}$ mm. For other tier bulkheads the thickness is to be not less than $4.0 + \frac{L_2}{100}$ mm, however, not less than 5.0 mm, where L_2 need not be taken as greater than 300 m.

(b) For small coasters and fishing ships up to 40 m in length the above mentioned minimum thickness may be reduced by 0.5 mm.

12.3.3 Front end bulkheads of raised quarter deck

(a) Front end bulkheads of the raised quarter deck are to have a plating of the thickness not less than that required for the bridge front bulkhead.

(b) The size of stiffeners for the front end bulkheads are to be specially considered on the basis of the strength of the ship.

12.4 Openings in End Bulkheads of Enclosed Superstructures

12.4.1 All openings in the bulkheads of enclosed superstructures are to be provided with efficient means of closing, so that in any sea conditions water will not penetrate the ship. Openings and closing appliances are to be framed or stiffened so that the whole structure is equivalent to the unpierced bulkhead when closed.

12.4.2 Doors for access openings into enclosed superstructures are to be of steel or other equivalent material, permanently and strongly attached to the bulkhead. The doors are to be provided with gaskets and clamping devices or other equivalent arrangements, permanently attached to the bulkhead or to the doors themselves, and the doors are to be so arranged that they can be operated from both sides of the bulkhead.

12.4.3 Doors are to be opened outwards to provide additional security against the impact of the sea.

12.4.4 Except as otherwise provided in the Rules, the height of sills of access openings in bulkheads at the ends of enclosed superstructures is to be at least 380 mm above the deck.

12.4.5 Side scuttles in end bulkheads of enclosed superstructures are to be of substantial construction and provided with efficient inside dead lights (See 13.3 of this Part).

12.4.6 A bridge or poop is not regarded as enclosed unless alternate means of access is provided for the crew from any point on the exposed portion of uppermost continuous deck to reach machinery space or other working spaces within these superstructures when the bulkhead openings are closed.

12.5 Aluminum Superstructures and Deckhouses

12.5.1 Scantlings

Where deckhouses are constructed of aluminum alloys, the required plate thickness and stiffener section modulus, SM, are first to be determined as required for mild steel superstructures and deckhouses, and are then to be increased by the material factor, $(235/Y_{aw})^{0.50}$ or $235/Y_{aw}$, as indicated below.

For all deck and bulkhead plating and stiffeners, the required thickness and section modulus for aluminum alloy plate and shapes are obtained from the following equations:

Plating:

$$t_{al} = t_s \left(\frac{Y_S}{Y_{aw}}\right)^{0.5} \qquad \text{mm}$$

Stiffeners:

$$SM_{al} = \frac{Y_S}{Y_{aw}} SM_S \qquad \text{cm}^3$$

Where:

t_{al}	=	minimum thickness of aluminum plate.
t_s	=	required plate thickness for steel obtained from 12.2.2 and 12.3.2
SM_{al}	=	minimum section modulus of aluminum stiffeners.
SM_S	=	minimum section modulus of steel stiffeners, as determined from Chapter 9 and Chapter 10 for deck stiffeners and 12.3.1 for bulkhead stiffeners.
Y_S	=	235 N/mm^2
Y_{aw}	=	minimum yield strength of the welded aluminum alloy under consideration at 0.20% offset in N/mm^2

In addition, the aluminum stiffeners are to have a depth not less than that given below:

$$d_{al} = 3SM_S \frac{d_S}{SM_{al}}$$

where

d_{al}	=	minimum required depth for aluminum stiffeners.
d_S	=	minimum required depth for steel stiffeners; not to be less than 100 mm depth for fronts and 80 mm for sides and ends.

Chapter 12A

Helicopter Decks and Facilities

12A.1 General

12A.1.1 The structure of the helicopter deck is to be designed to suit landing of the largest type of helicopter intended to use.

12A.1.2 Ships with helicopter decks built in accordance with these rules are to be assigned a class notation "Helideck" affixed to classification symbols, which is classified into four classes: **Helideck-I**, **Helideck-II**, **Helideck-III** and **Helideck-IV**.

12A.1.3 Class notation **Helideck-I** requires compliance with the requirements given in 12A.1, 12A.2, 12A.3 and 12A.4.

12A.1.4 Class notation **Helideck-II** requires compliance with the requirements given in 12A.5, in addition to the requirements for **Helideck-I**.

12A.1.5 Class notation **Helideck-III** requires compliance with the requirements given in 12A.6, in addition to the requirements for **Helideck-II**.

12A.1.6 Class notation **Helideck-IV** requires compliance with the requirements given in 12A.7, in addition to the requirements for **Helideck-III**.

12A.1.7 Details of the helicopter types to be used are to be included in the Loading Manual (See 3.1.2), and be contained in a notice displayed on the helicopter landing deck.

12A.1.8 The attention of owners, builders and designers is drawn to various international and governmental regulations and guides regarding the operational and other design requirements for helicopters landing on ships.

12A.1.9 Construction of helicopter decks

(a) Steel or other equivalent material

In general, the construction of the helicopter decks is to be of steel or other equivalent materials. If the helicopter deck forms the deckhead of a deckhouse or superstructure, is to be insulated to "A-60" class standard.

(b) Aluminium or other low melting point metals

If helicopter deck of aluminium or other low melting point metal construction that is not made equivalent to steel, the following provisions are to be satisfied:

(i) If the platform is cantilevered over the side of the ship, after each fire on the ship or on the platform, the platform is to undergo a structural analysis to determine its suitability for further use; and

(ii) If the platform is located above the ship's deckhouse or similar structure, the following conditions are to be satisfied:

(1) The deckhouse top and bulkheads under the platform are to have no openings;

(2) Windows under the platform are to be provided with steel shutters; and

(3) After each fire on the platform or in close proximity, the platform is to undergo a structural analysis to determine its suitability for further use.

12A.1.10 Definition

(a) Helicopter deck is a purpose built helicopter landing area located on a ship including all structure, fire-fighting appliances and other equipment necessary for the safe operation of helicopters.

(b) Helicopter facility is a helicopter deck including any refueling and hangar facilities.

(c) Helicopter landing area means an area on a ship designed for emergency landing of helicopters.

12A.2 Plans

12A.2.1 Plans showing the arrangement, scantlings, and details of the helicopter deck are to be submitted.

12A.2.2 The type, size and weight of helicopters to be used, the predetermined position used for accommodating the secured helicopter and the locations of deck fittings for securing the helicopter as well as the overall size of the helicopter deck and the designated landing area are to be shown.

12A.2.3 Where aluminium alloy platforms are connected to steel structures, details of the arrangements in way of the bimetallic connections are to be submitted.

12A.3 Structural Strength

12A.3.1 Steel decks

The deck plate thickness, t, within the landing area is to be not less than that obtained from the following formula:

$$t = \frac{\alpha s}{1000\sqrt{k}} + 1.5 \qquad \text{mm}$$

where:

α	=	Thickness coefficient, obtained from Fig. II 12A-1.
s	=	As shown in Fig. II 12A-1.
k	=	$\frac{235}{\sigma_0}$ or 0.66, whichever is the greater.
σ_0	=	Specific minimum yield stress in N/mm^2.
β	=	Tyre print coefficient, used in Fig. II 12A-1.
	=	$\log_{10}\left(\frac{2.5\lambda_1\lambda_2\lambda_3\gamma f P_w k^2}{s^2} \times 10^7\right)$
f	=	1.15 for landing decks over manned spaces, e.g., deckhouse, bridges, control rooms, etc.;
	=	1.0 elsewhere.
P_w	=	Landing load, on the tyre print in tonnes;
	=	The maximum all up weight of the helicopter divided equally between the two main undercarriages for helicopter with a single main rotor, in ton.
	=	The maximum all up weight of the helicopter distributed between all main undercarriages in proportion to the static loads they carry for helicopter with tandem main rotors, in tones.
γ	=	A location factor given in Table II 12A-1.

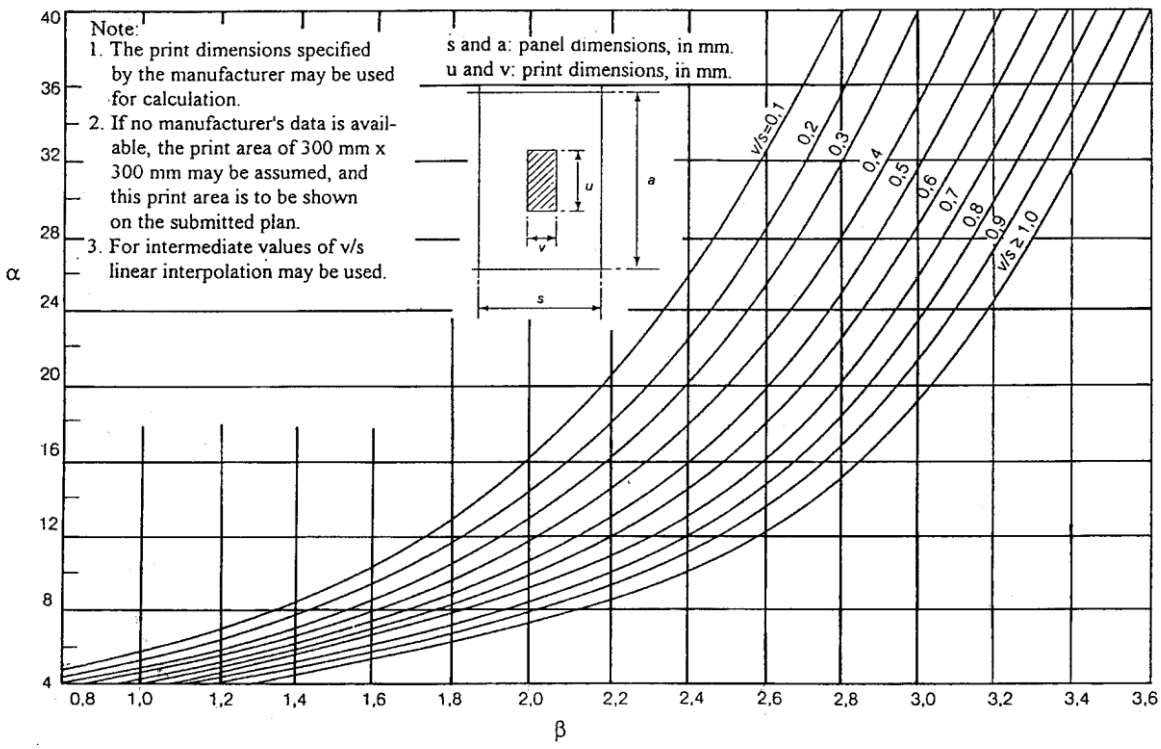

Fig. II 12A-1
Tyre Print Curves

Table II 12A-1
Location Factor

Location		γ
On decks forming part of the hull girder	within 0.4 L amidships	0.71
	at the F.P. or A.P.	0.6
Elsewhere		0.6
Note: Value for intermediate locations on decks forming part of the hull girder between ship ends and 0.4 L amidships are to be obtained by interpolation.		

where:

λ_1 = Patch aspect ratio correction factor;

$= \dfrac{2v + 1.1s}{u + 1.1s}$ for $v \le s$ and $u \le a$.

λ_2 = Panel aspect ratio correction factor;

$= 1.0$ for $u \le (a - s)$

$= \dfrac{s}{1.3s - 0.3(a - u)}$ for $a \ge u > (a - s)$

$= \dfrac{0.77a}{u}$ for $u > a$

λ_3 = Wide patch load factor;

$= 1.0$ for $v < s$

$= 0.6\dfrac{s}{v} + 0.4$ for $1.5 > \dfrac{v}{s} \ge 1.0$

$= 1.2\dfrac{s}{v}$ for $\dfrac{v}{s} \ge 1.5$

12A.3.2 Aluminium decks

(a) The plate thickness for aluminium decks, t_a is to be not less than that obtained from the following formula:

$t_a = 1.4\,t + 1.5$ mm

where:

t = The steel thickness defined in 12A.3.1.

(b) The air gap between the deckhouse top and the underside of the helicopter deck is to be at least 1 m.

(c) There are no openings in the deckhouse top and in the exterior bulkheads both directly below the helicopter decks.

(d) All windows in the lower exterior bulkheads are to be fitted with steel shutters.

12A.3.3 Deck stiffening and supporting structure

The helicopter deck stiffening and the supporting structure for helicopter platforms is to be designed on the basis of the following load cases given in Table II 12A-2 in association with the permissible stresses given in Table II 12A-3.

Table II 12A-2
Design Load Cases for Deck Stiffening and Supporting Structure

Load case	Loads			
	Supporting structure		Landing area(1)	
	Self weight	Horizontal load(2)	Uniformly distributed vertical load over entire landing area, kN/m^2	Helicopter(2)
1. Overall distributed loading	–	–	2	–
2. Helicopter emergency landing	W	0.5 P	0.5	2.5 P_wf
3. Normal usage	W	0.5 P + 0.5 W	0.5	1.5 P_w

Notes:

(1) For the design of the supporting structure for helicopter platforms applicable self weight and horizontal loads are to be added to the landing area loads.

(2) The helicopter is to be so positioned as to produce the most severe loading condition for each structural member under consideration.

(3) f = As defined in 12A.3.1.
W = The structural weight of helicopter platform, in ton.
P = The maximum all up weight of the helicopter, in ton.
P_w = As defined in 12A.3.1.

Table II 12A-3
Permissible Stresses for Deck Stiffening and Supporting Structure

Load case (See Table II 12A-2)	Permissible stresses (N/mm^2)			
	Deck secondary structure (Beams, longitudinals)	Primary structure (transverses, girders, pillars, trusses)		All structure
	Bending		Combined bending and axial	Shear
1. Overall distributed loading	$\frac{147}{K}$	$\frac{147}{K}$	$0.6\ \sigma_c$	$\frac{\text{Bending stress}}{\sqrt{3}}$
2. Helicopter emergency landing	$\frac{245}{K}$	$\frac{220.5}{K}$	$0.9\ \sigma_c$	
3. Normal usage	$\frac{176}{K}$	$\frac{147}{K}$	$0.6\ \sigma_c$	

Notes:
(1) K = Material factor;
= k for steel (See 12A.3.1);
= Ka for aluminium alloy (See 12A.3.4).
(2) σ_c = Yield stress, 0.2% proof stress or compressive buckling stress, whichever is lesser, in N/mm^2.
(3) For strength deck longitudinals and girders the permissible bending stresses are to be reduced as follows:
(a) within 0.4 L of amidships- by 30%.
(b) at F.P. and F.P.- by 0%.
Values at intermediate locations are to be calculated by interpolation between (a) and (b).
(4) When determining bending stresses in secondary structure for compliance with the above permissible stresses, 100% end fixity may be assumed.

12A.3.4 The minimum moment of inertia, I, of aluminium secondary structure stiffening is to be not less than that obtained from the following formula:

$$I = \frac{5.25Zl}{K_a} \qquad cm^4$$

where:
Z = The required section modulus of the aluminium stiffener and the attached plating, in cm^3.
l = Effective length of the stiffening member measured between span points, in m.
K_a = $\frac{245}{\sigma_a}$
σ_a = Yield stress, 0.2% proof stress or 70% of the ultimate strength of the material, whichever is lesser, in N/mm^2.

12A.4 Arrangements

12A.4.1 The landing area is to be sufficiently large to allow for the landing and maneuvering of the helicopter.

(a) For helicopter landing areas located amidships, across ship obstacle free sectors of 210° is to be provided. These sectors is to originate at the most forward and aft points on the periphery of the "D" reference circle ("D" is the actual value of diameter in metres of the helicopter deck) and diverge at 15° forward and 15° aft relative to straight transverse lines.

(b) For location at ship's ends, a free approach and take-off sector of at least 210° is required.

(c) For any helicopter landing areas amidships located adjacent to the ship's side with one-sided approach, the obstacle free sector is to originate at the most forward and aft points on the periphery of the "D" reference circle and diverge to achieve 1.5 D at the ship's side.

12A.4.2 Suitable arrangements are to be made to minimize the risk of personnel or machinery sliding off the landing area.

12A.4.3 The helicopter deck is to have a non-slip surface.

12A.4.4 Tie-down points

(a) Helicopter decks are to have tie-down points for lashing of the helicopter. The tie-down points are not to protrude above the level of the helicopter deck.

(b) The breaking load of the tie-down points for helicopters calling at the vessel is to be confirmed from helicopter operator or manufacturer.

(c) Tie-down points located on helicopter decks are to be flush fitted.

12A.4.5 Means of escape

(a) A helicopter deck is to be provided with both a main and an emergency means of escape and access for fire fighting and rescue personnel. These are to be located as far apart from each other as is practicable and preferably on opposite sides of the helicopter deck.

12A.4.6 Drainage facilities

(a) Drainage facilities in way of helicopter decks are to be constructed of steel and are to lead directly overboard independent of any other system and are to be designed so that drainage does not fall onto any part of the ship.

12A.4.7 Fire-fighting appliances

(a) In close proximity to the helicopter deck, the following fire-fighting appliances are to be provided and stored near the means of access to that helicopter deck:

(i) at least two dry powder extinguishers having a total capacity of not less than 45 kg;

(ii) carbon dioxide extinguishers of a total capacity of not less than 18 kg or equivalent;

(iii) a suitable foam application systemm, with the requirements of IMO MSC.1/Circ.1431 consisting of monitors or foam making branch pipes capable of delivering foam to all parts of the helicopter deck in all weather conditions in which helicopters can operate. The system is to be capable of delivering a discharge rate as required in Table II 12A-4 for at least five minutes;

Table II 12A-4
Foam Discharge Rates

Category	Helicopter overall length	Discharge rate foam solution (*l*/min.)
H1	up to but not including 15 m	250
H2	from 15m up to but not including 24 m	500
H3	from 24m up to but not including 35 m	800

(iv) the principal agent is to be suitable for use with salt water, and a type deemed as appropriate by the Society.

(v) at least two nozzles of an approved dual-purpose type (jet/spray) and hoses sufficient to reach any part of the helicopter deck.

(vi) in addition to the requirements of SOLAS Reg. II-2/10.10, two sets of fire-fighter's outfits; and

(vii) at least the following equipment is to be stored in a manner that provides for immediate use and protection from the elements:

(1) adjustable wrench;

(2) blanket, fire resistant;

(3) cutters, bolt 60 cm;

(4) hook, grab or salving;

(5) hacksaw, heavy duty complete with 6 spare blades;

(6) ladder;

(7) lift line 5 mm diameter × 15 m in length;

(8) pliers, side cutting;

(9) set of assorted screwdrivers; and

(10) harness knife complete with sheath.

12A.5 Additional Requirements for Helideck-II

12A.5.1 Communication

(a) Helicopter and vessel shall communicate through a VHF installation, maritime or aeromobile.

(b) A portable VHF apparatus with earphones is to be available. Three-way communication between helicopter, helicopter deck and bridge is to be possible.

12A.6 Additional Requirements for Helideck-III

12A.6.1 Marking of helicopter deck

(a) Obstacles, which the helicopter operator should be especially aware of, are to be painted in diagonal stripes of contrasting colors.

(b) The perimeter of the helicopter deck is to be marked with a 300 mm white line. The preferred colour of deck within perimeter line is dark grey or dark green.

(c) The name of the vessel is to be marked on the helicopter deck surface between the origin of the obstacle-free sector and the aiming circle in symbols not less than 1200 mm high and in a colour which contrasts to the helicopter deck surface.

(d) Obstacle-free sector is to be marked on the helicopter deck by a black chevron, each leg being 790 mm long and 100 mm wide. The chevron is to delineate the separation of the 210º obstacle-free sector and the 150º limited obstacle sector.

(e) The actual D-value of the helicopter deck is to be painted in white colour around the perimeter of the helicopter deck with symbol of 600 mm height and rounded down to the nearest whole number.

(f) The maximum allowable mass is to be marked on the helicopter deck in a position that is readable from the preferred final approach direction and consist of a two-or three-digit number expressed to one decimal place rounded to the nearest 100 kg and followed by the letter "t". The height of the numbers is to be 900 mm with a line width of 120 mm.

(g) An aiming circle, which is to be a 1000 mm yellow line with inner diameter 0.5D.

(h) A letter "H" is to be painted 4 × 3 m of 750 mm white lines located in the centre of the aiming circle.

(i) A signal flag to alert approaching helicopters that landing is prohibited in case the helicopter deck for technical reasons can not be used is to be carried onboard. This shall be a red flag 4000 × 4000 mm with yellow diagonal cross that can be laid above the "H" inside of the aiming circle.

12A.6.2 Height of obstacles

(a) The landing area is to be as flush as possible to avoid damage on skids, wheels or pontoons.

(b) Steel or other solid construction at perimeter may extend 50 mm above deck level.

(c) In the approach sector, on and outside of perimeter, only aids essential to helicopter operations are allowed to extend up to a maximum height of 250 mm, e.g. landing lights, floodlights, foam monitors, outer edge of safety net and similar arrangements.

(d) In bow or stern located helicopter landing areas, outside the obstacle free sector, obstacle heights is to be limited to 0.05 D to a distance 0.62 D from the centre of the landing area and thence are required to be below a rising plane of 1:2 to a distance of 0.83 D from the centre of the landing area.

(e) Forward and aft of the approach sector of a flight channel across the ship, within a length equal to helicopter overall length forward and aft of sector, obstacles are required to be below a plane with 1:5 longitudinal inclination.

(f) For helicopter landing areas located adjacent to the ship's side, outside the obstacle free sector, obstacles is to be limited to a height of 0.05 D for a distance of 0.25 D from the edge of the obstacle free sector and the landing area.

12A.6.3 Wind direction indicator is to be provided so as to indicate the clear area wind condition representative for the helicopter deck.

12A.6.4 Special requirements for night operation

(a) Floodlights are to be arranged for illumination of the total landing area, with care not to dazzle the pilot.

(b) Green lights are to be fitted on the perimeter line, maximum 3 m apart. The intensity of lighting is to be 30 candela. The lighting is not to be visible below the helicopter deck level.

(c) Floodlights, perimeter lights, and obstruction lights are to have electric power fed from emergency and transitional source of power in compliance with the requirements in Chapter 11, Part VII of the Rules. The transitional power is to last for at least 30 min. The system is also to have a supply circuit from main power so that a single failure in either the main electric power distribution system or the emergency power distribution system is not to render the helicopter deck lighting inoperable. Floodlights, perimeter lights, and obstruction lights are to have individual protected distribution circuits.

(d) The wind indicator is to be illuminated.

(e) All obstacles, which may obstruct the landing approach are to be indicated by red obstruction lights visible from all directions, or floodlighting or a combination of both.

12A.6.5 Instrumentation

(a) Wind velocity and direction, barometric pressure, vessel's roll and pitch are to be recorded and communicated to helicopter before landing. Simple instruments for this purpose are to be available.

12A.7 Additional Requirements for Helideck-IV

12A.7.1 Helicopter refueling and hangar facilities

The class notation **Helideck-IV** requires the ship having helicopter refueling and hangar facilities in compliance with the following requirements:

(a) A designated area is to be provided for the storage of fuel tanks which is to be:

(i) as remote as is practicable from accommodation spaces, escape routes and embarkation stations; and

(ii) isolated from areas containing a source of vapour ignition;

(b) The fuel storage area is to be provided with arrangements whereby fuel spillage may be collected and drained to a safe location;

(c) Tanks and associated equipment are to be protected against physical damage and from a fire in an adjacent space or area;

(d) Where portable fuel storage tanks are used, special attention is to be given to:
(i) design of the tank for its intended purpose;
(ii) mounting and securing arrangements;
(iii) electric bonding; and
(iv) inspection procedures;

(e) Storage tank fuel pumps are to be provided with means which permit shutdown from a safe remote location in the event of a fire. Where a gravity fuelling system is installed, equivalent closing arrangements are to be provided to isolate the fuel source;

(f) The fuel pumping unit is to be connected to one tank at a time. The piping between the tank and the pumping unit is to be of steel or equivalent material, as short as possible, and protected against damage;

(g) Electrical fuel pumping units and associated control equipment are to be of a type suitable for the location and potential hazards;

(h) Fuel pumping units are to incorporate a device which will prevent over-pressurization of the delivery or filling hose;

(i) Equipment used in refueling operations is to be electrically bonded;

(j) "NO SMOKING" signs are to be displayed at appropriate locations;

(k) Hangar, refueling and maintenance facilities are to be treated as category ‘A’ machinery spaces with regard to structural fire protection, fixed fire-extinguishing and detection system requirements;

(l) Enclosed hangar facilities or enclosed spaces containing refueling installations are to be provided with mechanical ventilation, as required by 13.3.2, Part IX of the Rules, for closed ro/ro spaces of cargo ships. Ventilation fans are to be of non-sparking type; and

(m) Electric equipment and wiring in enclosed hangar or enclosed spaces containing refueling installations are to comply with 13.3.2, Part IX of the Rules.

Chapter 13

Bulwarks, Freeing Ports, Side Scuttles, Shell Doors and Gangways

13.1 Bulwarks and Guardrails

13.1.1 Guard rails or bulwarks are to be fitted around all exposed decks. The height of the bulwarks or guard rails is to be at least 1 m from the deck, provided that where this height would interfere with the normal operation of the ship, a lesser height may be approved, if complying with the requirements of the Administration and the Society is satisfied that adequate protection is provided.

13.1.2 Bulwark constructions

(a) Bulwarks are to be of ample strength in proportion to the height and stiffened at the upper edge and supported by the stay from the deck. Bulwarks are not to be cut for a gangway or other openings near breaks of superstructures, and also to be arranged to ensure their freedom from main structural stresses. Generally the bulwark is not to be welded to the top of sheer strake within 0.5L amidships.

(b) Thickness of plate bulwarks
   (i) The thickness of plate bulwarks of ordinary height on the freeboard deck is generally not to be less than 6 mm.
   (ii) Bulwarks in way of the mooring pipe, cargo gear fittings, deck cargo lashing fittings, etc., the plating is to be suitably increased or doubled and adequate stiffened.
   (iii) The thickness of plate bulwarks at the break of the superstructure is to be modified in accordance with 7.5 of this Part.

(c) Bulwark stays
   (i) Stays on bulwarks are not to be spaced more than 1.8 m apart.
   (ii) Stays on bulwarks which are designed to subject timber deck cargoes is not to be spaced more than 1.5 m apart.

13.1.3 Guard rails fitted on superstructure and freeboard decks are to have at least three courses. The opening below the lowest course of the guard rails is to not exceed 230 mm. The other courses are to be not more than 380 mm apart. In the case of ships with rounded gunwales the guard rail supports are to be placed on the flat of the deck. In other locations, guardrails with at least two courses are to be fitted. Guard rails are to comply with the following provisions:

(a) Fixed, removable or hinged stanchions are to be fitted about 1.5 m apart. Removable or hinged stanchions are to be capable of being locked in the upright position;

(b) At least every third stanchion is to be supported by a bracket or stay;

(c) Where necessary for the normal operation of the ship, steel wire ropes may be accepted in lieu of guard rails. Wires are to be made taut by means of turnbuckles; and

(d) Where necessary for the normal operation of the ship, chains fitted between two fixed stanchions and/or bulwarks are acceptable in lieu of guard rails.

13.1.4 A bracket type is recommended for the lower connections of bulwark stays (See Fig. II 13-1 as below). In cases where a gusset type is applied for the lower connections of bulwark stays (See Fig. II 13-1 as below), special consideration is to be given.

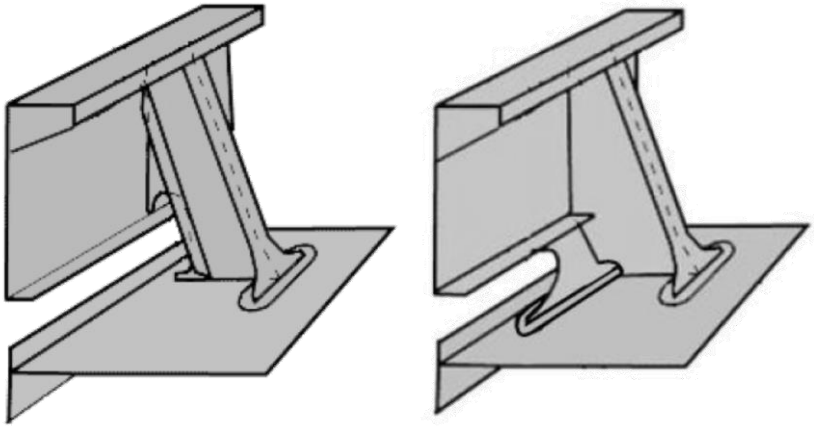

Fig. II 13-1
Example of Bracket Type (Left) and Example of Gusset Type (Right)

13.1.5 In cases where a bracket type is applied for the lower connections of bulwark stays, the bulwark stays are to be properly stiffened for the prevention of local buckling.

13.1.6 Expansion joints are to be provided at appropriate intervals in bulwarks.

13.1.7 The plating of bulwarks in way of mooring pipes is to be doubled or increased in thickness.

13.1.8 At ends of superstructures, the bulwark rails are to be bracketed either to the superstructure end bulkheads or to the stringer plates of the superstructure decks; or other equivalent arrangements are to be made so that an abrupt change of strength may be avoided.

13.1.9 Where bulwarks are cut to form gangways or other openings, stays of increased strength are to be provided at the ends of the openings.

13.2 Freeing Ports

13.2.1 Freeing ports

(a) Where bulwarks on the weather portions of freeboard or superstructure decks form wells, ample provision is to be made for rapidly freeing the decks of water and for draining them.

(b) Except as provided in paragraphs 13.2.1(c) and 13.2.2, the minimum freeing port area (A) on each side of the ship for each well on the freeboard deck is to be that given by the following formulae in cases where the sheer in way of the well is standard or greater than standard.

The minimum area for each well on superstructure decks is to be one-half of the area given by the following formulae:

Where the length of bulwark (l) in the well is 20 m or less:

$$A = 0.7 + 0.035l \quad m^2$$

where l exceeds 20 m:

$$A = 0.07l \quad m^2$$

l need in no case be taken as greater than $0.7L_f$.

If the bulwark is more than 1.2 m in average height, the required area is to be increased by 0.004 m^2 per metre of length of well for each 0.1 m difference in height. If the bulwark is less than 0.9 m in average height, the required area may be decreased by 0.004 m^2 per m of length of well for each 0.1 m difference in height.

(c) In ships with no sheer, the area calculated according to 13.2.1(b) is to be increased by 50%. Where the sheer is less than the standard, the percentage is to be obtained by linear interpolation.

(d) On a flush deck ship with a deckhouse amidships having a breadth at least 80% of the beam of the ship and the passageways along the side of the ship not exceeding 1.5 m in width, two wells are formed. Each is to be given the required freeing port area based upon the length of each well.

(e) Where a screen bulkhead is fitted completely across the ship at the forward end of a midship deckhouse, the exposed deck is divided into tow wells and there is no limitation on the breadth of the deckhouse.

(f) Wells on raised quarterdecks are to be treated as being on freeboard decks.

(g) Gutter bars greater than 300 mm in height fitted around the weather decks of tankers in way of cargo manifolds and cargo piping are to be treated as bulwarks. Freeing ports are to be arranged in accordance with this regulation. Closures attached to the freeing ports for use during loading and discharge operations are to be arranged in such a way that jamming cannot occur while at sea.

13.2.2 Where a ship fitted with a trunk, open rails are not fitted on the weather part of the free board deck in way of the trunk at least half their length or where continuous or substantially continuous hatchway side coamings are fitted between detached superstructures, the minimum area of the freeing port openings is to be calculated from the following table:

Breadth of hatchway or trunk in relation to the breadth of ship	Area of freeing ports in relation to the total area of the bulwarks
40% or less	20%
75% or more	10%

The area of freeing ports at intermediate breadths is to be obtained by linear interpolation.

13.2.3 The effectiveness of the freeing area in bulwarks required by paragraph 13.2.1 above depends on the free flow area across the deck of a ship. Where there is no free flow due to the presence of a continuous trunk or hatchway coaming, the freeing area in bulwarks is calculated in accordance with 13.2.2 above. The free flow area on deck is the net area of gaps between hatchways, and between hatchways and superstructures and deckhouses up to the actual height of the bulwark.

The freeing port area in bulwarks is to be assessed in relation to the net free flow area as follows:

(a) If the free flow area is not less than the freeing area calculated from 13.2.2 as if the hatchway coamings were continuous, then the minimum freeing port area calculated from 13.2.1 is to be deemed sufficient.

(b) If the free flow area is equal to, or less than the area calculated from 13.2.1, the minimum freeing area in the bulwarks is to be determined from 13.2.2.

(c) If the free flow area is smaller than calculated from 13.2.2, but greater than calculated from 13.3.1, the minimum freeing area in the bulwark is to be determined from the following formula:

$$F = F_1+F_2-F_p \quad m^2$$

where:

F_1 = The minimum freeing area calculated from 13.2.1;
F_2 = The minimum freeing area calculated from 13.2.2; and
F_p = The total net area of passages and gaps between hatch ends and superstructures or deckhouse up to the actual height of bulwark.

13.2.4 In ships having superstructures on the freeboard deck or superstructure decks, which are open at either or both ends to wells formed by bulwarks on the open decks, adequate provision for freeing the open spaces within the superstructures is to be provided. The minimum freeing port area on each side of the ship for the open superstructure (A_s) and for the open well (A_w), is to be calculated in accordance with the following procedure:

(a) Determine the total well length (l_t) equal to the sum of the length of the open deck enclosed by bulwarks (l_w) and the length of the common space within the open superstructure (l_s).

(b) To determine A_s:

(i) Calculate the freeing port area (A) required for an open well of length l_t in accordance with 13.2.1 with standard height bulwark assumed;

(ii) Multiply by a factor of 1.5 to correct for the absence of sheer, if applicable, in accordance with 13.2.1.

(iii) Multiply by the factor (b_o/l_t) to adjust the freeing port area for the breadth (b_o) of the openings in the end bulkhead of the enclosed superstructure;

(iv) To adjust the freeing port area for that part of the entire length of the well which is enclosed by the open superstructure, multiply by the factor:

$1-(l_w/l_t)^2$

where:
l_w and l_t = as defined in 13.2.4(a).

(v) To adjust the freeing port area for the distance of the well deck above the freeboard deck, for decks located more than $0.5h_s$ above the freeboard deck, multiply by the factor:

$0.5(h_s/h_w)$

where:
h_w = The distance of the well deck above the freeboard deck.
h_s = One standard superstructure height.

(c) To determine A_w:

(i) The freeing port area for the open well (A_w) is to be calculated in accordance with 13.2.4(b)(i), using l_w to calculate a nominal freeing port area (A'), and then adjusted for the actual height of the bulwark (h_b) by the application of one of the following area corrections, whichever is applicable:

for bulwarks greater than 1.2 m in height:

$A_c = l_w((h_b-1.2)/0.10)(0.004)$ m^2

for bulwarks less than 0.9 m in height:

$A_c = l_w((h_b-0.9)/0.10)(0.004)$ m^2

for bulwarks between 1.2 m and 0.9 m in height there is no correction (i.e. $A_c=0$);

(ii) The corrected freeing port area ($A_w=A'+A_c$) is to then be adjusted for absence of sheer, if applicable, and height above freeboard deck as in 13.2.4(b)(ii) and (b)(v), using h_s and h_w.

(d) The resulting freeing port areas for the open superstructure (A_s) and for open well (A_w) are to provided along each side of the open space covered by the open superstructure and each side of the open well, respectively.

(e) The above relationships are summarized by the following equations, assuming l_t, the sum of l_w and l_s is greater than 20 m:

freeing port area A_w for the open well:

$A_w = (0.07l_w+A_c)(\text{sheer correction})(0.5h_s/h_w)$;

freeing port area A_s for the open superstructure:

$A_s = (0.07l_t)(\text{sheer correction})\{b_o/l_t[1-(l_w/l_t)^2]\}(0.5h_s/h_w)$;

Where l_t is 20 m or less, the basic freeing port area is $A=0.7+0.035l_t$ in accordance with 13.2.1.

13.2.5 On ships with continuous longitudinal hatch coamings, where water may accumulate between the transverse coamings, freeing ports shall be provided at both sides, with a minimum section area in m^2:

$A_q = 0.07\, b_Q$

where:
b_Q = breadth of transverse box girder in m.

In case of a partial closed structures the area A_q may be reduced by the ratio of clear opening of the transverse hatch coaming and the total area of enclosed space.

13.2.6 The lower edges of freeing ports are to be as near the deck as practicable. Two-thirds of the freeing port area required is to be provided in the half of the well nearest the lowest point of the sheer curve. One third of the freeing port area required is to be evenly spread along the remaining length of the well. With zero or little sheer on the exposed freeboard deck or an exposed superstructure deck the freeing port area is to be evenly spread along the length of the well.

13.2.7 All freeing port openings in the bulwarks are to be protected by rails or bars spaced approximately 230 mm apart. If shutters are fitted to freeing ports, ample clearance is to be provided to prevent jamming. Hinges are to have pins or bearings of non-corrodible material. Shutters are not to be fitted with securing appliances.

13.3 Side Scuttles, Windows and Skylights

13.3.1 Side scuttles and windows, together with their glasses, deadlights and storm coves, if fitted, are to be of an approved design and substantial construction. Non-metallic frames are not acceptable.

13.3.2 Side scuttles are defined as being round or oval openings with an area not exceeding 0.16 m^2. Round or oval openings having areas exceeding 0.16 m^2 are to be treated as windows.

13.3.3 Windows are defined as being rectangular openings generally, having a radius at each corner relative to the window size and round or oval openings with an area exceeding 0.16 m^2.

13.3.4 Side scuttles to the following spaces are to be fitted with the following hinged inside deadlights which are to be capable of being closed and secured watertight if fitted below the freeboard deck and weathertight if fitted above:

(a) spaces below freeboard deck;

(b) spaces within the first tier of enclosed superstructures; and

(c) first tier deckhouses on the freeboard deck protecting openings leading below or considered buoyant in stability calculations

13.3.5 Side scuttles are not to be fitted in such a position that their sills are below a line drawn parallel to the freeboard deck at side and having its lowest point 2.5% of the breadth (B_f), or 500 mm, whichever is the greatest distance, above the Summer Load Line (or Timber Summer Load Line if assigned).

13.3.6 If the required damage stability calculations indicate that the side scuttles would become immersed at any intermediate stage of flooding or the final equilibrium waterline, they are to be of the non-opening type.

13.3.7 Windows are not to be fitted in the following locations:

(a) below the freeboard deck;

(b) in the first tier end bulkheads or sides of enclosed superstructures; or

(c) in first tier deckhouses that are considered buoyant in the stability calculations.

13.3.8 Side scuttles and windows at the side shell in the second tier are to be provided with hinged inside deadlights capable of being closed and secured weathertight if with hinged inside deadlights capable of being closed and secured weathertight if the superstructure protects direct access to an opening leading below or is considered buoyant in the stability calculations.

13.3.9 Side scuttles and windows in side bulkheads set inboard from the side shell in the second tier which protect direct access below to spaces listed in 13.3.4 are to be provided with either hinged inside deadlights or, where they are accessible, permanently attached external storm covers which are capable of being closed and secured weathertight.

13.3.10 Cabin bulkheads and doors in the second tier and above separating side scuttles and windows from a direct access leading below or the second tier considered buoyant in the stability calculations may be accepted in place of deadlights or storm covers fitted to the side scuttles and windows.

13.3.11 Deckhouses situated on a raised quarter deck or on the deck of a superstructure of less than standard height may be regarded as being in the second tier as far as the requirements for deadlights are concerned, provided that the height of the raised quarter deck or superstructure is equal to or greater than the standard quarter deck height.

13.3.12 Fixed or opening skylights are to have a glass thickness appropriate to their size and position as required for side scuttles and windows. Skylight glasses in any position are to be protected from mechanical damage and, where fitted in position 1 or 2, are to be provided with permanently attached deadlights or storm covers.

13.4 Bow Doors and Inner Doors

13.4.1 Application

(a) This section gives requirements for the arrangement, strength and securing of bow doors and inner doors leading to a complete or long forward enclosed superstructure.

(b) Two types of bow door are provided for

(i) Visor doors opened by rotating upwards and outwards about a horizontal axis through two or more hinges located near the top of the door and connected to the primary structure of the door by longitudinally arranged lifting arms.

(ii) Side-opening doors opened either by rotating outwards about a vertical axis through two or more hinges located near the outboard edges or by horizontal translation by means of linking arms arranged with pivoted attachments to the door and the ship. It is anticipated that side-opening bow doors are arranged in pairs.

Other types of bow door will be specially considered in association with the applicable requirements of the Rules.

(c) The requirements apply to all ro-ro passenger ships and ro-ro cargo ships engaged on international voyages and also to ro-ro passenger ships and ro-ro cargo ships engaged only in domestic (non-international) voyages, except where specifically indicated otherwise herein.

(d) The requirements are not applicable to high speed, light displacement craft as defined in the IMO Code of Safety for High Speed Craft.

13.4.2 Arrangement

(a) Bow doors are to be situated above the freeboard deck. A watertight recess in the freeboard deck located forward of the collision bulkhead and above the deepest waterline fitted for arrangement of ramps or other related mechanical devices may be regarded as part of the freeboard deck for the purpose of this requirement.

(b) An inner door is to be fitted. The inner door is to be part of the collision bulkhead. The inner door needs not be fitted directly above the bulkhead below, provided it is located within the limits specified for the position of the collision bulkhead, refer to 14.1.1. A vehicle ramp may be arranged for this purpose, provided its position complies with 14.1.1. If this is not possible a separate inner weathertight door is to be installed, as far as practicable within the limits specified for the position of the collision bulkhead.

(c) Bow doors are to be so fitted as to ensure tightness consistent with operational conditions and to give effective protection to inner doors. Inner doors forming part of the collision bulkhead are to be weathertight over the full height of the cargo space and arranged with fixed sealing supports on the aft side of the doors.

(d) Bow doors and inner doors are to be arranged so as to preclude the possibility of the bow door causing structural damage to the inner door or to the collision bulkhead in the case of damage to or detachment of the bow door. If this is not possible, a separate inner weathertight door is to be installed, as indicated in (b) above.

(e) The requirements for inner doors are based on the assumption that vehicles are effectively lashed and secured against movement in stowed position.

13.4.3 Definitions

(a) Securing device – a device used to keep the door closed by preventing it from rotating about its hinges.

(b) Support device – a device used to transmit external or internal loads from the door to a securing device and from the securing device to the ship's structure, or a device other than a securing device, such as a hinge, stopper or other fixed device, that transmits loads from the door to the ship's structure.

(c) Locking device – a device that locks a securing device in the closed position

13.4.4 Strength Criteria

(a) Scantlings of the primary members, securing and supporting devices of bow doors and inner doors are to be determined to withstand the design loads defined in 13.4.5 using the following permissible stresses:

shear stress: $\tau = \frac{80}{K}$ $\quad N/mm^2$

Bending stress: $\sigma = \frac{120}{K}$ $\quad N/mm^2$

Equivalent stress: $\sigma_e = \sqrt{\sigma^2 + 3\tau^2} = \frac{150}{K}$ $\quad N/mm^2$

Where K is the material factor as given in 1.5.2(a) of Part II, but is not to be taken less than 0.72 unless a direct fatigue analysis is carried out.

(b) The buckling strength of primary members is to be verified as being adequate.

(c) For steel to steel bearings in securing and supporting devices, the nominal bearing pressure calculated by dividing the design force by the projected bearing area is not to exceed $0.8\sigma_F$, where σ_F is the yield stress of the bearing material. For other bearing materials, the permissible bearing pressure is to be determined according to the manufacturer's specification.

(d) The arrangement of securing and supporting devices is to be such that threaded bolts do not carry support forces. The maximum tension in way of threads of bolts not carrying support forces is not to exceed:

$\frac{125}{K}$ $\quad N/mm^2$

13.4.5 Design loads

(a) Bow doors

(i) The design external pressure to be considered for the scantlings of primary members, securing and supporting devices of bow doors is not to be less than the pressure as follows:

$$P_e = 2.75\lambda C_H(0.22 + 0.15\tan\alpha)\cdot\left(0.4V\sin\beta + 0.6\sqrt{L}\right)^2 \qquad kN/m^2$$

where:

V	=	Contractual ship's speed, in knots,
L	=	Ship's length, in m, but need not be taken greater than 200 m.
λ	=	Coefficient depending on the area where the ship is intended to be operated;
	=	1 for seagoing ships,
	=	0.8 for ships operated in coastal waters,
	=	0.5 for ships operated in sheltered waters.
C_H	=	0.0125L for L < 80 m,
	=	1 for L ≥ 80 m.
α	=	Flare angle at the point to be considered, defined as the angle between a vertical line and the tangent to the side shell plating, measured in a vertical plane normal to the horizontal tangent to the shell plating.
β	=	Entry angle at the point to be considered, defined as the angle between a longitudinal line parallel to the centerline and the tangent to the shell plating in a horizontal plane.

(ii) The design external forces considered for the scantlings of securing and supporting devices of bow doors are not to be less than:

$F_x = P_e A_x$ kN
$F_y = P_e A_y$ kN
$F_z = P_e A_z$ kN

where:

A_x	=	Area, in m², of the transverse vertical projection of the door between the levels of the bottom of the door and the upper deck or between the bottom of the door and the top of the door, whichever is the lesser. Where the flare angle of the bulwark is at least 15 degrees less than the flare angle of the adjacent shell plating, the height from the bottom of the door may be measured to the upper deck or to the top of the door, whichever is lesser. In determining the height from the bottom of the door to the upper deck or to the top of the door, the bulwark is to be excluded.
A_y	=	Area, in m², of the longitudinal vertical projection of the door between the levels of the bottom of the door and the upper dick of between the bottom of the door and the top of the door, whichever is the lesser. Where the flare angle of the bulwark is at least 15 degrees less than the flare angle of the adjacent shell plating, the height from the bottom of the door may be measured to the upper deck or to the top of the door, whichever is lesser. In determining the height from the bottom of the door to the upper deck or to the top of the door, the bulwark is to be excluded.
A_z	=	Area, in m², of the horizontal projection of the door between the levels of the bottom of the door and the upper deck or between the bottom of the door and the top of the door, whichever is the lesser. Where the flare angle of the bulwark is at least 15 degrees less than the flare angle of the adjacent shell plating, the height from the bottom of the door may be measured to the upper deck or to the top of the door, whichever is lesser. In determining the height from the bottom of the door to the upper deck or to the top of the door, the bulwark is to be excluded.
h	=	Height, in m, of the door between the levels of the bottom of the door and the upper deck or between the bottom of the door and the top of the door, whichever is the lesser.
l	=	Length, in m, of the door at a height h/2 above the bottom of the door.
w	=	Breadth, in m, of the door at a height h/2 above the bottom of the door.
P_e	=	External pressure, in kN/m², as given in 13.4.5(a)(i) with angles α and β.
α	=	Flare angle measured at the point on the bow door, *l*/2 aft of the stem line on the plane h/2 above the bottom of the door, as shown in Fig. II 13-1 of this Chapter.
β	=	Entry angle measured at the same point as α.

For bow doors including bulwark, of unusual form or proportions, e.g. ships with a rounded nose and large stem angles, the areas and angles used for determination of the design values of external forces may require to be specially considered.

(iii) For visor doors the closing moment M_y under external load is to be taken as:

$$M_y = F_x a + 10Wc - F_z b \qquad \text{kN-m}$$

where:

W	=	Mass of the visor door, in t.
a	=	Vertical distance, in m, from visor pivot to the centroid of the transverse vertical projected area of the visor door, as shown in Fig. II 13-2.
b	=	Horizontal distance, in m, from visor pivot to the centroid of the horizontal projected area of the visor door, as shown in Fig II 13-2.
c	=	Horizontal distance, in m, from visor pivot to the center of gravity of visor mass, as shown in Fig II 13-2.

(iv) Moreover, the lifting arms of a visor door and its supports are to be dimensioned for the static and dynamic forces applied during the lifting and lowering operations, and a minimum wind pressure of 1.5 kN/m^2 is to be taken into account.

(b) Inner doors

(i) The design external pressure considered for the scantlings of primary members, securing and supporting devices and surrounding structure of inner doors is to be taken as the greater of the following:

(1) $P_e = 0.45L$ kN/m^2

(2) $P_h = 10h$,

where:

P_h	=	Hydrostatic pressure.
h	=	The distance, in m, from the load point to the top of the cargo space.
L	=	The ship's length, as defined in 13.4.5(a)(i).

(ii) The design internal pressure P_b considered for the scantlings of securing devices of inner doors is not to be less than:

$$P_b = 25 \qquad \text{kN/m}^2$$

13.4.6 Scantlings of bow doors

(a) The strength of bow doors is to be commensurate with that of the surrounding structure.

(b) Bow doors are to be adequately stiffened and means are to be provided to prevent lateral or vertical movement of the door when closed. For visor doors adequate strength for the opening and closing operations is to be provided in the connections of the lifting arms to the door structure and to the ship structure.

(c) Plating and secondary stiffeners

(i) The thickness of the bow door plating is not to be less than that required for the side shell plating, using bow door stiffener spacing, but in no case less than the minimum required thickness of fore end shell plating.

(ii) The section modulus of horizontal or vertical stiffeners is not to be less than that required for end framing. Consideration is to be given, where necessary, to differences in fixity between ship's frames and bow doors stiffeners.

(iii) The stiffener webs are to have a net sectional area not less than.

$$A = \frac{QK}{10} \qquad \text{cm}^2$$

where:

Q = Shear force, in kN, in the stiffener calculated by using uniformly distributed external pressure P_e as given in 13.4.5(a)(i).

K = Material factor as given in 1.5.2 (a).

(d) Primary structure

(i) The bow door secondary stiffeners are to be supported by primary members constituting the main stiffening of the door.

(ii) The primary members of the bow door and the hull structure in way are to have sufficient stiffness to ensure integrity of the boundary support of the door.

(iii) Scantlings of the primary members are generally to be supported by direct calculations in association with the external pressure given in 13.4.5(a)(i) and permissible stresses given in 13.4.4(a). Normally, formulae for simple beam theory may be applied.

13.4.7 Scantlings of inner doors

(a) Scantlings of the primary members are generally to be supported by direct calculations in association with the external pressure given in 13.4.5(b)(i) and permissible stresses given in 13.4.4(a). Normally, formulae for simple beam theory may be applied.

(b) Where inner door also serve as a vehicle ramps, the scantlings are not to be less than those required for vehicle decks.

(c) The distribution of the forces acting on the securing and supporting devices is generally to be supported by direct calculations taking into account the flexibility of the structure and the actual position and stiffness of the supports.

13.4.8 Securing and supporting of bow doors

(a) Bow doors are to be fitted with adequate means of securing and supporting so as to be commensurate with the strength and stiffness of the surrounding structure. The hull supporting structure in way of the bow door is to be suitable for the same design loads and design stresses as the securing and supporting devices. Where packing is required, the packing material is to be of a comparatively soft type, and the supporting forces are to be carried by the steel structure only. Other types of packing may be considered. Maximum design clearance between securing and supporting devices is not generally to exceed 3 mm. A means is to be provided for mechanically fixing the door in the open position.

(b) Only the active supporting and securing devices having an effective stiffness in the relevant direction are to be included and considered to calculate the reaction forces acting on the devices. Small and/or flexible devices such as cleats intended to provide local compression of the packing material are not generally to be included in the calculations called for in 13.4.8(d)(v). The number of securing and supporting devices are generally to be the minimum practical whilst taking into account the requirements for redundant provision given in 13.4.8(d)(vi) and 13.4.8(d)(vii) and the available space for adequate support in the hull structure.

(c) For opening outwards visor doors, the pivot arrangements is generally to be such that the visor is self closing under external loads, that is $M_y > 0$. Moreover, the closing moment M_y as given in 13.4.5(a)(iii) is to be not less than:

$$M_{yo} = 10Wc + 0.1(a^2 + b^2)^{0.5}(F_x^2 + F_z^2)^{0.5} \quad \text{kN-m}$$

(d) Scantlings

(i) Securing and supporting devices are to be adequately designed so that they can withstand the reaction forces within the permissible stresses given in 13.4.4(a).

(ii) For visor doors the reaction forces applied on the effective securing and supporting devices assuming the door as a rigid body are determined for the following combination of external loads acting simultaneously together with the self weight of the door.

Case 1 F_x and F_z.
Case 2 0.7 F_y acting on each side separately together with 0.7 F_x and 0.7 F_z.

where F_x, F_y and F_z are determined as indicated in 13.4.5(a)(ii) and applied at the centroid of projected areas.

(iii) For side-opening doors the reaction forces applied on the effective securing and supporting devices assuming the door as a rigid body are determined for the following combination of external loads acting simultaneously together with the self weight of the door.

Case 1 F_x, F_y and F_z acting on both doors.
Case 2 0.7 F_x and 0.7 F_z acting on both doors and 0.7 F_y acting on each door separately.

where F_x, F_y and F_z are determined as indicated in 13.4.5(a)(ii) and applied at the centroid of project areas.

(iv) The support forces as determined according to 13.4.8(d)(ii) case 1 and 13.4.8(d)(iii) case1 are to generally give rise to a zero moment about the transverse axis through the centroid of the area A_x. For visor doors, longitudinal reaction forces of pin and/or wedge supports at the door base contributing to this moment are not to be of the forward direction.

(v) The distribution of the reaction forces acting on the securing and supporting devices may require to be supported by direct calculations taking into account the flexibility of the hull structure and the actual position and stiffness of the supports.

(vi) The arrangement of securing and supporting devices in way of these securing devices is to be designed with redundancy so that in the event of failure of any single securing or supporting device the remaining devices are capable to withstand the reaction forces without exceeding by more than 20 per cent the permissible stresses as given in 13.4.4.

(vii) For visor doors, two securing devices are to be provided at the lower part of the door, each capable of providing the full reactions force required to prevent opening of the door within the permissible stresses given in 13.4.4(a). The opening moment M_o to be balanced by this reaction force, is not to be taken less than:

$M_o = 10Wd + 5A_xa$ kN-m

where:
d = Vertical distance, in m, from the hinge axis to the center of gravity of the door.
A_x, W, a = As defined in 13.4.5(a)(iii).

(viii) For visor doors, the securing and supporting devices excluding the hinges are to be capable of resisting the vertical design force ($F_z - 10W$), in kN, within the permissible stresses given in 13.4.4(a).

(ix) All load transmitting elements in the design load path, from door through securing and supporting devices into the ship structure, including welded connections, are to be to the same strength standard as required for the securing and supporting devices.

(x) For side-opening doors, thrust bearing has to be provided in way of girder ends at the closing of the two leaves to prevent one leaf to shift towards the other one under effect of unsymmetrical pressure (see example of Fig. II 13-3). Each part of the thrust bearing has to be kept secured on the other part by means of securing devices. Any other arrangement serving the same purpose may be proposed.

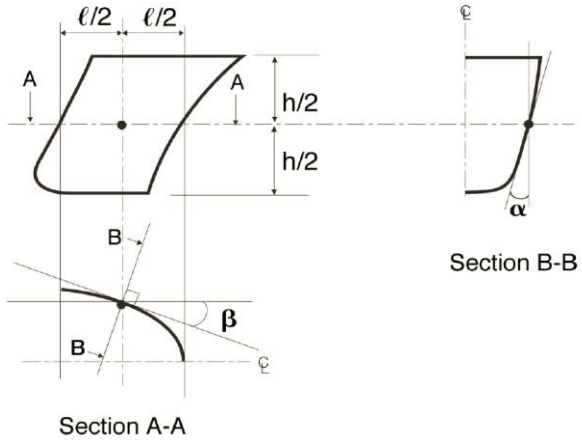

Fig. II 13-1
Definition of α and β

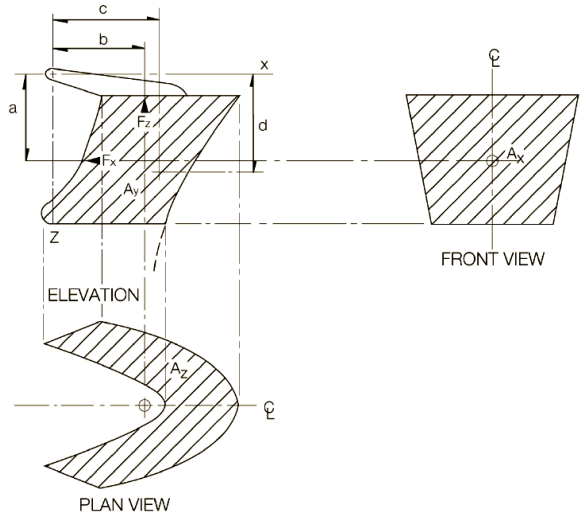

Fig. II 13-2
Bow Door of Visor Type

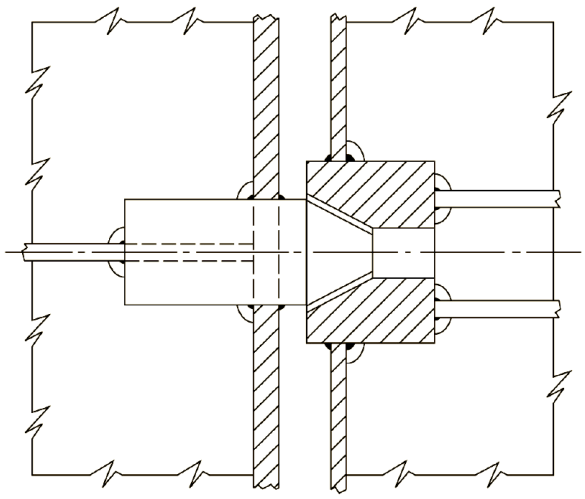

Fig. II 13-3
Thrust Bearing

13.4.9 Securing and locking arrangement

(a) Systems for operation

(i) Securing devices are to be simple to operate and easily accessible. Securing devices are to be equipped with mechanical locking arrangement (self locking or separate arrangement), or to be of the gravity type. The opening and closing systems as well as securing and locking devices are to be interlocked in such a way that they can only operate in the proper sequence.

(ii) Bow doors and inner doors giving access to vehicle decks are to be provided with an arrangement for remote control, from a position above the freeboard deck, of:

(1) the closing and opening of the doors, and

(2) associated securing and locking devices for every door
Indication of the open/closed position of every door and every securing and locking device is to be provided at the remote control stations. The operating panels for operation of doors are to be inaccessible to unauthorized persons. A notice plate, giving instructions to the effect that all securing devices are closed and locked before leaving harbor, is to be placed at each operating panel and is to be supplemented by warning indicator lights.

(iii) Where hydraulic securing devices are applied, the system is to be mechanically lockable in closed position. This means that, in the event of loss of the hydraulic fluid, the securing devices remain locked. The hydraulic system for securing and locking devices is to be isolated from other hydraulic circuits, when in closed position.

(b) Systems for indication/monitoring

(i) Separate indicator lights and audible alarms are to be provided on the navigation bridge and on the operating panel to show that the bow door and inner door are closed and that their securing and locking devices are properly positioned. The indication panel is to be provided with a lamp test function. It is to not be possible to turn off the indicator eight.

(ii) The indicator system is to be designed on the fail-safe principle and is to show by visual alarms if the door is not fully closed and not fully locked and by audible alarms if securing devices become open or locking devices become unsecured. The power supply for the indicator system is to be independent of the power supply for operating and closing the doors. The sensors of the indicator system are to be protected from water, ice formation and mechanical damages.

(iii) The indication panel on the navigation bridge is to be equipped with a mode selection function "harbor/sea voyage", so arranged that audible alarm is given if vessel leaves harbor with the bow door or inner door not closed and with any of the securing devices not in the correct position.

(iv) A water leakage detection system with audible alarm and television surveillance is to be arranged to provide an indication to the navigation bridge and to the engine control room of leakage through the inner door.

(v) Between the bow door and the inner door a television surveillance system is to be fitted with a monitor on the navigation bridge and in the engine control room. The system must monitor the position of doors and a sufficient number of their securing devices. Special consideration is to be given for lighting and contrasting color of objects under surveillance.

(vi) A drainage system is to be arranged in the area between bow door and ramp, as well as in the area between the ramp and inner door where fitted. The system is to be equipped with an audible alarm function to the navigation bridge for water level in these areas exceeding 0.5 m above the car deck level.

13.4.10 Operating and Maintenance manual

(a) An Operating and Maintenance Manual for the bow door and inner door is to be provided on board and contain necessary information on:

(i) Main particulars and design drawings, including:

(1) special safety precautions,

(2) details of vessel,

(3) equipment and design loading (for ramps),

(4) key plan of equipment (doors and ramps),

(5) manufacturer's recommended testing for equipment,

(6) description of equipment for bow doors, inner bow doors, bow ramp/doors, side doors, stern doors, central power pack, bridge panel, engine control room panel.

(ii) Service conditions, including:

(1) limiting heel and trim of ship for loading/unloading,

(2) limiting heel and trim for door operations,

(3) doors/ramps operating instructions,

(4) doors/ramps emergency operating instructions.

(iii) Maintenance, including:

(1) schedule and extent of maintenance,

(2) trouble shooting and acceptable clearances,

(3) manufacturer's maintenance procedures.

(iv) Register of inspections, including inspection of locking, securing and supporting devices, repairs and renewals.

(b) This Manual is to be submitted for approval that the above mentioned items are contained in the Operating and Maintenance Manual and that the maintenance part includes the necessary information with regard to inspections, troubleshooting and acceptance/rejection criteria. It is recommended that recorded inspections of the door supporting and securing devices be carried out by the ship's staff at monthly intervals or following incidents that could result in damage, including heavy weather or contact in the region of the shell doors. Any damages recorded during such inspections are to be reported to the Society.

(c) Documented operating procedures for closing and securing the bow door and inner door are to be kept on board and posted at appropriate place.

13.5 Side Shell Doors and Stern Doors

13.5.1 Application

(a) This section gives requirements for the arrangement, strength and securing of side shell doors abaft the collision bulkhead, and stern doors leading into enclosed spaces.

(b) The requirements apply to all ro-ro passenger ships and ro-ro cargo ships engaged on international voyages and also to ro-ro passenger ships and ro-ro cargo ships engaged only in domestic (non international) voyages, except where specifically indicated otherwise herein. The requirements are not applicable to high speed, light displacement craft as defined in the IMO Code of Safety for High Speed Craft.

13.5.2 Arrangement

(a) Stern doors for passenger vessels are to be situated above the freeboard deck. Stern doors for Ro-Ro cargo ships and side shell doors may be either below or above the freeboard deck.

(b) Side shell doors and stern doors are to be so fitted as to ensure tightness and structural integrity commensurate with their location and the surrounding structure.

(c) Where the sill of any side shell door is below the uppermost load line, the arrangement is to be specially considered.

(d) Doors are to preferably open outward.

(e) The number of door openings is to be kept to the minimum compatible with design and proper operation of the ship.

(f) The strength criteria is to refer that specified in 13.4.4 of this Chapter.

13.5.3 Definitions

(a) Securing device – Same as 13.4.3(a).

(b) supporting device – Same as 13.4.3(b).

(c) Locking device – Same as 13.4.3(c).

(d) Ro-ro passenger ship – a passenger ship with ro-ro spaces or special category spaces.

(e) Ro-ro spaces – are spaces not normally sub-divided in any way and extending to either a substantial length or the entire length of the ship, in which motor vehicles with fuel in their tanks for their own propulsion and/or goods (packaged or in bulk, in or on rail or road cars, vehicles (including road or rail tankers), trailers, containers, pallets, demountable tanks or in or on similar stowage units or, other receptacles) can be loaded and unloaded normally in a horizontal direction.

(f) Special category spaces – are those enclosed vehicle spaces above or below the bulkhead deck, into and from which vehicles can be driven and to which passengers have access. Special category spaces may be accommodated on more than one deck provided that the total overall clear height for vehicles does not exceed 10 m.

13.5.4 Design loads

(a) The design forces considered for the scantlings of primary members, securing and supporting devices of side shell doors and stern doors are to be not less than:

(i) Design forces for securing or supporting devices of doors opening inwards:

(1) External force : $F_e = AP_e + F_p$ kN

(2) Internal force : $F_i = F_o + 10W$ kN

(ii) Design forces for securing or supporting devices of doors opening outwards:

(1) External force : $F_e = AP_e$ kN

(2) Internal force : $F_i = F_o + 10W + F_p$ kN

(iii) Design forces for primary members:

(1) External force : $F_e = AP_e$ kN

(2) Internal force: $F_i = F_o + 10W$ kN

whichever is the greater.

where:

A	=	Area, in m^2, of the door bears the actual load in the loading direction.
W	=	Mass of door, in t.
F_p	=	Total packing force in kN. Packing line pressure is normally not to be taken less than 5N/mm.
F_o	=	The greater of. F_c and 5A (kN).
F_c	=	Accidental force, in kN, due to lose of cargo etc., to be uniformly distributed over the area A and not to be taken less than 300 kN. Where the area of doors is less than 30 m^2, the value of F_c may be appropriately reduced to 10A (kN). However, the value of F_c may be taken as zero, provided an additional structure such as an inner ramp is fitted, which is capable of protecting the door from accidental forces to loose cargoes.
P_e	=	External design pressure determined at the center of gravity of the door opening and not taken less than:
	=	$10 (T - Z_G) + 25$ kN/m^2 for $Z_G < T$
	=	25 kN/m^2 for $Z_G \geq T$
	=	Moreover, for stern doors of ships fitted with bow doors, P_e is not to be taken less than:
	=	$0.6\lambda C_H\left(0.8 + 0.6\sqrt{L}\right)^2$ kN/m^2

L, λ and C_H	=	As specified in 13.4.5(a)(i) of this Chapter.
T	=	Draught, in m, at the highest subdivision load line.
Z_G	=	Height of the center of area of the door, in m. above the baseline.

13.5.5 Scantlings of side shell doors and stern doors

(a) The strength of side shell doors and stern doors is to be commensurate with that of the surrounding structure.

(b) Side shell doors and stern doors are to be adequately stiffened and means are to be provided to prevent any lateral or vertical movement of the doors when closed. Adequate strength is to be provided in the connections of the lifting/maneuvering arms and hinges to the door structure and to the ship's structure.

(c) Where doors also serve as vehicle ramps, the design of the hinges is to take into account the ship angle of trim and heel which may result in uneven loading on the hinges.

(d) Shell door openings are to have well-rounded corners and adequate compensation is to be arranged with web frames at sides and stringers or equivalent above and below.

(e) Plating and secondary stiffeners

(i) The thickness of the door plating is not to be less than the required thickness for the side shell plating or the superstructure side shell plating, using the door stiffener spacing, but the thickness of the stern door which is not exposed to direct wave impact by a permanent ramp way provided outside the stern door may be reduced by 20% from the required thickness prescribed above.

(ii) Notwithstanding the provision in (i) above, the thickness of the door plating is not to be less than the minimum required thickness of shell plating.

(iii) Where doors serve as vehicle ramps, the plating thickness is to be not less than required for vehicle deck.

(iv) The section modulus of horizontal or vertical stiffeners is not to be less than that required for side framing. Consideration is to be given, where necessary, to differences in fixity between ship's frames and door stiffeners. Where doors serve as vehicle ramps, the stiffener scantlings are not to be less than required for vehicle decks.

(f) Primary Structure

(i) The secondary stiffeners are to be supported by primary members constituting the main stiffening of the door.

(ii) The primary members and the hull structure in way are to have sufficient stiffness to ensure structural integrity of the boundary of the door.

(iii) Scantlings of the primary members are generally to be supported by direct calculations in association with the design forces given in 13.5.4 above and permissible stresses given in 13.4.4 of this Chapter. Normally, formulae for simple beam theory may be applied to determine the bending stresses. Members are to be considered to have simply supported end connections.

(iv) Webs of primary members are to be properly stiffened in the vertical direction to shell plating.

(v) Ends of stiffeners and primary members of the doors are to have sufficient rigidity against rotation and the moment of inertia is not to be less than that obtained from the following formula:

$8d^4F_p$ cm^4

where:

d	=	Distance (m) between securing devices
F_p	=	See 13.5.4 of this Chapter

13.5.6 Securing and Supporting of Doors

(a) Side shell doors and stern doors are to be fitted with adequate means of securing and supporting so as to be commensurate with the strength and stiffness of the surrounding structure. The hull supporting structure in way of the doors is to be suitable for the same design loads and design stresses as the securing and supporting devices. Where packing is required, the packing material is to be of a comparatively soft type, and the supporting forces are to be carried by the steel structure only. Other types of packing may be considered. Maximum design clearance between securing and supporting devices is not generally to exceed 3 mm. A means is to be provided for mechanically fixing the door in the open position.

(b) Only the active supporting and securing devices having an effective stiffness in the relevant direction are to be included and considered to calculate the reaction forces acting on the devices. Small and/or flexible devices such as cleats intended to provide local compression of the packing material are not generally to be included in the calculations called for in 13.5.6(c)(ii). The number of securing and supporting devices are generally to be the minimum practical whilst taking into account the requirement for redundant provision given in 13.5.6(c)(iii) and the available space for adequate support in the hull structure.

(c) Scantlings

(i) Securing and supporting devices are to be adequately designed so that they can withstand the reaction forces within the permissible stresses given in 13.4.4.

(ii) The distribution of the reaction forces acting on the securing devices and supporting devices may require to be supported by direct calculations taking into account the flexibility of the hull structure and the actual position of the supports.

(iii) The arrangement of securing devices and supporting devices in way of these securing devices is to be designed with redundancy so that in the event of failure of any single securing or supporting device the remaining devices are capable to withstand the reaction forces without exceeding by more than 20 per cent the permissible stresses as given in 13.4.4.

(iv) All load transmitting elements in the design load path, from the door through securing and supporting devices into the ship's structure, including welded connections, are to be to the same strength standard as required for the securing and supporting devices.

13.5.7 Securing and Locking Arrangement

(a) Systems for operation

(i) Securing devices are to be simple to operate and easily accessible. Securing devices are to be equipped with mechanical locking arrangement (self locking or separate arrangement) or are to be of the gravity type. The opening and closing systems as well as securing and locking devices are to be interlocked in such a way that they can only operate in the proper sequence.

(ii) Doors which are located partly or totally below the freeboard deck with a clear opening area greater than 6 m^2 are to be provided with an arrangement for remote control, from a position above the freeboard deck, of :

(1) The closing and opening of the doors,

(2) Associated securing and locking devices.
For doors which are required to be equipped with a remote control arrangement, indication of the open/closed position of the door and the securing and locking device is to be provided at the remote control stations. The operating panels for operation of doors are to be inaccessible to unauthorized persons. A notice plate, giving instructions to the effect that all securing devices is to be closed and locked before leaving harbor, is to be placed at each operating panel and is to be supplemented by warning indicator lights.

(iii) Where hydraulic securing devices are applied, the system is to be mechanically lockable in closed position. This means that, in the event of loss of the hydraulic fluid, the securing devices remain locked. The hydraulic system for securing and locking devices is to be isolated from other hydraulic circuits, when closed position.

(b) Systems for indication/monitoring

(i) The following requirements apply to doors in the boundary of special category spaces or ro-ro spaces, through which such spaces may be flooded. For cargo ships, where no part of the door is below the uppermost waterline and the area of the door opening is not greater than 6 m^2 ,then the requirement of this section need not be applied.

(ii) Separate indicator lights and audible alarms are to be provided on the navigation bridge and on each operating panel to indicate that the doors are closed and that their securing and locking devices are properly positioned. The indication panel is to be provided with a lamp test function. It is to not be possible to turn off the indicator light.

(iii) The indicator system is to be designed on the fail-safe principle and is to indicate by visual alarms if the door is not fully closed and not fully locked and by audible alarms if securing devices become open or locking devices become unsecured. The power supply for the indicator system is to be independent of the power supply for operating and closing the doors and is to be provided with a backup power supply. The sensors of the indicator system are to be protected from water, ice formation and mechanical damages.

(iv) The indication panel on the navigation bridge is to be equipped with a mode selection function "harbor/sea voyage", so arranged that audible alarm is given if the vessel leaves harbor with side shell or stern doors not closed or with any of the securing devices not in the correct position.

(v) For passenger ships, a water leakage detection system with audible alarm and television surveillance is to be arranged to provided an indication to the navigation bridge and to the engine control room of any leakage through the doors. For cargo ships, a water leakage detection system with audible alarm is to be arranged to provide an indication to the navigation bridge.

(vi) For ro-ro passenger ships, on international voyages, the special category spaces and ro-ro spaces are to be continuously patrolled or monitored by effective means, such as television surveillance, so that any movement of vehicles in adverse weather conditions and unauthorized access by passengers thereto, can be detected whilst the ship is underway.

13.5.8 Operating and Maintenance Manual

(a) An operating and Maintenance Manual for the side shell and stern doors is to be provided on board and contain necessary information on:

(i) Main particulars and design drawings, including:

(1) Special safety precautions,

(2) Details of vessel,

(3) Equipment and design loading (for ramps),

(4) Key plan of equipment (doors and ramps),

(5) Manufacturer's recommended testing for equipment,

(6) Description of equipment for bow doors, inner bow doors, bow ramp/doors, side doors, stern doors, central power pack, bridge panel, engine control room panel.

(ii) Service conditions, including:

(1) Limiting heel and trim of ship for loading/unloading,

(2) Limiting heel and trim for door operations,

(3) Doors/ramps operating instructions,

(4) Doors/ramps emergency operating instructions.

(iii) Maintenance, including:

(1) Schedule and extent of maintenance,

(2) Trouble shooting and acceptable clearances,

(3) Manufacturer's maintenance procedures.

(iv) Register of inspections, including inspection of locking, securing and supporting devices, repairs and renewals.

(b) This Manual is to be submitted for approval that the above mentioned items are contained in the Operating and Maintenance Manual and that the maintenance part includes the necessary information with regard to inspections, troubleshooting and acceptance/rejection criteria. It is recommended that recorded inspections of the door supporting and securing devices be carried out by the ship's staff at monthly intervals or following incidents that could result in damage, including heavy weather or contact in the region of the shell doors. Any damages recorded during such inspections are to be reported to the Society.

(c) Documented operating procedures for closing and securing side shell and stern doors are to be kept on board and posted at the appropriate places.

13.6 Means of Embarkation and Disembarkation

13.6.1 Ships are to be provided with appropriate means of embarkation on and disembarkation from ships for use in port and in port related operations, such as gangways and accommodation ladders.

13.6.2 Where a ship is engaged in voyages between designated ports where appropriate shore accommodation /embarkation ladders (platforms) are provided, special approval may be made by the Society.

13.6.3 the means of embarkation and disembarkation are to be in accordance with the following.

(a) Accommodation ladders and gangways are to be constructed based on ISO 5488:1979 "Shipbuilding - accommodation ladders", ISO 7061:1993 "Shipbuilding - aluminium shore gangways for seagoing vessels" or standards where deemed appropriate by the Society. Accommodation ladder winches are to be constructed based on ISO 7364:1983 "Shipbuilding and marine structures – deck machinery – accommodation ladder winches" or standards where deemed appropriate by the Society or are to be the one pursuant to aforementioned standards.

(b) The structure of the accommodation ladders and gangways and their fittings and attachments are to be such as to allow regular inspection, maintenance of all parts and, if necessary, lubrication of their pivot pin. Special care is to be paid to welding connection.

(c) As far as practicable, the means of embarkation and disembarkation are to be sited clear of the working area and are not to be placed where cargo or other suspended loads may pass overhead. However, in cases where the Society recognizes unavoidable circumstances, the means of embarkation and disembarkation may be installed within the above mentioned areas or places, provided that safe passage is ensured through description in operation manuals, the installation of warning plates, and so on.

(d) Each accommodation ladder is to be of such a length to ensure that, at a maximum design operating angle of inclination, the lowest platform will be not more than 600 mm above the waterline in the lightest seagoing condition (in this regard, trim is to be the condition resulting from the loading condition of the lightest seagoing condition), as defined in SOLAS Regulation III/3.13. However, in cases where the height of the embarkation / disembarkation deck exceeds 20 m above the waterline or is deemed appropriate by the Society, an alternative means of providing safe access to the ship or supplementary means of access to the bottom platform of the accommodation ladder may be accepted.

(e) The arrangement at the head of the accommodation ladder is to provide direct access between the ladder and the ship's deck by a platform securely guarded by handrails and handholds. The ladder is to be securely attached to the ship to prevent overturning.

(f) Each accommodation ladder or gangway is to be clearly marked at each end with a plate showing the restrictions on the safe operation and loading, including the maximum and minimum permitted design angles of inclination, design load, maximum load on bottom end plate, etc. Where the maximum operational load is less than the design load, it is also to be shown on the marking plate.

(g) Gangways are not to be used at an angle of inclination greater than 30 degrees from the horizontal and accommodation ladders are not to be used at an angle greater than 55 degrees from the horizontal, unless designed and constructed for use at angles greater than these and marked as such.

(h) Gangways are not to be secured to a ship's guardrails unless they have been designed for that purpose. If positioned through an open section of bulwark or railings, any remaining gaps are to be adequately fenced.

(i) Adequate lighting is to be provided to illuminate the means of embarkation and disembarkation, the position on deck where persons embark or disembark and the controls of the arrangement.

(j) A lifebuoy equipped with a self-igniting light and a buoyant lifeline is to be available for immediate use in the vicinity of the embarkation and disembarkation arrangement when in use.

(k) A safety net is to be mounted and arrangements that enable the installation of such net are to be provided to prevent falling accident in cases where it is possible that a person may fall from the means of embarkation and disembarkation or between the ship and quayside.

13.6.4 Ships that have small freeboards and are provided with boarding ramps needs not to be in accordance with the requirements of 13.6.3.

Chapter 14
Watertight Bulkheads

14.1 General

14.1.1 Collision Bulkhead

(a) A collision bulkhead is to be fitted which is to be watertight up to the bulkhead deck. This bulkhead is to be located at a distance from the forward perpendicular of not less than $0.05L_f$ (L_f is defined in 1.2.10 of Part II) or 10 m, whichever is the less, and, except as may be permitted by the Society, not more than $0.08L_f$ or $0.05L_f$ + 3 m, whichever is the greater. Where any part of the ship below the waterline at 85% of the least moulded depth extends forward of the forward perpendicular of the length for freeboard, e.g., a bulbous bow, the above-mentioned distance is to be measured from the point either:

(i) at the mid-length of such extension;

(ii) at a distance $0.015L_f$ forward of the forward perpendicular; or

(iii) at a distance 3.0 m forward of the forward perpendicular,

whichever gives the smallest measurement.

(b) The bulkhead may have steps or recesses provided they are within the limits prescribed in (a).

(c) No doors, manholes, access openings, ventilation ducts or any other openings are to be fitted in the collision bulkhead below the bulkhead deck. Where a collision bulkhead extends up to a deck above the freeboard deck in accordance with the requirements of 14.1.5(b), the number of openings in the extension of the collision bulkhead is to be kept to a necessary minimum and all such openings are to be provided with weathertight means of closing.

(d) The collision bulkhead arrangement in a ship provided with bow doors is to be at the discretion of the Society. Where a sloping ramp forms a part of the collision bulkhead above the bulkhead, the part of the ramp which is more than 2.3 m above the bulkhead deck may extend forward of the limit specified in (a) above. In this case, the ramp is to be weathertight over its complete length. However, ramps not meet the above requirement are to be disregarded as an extension of the collision bulkhead.

(e) Notwithstanding the requirements in (c), the collision bulkhead may be pierced below the bulkhead deck by not more than one pipe for dealing with fluid in the forepeak tank, provided that the pipe is fitted with a screw-down valve capable of being operated from above the bulkhead deck, the valve chest being secured inside the forepeak to the collision bulkhead. The Society may, however, agree the fitting of this valve on the after side of the collision bulkhead provided that the valve is readily accessible under all service conditions and the space in which it is located is not a cargo space. All valves shall be of steel, bronze or other approved ductile material. Valves of ordinary cast iron or similar material are not acceptable.

14.1.2 After Peak Bulkhead

(a) Ships are to have an after peak bulkhead.

(b) The stern tube is to be enclosed in a watertight compartment by the after peak bulkhead or other arrangements.

14.1.3 At each end of the machinery space, a watertight bulkhead is to be provided.

14.1.4 Hold Bulkheads

(a) Cargo ships of an ordinary type are to have hold bulkheads in addition to the bulkheads specified in 14.1.1 to 14.1.3 at reasonable intervals. The total number of watertight bulkheads may not be less than that given by Table II 14-1.

Table II 14-1
Total Number of Watertight Bulkheads

Length of ship, L, in m	Total number of bulkheads
67 ≤ L < 87	4
87 ≤ L < 102	5
102 ≤ L < 123	6
123 ≤ L < 143	7
143 ≤ L < 165	8
165 ≤ L < 186	9
186 ≤ L	Approved by the Society

(b) Where it is impracticable to adhere to the number of hold bulkheads required above, an alternative arrangement may be accepted subject to the approval by the Society.

14.1.5 Height of Watertight Bulkheads

The watertight bulkheads required in 14.1.1 to 14.1.4 are to extend to the freeboard deck with the following exceptions.

(a) A watertight bulkhead in way of the raised quarter or the sunken forecastle deck is to extend up to the captioned deck.

(b) Where a forward superstructure having openings without closing appliances leads to a space below the freeboard deck, or a long forward superstructure is provided, the collision bulkhead is to extend up to the superstructure deck and to be weathertight. However, where the extension is located within the limits specified in 14.1.1 and the part of the deck which forms the step is made effectively weathertight, it need not be fitted directly above the collision bulkhead.

(c) The aft peak bulkhead may terminate at a deck above the designed maximum load line provided that this deck is watertight to the stern of the ship.

14.1.6 Transverse Strength of Hull

(a) Where the watertight bulkheads required in 14.1.1 to 14.1.5 are not extended up to the strength deck, deep webs or partial bulkheads situated immediately or nearly above the main watertight bulkheads are to be provided so as to maintain the transverse strength and stiffness of the hull.

(b) Where the length of a hold exceeds 30 meters, suitable means are to be provided so as to maintain the transverse strength and stiffness of the hull.

14.2 Construction of Watertight Bulkheads

14.2.1 The thickness of bulkhead plating is not to be less than that obtained from the following formula:

$$3.2S\sqrt{Kh} + 2.5 \quad \text{mm}$$

where:

K	=	Material factor as specified in 1.5.2(a) of this Part.
S	=	Spacing of stiffeners, in m.
h	=	Vertical distance, in m, measured from the lower edge of the bulkhead plate to the bulkhead deck at the centre line of ship. It is not to be less than 3.4 meters.

14.2.2 Increase in Thickness of Plates of Special Parts

(a) The thickness of the lowest strake of bulkhead plating is to be at least 1.0 mm thicker than that obtained from the formula in 14.2.1.

(b) The lowest strake of bulkhead plating is to extend at least 610 mm above the top of the inner bottom plating in way of double bottom or 915 mm above the top of keel in way of single bottom. Where the double bottom is provided only on one side of the bulkhead, the extension of the lowest strake is to be up to the higher of the two heights given in the preceding sentence.

(c) The bulkhead plating in the limber is to be at least 2.5 mm thicker than that given in 14.2.1.

(d) The bulkhead plating is to be doubled or increased in thickness in way of the stern tube opening or propelling shaft opening, notwithstanding the requirements in 14.2.1.

14.2.3 The section modulus of bulkhead stiffeners is not to be less than that obtained from the following formula:

$2.8KCSh\,l^2$ cm^3

where:

K	=	Material factor as specified in 1.5.2(a) of this Part.
l	=	Span, in m, measured between the adjacent supports of stiffeners including the length of connection. Where girders are provided, l is the distance from the heel of the end connection to the first girder or the distance between the girders.
S	=	Breadth, in m, of the area supported by the stiffener.
h	=	Vertical distance, in m, measured from the mid-point of l for vertical stiffeners, and from the mid-point of S for horizontal stiffeners, to the top of the bulkhead deck at the centre line of the ship. Where the vertical distance is less than 6.0 meters, h is to be taken as 1.2 meters greater than 0.8 times the vertical distance.
C	=	Coefficient given in Table II 14-2, according to the type of end connections.

14.2.4 Corrugated Bulkheads

(a) The plate thickness of corrugated bulkheads is not to be less than that obtained from the following formula:

$3.4CS_1\sqrt{Kh} + 2.5$ mm, but not to be less than $5.9CS_1 + 2.5$ mm

where:

K	=	Material factor as specified in 1.5.2(a) of this Part.
h	=	As specified in 14.2.1.
S_1	=	Breadth, in m, of face part or web part indicated as a or b, respectively, in Fig. II 14-2 of this Chapter.
C	=	Coefficient for face part: $\dfrac{1.5}{\sqrt{1+\left(\frac{t_w}{t_f}\right)^2}}$
	=	Coefficient for web part: 1.0
t_w	=	Thickness, in mm, of plates of web.
t_f	=	Thickness, in mm, of plates of face.

(b) The actual section modulus per half pitch of corrugated bulkheads is to be greater than that obtained from the following formula:

$3.6KSh\,l^2$ cm^3

where:

K	=	Material factor as specified in 1.5.2(a) of this Part.
S	=	Half pitch length, in m, of the corrugation (See Fig. II 14-2).
h	=	As specified in 14.2.3.
l	=	Length, in m, between the supports, as indicated in Fig. II 14-3.
C	=	Coefficient given in Table II 14-3, according to the type of end connection.

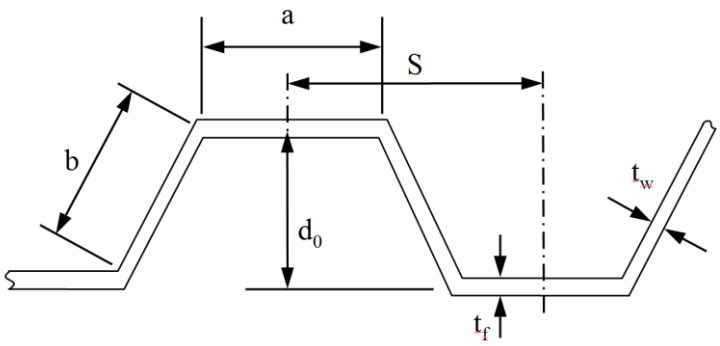

Fig. II 14-2
Measurement of S

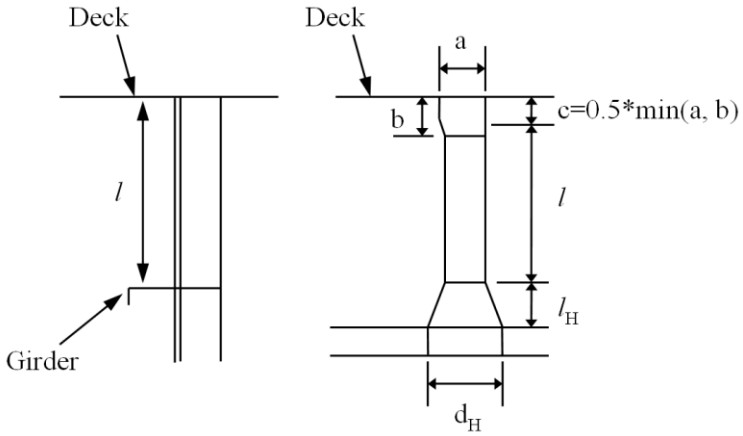

Fig. II 14-3
Measurement of *l*

(c) Where the end connection of corrugated bulkheads is remarkably effective, the value of C specified in (b) may be adequately reduced.

(d) The thickness of plates at end parts for 0.2*l* in line with *l* is not to be less than that obtained from the following formulae respectively:

Web part:

$$\frac{CKShl}{24d_0} + 2.5 \qquad \text{mm}$$

The web thickness is not to be less than that obtained from the following formula:

$$\sqrt[3]{\frac{CShlb^2}{0.19 \cdot d_0}} + 2.5 \qquad \text{mm}$$

Face part, except the upper end part of vertically corrugated bulkheads:

$$\frac{12a}{\sqrt{K}} + 2.5 \qquad \text{mm}$$

where:

K, S, h, *l* and d_0	=	As specified in (b).
a and b	=	Breadth, in m, of face part and web part, respectively.
C	=	Coefficient given in Table II 14-4. Where the vertically corrugated bulkheads are constructed with a single span, the value of C may be taken as the value for the uppermost span in the Table.

(e) The thickness of the plates specified in (a) and (d) is to be in accordance with 14.2.2.

(f) The actual section modulus per half pitch of corrugated bulkheads is to be calculated using the following formula:

$$167 \cdot (3at_f d_0 + bt_w d_0) \qquad cm^3$$

where:

a and b	=	Breadth, in m, of face part and web part, respectively.
t_f and t_w	=	Thickness, in mm, of plates of face part and web part, respectively.
d_0	=	Depth, in m, of corrugation.

14.2.5 For collision bulkheads, the plate thickness and section modulus of stiffeners are not to be less than that those specified in 14.2.1 and 14.2.3 or 14.2.4 taking h as 1.25 times the specified height.

14.2.6 Girders Supporting Bulkhead Stiffeners

(a) The section modulus of girders is to be greater than that obtained from the following formula:

$$4.75KShl^2 \qquad cm^3$$

where:

K	=	Material factor as specified in 1.5.2(a) of this Part.
S	=	Breadth, in m, of the area supported by the girder.
h	=	Vertical distance, in m, measured from the mid-point of *l* for vertical girders, and from the mid-point of S for horizontal girders, to the top of the bulkhead deck at the centre line of the ship. Where the vertical distance is less than 6.0 metres, h is to be taken as 1.2 meters greater than 0.8 times the vertical distance.
l	=	Span, in m, measured between the adjacent supports of girders *l* may be modified in accordance with 1.9 of this Part.

(b) The moment of inertia of girders is not to be less than that obtained from the following formula. The depth of girders is not to be less than 2.5 times the depth of slots for stiffeners.

$$10hl^4 \qquad cm^4$$

where:

h and *l* = As specified in (a).

(c) The thickness of web plates is not to be less than that obtained from the following formula:

$$10S_1 + 2.5 \qquad mm$$

where:

S_1 = Spacing, in m, of web stiffeners or depth of girders, whichever is smaller.

(d) The thickness of web plates at both end parts for 0.2*l* is not to be less than that obtained from the following formulae, whichever is greater:

$$\frac{CKShl}{24 \cdot d_0} + 2.5 \qquad mm$$

$$\sqrt[3]{\frac{ChlS_1^2}{0.19 \cdot d_0}} + 2.5 \qquad mm$$

where:

S, h and *l* = As specified in (a).

d_0	=	Depth, in m, of girders.
S_1	=	As specified in (c).
C	=	As specified in 14.2.4 (d).

(e) Tripping brackets are to be provided at intervals of about 3 meters and where the breadth of face plates exceeds 180 mm on either side of the girder, these brackets are to be so arranged as to support the face plates.

(f) The actual section modulus and moment of inertia of girders are to be calculated in accordance with 1.6.3 of this Part. Where stiffeners are provided within the effective breadth, they may be included in the calculation.

14.2.7 Plating of bulkheads, decks, inner bottoms, etc. are to be, if necessary, strengthened at the location of the end brackets of stiffeners and the end of girders.

14.2.8 Bulkhead Recesses

(a) In way of bulkhead recesses, beams are to be provided at every frame and under the upper bulkhead in accordance with the requirements in 9.2.1 and 14.2.3 taking the beam spacing as the stiffener spacing. Where the lower end of the upper bulkhead is especially strengthened, the beam under the upper bulkhead may be dispensed with.

(b) The thickness of deck plating forming the top of bulkhead recesses is to be at least 1.0 mm greater than that given by 14.2.1, regarding the deck plating as bulkhead plating and the beams as stiffeners. However, the thickness is not to be less than that required for deck plating in that location.

(c) The thickness of pillars supporting bulkhead recesses are to be determined taking into account the water pressure that might be applied on the upper surface of the recesses, and their end connections are to be sufficiently strong enough to withstand the water pressure which might be applied on the under surface.

14.2.9 Where stiffeners are cut or the spacing of stiffeners is increased in order to provide the watertight door in the bulkhead, the opening is to be suitably framed and strengthened as to maintain the full strength of the bulkhead. The door frames are not to be considered as stiffeners.

14.3 Watertight Doors

14.3.1 General

(a) All openings in the watertight bulkheads and the part of the deck which forms the step of the bulkheads are to be closed by watertight closing appliances (referred to as "watertight doors" in this chapter) in accordance with the requirements in 14.3.2 to 14.3.5.

(b) Watertight doors as specified in (a) above are to be normally closed at sea, except where deemed necessary for the ship's operation by the Society. Watertight doors or ramps fitted to internally subdivided cargo spaces are to be permanently closed at sea.

14.3.2 Types of Watertight Doors

(a) Watertight doors are to be of a sliding type.

(b) Notwithstanding the provisions in (a) above, watertight doors provided at small access openings, which are approved by the Society, may be of a hinged type or rolling type, except where the doors are required to be capable of being operated remotely by the provisions of 14.3.4(b).

(c) Notwithstanding the provisions in (a) above, watertight doors or ramps fitted to internally subdivided cargo spaces may be of a type other than the sliding type.

(d) Doors which are closed by dropping or by the action of a dropping weight are not permitted.

14.3.3 Strength and Watertightness

(a) Watertight doors are to be of ample strength and watertightness for water pressure to a head up to the bulkhead deck, and door frames are to be effectively secured to the bulkheads. Watertight doors are to be tested by water pressure before they are fitted other than those specified in the following (i) to (iii).

(i) The prototype of such doors has been tested by design water pressure.

(ii) The design of such doors has been verified to have enough strength and watertightness by direct structural analysis. Where watertight doors utilize gasket seals, a prototype pressure test to confirm that the compression of the gasket material is capable of accommodating any deflection is to be carried out.

(iii) Such doors are complying with a standard deemed appropriate by the Society.

(b) Hydrostatic tests specified in 14.3.3(a) are to be carried out as follows:

(i) The head of water used for the hydrostatic test is to correspond at least to the head measured from the lower edge of the door opening (at the location in which the door is to be fitted in the ship) to the bulkhead deck. However, for watertight doors subject to the damage stability requirements, the head is not to be less than the height of the final damage waterline or the intermediate waterline, whichever is greater.

(ii) The acceptable leakage rate at the test is not to be greater than the following values.

(1) Doors with gaskets: No leakage

(2) Doors with metallic sealing: 1.0 liter/min

(iii) Notwithstanding (ii) above, the following leakage rate may be accepted for hydrostatic tests on large doors located in cargo spaces employing gasket seals or guillotine doors located in conveyor tunnels.

(1) For doors of design head exceeding 6.1 m:

$$(P + 4.572) \cdot \frac{h^3}{6568} \qquad \text{liter/min}$$

Where P, in m, is the perimeter of door opening, and h, in m, is the test head of water.

(2) For doors with a design head not exceeding 6.10 m, the acceptable leakage rate is the value calculated by the formula specified in (1) above or 0.375 liter/min, whichever is greater.

(c) Where watertight doors are provided in cargo spaces, such doors are to be protected by suitable means against damage from items such as cargoes.

14.3.4 Control

(a) All watertight doors, except those which are to be permanently closed at sea, are to be capable of being opened and closed by hand locally, from both sides of the doors, with the ship listed 30 degrees to either side.

(b) In addition to the requirements of (a) above, watertight doors which are used at sea or normally open at sea are to be capable of being remotely closed by power from the navigation bridge.

(c) Watertight doors are not to be able to be opened remotely. In addition, watertight doors complying with the provisions of 14.3.2 (c) are not to be remotely controlled.

14.3.5 Indication

(a) Watertight doors, except those permanently closed at sea, are to be provided with position indicators showing whether the doors are open or closed on the bridge and at all operating positions.

(b) For watertight doors which are to be capable of being remotely closed, an indication is to be placed locally showing that the door is in remote control mode.

14.3.6 Watertight doors which are capable of being remotely closed are to be provided with an audible alarm which will sound at the door position whenever such a door is remotely closed.

14.3.7 Source of Power

(a) The remote controls, indications and alarms required in 14.3.4 to 14.3.6 are to be operable in the event of main power failure.

(b) Electrical installations for devices specified in (a) except those of a water-proof type approved by the Society are not to be under the freeboard deck.

(c) Cables for devices specified in (a) are to be protected by means deemed appropriate by the Society.

14.3.8 Notices

(a) Watertight doors which are to be normally closed at sea but not provided with a means of remote closure are to have notices fixed to both sides of the doors stating "To be kept closed at sea".

(b) Watertight doors which are to be permanently closed at sea are to have notices fixed to both sides stating "Not to be opened at sea". Such doors which are accessible during the voyage are to be fitted with a device which prevents unauthorized opening.

14.3.9 Sliding Doors

(a) Where a sliding watertight door is operated by rods, the lead of the operating rods is to be as direct as possible and the screw is to work in a nut of brass or other approved materials.

(b) The frames of vertically sliding watertight doors are not to have a groove at the bottom in which dirt might lodge and prevent the door from closing.

14.3.10 Hinged Doors and Rolling Doors

(a) For hinged and rolling watertight doors, the hinge pins and the wheel axle of these doors are to be of brass or other approved materials.

(b) Hinged and rolling watertight doors except those that are to be permanently closed at sea are to be of quick acting or single action type which is capable of being closed and secured from both sides of the doors.

14.4 Other Watertight Construction

14.4.1 For the application of this chapter, trunks required to maintain watertightness are to be capable of withstanding internal or external pressure under the most severe conditions at the intermediate or final stages of flooding.

Table II 14-2
Value of C

Vertical Stiffener				
Lower end	Upper end			
	Lug-connection or supported by horizontal girders	Connection		End of stiffener unattached
		Type A	Type B	
Lug-connection or supported by horizontal girders	1.00	1.00	1.15	1.35
Connected by brackets	0.80	0.80	0.90	1.00
stiffener web attached at end only	1.15	1.15	1.35	1.60
End of stiffener unattached	1.35	1.35	1.60	2.00

Horizontal Stiffener		
The other end	One end	
	Lug-connection, connected by brackets or supported by vertical girders	End of stiffener unattached
Lug-connection, connected by brackets or supported by vertical girders	1.00	1.35
End of stiffener unattached	1.35	2.00

Notes:

(1) Lug-connection is a connection where both webs and face plates of stiffeners are effectively attached to the bulkhead plating, decks or inner bottoms and which are strengthened by effective supporting members on the opposite side of the plating.

(2) " Type A" of vertical stiffeners is a connection by bracket to the longitudinal members or to the adjacent members, in line with the stiffeners, of the same or larger sections. (See Fig. II 14-1 (a))

(3) " Type B" of vertical stiffeners is a connection by bracket to the transverse members such as beams, or other connections equivalent to the connection mentioned above. (See Fig. II 14-1 (b))

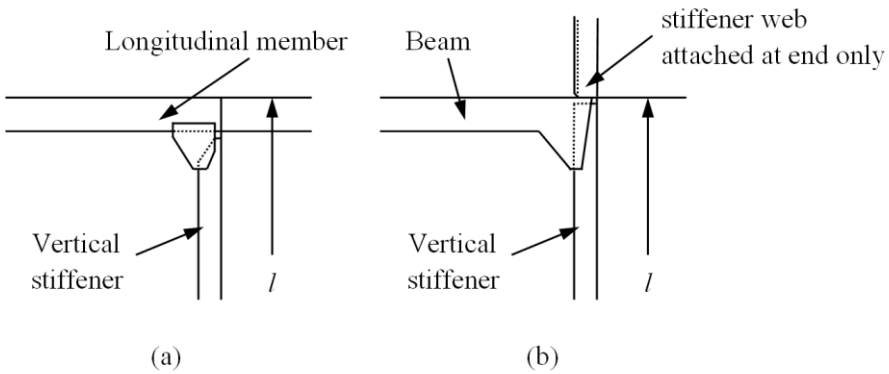

Fig. II 14-1
Types of End Connections

Table II 14-3
Value of C (for corrugated bulkheads)

The other end of bulkhead	One end of bulkhead		
	Supported by horizontal or vertical girders	Upper end welded directly to deck	Upper end welded to stool efficiently supported by ship structure
Supported by horizontal or vertical girders or lower end of bulkhead welded directly to decks or inner bottoms	$\frac{4Z_0}{2Z_0 + Z_1 + Z_2}$	$\frac{4Z_0}{2.2Z_0 + Z_2}$	$\frac{4Z_0}{2.6Z_0 + Z_2}$
Lower end of bulkhead welded to stool efficiently supported by ship structure	$\frac{4.8\left(1+\frac{l_H}{l}\right)^2}{2+\frac{Z_1}{Z_0}+\frac{d_H}{d_0}}$	$\frac{4.8d_0\left(1+\frac{l_H}{l}\right)^2}{2.2d_0 + d_H}$	$\frac{4.8d_0\left(1+\frac{l_H}{l}\right)^2}{2.6d_0 + d_H}$
	The value of C is not to be less than that obtained from 14.2.4 (a).		

Notes:

Z_0 : Minimum section modulus, in cm^3, per half pitch of mid part for $0.6l$ of the corrugated bulkhead

Z_1 and Z_2 :

Section modulus, in cm^3, per half pitch of end part
For vertical corrugation, Z_1 is the section modulus of the upper end part and Z_2 is that of the lower end part.
Where the plate thickness is increased in accordance with 14.2.4(e) the section modulus is to be that for the plate thickness reduced by the increment.

l_H : Height, in m, of stool measured from inner bottom plating

d_H : Breadth, in m, of stool measured on inner bottom plating

d_0 : Depth, in m, of corrugation

Table II 14-4
Value of C

Position		Upper end	Lower end
Vertically corrugated bulkhead	Uppermost span	0.4	1.6
	Other spans	0.9	1.1
Both ends of horizontally corrugated bulkhead		1.0	

Chapter 15

Non-Watertight Centerline Bulkheads in Cargo Spaces

15.1 Construction

15.1.1 The thickness of bulkhead plating is to be not less than that obtained from the following formulas:

$$t = 6 \quad \text{mm} \quad \text{for } s \leq 760 \text{ mm}$$

$$t = 6 + 0.5\left(\frac{s - 760}{150}\right) \quad \text{mm} \quad \text{for } s > 760 \text{ mm}$$

where:

s = Stiffener spacing, in mm.

15.1.2 Where the centerline bulkhead is arranged to support beams, stiffeners are to be of such scantlings as to provide supports equivalent to pillars as given in 10.6 of this Part. However, stiffeners are not to be less in depth than 150 mm in holds and 100 mm in tween decks.

Chapter 16

Deep Tanks

16.1 General

16.1.1 The deep tank is a tank used for the carriage of water, fuel oil and other liquids, forming a part of the hull in holds or tween decks. Deep tanks used for the carriage of oils that need to be especially specified are designated as "deep oil tanks".

16.1.2 Watertight divisions (other than those specified in 16.1.3(c), peak tank bulkheads, and boundary bulkheads of deep tanks are to be constructed in accordance with the requirements in this Chapter. Where the bulkhead of a deep tank partly serves as a watertight bulkhead, that part of the bulkhead is to be in accordance with the requirements in Chapter 14.

16.1.3 Tank Division

(a) Deep tanks are to be provided with such longitudinal watertight divisions as necessary to meet the requirements for stability in service conditions as well as while the tanks are being filled or discharged.

(b) Deep tanks for fresh water or fuel oil or those which are not intended to be kept entirely filled in service conditions are to have additional divisions or deep wash plates as necessary, to minimize the dynamic forces acting on the structure.

(c) Longitudinal watertight divisions which will be subjected to pressure from both sides in tanks which are to be entirely filled or emptied in service conditions may be of the scantlings required for ordinary watertight bulkheads as stipulated in Chapter 14. In such cases, the tanks are to be provided with fittings such as deep hatches and inspection plugs in order to ensure that the tanks are kept full in service conditions.

16.1.4 In wing tanks and hold tanks of which the length or breadth exceeds 0.1L+5.0, in m, and in topside tanks and hopper tanks, the thickness of girders, struts and their end brackets and bulkhead plates is not to be less than that given by Table II 16-1 in accordance with the length of ship.

Table II 16-1
Minimum Thickness

L, in m	≥	90	105	120	135	150	165	180	195	225	275
	<	105	120	135	150	165	180	195	225	275	--
Thickness, in mm		8.0	8.5	9.0	9.5	10.0	10.5	11.0	11.5	12.0	12.5

16.1.5 For large tank boundaries, the scantlings of bulkhead plates, stiffeners, girders and cross ties are not to be less than that obtained from the relevant formulae in 16.2.2, 16.2.3, 16.2.4, 16.2.5 and 16.2.6, where the value of h is that given by the following formula or the one specified in each requirement, whichever is greater.

$0.85(\mathrm{h} + \Delta\mathrm{h})$ m

where:

h = As specified in each requirement of 16.2.2(a) or of 16.2.3(a).

Δh = Additional water head as the following formula:

$$\frac{16}{\mathrm{L}}(l_{\mathrm{t}} - 10) + 0.25(\mathrm{b_t} - 10) \quad \mathrm{m}$$

l_t = Tank length, in m. Not to be less than 10 m.

b_t = Tank breadth, in m. Not to be less than 10 m, but may be 2/3B for ballast holds of bulk carrier with top side tanks.

16.2 Deep Tank Bulkheads

16.2.1 The construction of bulkheads and decks forming boundaries of deep tanks is to be in accordance with the requirements in Chapter 14, unless otherwise specified in this Chapter.

16.2.2 The thickness of deep tank bulkhead plating is not to be less than that obtained from the following formula:

$3.6S\sqrt{Kh} + 3.5$ mm

where:

S = Spacing of stiffeners, in m.

h = Greater of the distances given below:

(a) Vertical distance, in m, measured from the lower edge of plate to the midpoint of the distance between the top of tanks and the top of overflow pipes.

(b) 0.7 times the vertical distance, in m, measured from the lower edge of the plate to the point 2.0 m above the top of the overflow pipes.

K = Material factor as specified in 1.5.2 (a) of this Part

16.2.3 The section modulus of bulkhead stiffeners is not to be less than that obtained from the following formula:

$7CKSh\mathit{l}^2$ cm^3

where:

S and l = As specified in 14.2.3 of this Part.

h = Greater of the vertical distances given below, with the lower end being regarded as the mid-point of l for vertical stiffeners and as S for horizontal stiffeners.

(a) Vertical distance, in m, measured from the lower end to the midpoint of the distance between the top of the tanks and the top of the overflow pipes.

(b) 0.7 times the vertical distance, in m, measured from the lower end to the point 2.0 m above the top of the overflow pipes.

C = Coefficient given in Table II 16-2 of this Chapter, according to the type of end connections

K = Material factor as specified in 1.5.2 (a) of this Part

16.2.4 Corrugated Bulkheads

(a) The thickness of plates of corrugated bulkheads is not to be less than that obtained from the following formula:

$3.6CS_1\sqrt{Kh} + 3.5$ mm

where:

S_1 = As specified in 14.2.4(a) of this Part.

h = As specified in 16.2.2 of this Chapter.

C = Coefficient given below:

$= \dfrac{1.4}{\sqrt{1 + \left(\frac{t_w}{t_f}\right)^2}}$ for face part

= 1.0 for web part

t_f and t_w = As specified in 14.2.4(a) of this Part.

K = Material factor as specified in 1.5.2 (a) of this Part

(b) The section modulus per half pitch of corrugated bulkheads is not to be less than that obtained from the following formula:

$7CKSh\mathit{l}^2$ cm^3

where:

S	=	As specified in 14.2.4 (b) of this Part.
l	=	Length, in m, between the supports, as indicated in Fig II 16-1 of this Chapter.
C	=	Coefficient given in Table II 16-3 of this Chapter, according to the type of end connection.
h	=	As specified in 16.2.3 of this Chapter.
K	=	Material factor as specified in 1.5.2 (a) of this Part

For bulkheads with lower stools of which the width in the longitudinal direction at the lower end, d_H, is less than 2.5 times the web depth of the bulkhead, d_0 (See Fig. II 16-1), the measurement of l and the values of C are to be at the discretion of the Society.

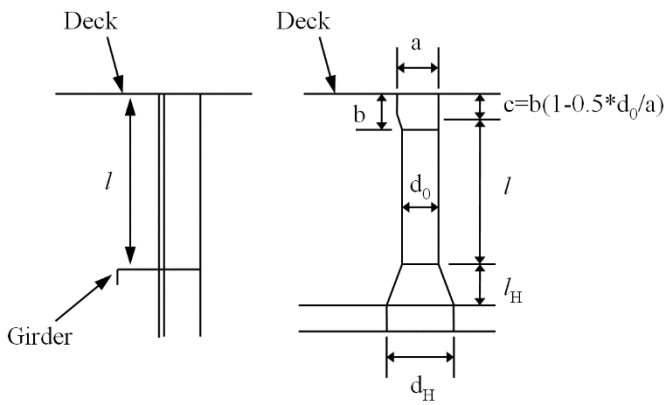

Fig. II 16-1
Measurement of *l*

(c) The thickness of plates at end parts for 0.2l in line with l is not to be less than that obtained from the following formulae:

Thickness of web:

$$\frac{CKSh\,l}{24 \cdot d_0} + 3.5 \qquad \text{mm}$$

Not to be less than that obtained from the following formula:

$$\sqrt[3]{\frac{CSh\,l\,b^2}{0.19 \cdot d_0}} + 3.5 \qquad \text{mm}$$

Thickness of the face part except the upper end part of vertically corrugated bulkheads:

$$\frac{12a}{\sqrt{K}} + 3.5 \qquad \text{mm}$$

where:

h	=	As specified in 16.2.3 of this Chapter.
C, S, d_0, a and b	=	As specified in 14.2.4 (d) of this Part.
l	=	As specified in (b).
K	=	Material factor as specified in 1.5.2 (a) of this Part

16.2.5 Girders Supporting Bulkhead Stiffeners

(a) The section modulus of girders is not to be less than that obtained from the following formula:

$7.13KSh\,l^2$ $\qquad$ cm^3

where:

S	=	Breadth, in m, of the area supported by the girders.
h	=	Vertical distance, in m, measured from the mid-point of S for horizontal girders, and from the mid-point of l for vertical girders, to the top of h specified in 16.2.3.
l	=	Span, in m, specified in 14.2.6 of this Part.
K	=	Material factor as specified in 1.5.2 (a) of this Part.

(b) The moment of inertia of girders is not to be less than that obtained from the following formula. The depth of girders is not to be less than 2.5 times the depth of slots for stiffeners.

$30Kh\,l^4$ $\quad cm^4$

where:

h and l	=	As specified in (a).
K	=	Material factor as specified in 1.5.2 (a) of this Part

(c) The thickness of web plates is not to be less than that obtained from the following formulae, whichever is the greatest:

$$\frac{CKSh\,l}{24 \cdot d_1} + 3.5 \quad \text{mm}$$

$$\sqrt[3]{\frac{CSh\,l S_1^2}{0.19 \cdot d_1}} + 3.5 \quad \text{mm}$$

$10S_1+3.5$ $\quad$ mm

where:

S, h, and l	=	As specified in (a).
S_1	=	Spacing of web stiffeners or the depth of girders, whichever is smaller, in m.
d_1	=	Depth of the girder at the location considered, reduced by the depth of slots for stiffeners, in m.
C	=	Coefficient obtained from the following formulae, but not to be less than 0.5.
		$\left\lvert 1 - 2\frac{x}{l} \right\rvert$ for horizontal girders
		$\left\lvert 1 + \frac{1}{5}\frac{l}{h} - \left(2 + \frac{l}{h}\right)\frac{x}{l} + \frac{l}{h}\left(\frac{x}{l}\right)^2 \right\rvert$ for vertical girders
x	=	Distance, in m, measured from the end of l for horizontal girders, and from the lower end of l for vertical girders, to the location considered.
K	=	Material factor as specified in 1.5.2 (a)

(d) The actual section modulus and moment of inertia of girders are to be calculated in accordance with the provisions in 14.2.6 (f).

16.2.6 Cross Ties

(a) Where efficient cross ties are provided across deep tanks connecting girders on each side of the tanks, the span of girders specified in 16.2.5 may be measured between the end of the girder and the centre line of the cross tie or between the centre lines of adjacent cross ties.

(b) The sectional area of cross ties is not to be less than that obtained from the following formula:

$1.3Sb_s h$ $\quad cm^2$

where:

h and S	=	As specified in 16.2.5.
b_s	=	Breadth, in m, of the area supported by the cross ties.

(c) The ends of cross ties are to be bracketed to girders.

16.2.7 The scantlings of the members forming the top or the bottom of deep tanks are to be in accordance with the requirements in this Chapter, where the members are treated as if they were members forming a deep tank bulkhead at that location. The scantlings of the members are not to be less than that required by the other requirements for the construction of the tank top as well as the bottom. For top plating of deep tanks, the thickness of plates is to be at least 1 mm greater than that of the thickness specified in 16.2.2.

16.2.8 The thickness of plates of bulkheads and girders which are not in contact with sea water in service conditions may be reduced from the requirements in 16.2.2, 16.2.4 and 16.2.5 by the values given below:

For plates with only one side in contact with sea water: 0.5 mm
For plates with neither side in contact with sea water: 1.0 mm

However, bulkhead plates in way of locations such as bilge wells are to be regarded as plates in contact with sea water.

16.3 Fittings of Deep Tanks

16.3.1 Limbers and air holes are to be cut suitably in the structural members to ensure that air or water does not remain stagnated in any part of the tank.

16.3.2 Efficient arrangements are to be made for draining bilge water from the top of deep tanks.

16.3.3 The inspection plugs provided on deep tank tops as required in 16.1.3 are to be located in readily accessible positions, and the plugs are to be open as far as is practicable when filling the tank with water.

16.3.4 Cofferdams

(a) Oiltight cofferdams are to be provided between the tanks carrying oils and those carrying fresh water, such as for personnel use or boiler feed water, to prevent the fresh water from being contaminated by the oil.

(b) Crew spaces and passenger spaces are not to be directly adjacent to tanks carrying fuel oil. Such compartments are to be separated from the fuel oil tanks by cofferdams which are well ventilated and accessible. Where the top of fuel oil tanks have no opening and is coated with incombustible coverings of not less than 38 mm in thickness, the cofferdam between such compartments and the top of the fuel oil tanks may be omitted.

16.4 Welding of Corrugated Bulkheads

16.4.1 The welding of corrugated bulkheads is to be in accordance with Table II 16-4.

16.4.2 For the supporting members of corrugated bulkheads or stools, such as floors, girders or other primary supporting members and stiffeners, fillet weld leg length is to be suitably increased or to be beveled and welded. In cases where the angle between the side plating of a lower stool and inner bottom plating is relative small, the fillet weld leg lengths for supporting members to inner bottom plating are to be suitably increased taking into account such an angle.

16.4.3 In cases where stools are fitted, the fillet weld leg length for the top or bottom plating of stools to the side plating of stools as well as the side plating of stools to inner bottom plating is to be suitably increased or to be beveled and welded.

16.4.4 Where shedder plates are fitted at the lower parts of corrugated bulkheads, the welding to the corrugation and the top plate of the lower stool is to be one-side penetration welds or equivalent.

16.4.5 Where gusset plates are fitted at the lower parts of corrugated bulkheads, the welding to the top of the lower stool is to be either full penetration or deep penetration welds.

Table II 16-2
Values of C

The other end of stiffeners		One end of stiffeners			
		Lug-connection or supported by girders	Connection		End of stiffener unattached
			Type A	Type B	
Lug-connection or supported by girders		1.0	0.85	1.30	1.50
Connected	Type A	0.85	0.70	1.15	1.30
	Type B	1.30	1.15	0.85	1.15
End of stiffener unattached		1.50	1.30	1.15	1.50

Notes:

1. "Type A" is a connection by bracket of the stiffener to the double bottom or to a stiffener of equivalent strength attached to the face plates of adjacent members, or a connection of equivalent strength. (See Fig. II 14-1 (a))
2. "Type B" is a connection by bracket of the stiffener to transverse members such as beams, frames or the equivalent thereto. (See Fig. II 14-1 (b))

Table II 16-3
Values of C

Lower end	Upper end		
	Supported by Girders	Welded directly to deck	Welded to stool efficiently supported by ship structure
Supported by girders or welded directly to decks or inner bottoms	1.00	1.50	1.35
Welded to stool efficiently supported by ship structure	1.50	1.20	1.00

Table II 16-4
Welding of Corrugated Bulkheads

Type of Corrugated bulkhead		Application	Welding
Vertically corrugated bulkhead	Without stool	Upper deck	Double continuous fillet welding with a fillet weld leg length that is not less than 0.7 times the thickness of the corrugated bulkhead.
		Inner bottom	(1) For ships having a length, L_1, of 150 m and above: Full penetration double bevel welds (2) For ships having a length, L_1, that is less than 150 m: Full penetration double bevel welds for webs and flanges of the corrugated bulkhead that are within about 200 mm from the corner of the corrugation For other parts, double continuous fillet welding with a fillet weld leg length that is not less than 0.7 times the thickness of the corrugated bulkhead.
		Corrugated bulkhead	Full penetration double bevel welds
	Lower stool	Top plate	(1) For ships having a length, L_1, of 150 m and above: Full penetration double bevel welds (2) For ships having a length, L_1, that is less than 150 m: Full penetration double bevel welds for webs and flanges of the corrugated bulkhead that are within about 200 mm from the corner of the corrugation For other parts, double continuous fillet welding with a fillet weld leg length that is not less than 0.7 times the thickness of the corrugated bulkhead.
	Upper stool	Bottom plate	Double continuous fillet welding with fillet weld leg length that is not less than 0.7 times the thickness of the corrugated bulkhead.
Horizontally corrugated bulkhead		Upper deck, Inner bottom, Corrugated bulkhead	Double continuous fillet welding with a fillet weld leg length that is not less than 0.7 times the thickness of the corrugated bulkhead.
Note: L_1 is the length, in m, of ship specified in 1.2.1 or 0.97 times the length, in m, of the ship on the load line, whichever is smaller.			

Chapter 17

Hatchways, Machinery Space Openings and Other Deck Openings

17.1 General

17.1.1 The requirements in this Chapter may be specially considered for the ship with an unusually large freeboard.

17.1.2 Position of Exposed Deck Openings

(a) For the purpose of this Chapter, two positions of exposed deck openings are defined as follows:

Position 1 :

Upon exposed freeboard and raised quarter decks, and upon exposed superstructure decks situated forward of a point located a quarter of the ship's length for freeboard, L_f, from the forward perpendicular.

Position 2 :

Upon exposed superstructure decks situated abaft a quarter of the ship's length for freeboard, L_f, from the forward perpendicular and located at least one standard height of superstructure above the freeboard deck, or upon exposed superstructure decks situated forward of a point located a quarter of the ship's length for freeboard, L_f, from the forward perpendicular and located at least two standard heights of superstructure above the freeboard deck.

(b) The forward perpendicular mentioned in (a) is to be taken at the forward end of length of ship for freeboard, L_f, as defined in 1.2.10 of this Part. The forward perpendicular is to coincide with the foreside of the stem on the waterline on which the Length is measured.

17.1.3 Renewal Thickness of Steel Hatchway Covers and Hatchway Coamings for Ships in Operation

Structural drawings for hatch covers and hatch coamings complying with the requirements of 17.2 are to indicate the renewal thickness, $t_{renewal}$, for each structural element given by the following formula in addition to the as built thickness, $t_{as\text{-}built}$. If the thickness for voluntary addition is included in the as built thicknesses, the value may be at the discretion of the Society.

$t_{renewal} = t_{as\text{-}built} - t_c + 0.5$ mm

where:

t_c = Corrosion additions specified in Table II 17-1

Where corrosion addition t_c is 1.0, in mm, renewal thickness may be given by the formula:

$t_{renewal} = t_{as\text{-}built} - t_c$ mm

17.2 Hatchways

17.2.1 Application

(a) The construction and the means for closing of cargo and other hatchways are to comply with the requirements in 17.2.

(b) When the loading condition or the type of construction differs from that specified in this section, the calculation method used is to be as deemed appropriate by the Society.

17.2.2 General Requirement

(a) Primary supporting members and secondary stiffeners of hatch covers are to be continuous over the breadth and length of hatch covers. When this is impractical, appropriate arrangements are to be adopted to ensure sufficient load carrying capacity and sniped end connections are not to be allowed.

(b) The spacing of primary supporting members parallel to the direction of secondary stiffeners is not to exceed 1/3 of the span of the primary supporting members.

(c) Secondary stiffeners of hatch coamings are to be continuous over the breadth and length of said hatch coamings.

17.2.3 Net Scantling Approach

(a) Unless otherwise specified, the structural scantlings specified in this section are to be net scantlings which do not include any corrosion additions.

(b) "Net scantlings" are the scantlings necessary to obtain the minimum net scantlings required by 17.2.5 and 17.2.9.

(c) Required gross scantlings are not to be less than the scantlings obtained from adding the corrosion addition t_c specified in (d) below to the net scantlings obtained from the requirements in this section.

(d) The corrosion addition t_c is to be taken as specified in Table II 17-1 according to ship type, the type of structure and structural members of steel hatchway covers, steel pontoon covers and steel weathertight covers (hereinafter referred to as "steel hatch covers").

(e) Strength calculations using beam theory, grillage analysis or FEM are to be performed with net scantlings.

17.2.4 Design Loads

The design loads for steel hatchway covers, steel pontoon covers, steel weathertight covers, portable beams and hatchway coamings applying the requirements in 17.2 are specified in following (a) to (e):

(a) Design vertical wave load P_V, in kN/m^2, is not to be less than that obtained from Table II 17-2. Design vertical wave loads need not to be combined with cargo loads according to (c) and (d) simultaneously.

(b) Design horizontal wave load P_H, in kN/m^2, is not to be less than that obtained from the following formulae. However, P_H is not to be taken less than the minimum values given in Table II 17-3 of this Chapter. P_H needs not be included in the direct strength calculation of the hatch cover, except where structures supporting stoppers are assessed.

$P_H = ac(bC_1 - y)$

where:

a = As given by the following:

= $20 + \frac{L'}{12}$ for unprotected front coamings and hatch cover skirt plates

= $10 + \frac{L'}{12}$ for unprotected front coamings and hatch cover skirt plates, where the distance from the actual freeboard deck to the summer load line exceeds the minimum non-corrected tabular freeboard according to the ILCC by at least one superstructure standard height

= $5 + \frac{L'}{15}$ for side and protected front coamings and hatch cover skirt plates

= $7 + \frac{L'}{100} - 8\frac{x}{L}$ for aft ends of coamings and aft hatch cover skirt plates abaft amidships

= $5 + \frac{L'}{100} - 4\frac{x}{L}$ for aft ends of coamings and aft hatch cover skirt plates forward of amidships

L' = Length of ship L, in m. However, where L exceeds 300 m, L' is to be taken as 300 m.

L = Length of ship specified in 1.2.1 of this Part.

C_1 = As given by the following formulae:

= $10.75 - \left(\frac{300 - L}{100}\right)^{1.5}$ for $L \leq 300$

= 10.75 for $300 < L \leq 350$

$= 10.75 - \left(\frac{L-350}{150}\right)^{1.5}$ for $350 < L$

b = As given by the following formula:

$= 1.0 + \left(\frac{0.45 - \frac{x}{L}}{C_{b1} + 0.2}\right)^2$ for $\frac{x}{L} < 0.45$

$= 1.0 + 1.5\left(\frac{\frac{x}{L} - 0.45}{C_{b1} + 0.2}\right)^2$ for $\frac{x}{L} \geq 0.45$

x = Distance, in m, from the hatchway coamings or hatch cover skirt plates to after perpendicular, or distance from the mid-point of the side hatchway coaming or hatch cover skirt plates to after perpendicular. However, where the length of the side hatchway coaming or hatch cover skirt plates exceeds 0.15 L, the side hatchway coaming or hatch cover skirt plates are to be equally subdivided into spans not exceeding 0.15 L and the distance from the mid-point of the subdivisions to the after perpendicular is to be taken.

C_{b1} = Block coefficient. However, where C_b is 0.6 or under, C_{b1} is to be taken as 0.6 and where C_b is 0.8 and over, C_{b1} is to be taken as 0.8. When determining scantlings of the aft ends of coamings and aft hatch cover skirt plates forward of amidships, C_{b1} does not need to be taken as less than 0.8.

c = As given by the following formula. However, where $\frac{b'}{B'}$ is less than 0.25, $\frac{b'}{B'}$ is to be taken as 0.25.

$= 0.3 + 0.7\frac{b'}{B'}$

b' = Breadth, in m, of hatchway coamings at the position under consideration

B' = Breadth, in m, of ship on the exposed weather deck at the position under consideration

y = Vertical distance, in m, from the designed maximum load line to the mid-point of the span of stiffeners when determining the scantlings of stiffeners and to the mid-point of the plating when determining the thickness of plating

(c) The load on hatch covers due to cargo loaded on said covers is to be obtained from the following (i) and (ii). Load cases with partial loading are also to be considered.

(i) Distributed load due to cargo load P_{cargo}, in kN/m^2, resulting from heave and pitch is to be determined according to the following formula:

$P_{cargo} = P_C(1 + a_v)$

where:

P_C = Static uniform cargo load, in kN/m^2

a_v = Acceleration addition given by the following formula:

$$a_v = \frac{0.11mV'}{\sqrt{L}}$$

m = As given by the following formulae:

$= m_0 - 5(m_0 - 1)\frac{x}{L}$ for $0 \leq \frac{x}{L} \leq 0.2$

$= 1.0$ for $0.2 < \frac{x}{L} \leq 0.7$

$= 1 + \frac{m_0 + 1}{0.3}\left(\frac{x}{L} - 0.7\right)$ for $0.7 < \frac{x}{L} \leq 1.0$

m_0 = As given by the following formula:

$$m_0 = 1.5 + \frac{0.11V'}{\sqrt{L}}$$

V' = Speed of ship, in knots, specified in 1.2.7. However, where V' is less than $\sqrt{L}$, V' is to be taken as $\sqrt{L}$.

x and L = As specified in (b) above

(ii) Point load F_{cargo} , in kN, due to a single force resulting from heave and pitch (e.g. in the case of containers) is to be determined by the following formula. When the load case of a partially loaded container is considered, the point load is at the discretion of the Society.

$F_{cargo}=F_s(1+a_v)$

where:

F_S	=	Static point load due to cargo, in kN
a_v	=	As specified in (i) above

(d) Where containers are stowed on hatch covers, cargo loads determined by the following (i) to (iii) are to be considered:

(i) Cargo loads, in kN, due to heave, pitch and roll motion of the ship determined by the following formulae are to be considered (see Fig. II 17-1 of this Chapter). When the load case of a partially loaded container is considered, the cargo load is at the discretion of the Society.

$$A_z = 9.81\frac{M}{2}(1+a_v)\left(0.45-0.42\frac{h_m}{b}\right)$$
$$B_z = 9.81\frac{M}{2}(1+a_v)\left(0.45+0.42\frac{h_m}{b}\right)$$
$$B_Y = 2.4M$$

where:

M	=	Maximum designed mass of container stack, in ton
h_m	=	Design height of the centre of gravity of the stack above hatch cover supports, in m
b	=	Distance between foot points, in m
A_Z and B_Z	=	Support forces in vertical direction, in kN, at the forward and aft stack corners
B_Y	=	Support force, in kN, in transverse direction at the forward and aft stack corners
a_v	=	As specified in (c) above

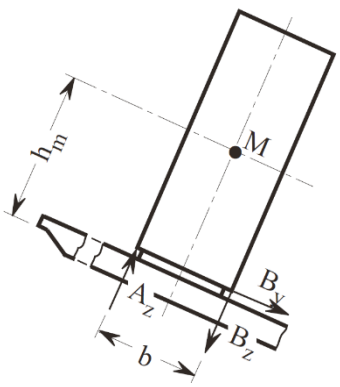

Fig. II 17-1
Forces due to Container Loads

(ii) Details of the application of (i) above are to be in accordance with the following:

(1) For the maximum design mass of container stack M and the design height of the centre of gravity of the stack above hatch cover supports h_m, it is recommended to apply the values which are used for the calculations of cargo securing (container lashing). If different assumptions are made for M and h_m, sufficient data which show that the hatch cover structure is not loaded by less than the recommended values is to be submitted.

(2) When the strength of a hatch cover structure is assessed by FEM analysis using shell or plane strain elements, h_m may be taken as the design height of the centre of gravity of the stack above the hatch cover top plate.

(3) The values of M and h_m applied for the assessment of hatch cover strength are to be shown in the drawings of the hatch covers.

(4) In the case of container stacks secured to lashing bridges or carried in cell guides, the forces acting on the hatch covers may be specially considered by the Society.

(5) Container loads may be applied based on accelerations calculated by an individual acceleration analysis for the lashing system being used as deemed appropriate by the Society.

(iii) Stack load P_{stack} (kN), acting on each corner of a container stack, due to heave and pitch (e.g. ship in upright condition) is to be determined by the following formula.

$$P_{stack} = 9.81\frac{M}{4}(1 + a_V)$$

where

a_V = As specified in (c)(i) above

M = As specified in (i) above

(e) In addition to the loads specified in (a) to (d) above, when the load in the ship's transverse direction by forces due to elastic deformation of the ship's hull is acting on the hatch covers, the sum of stresses is to comply with the permissible values specified in 17.2.5(a)(i).

17.2.5 Strength Criteria of Steel Hatch Covers and Hatch Beams

(a) Permissible stresses and deflections

(i) The equivalent stress σ_E, in N/mm^2, in steel hatchway covers and steel weathertight covers is to comply with the criteria in the following (1) and (2):

(1) For beam element calculations and grillage analysis:

$$\sigma_E = \sqrt{\sigma^2 + 3\tau^2} \leq 0.8\sigma_F$$

where:

σ = Nominal stress, in N/mm^2

τ = Shear stress, in N/mm^2

σ_F = Minimum upper yield stress, in N/mm^2, or proof stress, in N/mm^2, of the material. However, when material with σ_F of more than 355 N/mm^2 is used, the value for σ_F is to be as deemed appropriate by the Society.

(2) For FEM calculations, in cases where the calculations use shell or plane strain elements, the stresses are to be taken from center of the individual element.

$\sigma_E = \sqrt{\sigma_x^2 - \sigma_x\sigma_y + \sigma_y^2 + 3\tau^2} \leq 0.8\sigma_F$, when assessed using the design load specified in 17.2.4(a), and

$\sigma_E = \sqrt{\sigma_x^2 - \sigma_x\sigma_y + \sigma_y^2 + 3\tau^2} \leq 0.9\sigma_F$, when assessed using any other design loads

where:

σ_x = Normal stress, in N/mm^2, in the x-direction

σ_y = Normal stress, in N/mm^2, in the y-direction

τ = Shear stress, in N/mm^2, in the x-y plane

x, y = Coordinates of a two dimensional Cartesian system in the plane of the considered structural element

σ_F = As specified in (1) above

(ii) The equivalent stress σ_E, in N/mm^2, in steel pontoon covers and hatch beams is not to be greater than $0.68\sigma_F$,where σ_F is as specified in (i) above.

(iii) Deflection is to comply with following (1) and (2):

(1) When the design vertical wave load specified in 17.2.4(a) is acting on steel hatchway covers, steel pontoon covers, steel weathertight covers and portable beams, the vertical deflection of primary supporting members is not to be taken as more than that given by the following:

$0.0056l$ for steel hatchway covers and steel weathertight covers

$0.0044l$ for steel pontoon covers and hatch beams

l = Span of primary supporting members, in m

(2) Where steel hatch covers are arranged for carrying containers and mixed stowage is allowed, i.e., a 40-foot container is stowed on top of two 20-foot containers, particular attention is to be paid to the deflections of hatch covers. In addition the possible contact of deflected hatch covers within hold cargo has to be observed.

(iv) For FEM calculations, equivalent stress σ_E (N/mm^2) in girders with unsymmetrical flanges of steel hatchway covers and steel weathertight covers is to be determined according to the following (1) or (2):

(1) FEM calculations using the stress obtained for fine mesh elements; or

(2) FEM calculations using the stress at the edge of the element or the stress at the centre of the element, whichever is greater.

(b) Local net plate thickness of steel hatch covers

(i) The local net thickness t_{net}, in mm, of steel hatch cover top plating is not to be less than that obtained from the following formula, and it is not to be less than 1% of the spacing of the stiffeners or 6 mm, whichever is greater:

$$t_{net} = 15.8 F_P S \sqrt{\frac{P_{HC}}{0.95\sigma_F}}$$

where:

F_P = Coefficient given by the following formula:

= $\frac{1.9\sigma}{\sigma_a}$ (for $\frac{\sigma}{\sigma_a} \geq 0.8$, for the attached plate flange of primary supporting members)

= 1.5 (for $\frac{\sigma}{\sigma_a} < 0.8$, for the attached plate flange of primary supporting members)

σ = Normal stress, in N/mm^2, of the attached plate flange of primary supporting members. The normal σ may be determined at a distance S from the webs of adjacent primary supporting members perpendicular to secondary stiffeners and at a distance S/2 from the web of an adjacent primary supporting member parallel to secondary stiffeners, whichever is greater (see Fig. II 17-2). The distribution of normal stress σ between two parallel girders is to be in accordance with 17.2.5(f)(iii)(3).

σ_a = Permissible stress, in N/mm^2, is to be as given by following formula:

$\sigma_a = 0.8\sigma_F$

S = Stiffener spacing, in m

P_{HC} = Design load, in N/mm^2, specified in 17.2.4(a) and 17.2.4(c)(i)

σ_F = Minimum upper yield stress or proof stress of the material, in N/mm^2

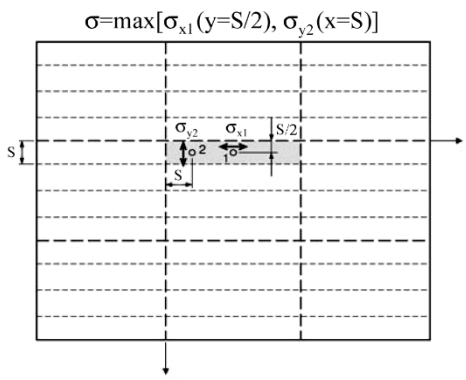

Fig. II 17-2
Determination of the Normal Stress of Hatch Cover Plating

(ii) The net thickness of double skin hatch covers and box girders is to be obtained in accordance with 17.2.5(e) below taking into consideration of the permissible stresses specified in 17.2.5(a)(i)

(iii) In addition to (ii) above, when the lower plating of double skin hatch covers is taken into account as a strength member of the hatch cover, the net thickness t_{net} of the lower plating is not to be less than 5 mm.

(iv) When lower plating is not considered to be a strength member of the hatch cover, the thickness of the lower plating is to be determined as deemed appropriate by the Society.

(v) When cargo likely to cause shear buckling is intended to be carried on a hatch cover, the net thickness t_{net}, in mm is not to be less than that obtained from the following formulae. In such cases, "cargo likely to cause shear buckling" refers particularly to large or bulky cargo lashed to the hatch cover, such as parts of cranes or wind power stations, turbines, etc. Cargo that is considered to be uniformly distributed over the hatch cover (e.g., timber, pipes or steel coils) does not need to be considered.

$t_{net} = 6.5S$
$t_{net} = 5$

(c) Net scantling of secondary stiffeners

(i) The net section modulus Z_{net}, in cm^3, of the secondary stiffeners of hatch cover top plates, based on stiffener net member thickness, is not to be less than that obtained from the following formula. The net section modulus of the secondary stiffeners is to be determined based on an attached plate width that is assumed to be equal to the stiffener spacing.

$$Z_{net} = \frac{K_L S P_{HC} l^2}{\sigma_F}$$

where:

K_L	=	Design loads coefficient, 104 for design loads specified in 17.2.4(a) above and 93 for loads specified in 17.2.4(c)(i) above
l	=	Secondary stiffener span, in m, is to be taken as the spacing of primary supporting members or the distance between a primary supporting member and the edge support, as applicable.
S	=	Stiffener spacing, in m
P_{HC}	=	Design load, in kN/m^2, as specified in 17.2.5(b)(i) above
σ_F	=	Minimum upper yield stress, N/mm^2, or proof stress, N/mm^2, of the material

(ii) The net shear sectional area A_{net}, in cm^2, of the secondary stiffener webs of hatch cover top plates is not to be less than that obtained from the following formula:

$$A_{net} = \frac{K_L S P_{HC}\, l}{\sigma_F}$$

where:

K_L	=	Design loads coefficient, 10.8 for design loads specified in 17.2.4(a) above and 9.6 for loads specified in 17.2.4(c)(i) above
l, S, P_{HC}, σ_F	=	As specified in (i) above

(iii) For flat bar secondary stiffeners and buckling stiffeners, the following formula is to be applied:

$$\frac{h}{t_{W,net}} \leq 15\sqrt{k}$$

where:

h	=	Height, in mm, of the stiffener
$t_{W,net}$	=	Net thickness, in mm, of the stiffener
k	=	$235/\sigma_F$
σ_F	=	As specified in (i) above

(iv) Stiffeners parallel to primary supporting members and arranged within the effective breadth according to 17.2.5(e)(ii) of this Chapter are to be continuous at crossing primary supporting member and may be regarded for calculating the cross sectional properties of primary supporting members.

(v) The combined stress of those stiffeners induced by the bending of primary supporting members and lateral pressures is not to exceed the permissible stresses according to 17.2.5(a)(i) of this Chapter.

(vi) For hatch cover stiffeners under compression, sufficient safety against lateral and torsional buckling according to 17.2.5(f)(iii) of this Chapter is to be verified.

(vii) For secondary stiffeners of the lower plating of double skin hatch covers, the requirements in (i) and (ii) above do not need to be applied due to the absence of lateral loads.

(viii) The net thickness (mm) of a stiffener (except for U-type stiffeners) web is not to be taken as less than 4 mm.

(ix) Single-side welding is not permitted for secondary stiffeners, except for U-type stiffeners.

(x) The requirements in this (c) do not need to be applied to stiffeners of the lower plating of double skin hatch covers in cases where the lower plating is not considered to be a strength member.

(d) Primary supporting members of steel hatch covers and hatch beams

(i) Scantlings of the primary supporting members of steel hatch covers and hatch beams are to be determined according to 17.2.5(e) below taking into consideration the permissible stresses specified in 17.2.5(a)(i).

(ii) Scantlings of the primary supporting members of steel hatch covers and hatch beam with variable cross-sections are to be not less than that obtained from the following formulae. For steel hatchway covers, S and *l* are to be read as b and S, respectively.

The net section modulus, in cm^3, of hatch beams or primary supporting members at the mid-point

$$Z_{net} = Z_{net\_cs}$$
$$Z_{net} = k_1 Z_{net\_cs}$$

The net moment of inertia, in cm^4, of hatch beams or primary supporting members at the mid-point

$$I_{net} = I_{net\_cs}$$
$$I_{net} = k_2 I_{net\_cs}$$

where:

Z_{net_cs}	=	Net section modulus, in cm^3, complying with requirement (i) above
I_{net_cs}	=	Net moment of inertia, in cm^4, complying with requirement (i) above
S	=	Spacing, in m, of portable beams or primary supporting members
l	=	Unsupported span, in m, of portable beams or primary supporting members
b	=	Width, in m, of steel hatch covers
k_1 , k_2	=	Coefficients obtained from the formulae given in Table II 17-4

(iii) In addition to (i) and (ii) above, the scantlings of the primary supporting members of steel hatch covers are to comply with the requirements specified in 17.2.5(f).

(iv) When biaxial compressed flange plates are considered, the effective width of flange plates is to comply with 17.2.5(f)(iii).

(v) In addition to (i) to (iv) above, net thickness t_{net} , in mm, of the webs of primary supporting members is not to be less than that obtained from the following formulae, whichever is greater:

$$t_{net} = 6.5S$$
$$t_{net} = 5$$

where:

S = Stiffener spacing, in m

(vi) In addition to (i) to (v) above, the net thickness t_{net} , in mm, of edge girders exposed to sea wash is not to be less than that obtained from the following formulae, whichever is greater:

$$t_{net} = 15.8S\sqrt{\frac{P_H}{0.95\sigma_F}}$$

$$t_{net} = 8.5S$$

where:

P_H	=	Design horizontal wave load in kN/m^2, as specified in 17.2.4(b)
S	=	Stiffener spacing, in m
σ_F	=	Minimum upper yield stress or proof stress of the material, in N/mm^2

(vii) The moment of inertia, in cm^4, of the edge elements of hatch covers is not to be less than that obtained from the following formula:

$$I = 6pa^4$$

where:

a	=	Maximum of the distance a_i, in m, between two consecutive securing devices, measured along the hatch cover periphery, not to be taken as less than $2.5a_C$, in m (see Fig. II 17-3)
a_C	=	$\max(a_{1.1}, a_{1.2})$, in m (see Fig. II 17-3)
p	=	Packing line pressure, in N/mm, minimum 5.0 N/mm

When calculating the actual gross moment of inertia of edge elements, the effective breadth of the attached plating of hatch covers is to be taken as equal to the lesser of 0.165a, or half the distance between the edge element and the adjacent primary member.

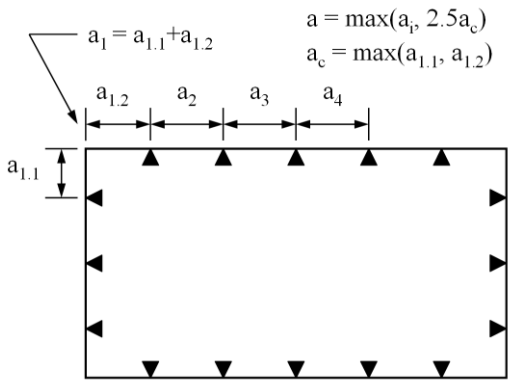

Fig. II 17-3
Distance between Securing Devices, Measured Along Hatch Cover Periphery

(e) Strength calculation

(i) Strength calculation for steel hatch covers may be carried out by either using beam theory, grillage analysis or FEM. Net scantlings are to be used for modeling. Strength calculations for double skin hatch covers or hatch covers with box girders are to be assessed using FEM, as specified in 17.2.5 (e)(iii) as below.

(ii) Effective cross-sectional properties for calculation by beam theory or grillage analysis are to be determined by the following (1) to (5):

(1) The effective breadth of the attached plating e_m of the primary supporting members specified in Table II 17-5 according to the ratio of *l* and e is to be considered for the calculation of effective cross-sectional properties. For intermediate values of *l*/e, e_m is to be obtained by linear interpolation.

(2) Separate calculations may be required for determining the effective breadth of one-sided or non-symmetrical flanges.

(3) The effective cross sectional areas of plates is not to be less than the cross sectional area of the face plate.

(4) The cross sectional area of secondary stiffeners parallel to the primary supporting member under consideration within the effective breadth may be included in the calculations (see Fig. II 17-5).

(5) For flange plates under compression with secondary stiffeners perpendicular to the web of the primary supporting member, the effective width is to be determined according to 17.2.5(f)(iii).

(iii) General requirements for FEM are as follows:

(1) The structural model is to be able to reproduce the behavior of the structure with the highest possible fidelity. Stiffeners and primary supporting members subject to pressure loads are to be included in the modelling. However, buckling stiffeners may be disregarded for stress calculation.

(2) Net scantlings which exclude corrosion additions are to be used for modeling.

(3) Element size is to be suitable to take effective breadth into account.

(4) In no case is element width to be larger than stiffener spacing. The ratio of element length to width is not to exceed 4.0.

(5) The element height of the webs of primary supporting members is not to exceed one-third of the web height.

(6) Stiffeners may be modelled using shell elements, plane stress elements or beam elements.

(f) Buckling strength of steel hatch covers

The buckling strength of the structural members of steel hatch covers is to be in accordance with the following (i) to (iii):

(i) The buckling strength of a single plate panel of the top and lower steel hatch cover plating is to comply with the following formulae:

$$\left(\frac{|\sigma_x|C_{sf}}{\kappa_x\sigma_F}\right)^{e_1} + \left(\frac{|\sigma_y|C_{sf}}{\kappa_y\sigma_F}\right)^{e_2} - B\left(\frac{\sigma_x\sigma_y C_{sf}^2}{\sigma_F^2}\right) + \left(\frac{|\tau|C_{sf}\sqrt{3}}{\kappa_\tau\sigma_F}\right)^{e_3} \leq 1.0$$

$$\left(\frac{|\sigma_x|C_{sf}}{\kappa_x\sigma_F}\right)^{e_1} \leq 1.0$$

$$\left(\frac{|\sigma_y|C_{sf}}{\kappa_y\sigma_F}\right)^{e_2} \leq 1.0$$

$$\left(\frac{|\tau|C_{sf}\sqrt{3}}{\kappa_\tau\sigma_F}\right)^{e_3} \leq 1.0$$

where:

σ_x, σ_y = Membrane stress in the x-direction and the y-direction, in N/mm^2. In cases where the stresses are obtained from FEM and already contain the Poisson-effect, the following modified stress values may be used. Both stresses σ_x^* and σ_y^* are to be compressive stress in order to apply stress reduction according to the following formulae:

$$\sigma_x = (\sigma_x^* - 0.3\sigma_y^*)/0.91$$
$$\sigma_y = (\sigma_y^* - 0.3\sigma_x^*)/0.91$$

where:

σ_x^*, σ_y^* = Stresses containing the Poisson-effect. These values are to comply with the following formulae:

$\sigma_y = 0$ and $\sigma_x = \sigma_x^*$ for $\sigma_y^* < 0.3\sigma_x^*$

$\sigma_x = 0$ and $\sigma_y = \sigma_y^*$ for $\sigma_x^* < 0.3\sigma_y^*$

where:

τ = Shear stress in x-y plane, in N/mm^2

σ_F = Minimum yield stress of the material, in N/mm^2

Compressive and shear stresses are to be taken as positive values and tension stresses are to be taken as negative values.

C_{sf} = Safety factor taken as equal to:

= 1.25 for hatch covers when subjected to design vertical wave loads according to 17.2.4(a)

= 1.10 for hatch covers when subjected to loads according to 17.2.4(b) to (e)

F_1 = Correction factor for the boundary condition of stiffeners on the longer side of elementary plate panels according to Table II 17-6

e_1, e_2, e_3 and B = Coefficient obtained from Table II 17-7

κ_x, κ_y and κ_τ = Reduction factor obtained from Table II 17-8. However, these values are to comply with the following formulae:

κ_x = 1.0 for $\sigma_x \leq 0$ (tensile stress)

κ_y = 1.0 for $\sigma_y \leq 0$ (tensile stress)

a = Length, in mm, of the longer side of the partial plate field (x-direction)

b = Length, in mm, of the shorter side of the partial plate field (y-direction)

n = Number of the elementary plate panel breadths within the partial or total plate panel (see Fig. II 17-4)

α = Aspect ratio of a single plate field obtained from the following formula:

$$\alpha = \frac{a}{b}$$

λ = Reference degree of slenderness, taken as equal to:

$$\lambda = \sqrt{\frac{\sigma_F}{K\sigma_e}}$$

K = Buckling factor according to Table II 17-8

σ_e = Reference stress, in N/mm^2, taken as equal to:

$$\sigma_e = 0.9E\left(\frac{t}{b}\right)^2$$

E = Modulus of elasticity, in N/mm^2 of the material, taken as equal to:

= 2.06×10^5

t = Net thickness, in mm, of plate under consideration

Ψ = Edge stress ratio taken as equal to:

$$\Psi = \frac{\sigma_2}{\sigma_1}$$

σ_1 = Maximum compressive stress, in N/mm^2

σ_2 = Minimum compressive stress or tension stress, in N/mm^2

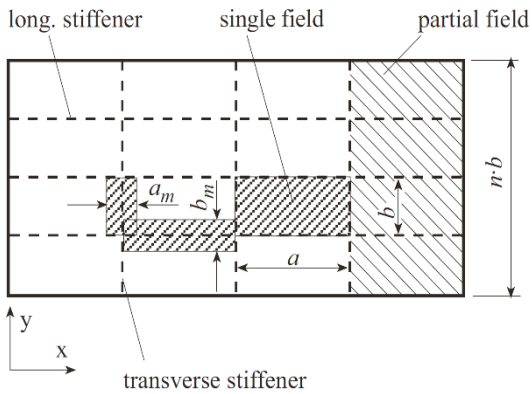

longitudinal : stiffener in the direction of the length a
transverse : stiffener in the direction of the breath b

Fig. II 17-4
General Arrangement of Panels

(ii) The buckling strength of non-stiffened webs and the flanges of primary supporting members are to be according to the requirement of (i) above.

(iii) The buckling strength of partial and total fields included in the structural members of steel hatch covers is to comply with the following (1) to (5):

(1) The buckling strength of longitudinal and transverse secondary stiffeners is to comply with following (4) and (5). For U-type stiffeners, however, the requirements in (5) below may be omitted.

(2) When buckling calculation is carried out according to (4) and (5), the effective breadth of steel hatch cover plating may be in accordance with following a) and b):

a) The effective breadth a_m or b_m of attached plating may be determined by the following formulae (see Fig. II 17-4). However, the effective breadth of plating is not to be taken greater than the value obtained from 17.2.5(e).

$b_m = \kappa_x b$ for longitudinal stiffeners
$a_m = \kappa_y a$ for transverse stiffeners

where:

κ_x, κ_y = As obtained from Table II 17-8
a , b = As specified (i) above

b) The effective breadth e'_m of the stiffened flange plates of primary supporting members may be determined according to the following i) and ii). However, a_m and b_m for flange plates are in general to determined for $\Psi = 1$.

i) Stiffening parallel to the webs of primary supporting members (see Fig. II 17-5). For $b \geq e_m$, b and a have to be exchanged.

$b < e_m$
$e'_m = nb_m$

where:

n = Integer number of stiffener spacing b inside the effective breadth e_m according to 17.2.5(e), taken as equal to:

$$n = \text{int}\left(\frac{e_m}{b}\right)$$

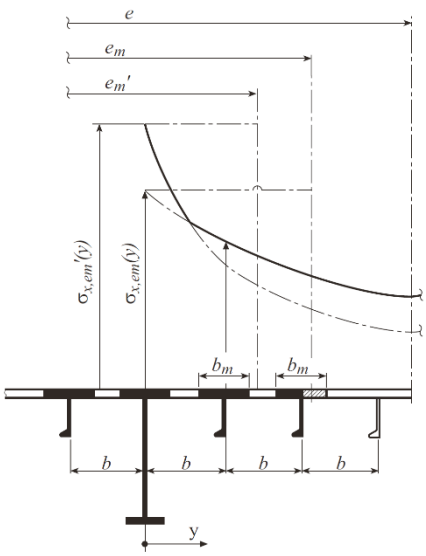

Fig. II 17-5
Stiffening Parallel to Web of Primary Supporting Member

ii) Stiffening perpendicular to the webs of primary supporting members (see Fig. II 17-6). For $a < e_m$, a and b have to be exchanged.

$a \geq e_m$
$e'_m = na_m < e_m$
$n = 2.7\frac{e_m}{a} \leq 1$

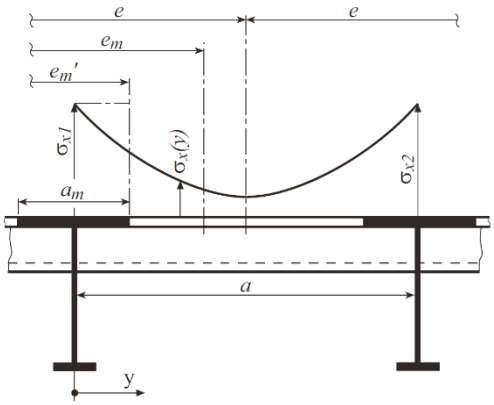

Fig. II 17-6
Stiffening Perpendicular to Web of Primary Supporting Member

(3) Stresses obtained from the calculation of the scantlings of plating and the stiffeners of steel hatch covers are to comply with the following:

a) The scantlings of plates and stiffeners are in general to be determined according to the maximum stresses $\sigma_x(y)$ at the webs of primary supporting members and stiffeners respectively.

b) For stiffeners with spacing b under compression arranged parallel to primary supporting members, no value less than $0.25\sigma_x$ is to be inserted for $\sigma_x(y = b)$.

c) The stress distribution between two primary supporting members may be obtained by the following formula:

$$\sigma_x(y) = \sigma_{x1}\left\{1 - \frac{y}{e}\left[3 + c_1 - 4c_2 - 2\frac{y}{e}(1 + c_1 - 2c_2)\right]\right\}$$

where:

c_1 = As given by the following formula:
$c_1 = \frac{\sigma_{x1}}{\sigma_{x2}}$, however $0 \le c_1 \le 1$

c_2 = As given by the following formula:
$c_2 = \frac{1.5}{e}\left(e''_{m1} + e''_{m2}\right) - 0.5$

σ_{x1} and σ_{x2} = Normal stresses in the flange plates of adjacent primary supporting members 1 and 2 with spacing e, based on cross-sectional properties considering the effective breadth or effective width, as appropriate

e''_{m1} = Proportionate effective breadth e_{m1} or proportionate effective width e'_{m1} of primary supporting member 1 within the distance e, as appropriate

e''_{m2} = Proportionate effective breadth e_{m2} or proportionate effective width e'_{m2} of primary supporting member 2 within the distance e, as appropriate

d) The shear stress distribution in flange plates may be assumed to be linear.

(4) For lateral buckling, longitudinal and transverse stiffeners are to comply with following a) to c):

a) Secondary stiffeners subject to lateral loads are to comply with the following criteria:

$$\frac{\sigma_a + \sigma_b}{\sigma_F} C_{sf} \le 1$$

where:

σ_a = Uniformly distributed compressive stress, in N/mm^2, in the direction of the stiffener axis, given by the following formula:
$\sigma_a = \sigma_x$ for longitudinal stiffeners
$\sigma_a = \sigma_y$ for transverse stiffeners

σ_b = Bending stress, in N/mm^2, in the stiffeners, given by the following formula:
$\sigma_b = \frac{M_0 + M_1}{Z_{st}10^3}$ with $\sigma_x = \sigma_n$ and $\tau = \tau_{SF}$

M_0 = Bending moment, in N-mm, due to deformation w of stiffener, given by the following formula:

$$M_0 = F_{Ki}\frac{p_z w}{c_f - p_z} \text{ with } (c_f - p_z) > 0$$

M_1 = Bending moment, in N-mm, due to lateral load P given by the following formula:

$$M_1 = \frac{pba^2}{24 \cdot 10^3} \quad \text{for longitudinal stiffeners}$$

$$M_1 = \frac{p(nb)^2}{8c_S 10^3} \quad \text{for transverse stiffeners}$$

Where n is to be taken as equal to 1 for ordinary transverse stiffeners

Z_{st} = Section modulus of stiffener, in cm^3, including the effective breadth of plating according to 17.2.5(f)(iii)

c_s = Factor accounting for the boundary conditions of the transverse stiffener taken as equal to:

= 1.0 for a stiffener that is simply supported stiffener

= 2.0 for a stiffener that is partially constrained

P = Lateral load, in N/mm^2, as specified in 17.2.4 according to the condition under consideration

F_{Ki} = Ideal buckling force, in N, of the stiffener given by the following formula:

= $F_{Kix} = \frac{\pi^2}{a^2} EI_x 10^4$ for longitudinal stiffeners

= $F_{Kiy} = \frac{\pi^2}{(nb)^2} EI_y 10^4$ for transverse stiffeners

I_x, I_y = Net moments of inertia, in cm^4, of the longitudinal or transverse stiffener, including the effective breadth of attached plating according to 17.2.5(f)(iii). I_x and I_y, are to comply with the following criteria:

$$I_x \geq \frac{bt^3}{12 \cdot 10^4}$$

$$I_y \geq \frac{at^3}{12 \cdot 10^4}$$

p_z = Nominal lateral load, in N/mm^2, of the stiffener due to σ_x, σ_y and τ

$$p_{zx} = \frac{t_a}{b}\left[\sigma_{x1}\left(\frac{\pi b}{a}\right)^2 + 2c_y\sigma_y + \tau_1\sqrt{2}\right] \quad \text{for longitudinal stiffeners}$$

$$p_{zy} = \frac{t_a}{b}\left[2c_x\sigma_{x1} + \sigma_y\left(\frac{\pi a}{nb}\right)^2\left(1 + \frac{A_y}{at_a}\right) + \tau_1\sqrt{2}\right] \quad \text{for transverse stiffeners}$$

t_a = Net thickness, in mm, of attached plate

c_x and c_y = Factor taking into account the stresses vertical to the stiffener's axis and distributed variable along the stiffener's length taken as equal to:

= $0.5(1 + \Psi)$ for $0 \leq \Psi \leq 1$

= $\frac{0.5}{1 - \Psi}$ for $\Psi < 0$

A_x and A_y = Net sectional area, in mm^2, of the longitudinal or transverse stiffener respectively without attached plating

$$\sigma_{x1} = \sigma_x\left(1 + \frac{A_x}{bt_a}\right)$$

$$\tau_1 = \left[\tau - t\sqrt{\sigma_F E\left(\frac{m_1}{a^2} + \frac{m_2}{b_2}\right)}\right] \geq 0$$

m_1 and m_2 = Coefficient given by the following formulae:

For longitudinal stiffeners:

$$m_1 = 1.47 \;\; m_2 = 0.49 \quad \text{for } \frac{a}{b} \geq 2.0$$

$$m_1 = 1.96 \;\; m_2 = 0.37 \quad \text{for } \frac{a}{b} < 2.0$$

For transverse stiffeners:

$$m_1 = 0.37 \;\; m_2 = \frac{1.96}{n^2} \quad \text{for } \frac{a}{nb} \geq 0.5$$

$$m_1 = 0.49 \;\; m_2 = \frac{1.47}{n^2} \quad \text{for } \frac{a}{nb} < 0.5$$

w = $w_0 + w_1$

w_0 = Assumed imperfection, in mm, taken as equal to:

$$w_0 = \min\left(\frac{a}{250}, \frac{b}{250}, 10\right) \quad \text{for longitudinal stiffeners}$$

$$w_0 = \min\left(\frac{a}{250}, \frac{nb}{250}, 10\right) \quad \text{for transverse stiffeners}$$

For stiffeners sniped at both ends w_0 is not to be taken as less than the distance from the mid-point of attached plating to the neutral axis of the stiffener calculated with the effective width of its attached plating

w_1 = Deformation of stiffener, in mm, at the mid-point of stiffener span due to lateral load P. In the case of uniformly distributed loads, the following values for w_1 may be used:

$$w_1 = \frac{Pba^4}{384 \cdot 10^7 EI_x} \quad \text{for longitudinal stiffeners}$$

$$w_1 = \frac{5Pa(nb)^4}{384 \cdot 10^7 EI_y c_s^2} \quad \text{for transverse stiffeners}$$

c_f = Elastic support, in N/mm^2, provided by the stiffener taken as equal to:

For longitudinal stiffeners:

$$c_f = F_{Kix} \frac{\pi^2}{a^2} \left(1 + c_{px}\right)$$

$$c_{px} = \frac{1}{1 + \frac{0.91\left(\frac{12 \cdot 10^4 I_x}{t^3 b} - 1\right)}{c_{xa}}}$$

c_{xa} = Coefficient taken as equal to:

$$c_{xa} = \left(\frac{a}{2b} + \frac{2b}{a}\right)^2 \quad \text{for } a \geq 2b$$

$$c_{xa} = \left[1 + \left(\frac{a}{2b}\right)^2\right]^2 \quad \text{for } a < 2b$$

For transverse stiffeners:

$$c_f = c_s F_{Kiy} \frac{\pi^2}{(n \cdot b)^2} \left(1 + c_{py}\right)$$

$$c_{py} = \frac{1}{1 + \frac{0.91\left(\frac{12 \cdot 10^4 I_y}{t^3 b} - 1\right)}{c_{ya}}}$$

c_{ya} = Coefficient taken as equal to:

$$c_{ya} = \left(\frac{nb}{2a} + \frac{2a}{nb}\right)^2 \quad \text{for } nb \geq 2a$$

$$c_{ya} = \left[1 + \left(\frac{nb}{2a}\right)^2\right]^2 \quad \text{for } nb < 2a$$

b) For stiffeners not subject to lateral loads, the bending moment σ_b is to be calculated at the mid-point of the stiffener.

c) When lateral loads are acting, stress calculations are to be carried out for both fibers of the stiffener's cross sectional area (if necessary for the biaxial stress field at the plating side).

(5) For torsional buckling, longitudinal and transverse stiffeners are to comply with the following a) and b):

a) Longitudinal stiffeners are to comply with the following criteria:

$$\frac{\sigma_x}{\kappa_T \sigma_F} C_{sf} \leq 1.0$$

where:

κ_T = Coefficient taken as equal to:

$\kappa_T = 1.0$ for $\lambda_T \leq 0.2$

$$\kappa_T = \frac{1}{\Phi + \sqrt{\Phi^2 - \lambda_T^2}} \quad \text{for } \lambda_T > 0.2$$

$$\Phi = 0.5[1 + 0.21(\lambda_T - 0.2) + \lambda_T^2]$$

λ_T = Reference degree of slenderness taken as equal to:

$$\lambda_T = \sqrt{\frac{\sigma_F}{\sigma_{KiT}}}$$

$$\sigma_{KiT} = \frac{E}{I_p}\left(\frac{\pi^2 I_\omega 10^2}{a^2}\varepsilon + 0.385 I_T\right) \quad N/mm^2$$

I_P = Net polar moment of inertia of the stiffener, in cm^4, defined in Table II 17-9, and related to point C as shown in Fig. II 17-7

I_T = Net St. Venant's moment of inertia of the stiffener, in cm^4, defined in Table II 17-9

I_ω = Net sectorial moment of inertia of the stiffener, in cm^6, defined in Table II 17-9, related to point C as shown in Fig. II 17-7

ε = Degree of fixation taken as equal to:

$$\varepsilon = 1 + 10^{-3}\sqrt{\frac{a^4}{\frac{3}{4}\pi^4 I_w\left(\frac{b}{t^3} + \frac{4h_w}{3t_w^3}\right)}}$$

A_w = Net web area, in mm^2, equal to:
$A_w = h_w t_w$

A_f = Net flange area, in mm^2, equal to:
$A_f = b_f t_f$

$$e_f = h_w + \frac{t_f}{2} \quad mm$$

h_w, t_w, b_f and t_f = Dimensions of stiffener, in mm, as specified in Fig. II 17-7

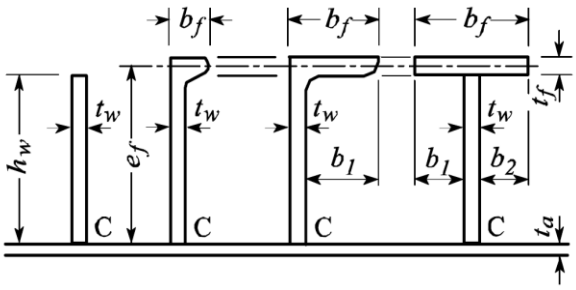

Fig. II 17-7
Dimensions of Stiffener

b) For transverse secondary stiffeners loaded by compressive stress which are not supported by longitudinal stiffeners, sufficient torsional buckling strength is to be performed analogously in accordance with a) above.

17.2.6 Additional Requirements for Steel Hatch Covers Carrying Cargoes

(a) Where concentrated loads, e.g. container loads, are acting on steel hatch covers, direct calculations deemed appropriate by the Society are required.

(b) The scantlings of sub structures subject to concentrated loads acting on steel hatch covers are to be determined taking into consideration the design cargo loads and permissible stresses specified in this section.

(c) The scantlings of top plates and stiffeners of steel hatch covers subject to wheel loads are determined by direct calculation or any other method which deemed appropriate by the Society.

17.2.7 Portable Beams, Hatchway Covers, Steel Pontoon Covers and Steel Weathertight Covers

(a) Portable beams are to comply with the following (i) to (vii):

(i) The carriers and sockets for portable beams are to be of substantial construction, having a minimum bearing surface of 75 mm, and are to be provided with means for the efficient fitting and securing of the beams.

(ii) Coamings are to be stiffened in way of carriers and sockets by providing stiffeners from these fittings to the deck or by equivalent strengthening.

(iii) Where beams of a sliding type are used, the arrangement is to ensure that the beams remain properly in position when the hatchway is closed.

(iv) The depth of portable beams and the width of their face plates are to be suitable to ensure the lateral stability of the beams. The depth of beams at their ends is not to be less than 0.40 times the depth at their mid-point or 150 mm, whichever is greater.

(v) The upper face plates of portable beams are to extend to the ends of the beams. The web plates are to be increased in thickness to at least twice that at the mid-point for at least 180 mm from each end or to be reinforced with doubling plates.

(vi) Portable beams are to be provided with suitable gear for releasing them from slings without the need for personnel to get on the beam.

(vii) Portable beams are to be clearly marked to indicate the deck, hatchway and position to which they belong.

(b) Hatchway covers are to comply with the following (i) to (v):

(i) Hatch rests are to be provided with at least a 65 mm bearing surface and are to be beveled, if required, to suit the slope of the hatchways.

(ii) Hatchway covers are to be provided with suitable hand grips according to their weight and size, except where such grips are unnecessary due to the cover's construction.

(iii) Hatchway covers are to be clearly marked to indicate the deck, hatchway and position to which they belong.

(iv) The wood for hatchway covers is to be of good quality, straight grained and reasonably free from knots, sap and shakes.

(v) The ends of all wood covers are to be protected by an encircling steel band.

(c) Steel pontoon covers are to comply with the following (i) to (iii):

(i) The depth of steel pontoon covers at the supports is not to be less than one-third the depth at the mid-point or 150 mm, whichever is greater.

(ii) The width of the bearing surfaces for steel pontoon covers is not to be less than 75 mm.

(iii) Steel pontoon covers are to be clearly marked to indicate the deck, hatchway and position to which they belong.

(d) Steel weathertight covers are to comply with the following:

(i) The depth of steel weathertight covers at the supports is not to be less than 1/3 the depth at the mid-point or 150 mm, whichever is greater.

17.2.8 Tarpaulins and Securing Arrangements for Hatchways Closed by Portable Covers

(a) At least two layers of tarpaulins are to be provided for each exposed hatchway on the freeboard or superstructure decks and at least one layer of such a tarpaulin is to be provided for each exposed hatchway elsewhere.

(b) Battens are to be efficient for securing the tarpaulins and not to be less than 65 mm in width and 9 mm in thickness.

(c) Wedges are to be of tough wood or other equivalent materials. They are to have a taper not more than 1/6 and not to be less than 13 mm in thickness at the point.

(d) Cleats are to be set to fit the taper of the wedges. They are to be at least 65 mm wide and to be spaced not more than 600 mm from centre to centre; the cleats along each side are to be arranged not more than 150 mm apart from the hatch corners.

(e) For all hatchways in exposed freeboard and superstructure decks, steel bars or other equivalent means are to be provided in order to efficiently secure each section of the hatchway cover after the tarpaulins are battened down. Hatchway covers of more than 1.5 meters in length are to be secured by at least two such securing appliances. At all other hatchways in exposed positions on weather decks, ring bolts or other suitable fittings for lashing are to be provided.

17.2.9 Hatch Coaming Strength Criteria

(a) Height of coamings is to comply with following (i) to (iii):

(i) Height of coamings above the upper surface of the deck is to be at least 600 mm in Position 1 and 450 mm in Position 2.

(ii) For hatchways closed by weathertight steel hatch covers, the height of coamings may be reduced from that prescribed in (i) or omitted entirely subject to the satisfaction of the Society.

(iii) The height of hatchway coamings other than those provided in exposed portions of the freeboard or superstructure decks is to be to the satisfaction of the Society having regard to the position of hatchways or the degree of protection provided.

(b) Scantlings of hatch coamings are to be in accordance with the followings.

(i) The local net plate thickness, in mm, of the hatch coaming plating $t_{coam,net}$, is not to be less than that obtained from following formula:

$$t_{coam,net} = 14.2S\sqrt{\frac{P_H}{\sigma_{a,coam}}}, \text{but not to be less than } 6 + \frac{L'}{100}$$

where:

S	=	Secondary stiffener spacing, in m
P_H	=	As specified in 17.2.4(b)
$\sigma_{a,coam}$	=	$0.95\sigma_F$
σ_F	=	Minimum upper yield stress or proof stress of the material, in N/mm^2.
L'	=	Length of ship L, in m. However, where L' exceeds 300 m, L' is to be taken as 300 m.

(ii) Where the hatch coaming secondary stiffener is snipped at both ends, the gross thickness $t_{coam,gross}$, in mm, of the coaming plate at the sniped stiffener end is not to be less than that obtained from the following formula:

$$t_{coam,gross} = 19.6\sqrt{\frac{P_H S(l - 0.5S)}{\sigma_F}}$$

where:

l	=	secondary stiffener span, in m, to be taken as the spacing of coaming stays
S, P_H and σ_F	=	As specified in (i) above

(iii) The net section modulus Z_{net}, in cm^3, and net shear area, in cm^2, of hatch coaming secondary stiffeners are not to be less than that obtained from the following formula. For snipped stiffeners at coaming corners, section modulus and shear area at the fixed support are to be increased by 35%.

$$Z_{net} = \frac{83Sl^2P_H}{\sigma_F}$$

$$A_{net} = \frac{10SlP_H}{\sigma_F}$$

where:

S, P_H and σ_F = As specified in (ii) above

(iv) Buckling strength assessment of hatch coaming is to be carried out by the method as deemed appropriate by the Society.

(v) The net scantlings of hatch coaming stays are to be in accordance with following (1) to (3):

(1) For hatch coaming stays considered to be simple beams (see Examples a. and b. of Fig. II 17-8 of this Chapter), the net section modulus Z_{net} (cm^3) of such stays at their deck connections and the net scantling t_{net} (mm) of their webs are not to be less than that obtained from following formulae:

$$Z_{net} = \frac{526 H_C^2 S P_H}{\sigma_F}$$

$$t_{w,net} = \frac{2 H_C S P_H}{\sigma_F h}$$

where:

H_C = Hatch coaming stay height, in m
h = Hatch coaming stay depth, in m
S = Hatch coaming stay spacing, in m
σ_F and P_H = As specified in (i) above

(2) For coaming stays other than those in (1) above (see Examples c. and d. of Fig. II 17-8 of this Chapter), stresses are generally to be determined through grillage analysis or FEM, and the calculated stresses are to satisfy the permissible stress criteria of 17.2.5(a) of this Chapter.

(3) For calculating the net section modulus of coaming stays, the area of their face plates is to be taken into account only when it is welded with full penetration welds to the deck plating and an adequate underdeck structure is fitted to support the stresses transmitted by them.

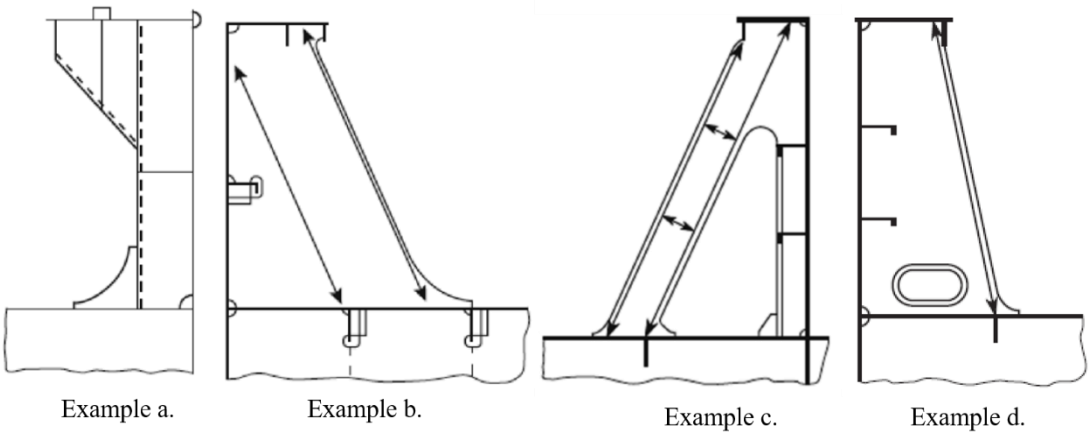

Fig. II 17-8
Examples of Coaming Stays

(c) The coamings for hatchways in Position 1 or coamings of 760 mm or more in height for hatchways in Position 2 are to be stiffened in a suitable position below the upper edge by a horizontal stiffener; the breadth of the horizontal stiffener is not to be less than 180 mm.

(d) Coamings are to be additionally supported by efficient brackets or stays provided from the horizontal stiffeners specified in (c) to the deck at intervals of approximately 3 meters.

(e) Coaming plates are to extend to the lower edge of the deck beams; moreover, they are to be flanged or fitted with face bars or half-round bars (see Fig. II 17-9 of this Part), except where specially approved by the Society.

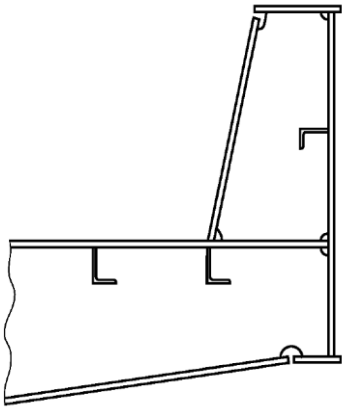

Fig. II 17-9
Example for the Extension of Coaming Plates

(f) Hatch coamings and hatch coaming stays are to comply with the following requirements:

(i) The local details of the structures are to be designed so as to transfer pressures on the hatch covers to the hatch coamings and, through them, to the deck structures below. Hatch coamings and supporting structures are to be adequately stiffened to accommodate the loading from hatch covers, in longitudinal, transverse and vertical directions.

(ii) Underdeck structures are to be checked against the load transmitted by the stays.

(iii) Double continuous welding is to be adopted for the connections of stay webs with deck plating and the weld throat is to be not less than $0.44t_{w,gross}$, where $t_{w,gross}$ is the gross thickness of the stay web.

(iv) The toes of stay webs are to be connected to deck plating with deep penetration double bevel welds extending over a distance not less than 15% of the stay width.

(v) On ships carrying cargoes such as timber, coal or coke on deck, stays are to be spaced not more than 1.5 m apart.

(vi) Hatch coaming stays are to be supported by appropriate substructures.

(vii) For hatch coamings that transfer friction forces at hatch cover supports, special consideration is to be given to fatigue strength.

(viii) Longitudinal hatch coamings with a length exceeding $0.1L_1$ are to be provided with tapered brackets or equivalent transitions and a corresponding substructure at both ends. At the end of the brackets, they are to be connected to the deck by full penetration welds of minimum 300 mm in length.

(ix) Hatch coamings and horizontal stiffeners on hatch coamings may be considered as a part of the longitudinal hull structure when designed according to the requirements for longitudinal strength and verified in cases deemed appropriate by the Society.

(x) Unless otherwise specified, the material and welding requirements for hatch coamings are to comply with the provisions of Part XI and XII of the Rules.

17.2.10 Closing Arrangements

(a) Securing devices

(i) Securing devices between covers and coamings and at cross-joints are to ensure weathertightness.

(ii) The means for securing and maintaining weathertightness by using gaskets and securing devices are to comply with the following (1) to (6). The means for securing and maintaining weathertightness of weathertight covers are to be to the satisfaction of the Society. Arrangements are to ensure that weathertightness can be maintained in any sea condition.

(1) The weight of covers and any cargo stowed thereon are to be transmitted to the ship structure through steel to steel contact.

(2) Gaskets and compression flat bars or angles which are arranged between covers and the ship structure and cross-joint elements are to be in compliance with the following a) to c):

a) Compression bars or angles are to be well rounded where in contact with the gaskets and are to be made of corrosion-resistant materials.

b) The gaskets are to be of relatively soft elastic materials. The material is to be of a quality suitable for all environmental conditions likely to be experienced by the ship, and is to be compatible with the cargoes carried.

c) A continuous gasket is to be effectively secured to the cover. The material and form of gasket selected are to be considered in conjunction with the type of cover, the securing arrangement and the expected relative movement between the cover and ship structure.

(3) Securing devices attached to hatchway coamings, decks or covers are to be in compliance with the following a) to e):

a) Arrangement and spacing of securing devices are to be determined with due attention to the effectiveness for weathertightness, depending upon the type and the size of hatch cover as well as to the stiffness of the cover edges between the securing devices.

b) The gross sectional area, in cm^2, of each securing device is not to be less than that obtained from the following formula. However, rods or bolts are to have a net diameter not less than 19 mm for hatchways exceeding 5 m^2 in area.

$$A = 0.28\bar{a}p/f$$

where:

$\bar{a}$	=	Half the distance, in m, between two adjacent securing devices, measured along the hatch cover periphery (see Fig. II 17-3)
P	=	Packing line pressure, in N/mm, minimum 5 N/mm
f	=	As obtained from the following formula: $f=(\sigma_F/235)^e$
σ_F	=	Minimum upper yield stress, in N/mm^2, of the steel used for fabrication, but not to be taken greater than 70% of the ultimate tensile strength
e	=	Coefficient taken as equal to:
	=	1.0 for $\sigma_F \leq 235$ N/mm^2
	=	0.75 for $\sigma_F > 235$ N/mm^2

c) Individual securing devices on each cover are to have approximately the same stiffness characteristics.

d) Where rod cleats are fitted, resilient washers or cushions are to be incorporated.

e) Where hydraulic cleating is adopted, a positive means is to be provided to ensure that it remains mechanically locked in the closed position in the event of failure of the hydraulic system.

(4) A drainage arrangement equivalent to the standards specified in the following is to be provided.

a) Drainage is to be arranged inside the line of gaskets by means of a gutter bar or vertical extension of the hatch side and end coaming. If an application is made by the owner of a container carrier and the Society deems it to be appropriate, special consideration will be given to this requirement.

b) Drain openings are to be arranged at the ends of drain channels and are to be provided with effective means such as non-return valves or the equivalent for preventing the ingress of water from outside.

c) Cross-joints of multi-panel covers are to be arranged with a drainage channel for water from space above the gasket and a drainage channel below the gasket.

d) If a continuous outer steel contact between cover and ship structure is arranged, drainage from the space between the steel contact and the gasket is also to be provided for.

(5) It is recommended that ships with steel weathertight covers are supplied with an operation and maintenance manual which includes the following a) to e):

a) Opening and closing instructions

b) Maintenance requirements for packing, securing devices and operating items

c) Cleaning instructions for drainage systems

d) Corrosion prevention instructions

e) List of spare parts

(6) Securing devices of special design in which significant bending or shear stresses occur may be designed as anti-lifting devices according to (b) below.

(b) The securing devices of hatch covers, on which cargo is to be lashed, are to be designed for a lifting force resulting from the loads according to 17.2.4(d) of this Chapter (see Fig. II 17-10 of this Chapter). Unsymmetrical loading, which may occur in practice, is to be considered. Under such loading, the equivalent stress, in N/mm^2, in securing devices is not to be greater than that obtained from the following formula. Anti-lifting devices may be dispensed with at the discretion of the Society.

$$\sigma_E = \frac{150}{k_l}$$

where:

k_l = As obtained from the following formula:

$$k_l = \left(\frac{235}{\sigma_F}\right)^e$$

σ_F = Minimum upper yield stress or proof stress of the material, in N/mm^2

e = As given below:

= 0.75 for $\sigma_F > 235$

= 1.00 for $\sigma_F \leq 235$

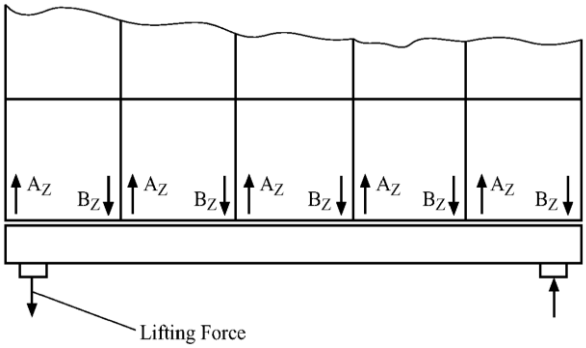

Fig. II 17-10
Lifting Forces at a Hatch Cover

17.2.11 Hatch Cover Supports, Stoppers and Supporting Structures

Hatch cover supports, stoppers and supporting structures subject to the provisions of 17.2 of this Chapter are to comply with the following (a) to (c):

(a) For the design of the securing devices for the prevention of shifting, the horizontal mass forces F obtained from the following formula are to be considered. Acceleration in the longitudinal direction, a_x, and in the transverse direction, a_y, does not need to be considered as acting simultaneously.

F = ma

where:

m = Sum of mass of cargo lashed on the hatch cover and mass of hatch cover

a = Acceleration obtained from the following formula:

= a_x=0.2g for longitudinal direction

= a_y=0.5g for transverse direction

(b) The design load for determining the scantlings of stoppers is not to be less than that obtained from 17.2.4(b) and (a), whichever is greater. Stress in the stoppers is to comply with the criteria specified in 17.2.5(a)(i).

(c) The details of hatch cover supporting structures are to be in accordance with the following (i) to (vii):

(i) The nominal surface pressure, in N/mm^2, of a hatch cover is not to be greater than that obtained from the following formula:

$p_{n\,max}=dp_n$ in general
$p_{n\,max}=3p_n$ for metallic supporting surface not subjected to relative displacements

where:

d	=	As given by the following formula. Where d exceeds 3, d is to be taken as 3.
	=	3.75-0.015L
d_{min}	=	1.0 in general
	=	2.0 for partial loading conditions
L	=	Length of ship specified in 1.2.1 of this Part.
p_n	=	As obtained from Table II 17-10

(ii) Where large relative displacements of the supporting surfaces are to be expected, the use of material having low wear and frictional properties is recommended.

(iii) Drawings of the supports are to be submitted. In these drawings, the permitted maximum pressure given by the material manufacturer related to long time stress is to be specified.

(iv) When the manufacturer of the vertical hatch cover support material can provide proof that the material is sufficient for the increased surface pressure, not only statically but under dynamic conditions, the permissible nominal surface pressure $p_{n\,max}$, as specified in (i) above, may be relaxed at the discretion of the Society. However, realistic long term distributions of spectra for vertical loads and relative horizontal motion between hatch covers and hatch cover stoppers are to be as deemed appropriate by the Society.

(v) Irrespective of the arrangement of stoppers, the supports are to be able to transmit the following force p_h in the longitudinal and transverse direction.

$$p_h = \mu \frac{p_v}{\sqrt{d}}$$

where:

p_v	=	Vertical supporting force
μ	=	Friction coefficient generally to be taken as 0.5. For non-metallic or low-friction materials, the friction coefficient may be reduced as appropriate by the Society. However, in no case μ is to be less than 0.35.

(vi) Stresses in supporting structures are to comply with the criteria specified in 17.2.5(a)(i).

(vii) For substructures and adjacent constructions of supports subjected to horizontal forces p_h, special consideration is to be given to fatigue strength.

17.2.12 Steel Hatchway Covers for Container Carriers

(a) For container carriers with unusually large freeboards, gaskets and securing devices for steel hatchway covers may be suitably dispensed with at the discretion of the Society upon request by the applicant for classification.

(b) Treatment of stowage and segregation of containers containing dangerous goods is to be at the discretion of the Society.

17.2.13 Additional Requirement for Small Hatches Fitted on Exposed Fore Deck

Small hatches located on exposed decks forward of $0.25L_1$ are to be of sufficient strength and weathertightness to resist green sea force if the height of the exposed deck in way of those hatches is less than $0.1L_1$ or 22 m above the designed maximum load line, whichever is smaller. The length L_1 is the length, in m, of ship as specified in 1.2.1 or 0.97 times the length of ship on the designed maximum load line, whichever is smaller.

17.3 Machinery Space Openings

17.3.1 Protection of Machinery Space Openings

Machinery space openings are to be enclosed by steel casings.

17.3.2 Exposed Machinery Space Casings

(a) Exposed machinery space casings are to have scantlings not less than that those required in 12.3 of this Part, taking the c-value as 1.0.

(b) The thickness of the top plating of exposed machinery space casings is not to be less than that obtained from the following formulae:

Position 1 = 6.3S + 2.5 mm
Position 2 = 6.0S + 2.5 mm

where:

S = Spacing of stiffeners, in m

17.3.3 Machinery Space Casings below Freeboard Deck or within Enclosed Spaces

The scantlings of machinery space casings below the freeboard deck or within enclosed superstructures or deckhouses are to comply with the following requirements:

(a) The thickness of the plating is to be at least 6.5 mm; where the spacing of stiffeners is greater than 760 mm, the thickness is to be increased at the rate of 0.5 mm per 100 mm excess in spacing. In accommodation spaces, the thickness of the plating may be reduced by 2 mm.

(b) The section modulus of stiffeners is not to be less than that obtained from the following formula:

$1.2Sl^3$ cm^3

where:

l = Tween deck height, in m.

S = Spacing of stiffeners, in m.

17.3.4 Access Openings to Machinery Spaces

(a) All access openings to machinery spaces are to be located in protected positions as far as possible and provided with steel doors capable of being closed and secured from both sides. Such doors in exposed machinery casings on the freeboard deck are to comply with the requirements in 12.4.2 and 12.4.3.

(b) The sills of doorways in machinery casings are not to be less than 600 mm in height above the upper surface of the deck in Position 1 and 380 mm in Position 2.

(c) In ships having a reduced freeboard, doorways in the exposed machinery casings on the freeboard or raised quarter deck are to lead to a space or passageway which is of a strength equivalent to that of the casing and is separated from the stairway to the machinery spaces by a second steel weathertight door of which the doorway sill is to be at least 230 mm in height.

17.3.5 Miscellaneous Openings in Machinery Casings

(a) Coamings of any fiddley, funnel and machinery space ventilator in an exposed position on the freeboard or superstructure deck are to be as high above the deck as reasonable and practicable.

(b) In exposed positions on the freeboard and superstructure decks, fiddley openings and all other openings in the machinery casings are to be provided with strong steel weathertight covers permanently fitted in their proper positions.

(c) Annular spaces around funnels and all other openings in the machinery casings are to be provided with a means of closing capable of being operated from outside the machinery space in case of fire.

17.3.6 Machinery Casings within Unenclosed Superstructures or Deckhouses

Machinery casings within unenclosed superstructures or deckhouses and doors provided thereon are to be constructed to the satisfaction of the Society, having regard to the degree of protection afforded by the superstructure or deckhouse.

17.4 Companionways and Other Deck Openings

17.4.1 Manholes and Flush Deck Openings

Manholes and flush deck openings in exposed positions on the freeboard and superstructure decks or within superstructures other than enclosed superstructures are to be closed by steel covers capable of being made watertight. These covers are to be secured by closely spaced bolts or to be permanently fitted.

17.4.2 Companionways

(a) Access openings in the freeboard deck are to be protected by enclosed superstructures, or by deckhouses or companionways of equivalent strength and weathertightness.

(b) Access openings in exposed superstructure decks or in the top of deckhouses on the freeboard deck which give access to a space below the freeboard deck or a space within an enclosed superstructure are to be protected by efficient deckhouses or companionways.

(c) Doorways in deckhouse or companionways such as specified in (a) and (b) are to be provided with doors complying with the requirements in 12.4.2 and 12.4.3.

(d) The sills of doorways in companionways specified in (a) to (c) are not to be less than 600 mm in height above the upper surface of the deck in Position 1 and 380 mm in Position 2.

(e) For deckhouses or superstructures which protect access openings to spaces below the freeboard deck, the height of sills of doorways on the freeboard deck are not to be less than 600 mm. However, where access is provided from the deck above as an alternative to access from the freeboard deck, the height of sills into a bridge or poop or deckhouse may be reduced to 380 mm.

(f) Where the access openings in superstructures and deckhouses which protect access openings to spaces below the freeboard deck do not have closing appliances in accordance with the requirements of 12.4.2 and 12.4.3, the openings to spaces below the freeboard deck are to be considered exposed.

17.4.3 Openings to Cargo Spaces

Access and other openings to cargo spaces are to be provided with a means of closing capable of being operated from outside the spaces in case of fire. Such closing means for any opening leading to any other space inboard the ship is to be of steel.

Table II 17-1
Corrosion Additions

Type of ship	Type of structural member		Corrosion addition t_c ,in mm
Container carriers and car carriers	Steel hatch covers		1.0
	Hatchway coamings		1.5
Ships other than those specified above and subject to the application of this section	Single plating type hatch cover		2.0
	Double plating type hatch cover	Top, side and bottom plating	1.5
		Internal structures	1.0
	Hatchway coamings, hatch coaming stays and stiffeners		1.5

Table II 17-2
Design Vertical Wave Load P_V[(1), (2)] (kN/m²)

		$L_f \leq 100m$	$L_f > 100m$
Position 1	For $0.25L_f$ forward	$\frac{9.81}{76}\left[(4.28L_f + 28)\frac{x}{L_f} - 1.71L_f + 95\right]$[(3)]	For type B ships according to ICLL[(4)]: $9.81\left[(0.0296L'_f + 3.04)\frac{x}{L_f} - 0.0222L'_f + 1.22\right]$ For type B-60 and B-100 ships according to ICLL[(4)]: $9.81\left[(0.1452L'_f - 8.52)\frac{x}{L_f} - 0.1089L'_f + 9.89\right]$
	Elsewhere	$\frac{9.81}{76}(1.5L_f + 116)$	9.81×3.5
Position 2		$\frac{9.81}{76}(1.1L_f + 87.6)$	9.81×2.6[(5)]

Notes:

(1) L_f : Length of ship for freeboard defined in 1.2.10 of this Part, in m
L'_f: L_f, in m, however, where L_f exceeds 340 m, L'_f is to be taken as 340 m
x : Distance, in m, of the mid length of the hatch cover under examination from the aft end of L_f

(2) For exposed hatchways in positions other than Position 1 or 2, the value of each design wave load will be specially considered.

(3) Where a Position 1 hatchway is located at least one superstructure standard height higher than the freeboard deck, P_V may be taken as $\frac{9.81}{76}(1.5L_f + 116)$ kN/m².

(4) Where a Position 1 hatchway is located at least one superstructure standard height higher than the freeboard deck, P_V may be taken as 9.81×3.5 kN/m².

(5) Where a Position 1 hatchway is located at least one superstructure standard height higher than the Position 2 deck, P_V may be taken as 9.81×2.1 kN/m².

Table II 17-3
Minimum Value of P_H , in kN/m²

	Unprotected front coamings and hatch cover skirt plates	others
$L \leq 250$	$25 + \frac{L_1}{10}$	$12.5 + \frac{L_1}{20}$
$L > 250$	50	25

Table II 17-4
Coefficient k_1 and k_2

k_1	$1 + \frac{3.2\alpha - \gamma - 0.8}{7\gamma + 0.4}$	k_1 is not to be taken as less than 1.0 $\alpha = \frac{l_1}{l}$ $\beta = \frac{I_1}{I_0}$ $\gamma = \frac{Z_1}{Z_0}$
k_2	$1 + 8\alpha^3 \frac{1 - \beta}{0.2 + 3\sqrt{\beta}}$	

l = Overall length of portable beam, in m

l_1= Distance from the end of parallel part to the end of portable beam, in m

I_0= Moment of inertia at mid-span, in cm^4

I_1= Moment of inertia at ends, in cm^4

Z_0= Section modulus at mid-span, in cm^3

Z_1= Section modulus at ends, in cm^3

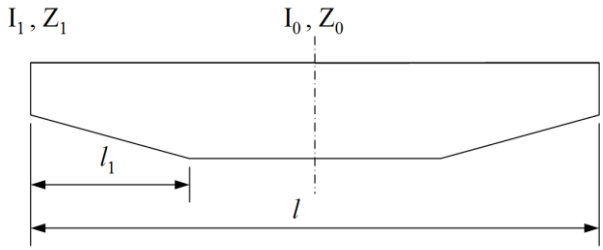

Table II 17-5
Effective Breadth e_m of Plating of Primary Supporting Members

l/e	0	1	2	3	4	5	6	7	≥ 8
e_{m1}/e	0	0.36	0.64	0.82	0.91	0.96	0.98	1.00	1.00
e_{m2}/e	0	0.20	0.37	0.52	0.65	0.75	0.84	0.89	0.90

Notes:

e_{m1} = Effective breadth, in mm, to be applied where primary supporting members are loaded by uniformly distributed loads or by not less than 6 equally spaced single loads

e_{m2} = Effective breadth, in mm, to be applied where primary supporting members are loaded by 3 or less single loads

l = Length between zero-points of bending moment curve taken equal to:
For simply supported primary supporting members: l_0
For primary supporting members with both ends constant: $0.6l_0$

l_0 = Unsupported length of the primary supporting members

e = Width of plating supported, measured from centre to centre of the adjacent unsupported fields

Table II 17-6
Correction Factor F_1

Boundary condition	F_1(2)	Edge stiffener
Stiffeners sniped at both ends	1.00	
Guidance value(1) where both ends are effectively connected to adjacent structures	1.05	Flat bars
	1.10	Bulb sections
	1.20	Angles and tee-sections
	1.30	U-type sections(3) and girders of high rigidity

Notes:

(1) Exact values may be determined by direct calculations

(2) An average value of F_1 is to be used for plate panels having different edge stiffeners

(3) A higher value may be taken if it is verified by a buckling strength check of the partial plate field using non-linear FEA and deemed appropriate by the Society. However,such values are not to be greater than 2.0

Table II 17-7
Coefficient e_1, e_2, e_3 and B

Exponents e_1, e_2, e_3 and B		Plate panel
e_1		$1+\kappa_x^4$
e_2		$1+\kappa_y^4$
e_3		$1+\kappa_x\kappa_y\kappa_\tau^2$
B	For σ_x and σ_y positive (compressive stress)	$(\kappa_x\kappa_y)^5$
	For σ_x and σ_y negative (tension stress)	1

Table II 17-8
Buckling and Reduction Factors for Plane Elementary Plate Panels

Load case	Edge stress ratio Ψ	Aspect ratio $\alpha = \frac{a}{b}$	Buckling factor K	Reduction factor κ
1 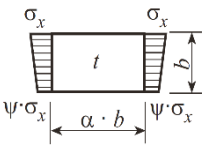	$1 \geq \Psi \geq 0$	$\alpha \geq 1$	$K = \frac{8.4}{\Psi + 1.1}$	$\kappa_x = 1$ for $\lambda \leq \lambda_c$ $\kappa_x = c\left(\frac{1}{\lambda} - \frac{0.22}{\lambda^2}\right)$ for $\lambda > \lambda_c$ $c = (1.25 - 0.12\Psi) \leq 1.25$ $\lambda_c = \frac{c}{2}\left(1 + \sqrt{1 - \frac{0.88}{c}}\right)$
	$0 > \Psi > -1$		$K = 7.63 - \Psi(6.26 - 10\Psi)$	
	$\Psi \leq -1$		$K = 5.975(1 - \Psi)^2$	
2 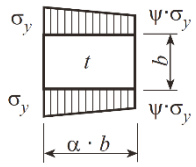	$1 \geq \Psi \geq 0$	$\alpha \geq 1$	$K = F_1\left(1 + \frac{1}{\alpha^2}\right)^2 \frac{2.1}{\Psi + 1.1}$	$\kappa_y = c\left[\frac{1}{\lambda} - \frac{R + F^2(H - R)}{\lambda^2}\right]$ $c = (1.25 - 0.12\Psi) \leq 1.25$ $R = \lambda\left(1 - \frac{\lambda}{c}\right)$ for $\lambda < \lambda_c$ $R = 0.22$ for $\lambda \geq \lambda_c$ $\lambda_c = \frac{c}{2}\left(1 + \sqrt{1 - \frac{0.88}{c}}\right)$ $F = \left(1 - \frac{\frac{K}{0.91} - 1}{\lambda_p^2}\right) c_1 \geq 0$ $\lambda_p^2 = \lambda^2 - 0.5$ for $1 \leq \lambda_p^2 \leq 3$ $c_1 = \left(1 - \frac{F_1}{\alpha}\right) \geq 0$ $H = \lambda - \frac{2\lambda}{c\left(T + \sqrt{T^2 - 4}\right)} \geq R$ $T = \lambda + \frac{14}{15\lambda} + \frac{1}{3}$
	$0 > \Psi > -1$	$1 \leq \alpha \leq 1.5$	$K = F_1\left[\left(1 + \frac{1}{\alpha^2}\right)^2 \times \frac{2.1(1 + \Psi)}{1.1} - \frac{\Psi}{\alpha^2}(13.9 - 10\Psi)\right]$	
		$\alpha > 1.5$	$K = F_1\left[\left(1 + \frac{1}{\alpha^2}\right)^2 \times \frac{2.1(1 + \Psi)}{1.1} - \frac{\Psi}{\alpha^2}\left(5.87 + 1.87\alpha^2 + \frac{8.6}{\alpha^2} - 10\Psi\right)\right]$	
	$\Psi \leq -1$	$1 \leq \alpha \leq \frac{3(1 - \Psi)}{4}$	$K = 5.975F_1\left(\frac{1 - \Psi}{\alpha}\right)^2$	
		$\alpha > \frac{3(1 - \Psi)}{4}$	$K = F_1\left[3.9675\left(\frac{1 - \Psi}{\alpha}\right)^2 + 0.5375\left(\frac{1 - \Psi}{\alpha}\right)^4 + 1.87\right]$	

Table II 17-8
Buckling and Reduction Factors for Plane Elementary Plate Panels (cont.)

Load case	Edge stress ratio Ψ	Aspect ratio $\alpha = \frac{a}{b}$	Buckling factor K	Reduction factor κ
3 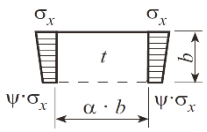	$1 \geq \Psi \geq 0$	$\alpha > 0$	$K = \frac{4\left(0.425 + \frac{1}{\alpha^2}\right)}{3\Psi + 1}$	$\kappa_x = 1$ for $\lambda \leq 0.7$ $\kappa_x = \frac{1}{\lambda^2 + 0.51}$ for $\lambda > 0.7$
	$0 > \Psi > -1$		$K = 4\left(0.425 + \frac{1}{\alpha^2}\right)(1 + \Psi) - 5\Psi(1 - 3.42\Psi)$	
4 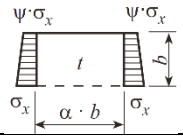	$1 > \Psi > -1$	$\alpha > 0$	$K = \left(0.425 + \frac{1}{\alpha^2}\right)\frac{3 - \Psi}{2}$	
5 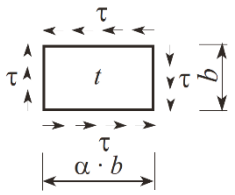	Nil		$K = K_\tau\sqrt{3}$	$\kappa_\tau = 1$ for $\lambda \leq 0.84$ $\kappa_\tau = \frac{0.84}{\lambda}$ for $\lambda > 0.84$
		$\alpha \geq 1$	$K_\tau = \left(5.34 + \frac{4}{\alpha^2}\right)$	
		$0 < \alpha < 1$	$K_\tau = \left(4 + \frac{5.34}{\alpha^2}\right)$	
Boundary condition	- - - - - plate edge free ——— plate edge simple support			

Table II 17-9
Moments of Inertia

Section	I_P, in cm^4	I_T, in cm^4	I_ω, in cm^6
Flat bar	$\frac{h_w^3 t_w}{3 \cdot 10^4}$	$\frac{h_w t_w^3}{3 \cdot 10^4}\left(1 - 0.63\frac{t_w}{h_w}\right)$	$\frac{h_w^3 t_w^3}{36 \cdot 10^6}$
Bulb, angle or tee sections	$\left(\frac{A_w h_w^2}{3} + A_f e_f^2\right)10^{-4}$	$\frac{h_w t_w^3}{3 \cdot 10^4}\left(1 - 0.63\frac{t_w}{h_w}\right) + \frac{b_f t_f^3}{3 \cdot 10^4}\left(1 - 0.63\frac{t_f}{b_f}\right)$	For bulb and angle sections: $\frac{A_f e_f^2 b_f^2}{12 \cdot 10^6}\left(\frac{A_f + 2.6A_w}{A_f + A_w}\right)$ For tee-sections: $\frac{b_f^3 t_f e_f^2}{12 \cdot 10^6}$

Table II 17-10
Permissible Nominal Surface Pressure p_n, in N/mm^2

Material	p_n , when loaded by	
	Vertical force	Horizontal force
Hull structure steel	25	40
Hardened steel	35	50
Plastic materials in steel	50	-

Chapter 18
Machinery Casings

18.1 General

18.1.1 Machinery space openings in position 1 or 2 are to be properly framed and efficiently enclosed by steel casings of ample strength, and where the casings are not protected by other structures their strength are to be specially considered. Other openings in such casings are to be fitted with equivalent covers, permanently attached in their proper positions.

18.1.2 In general, ventilators necessary to continuously supply the machinery space are to have coamings of sufficient height to comply with 21.1.6(a) of this part, without having to fit weathertight closing appliances. Ventilators necessary to continuously supply the emergency generator room, if this is considered buoyant in the stability calculation or protecting opening leading below, are to have coamings of sufficient height to comply with 21.1.6(a) of this part, without having to fit weathertight closing appliances.

18.1.3 Where due to ship size and arrangement this is not practicable, lesser heights for machinery space and emergency generator room ventilator coamings, fitted with weathertight closing appliances in accordance with 21.1.6(b) of this part, may be permitted by the Society in combination with other suitable arrangements to ensure an uninterrupted, adequate supply of ventilation to these spaces.

18.2 Construction of Casings

18.2.1 The scantlings of plating and stiffeners of exposed casings protecting machinery openings are to be obtained as for superstructure end bulkheads and deckhouse walls specified in 12.3 of this Part.

18.2.2 For casings within open superstructures, the scantlings of plating and stiffeners are to be obtained from 12.4 of this Part as for an aft end bulkhead.

18.3 Skylights and Gratings

18.3.1 Skylights

(a) Skylights are to be substantially constructed and securely connected to coamings.

(b) Effective means is to be provided for closing and securing the hinged covers.

18.3.2 Gratings over stokehold openings are to be protected by hinged steel covers or the other effective means of closing.

Chapter 19

Machinery Spaces and Tunnels

19.1 General

19.1.1 The following features in the construction and the arrangement of the machinery space are to be carefully considered:

(a) Substantial construction and suitable arrangement of necessary openings in the machinery space.

(b) Adequate support for the deck.

(c) Suitable maintenance of the stiffness of the side and the bottom.

(d) Adequate distribution of the weight of the machinery.

19.1.2 The machinery space is to be sufficiently strengthened by means of web frames, web beams, and pillars or other equivalent arrangements.

19.1.3 All parts of the machinery, shafting, etc. are to be efficiently supported and the adjacent structure is to be adequately strengthened.

19.1.4 In ships of high power and in multiple screw ships, the structural construction and the efficiency of attachments of the machinery foundation and the adjacent structure are to be specially strengthened and plans are to be submitted for approval before the bottom construction is commenced.

19.2 Engine Seatings

19.2.1 In ships having a single bottom, the following applies:

(a) The main engines are to be seated upon thick rider plates laid across the top of deep floors or heavy foundation girders efficiently bracketed and stiffened and having sufficient strength in proportion to the power and size of the engines.

(b) The main lines of bolting that hold down the main engines to the rider plates mentioned in (a) are to pass through the rider plates into the girder plates provided underneath.

(c) In ships with longitudinal girders of not excessive spacing beneath the engine which is on the centre line of the hull, the centre keelson may be omitted for the section where the engine is located.

19.2.2 In ships having a double bottom in the machinery space, the following applies:

(a) Where engines are bolted directly to the inner bottom the thickness of plating under the engine is to be twice the rule thickness.

(b) Where built-up engine seatings of ample strength and stiffness are fitted above the inner bottom, transverse brackets are to be arranged over floors and, as far as practicable, longitudinal girders are to be under that in the seating.

19.2.3 Additional full depth longitudinal girders are to be fitted under the engine and the thrust block seating.

19.2.4 Installation of engine seating

(a) The various parts of the engine seating are to be accurately faired and properly closed before welding or riveting is commenced.

(b) Vertical web plates of the engine seating are to be made a hard bearing fit, top and bottom.

19.3 Boiler Bearers

19.3.1 Boilers are to be supported by deep saddle type floors or by transverse and longitudinal girders so arranged as to effectively distribute the weight.

19.3.2 Clearances

(a) Boilers are to be kept well clear of bunker and hold bulkheads, and sufficient spaces are to be allowed for proper access all around the boiler.

(b) Boilers are to be at least 460 mm clear of the tank top, the bunker wall, etc.

(c) Where the clear space is unavoidably less than that required by 19.3.2(b) above, the thickness of the adjacent structure is to be increased, or suitable insulating arrangements are to be made.

(d) Available clearances are to be indicated on the plan submitted for approval.

(e) Hold bulkheads and decks are to be kept well clear of the boilers and uptakes, or provided with suitable insulating arrangements.

(f) Side sparrings are to be provided on the bulkheads adjacent to the boilers, keeping suitable clearance on their hold sides.

19.3.3 Floors under boiler bearer

(a) In ships having a single bottom in the boiler space, the floor under the boiler bearer is to be increased in strength in compliance with 4.1 of this Part.

(b) In ships having a double bottom in the boiler space, the floor is to be increased in strength in compliance with 5.4 and 5.5 of this Part.

19.3.4 Decks under donkey boiler and coal-fired boiler

(a) Decks under donkey boilers are to be increased 2 mm in thickness and protected under coal-fired boilers by not less than 50 mm of firebrick or cement.

(b) The requirements of 19.3.4(a) above are to be applied to any part of the deck on which the fire from the donkey boiler may be drawn.

19.4 Block and Auxiliary Foundations

19.4.1 Structure under thrust block

(a) Thrust blocks are to be bolted to efficient foundations extending well beyond thrust blocks and so arranged that the load is effectively distributed into adjacent structures.

(b) Additional intercostal girders with double attachments are to be fitted in way of block foundations as may be required.

19.4.2 Plumber blocks and auxiliary foundations are to be of substantial strength and efficiently stiffened both longitudinally and transversely.

19.5 Tunnels and Tunnel Recesses

19.5.1 Shaft Tunnels

(a) A watertight tunnel of sufficient size for examining and repairing the shafting is to be fitted in ships having machinery amidships, except in case of 19.5.1 (b) below.

(b) For ships intended to trade in sheltered waters, the watertight tunnel may be omitted provided that the shafting is otherwise protected and there is a recess at all times to the bearing and the packing gland, etc.

19.5.2 Doors and its closing appliances

(a) The watertight door is to be fitted at the fore end of the tunnel.

(b) For means of closing, and the construction of watertight doors, see 14.3 of this Part.

19.5.3 Escape trunks

(a) The escape trunk is to be provided in the tunnel at a suitable location as far as possible.

(b) The escape trunk is to be led to the bulkhead deck or above.

19.5.4 Thickness of flat side plating of tunnel

(a) The thickness of plating on flat sides of the tunnel is not to be less than that obtained from the following formula:

$2.9S\sqrt{h} + 2.5$ mm

where:

S = Spacing of stiffeners, in m.

h = Vertical distance at the mid-length of each hold from the lower edge of the side wall plating to the bulkhead deck at the centre line of the ship, in m.

(b) The lowest strakes of the plating are to be increased by 1 mm above the value required by 19.5.4(a) above.

19.5.5 Top of tunnel

(a) Where the top of the tunnel is flat,

(i) The thickness of flat plating of the top of tunnels or tunnel recesses is not to be less than that obtained from the formula in 19.5.4(a) above, h being taken as the height from the top plates to the bulkhead deck at the centre line of the ship;

(ii) Where unsheathed in way of the hatchway the top plating is to be increased by 2.5 mm;

(iii) Where the top of the tunnel or the recess forms a part of a deck, the thickness of the plating is to be increased by at least one mm above that obtained from the requirements in (i) above, but it is not to be less than that required for the deck plating at the same position;

(b) Where the top or side of the tunnel is curved,

(i) The top plating may be of the thickness required in 19.5.4(a) above with a stiffener spacing 150 mm less than that actually adopted;

(ii) The crown plating in way of the hatchway is to be increased by 2 mm unless covered with wood sheathing not less than 50 mm thick.

(iii) The wood sheathing mentioned in (ii) above is to be so secured as to keep watertightness of the tunnel where it might be damaged by cargo. Similar consideration is to be taken where apparatus such as ladder steps are provided in the tunnels.

19.5.6 Where the tunnel forms the boundary of the deep tank, the thickness of the side plating is not to be less than that required for the deep tank boundary bulkhead.

19.5.7 Where the tunnel of circular form passes through the deep tank, the thickness of the plating in way of the tank is to be not less than that given by the following formula:

$9.1 + 0.134\, d_1\, h$ mm

where:

d_1 = The diameter of tunnel, in m.

h = Greater of the vertical distances given below:

Vertical distance (m) measured from the bottom of tunnel to the mid-point between the top of tanks and the top of overflow pipes; or

0.7 times the vertical distance (m) measured from the bottom of tunnel to the point 2.0 metres above the top of overflow pipes.

19.5.8 Stiffeners on tunnel

(a) The spacing of stiffeners on the tunnel is not to exceed 915 mm.

(b) The section modulus of stiffeners is not to be less than that obtained from the following formula:

$4.0Shl^2$ cm^3

where:

l = Distance from the heel of the lower edge of the side wall to the top of the plate at side, in m.

S = Spacing of stiffeners, in m.

h = Vertical distance at mid-length of each hold from the mid-point of l to the bulkhead deck, in m.

(c) Where the ratio of the radius of the rounded tunnel top to the height of the tunnel is comparatively large, the section modulus of stiffeners is to be adequately increased over that specified in (b).

(d) The lower ends of stiffeners over 150 mm in depth are to be connected to parts such as the inner bottom plating by lug connections.

19.5.9 Additional strengthening is to be fitted under the heel of the pillar, the hatch end support or the mast stepped on the tunnel.

19.5.10 Where the top of tunnels or tunnel recesses forms part of the deck; beams, pillars and girders under the top are to be of the scantlings required for similar members of bulkhead recesses.

19.5.11 The ventilator and the escape trunk fitted in the tunnel or the tunnel recess are to be made watertight up to the bulkhead deck and to have the scantling suitable for the pressure to which they may be subjected.

19.5.12 Where watertight tunnels similar to shaft tunnels are provided, they are to be of similar construction to that of the shaft tunnels.

Chapter 20
Ceiling and Sparring

20.1 Ceiling

20.1.1 Close ceiling in single bottom

(a) The close ceiling is to be laid on floors and up to the upper turn of bilges.

(b) The close ceiling is to be arranged for easy removal for inspection of the bottom.

20.1.2 Ceiling in double bottom

(a) The ceiling is to be laid over the bilge and under the hatchway.
   (i) The ceiling over bilges is to be arranged with portable sections, which are readily removable.
   (ii) The ceiling under the hatchways may be omitted provided that the thickness of the inner bottom plating in way is increased by 2 mm.

(b) The ceiling where fitted on top of inner bottom plating, is to be laid either directly on the inner bottom plating embedded in a substantial body of mixed tar and cement or other suitable covering, or on the batten not less than 13 mm in thickness, providing a clear space of at least 12.5 mm for drainage.

20.1.3 The thickness of ceilings is not to be less than 63 mm.

Where covers or fittings of manholes of the inner bottom in cargo holds project above the plating, they are to be protected by a steel coaming around each manhole and fitted with hatches of wood or steel.

20.2 Sparring

20.2.1 In ships intended to carry general cargo, the sparring is to be fitted above the bilge ceiling, if any, in all cargo spaces.

20.2.2 Dimension of sparring

(a) The thickness of the sparring is not to be less than 50 mm finished thickness.

(b) The breadth of the sparring normally is to be 150 mm.

20.2.3 The clear space between adjacent rows of sparring is not to be more than 230 mm.

20.2.4 The sparring is to be fitted in the cleat or in the portable frame for convenience of removal.

20.2.5 The sparring may be omitted in bunker spaces and in holds exclusively used for the carriage of coal or other bulk cargoes, container and similar cargoes.

20.2.6 In ships intended to carry timbers, hold frames are to be specially protected. However, where it is obvious that the ship is not engaged in the carriage of log cargoes, the protection may be modified.

Chapter 21

Ventilators, Air and Sounding Pipes

21.1 Ventilators

21.1.1 Height of ventilator coaming

(a) The minimum height of the ventilator coaming above the upper surface of the deck exposed to the weather, measured above the sheathing, if fitted, is to be as follows:

900 mm in Position 1
760 mm in Position 2

(b) The minimum height of the coaming of the patent ventilator will be specially considered.

(c) Where the ship has an unusually large freeboard or where the ventilator serves spaces within unenclosed superstructures, the height of ventilator coamings may be suitably reduced.

21.1.2 The thickness of ventilator coamings in Positions 1 and 2 specified in 17.1.2 of this Part leading to spaces below the freeboard deck or within enclosed superstructures is not to be less than that given by Line 1 in Table II 21-1 of this Chapter. Where the height of the coamings is reduced by the provisions in 21.1.1, the thickness may be suitably reduced. Where ventilators pass through superstructures other than enclosed superstructures, the thickness of ventilator coamings in the superstructures is not to be less than that given by Line 2 in Table II 21-1 of this Chapter.

Table II 21-1
Thickness of Ventilator Coamings

Thickness of coaming plate (mm)	Outside diameter of ventilator (mm)		
	80 and under	160	230 and over but less than 330
Line 1	6	8.5	8.5
Line 2	4.5	4.5	6

Notes:
(1) For intermediate values of outside diameter of ventilator, the thickness of coaming plate is to be obtained by linear interpolation.
(2) Where the outside diameter of ventilator is over 330 mm, the thickness of coaming plate is to be in accordance with the discretion of the Society.

21.1.3 The coaming is to be effectively secured to properly stiffened deck plating of the sufficient thickness.

21.1.4 The ventilator coaming which exceeds 900 mm in height and is not supported by the adjacent structure is to be specially supported.

21.1.5 In particularly exposed positions the ventilator coaming height, scantlings and/or support may be required to be suitably increased above that given above.

21.1.6 Closing appliances

(a) Strong plugs and canvas covers or efficient metal covers which can be readily and effectively secured in place are to be provided for closing openings in coamings unless the height of the coaming is greater than 4.5 m above the deck in Position 1 and 2.3 m above the deck in Position 2.

(b) In ships of not more than 100 m in length for freeboard the closing appliances are to be permanently attached. Where not so provided in other ships they are to be conveniently stowed near ventilators to which they are to be fitted.

(c) Ventilators to cargo and machinery spaces are to be provided with a means for closing the openings that is capable of being operated from outside the spaces in case of fire. Furthermore, these ventilators are to be provided with an indicator that enables confirmation whether the shutoff is open or closed from outside of the ventilator as well as suitable means of inspection for closing appliances.

(d) All ventilator openings in exposed positions on the freeboard and superstructure decks are to be provided with efficient weathertight closing appliances. Where the coaming of any ventilator extends to more than 4.5 m above the surface of the deck in Position 1 or more than 2.3 m above the surface of the deck in Position 2 specified in 17.1.2 of this Part, such closing appliances may be omitted unless required in (c) above.

21.1.7 Machinery spaces

(a) Ventilators necessary to continuously supply the machinery spaces are to have coamings of height more than 4.5 m above the deck in Position 1 and 2.3 m above the deck in Position 2, without having to fit weathertight closing appliances. Ventilators to emergency generator rooms are to be so positioned that closing appliances are not required.

(b) Where due to vessel size and arrangement this is not practicable, lesser heights for machinery space ventilator coamings may be accepted with provision of weathertight closing appliances in combination with other suitable arrangements to ensure an uninterrupted, adequate supply of ventilation to these spaces.

21.1.8 Ventilator cowls are to be fitted closely to coamings and are to have housings of not less than 380 mm, except that a smaller housing may be permitted for ventilators of not greater than 200 mm in diameter.

21.1.9 The ventilators for the deckhouses which protect the companionways leading to spaces below the freeboard deck are to be equivalent to those for the enclosed superstructures.

21.1.10 The coamings of ventilators supplying the emergency generator room is to extend to more than 4.5 m above the surface of the deck in Position 1, and more than 2.3 m above the surface of the deck in Position 2 specified in 17.1.2 of this Part. The ventilator openings are not to be fitted with weathertight closing appliances, except for those complying with IACS UR M75. However, where due to vessel size and arrangement this requirement is not practicable, the height of ventilator coamings is to be at the discretion of the Society.

21.1.11 The ventilators located on the exposed deck forward of 0.25L are to be of sufficient strength to resist green sea force if the height of the exposed deck in way of those ventilators is less than 0.1L or 22 m above the designed maximum load line, whichever is smaller. The length L is specified in 1.2.1 of this Part. This requirement does not apply to the cargo tank venting systems and inert gas systems of tankers, ships carrying liquefied gases in bulk and ships carrying dangerous chemicals in bulk.

21.2 Air and Sounding Pipes

21.2.1 Air and sounding pipes are to be fitted in accordance with the requirements of Part VI and this Chapter.

21.2.2 Height of air pipes

(a) The height of the air pipe from the upper surface of the deck exposed to the weather, measured above sheathing, if fitted, is not to be less than:

760 mm on the freeboard deck (including raised quarter deck).
450 mm on the superstructure deck.

(b) Where these heights may interfere with the working of the ship, a lower height may be approved, provided that closing arrangements are provided and other circumference justifying a lower height are satisfactory.

21.2.3 All openings of air and sounding pipes are to be provided with permanently attached satisfactory means of closing to prevent the free entry of water. Air pipes are to be provided with automatic closing devices.

21.2.4 Striking plates of suitable thickness or equivalent are to be fitted under all sounding pipes.

21.2.5 Air and sounding pipes are to be well protected in all cargo spaces or other areas where damage might likely occur.

Chapter 22

Scuppers and Sanitary Discharges

22.1 Scuppers and Sanitary Discharges

22.1.1 Scuppers of sufficient number and size to provide effective drainage are to be fitted in all decks. However for the drainage of enclosed cargo spaces situated on the bulkhead deck of a passenger ship or on the freeboard deck of a cargo ship, the Society may permit the means of drainage to be dispensed with in any particular compartment of any ship or class of ship provided that the safety of the ship is considered not to be impaired by reasons coming from size or internal subdivision of those spaces.

22.1.2 Scuppers draining from the weather deck and spaces within the superstructure or the deckhouse not fitted with efficient weathertight doors are to be led overboard.

22.1.3 Scuppers and discharges draining from the space below the freeboard deck or the space within the superstructure or the deckhouse on the freeboard deck fitted with efficient weathertight doors may be led to the bilge, but may be led overboard provided that the space drained is above the load waterline, and pipes are fitted with efficient and accessible means of preventing water from passing inboard as required by 22.1.4 below.

22.1.4 Automatic non-return valves

(a) Non-return valves

Normally each separate discharge is to have one automatic non-return valve with positive means of closing it from a position above the freeboard deck. Where the inboard end of the discharge pipe is located at least 0.01L above the Summer Load Line, the discharge may have 2 automatic non-return valves without positive means of closing. Where that vertical distance exceeds 0.02L, a single automatic non-return valve without positive means of closing may be accepted. The means for operating the positive action valve are to be readily accessible and provided with an indicator showing whether the valve is open or closed.

(b) One automatic non-return valve and one sluice valve controlled from above the freeboard deck instead of one automatic non-return valve with a positive means of closing from a position above the freeboard deck, is acceptable.

(c) Where 2 automatic non-return valves are required, the inboard valve is always to be accessible for examination under service conditions (i.e., the inboard valve is to be above the level of the Tropical Load Line). If this is not practicable, the inboard valve need not be located above the Tropical Load Line, provided that a locally controlled sluice valve is fitted between the two automatic non-return valves.

(d) Where sanitary discharges and scuppers lead overboard through the shell in way of machinery spaces, a locally operated positive closing valve at the shell, together with a non-return valve inboard, is acceptable. The controls of the valves are to be in an easily accessible position.

(e) The position of the inboard end of discharges is to be related to the Summer Timber Load Line when a timber freeboard is assigned.

(f) The requirements for non-return valves are applicable only to those discharges which remain open during the normal operation of a ship. For discharges which are to be kept closed at sea, a single screw down valve operated from the deck is acceptable.

(g) Table II 22-1 provides the acceptable arrangements of scuppers, inlets and discharges.

22.1.5 Scupper pipes from enclosed cargo spaces on the bulkhead deck of a passenger ship or on the freeboard deck of a cargo ship are to be in accordance with the following requirements.

(a) Where the freeboard to the bulkhead deck or the freeboard deck, respectively, is such that the deck edge is immersed when the ship heels more than 5°, the drainage shall be by means of a sufficient number of scuppers of suitable size discharging directly overboard, fitted in accordance with the requirements of SOLAS Regulation II-1/15 in the case of a passenger ship and the requirements for scuppers, inlets and discharges of the International Convention on Load Lines in force in the case of a cargo ship.

(b) Where the freeboard is such that the edge of the bulkhead deck or the edge of the freeboard deck, respectively, is immersed when the ship heels 5° or less, the drainage of the enclosed cargo spaces on the bulkhead deck or on the freeboard deck, respectively, shall be led to a suitable space, or spaces, of adequate capacity, having a high water level alarm and provided with suitable arrangements for discharge overboard. In addition, it is to be ensured that:

(i) the number, size and disposition of the scuppers are such as to prevent unreasonable accumulation of free water;

(ii) the pumping arrangements required for passenger ships or cargo ships, as applicable, take account of the requirements for any fixed pressure water-spraying fire-extinguishing system;

(iii) water contaminated with petrol or other dangerous substances is not drained to machinery spaces or other spaces where sources of ignition may be present; and

(iv) where the enclosed cargo space is protected by a carbon dioxide fire-extinguishing system, the deck scuppers are to be fitted with means to prevent the escape of the smothering gas.

22.1.6 Scuppers let through the shell from enclosed superstructures used for the carriage of cargo are to be permitted only where the edge of the freeboard deck is not immersed when the ship heels 5° either way. In other cases the drainage is to be led inboard in accordance with requirements of the International Convention for the Safety of Life at Sea in force.

22.1.7 In manned machinery spaces, main and auxiliary sea inlets and discharges in connection with the operation of machinery may be controlled locally. The controls are to be readily accessible and are to be provided with indicators showing whether the valves are open or closed.

22.1.8 Scuppers and discharge pipes originating at any level and penetrating the shell either more than 450 mm below the freeboard deck or less than 600 mm above the Summer Load Line are to be provided with a non-return valve at the shell. This valve, unless required by 22.1.4, may be omitted if the piping is of substantial thickness (see 22.1.9 below)

22.1.9 Scupper and discharge pipes

(a) For scupper and discharge pipes, where substantial thickness is not required:

(i) For pipes having an external diameter equal to or less than 155 mm, the thickness is not to be less than 4.5 mm;

(ii) For pipes having an external diameter equal to or more than 230 mm, the thickness is not to be less than 6 mm.

Intermediate sized are to be determined by linear interpolation.

(b) For scupper and discharge pipes, where substantial thickness is required:

(i) For pipes having an external diameter equal to or less than 80 mm, the thickness is not to be less than 7 mm;

(ii) For pipes having an external diameter of 180 mm, the thickness is not to be less than 10 mm;

(iii) For pipes having an external diameter equal to or more than 220 mm, the thickness is not to be less than 12.5 mm.

Intermediate sizes are to be determined by linear interpolation.

22.1.10 In all cargo spaces or other spaces where damage might likely occur, all scuppers and discharges including their valves, controls and indicators are to be well protected.

22.1.11 In cases where fixed pressure water-spraying systems are fitted in closed vehicle and ro/ro spaces and special category spaces, drainage systems are to comply with SOLAS Reg. II-2/20.6.1.4.

22.1.12 Discharges with inboard opening located lower than the ship's uppermost load line may be accepted when a loop of the pipe is arranged between the inboard opening and the outlet in hull. The top of the loop is to be regarded as the position of the inboard opening, and the pipeline shall be provided with valves according to Table II 22-1 of this Chapter.

22.1.13 Gravity discharges from top wing tanks may be arranged. The drop valves shall be of substantial construction and of ductile material, and they are to be closeable from an always accessible position. It is to be possible to blank-flange the discharge or to lock the valves in closed position when the tanks are used for carrying cargo. The thickness of the pipe or box leading from the tank through the shell is to comply with the requirements given for discharges.

22.1.14 Drainage from helicopter decks is to comply with the requirements for the class notation **Helideck-N**.

22.2 Rubbish and Ash Chutes

22.2.1 The inboard opening of each ash-shoot, rubbish-shoot, etc. is to be provided with an efficient cover.

22.2.2 If the inboard opening prescribed in 22.2.1 is situated below the bulkhead deck of passenger ships or the freeboard deck of cargo ships, the cover is to be watertight, and in addition an automatic non-return valve is to be fitted in the ash-shoot, rubbish-shoot, etc. at an easily accessible position above the deepest subdivision load line.

22.2.3 Two gate valves controlled from the working deck of the chute instead of the non-return valve with a positive means of closing from a positive above the freeboard deck which comply with the following requirements are acceptable:

(a) the lower gate valve is to be controlled from a position above the freeboard deck. An interlock system between the 2 valves is to be arranged;

(b) the inboard end is to be located above the waterline formed by an 8.5° heel to port or starboard at a draft corresponding to the assigned summer freeboard, but not less than 1,000 mm above the summer waterline. Where the inboard end exceeds 0.01L above the summer waterline, valve control from the freeboard deck is not required, provided the inboard gate valve is always accessible under service conditions; and

(c) Alternatively, the upper and lower gate valves may be replaced by a hinged weathertight cover at the inboard end of the chute together with a discharge flap. The cover and flap are to be arranged with an interlock so that the discharge flap cannot be operated until the hopper cover is closed.

22.2.4 The entire chute, including the cover, is to be constructed of material of substantial thickness. This implies that the entire chute is to be of at least equivalent strength as the hull it is penetrating.

22.2.5 The controls for the gate valves and/or hinged covers are to be clearly marked: "Keep closed when not in use".

22.2.6 Where the inboard end of the chute is below the freeboard deck of a passenger ship or the equilibrium waterlines of a cargo ship to which damage stability requirements apply, then:

(a) the inboard end hinged cover/valve is to be watertight;

(b) the valve is to be a screw-down non-return valve fitted in an easily accessible position above the deepest load line; and

(c) the screw-down non-return valve is to be controlled from a position above the bulkhead deck and provided with open/closed indicators. The valve control is to be clearly marked: "Keep closed when not in use".

22.3 Materials for Valves and Pipes

22.3.1 All valves and shell fittings required by this Chapter are to be of steel, bronze or other approved ductile materials. Valves of ordinary cast iron or similar material are not acceptable.

22.3.2 All pipes to which this Chapter refers are to be of steel or other equivalent approved materials.

Table II 22-1
Acceptable Arrangements of Scupper, Inlets and Discharges

Discharges coming from enclosed spaces below the freeboard deck or on the freeboard deck		
General requirement (22.1.4) where inboard end ≦0.01L above SWL	Discharges through machinery space	Alternatives (22.1.4) where inboard end ＞0.01L above SWL
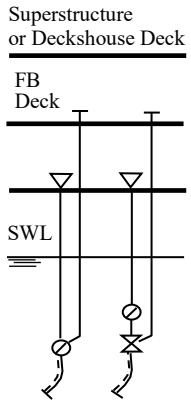	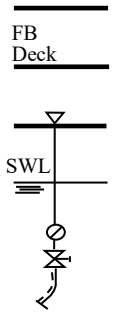	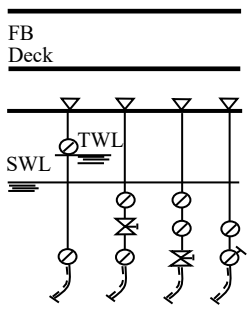

Discharges coming from enclosed spaces below the freeboard deck or on the freeboard deck	Discharges coming from other spaces	
Alternatives (22.1.4) where inboard end ＞0.02L above SWL	Outboard end＞450mm below FB deck or ≦ 600 mm above SWL(22.1.7)	Otherwise (22.1.5)
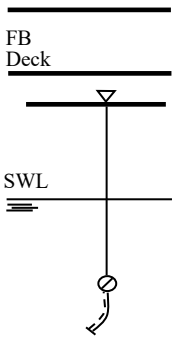	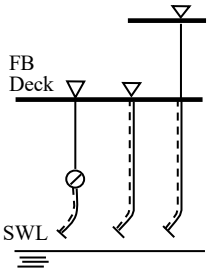	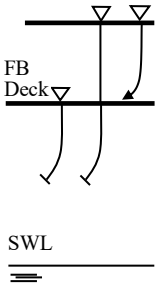

Symbols:					
		⊘	Non return valve without positive means of closing	⊤	Remote control
▽	inboard end of pipes	⊘	Non return valve with positive means of closing controlled locally	|	Normal thickness
⌒	outboard end of pipes				
↙	terminating on the open deck	⧖	Valve controlled locally	¦	Substantial thickness

Chapter 23

Painting

23.1 Painting

23.1.1 Unless otherwise approved, all steel work is to be suitably coated with paint or equivalent except in side tanks intended for oil. Special requirements may be additionally made by the Society in accordance with the kind of ships, purpose of spaces, etc. However, where it is recognized by the Society that the spaces are effectively protected against corrosion of steel works by the means other than painting or due to quality of cargoes, etc., painting may be omitted. The surface of steel works is to be thoroughly cleaned and loose rust, oil and other injurious adhesives are to be removed before being painted. At least the outer surface of shell plating below the load line is to be sufficiently free from rust and mill scale before painting.

23.1.2 Steel work is to be suitably cleaned and cleared of mill scale. It is recommended that blast cleaning or other equally effective means be employed for this purpose.

23.1.3 When the mill scale is removed by methods less effective than shot blasting, it is desirable when several months elapse between launching and delivery, to dry-dock the ship immediately before entry into service.

23.1.4 All dedicated sea water ballast tanks in all types of ships of not less than 500 GT and double-side skin spaces of bulk carriers of 150 m in length and upwards are to have protective coatings in compliance with the requirements of IMO Resolution MSC.215(82).

23.1.5 Corrosion protection of cargo oil tanks of crude oil tankers

(a) Cargo oil tanks of crude oil tankers of 5000 tonnes deadweight and above are to have protective coatings.

(b) The performance standard for protective coatings is to be in compliance with the requirements of IMO Resolution MSC.288(87) or alternative means by IMO Resolution MSC.289(87).

23.1.6 Tanks intended for oil or the holds of combination carriers intended for the carriage of dry bulk cargoes and oil cargoes need not be coated unless required by 23.1.7 below.

23.1.7 For cargo holds on bulk carriers including combination carriers intended for the carriage of dry bulk cargoes, at the time of new construction, all internal and external surfaces of hatch coamings and hatch covers, and all internal surfaces of cargo holds, excluding the flat tank top areas and the hopper tank sloping plating up to approximately 300 mm below the side shell frame end brackets, are to have an efficient protective coating (epoxy coating or equivalent) applied in accordance with the manufacturer's recommendations. In the selection of coating due consideration is to be given by the owner to intended cargo conditions expected in service. For existing bulk carriers, where Owners may elect to coat or recoat cargo holds as noted above, consideration may be given to the extent of the close-up and thickness measurement surveys. Prior to the coating of cargo holds of existing vessels, scantlings are to be ascertained in the presence of the Surveyor. Internal surface of cargo hold includes those surfaces of stiffening members of top wing tank bottom, where fitted on hold side, and deck plating and associated beams, girders, etc. facing holds such as those between the main hatchways. In the selection of coatings, due consideration is to be given by the Owner to the intended cargoes and conditions expected in service.

23.1.8 Tanks or holds for salt water ballast are to have a corrosion resistant hard type coating such as epoxy or zinc on all structural surfaces. Where a long retention of salt water ballast is expected due to the type of vessel or unit, special consideration for the use of inhibitors or sacrificial anodes may be given.

23.1.9 The use of aluminium coatings containing greater than 10% aluminium by weight in the dry film is prohibited in cargo tanks, cargo tank deck area, pump rooms, cofferdams or any other area where cargo vapour may accumulate in tankers and ships carrying dangerous chemicals in bulk intended to carry crude oil and petroleum products having a flashpoint not exceeding 60°C and a Reid vapour pressure below atmospheric pressure or other liquid cargoes having similar fire hazards.

23.2 Cementing

23.2.1 The bottom in ships with single bottoms, the bilges in all ships and the double bottoms in the boiler spaces of all ships are to be efficiently protected by Portland cement or other equivalent materials which cover the plates and frames as far as the upper turn of bilge. However, cement protection may be dispensed with in the bottom of the space solely used for carriage of oil.

23.2.2 Portland cement is to be mixed with fresh water and sand or other satisfactory substances, in the proportion of about one part of cement to two of sand.

23.2.3 The thickness of cement is not to be less than 20 mm at the edges.

23.2.4 The top plating of tanks, where ceiled directly, is to be covered with good tar put on hot and well sprinkled with cement powder, or with other equally effective coatings.

Chapter 24

Rudders

24.1 General

24.1.1 The following requirements generally apply to:

(a) The rudder constructed as a double-plated stream line section, an ordinary shape and not more than 2 pintles, as shown in Fig. II 24-1 and Fig. II 24-2 of this Chapter, designed with a moving angle not more than 35° on each side without any special arrangement for increasing the rudder force, such as fins, flaps, steering propellers, etc. Rudders not confirming with the ordinary types are to be approved under special consideration by the Society.

(b) High-lift rudders described in Table II 24-1 of this Chapter, the rudder operating angle of which might be exceeding 35° on each side at maximum design speed.

(c) Other steering equipment other than rudders identified in this Chapter.

24.1.2 Materials

(a) Rudder stocks, pintles, flanges, coupling bolts, keys and cast parts of rudders are to be made of rolled, forged steel or cast carbon manganese steel conforming to the requirements of Part XI.

(b) Welded part of rudders are to be made of approval rolled hull materials.

(c) Material factor K for normal and high tensile steel plating may be taken into account when specified in each individual rule requirement. The material factor K is to be taken as defined in 1.5.2(a) of this Part, unless otherwise specified.

(d) For rudder stocks, pintles, keys and bolts the minimum yield stress is not to be less than 200 N/mm^2. The requirements in this Chapter are based on a material's yield stress of 235 N/mm^2. If material is used having a yield stress differing from 235 N/mm^2, the material factor K is to be determined as specified in 1.5.2(c) of this Part.

(e) Before significant reductions in rudder stock diameter due to the application of higher tensile steels are granted, the evaluation of the large rudder stock deformations is to be submitted for consideration in order to avoid excessive edge pressure in way of bearings.

24.1.3 Effective means are to be provided for preventing the rudder from jumping and for supporting the weight of the rudder without excessive bearing pressure. They are to be arranged to prevent accidental unshipping or undue movement of the rudder which may cause damage to the steering gear.

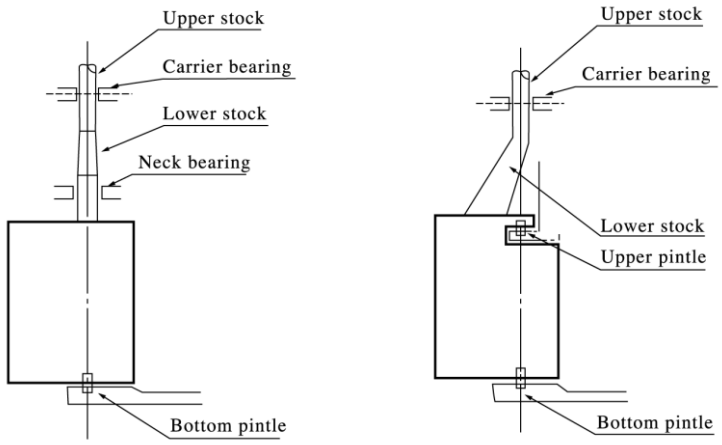

Fig. II 24-1
Shoe piece Supported Type Rudder

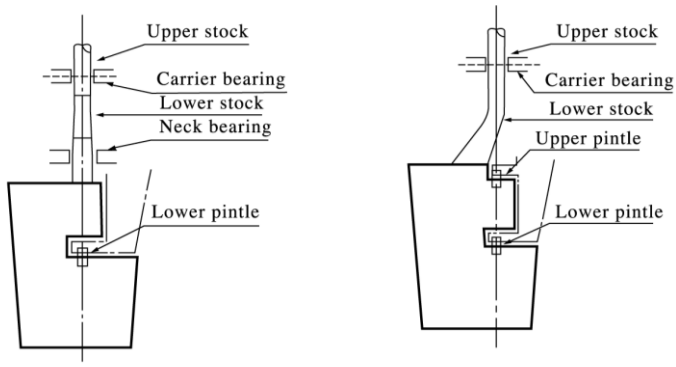

Fig. II 24-2
Horn Supported Type Rudder

24.1.4 Welding and design details

(a) Slot-welding is to be limited as far as possible. Slot welding is not to be used in areas with large in-plane stresses transversely to the slots or in way of cut-out areas of semi-spade rudders.

When slot welding is applied, the length of slots is to be minimum 75 mm with breadth of 2 t, where t is the rudder plate thickness, in mm. The distance between ends of slots is not to be more than 125 mm. The slots are to be fillet welded around the edges and filled with a suitable compound, e.g. epoxy putty. Slots are not to be filled with weld.

Continuous slot welds are to be used in lieu of slot welds. When continuous slot welding is applied, the root gap is to be between 6-10 mm. The bevel angle is to be at least 15°.

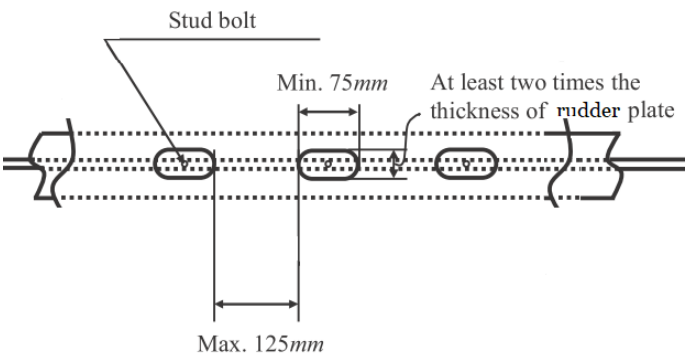

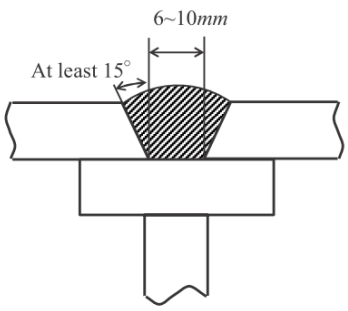

(b) In way of the rudder horn recess of semi-spade rudders, the radii in the rudder plating are not to be less than 5 times the plate thickness, but in no case less than 100 mm. Welding in side plate is to be avoided in or at the end of the radii. Edges of side plate and weld adjacent to radii are to be ground smooth.

(c) Welds between plates and heavy pieces (solid parts in forged or cast steel or very thick plating) are to be made as full penetration welds. In way of highly stressed areas e.g. cut-out of semi-spade rudder and upper part of spade rudder, cast or welding on ribs is to be arranged. Two sided full penetration welding is normally to be arranged. Where back welding is impossible welding is to be performed against ceramic backing bars or equivalent. Steel backing bars may be used and are to be continuously welded on one side to the heavy piece.

(d) Requirements for welding and design details of rudder trunks are described in 24.10 of this Chapter.

(e) Requirements for welding and design details when the rudder stock is connected to the rudder by horizontal flange coupling are described in 24.5.1 of this Chapter.

(f) Requirements for welding and design details of rudder horns are described in 2.2.5 of this Part.

24.1.5 Equivalence

(a) The Society may accept alternatives to requirements given in this Chapter, provided they are deemed to be equivalent.

(b) Direct analyses adopted to justify an alternative design are to take into consideration all relevant modes of failure, on a case by case basis. These failure modes may include, amongst others: yielding, fatigue, buckling and fracture. Possible damages caused by cavitation are also to be considered.

(c) If deemed necessary by the Society, lab tests, or full scale tests may be requested to validate the alternative design approach.

24.2 Rudder Force and Rudder Torque

24.2.1 Rudder blades without cut-outs

(a) The rudder force upon which the rudder scantlings are to be based is to be determined from the following formula:

$$F = 132\, K_1\, K_2\, K_3\, A\, V^2 \qquad \text{N}$$

where:

F	=	Rudder force, in N.
A	=	Area of rudder blade, in m^2.
V	=	Maximum service speed of ship, in knots, with the ship on summer load waterline, when the service speed ≥ 10 knots.
	=	$\frac{1}{3}(V + 20)$ when the service speed < 10 knots.
	=	Maximum astern speed for astern condition, however in no case less than 50% of maximum service speed, in knots.
K_1	=	Factor depending on the aspect ratio λ of the rudder area.
	=	$\frac{1}{3}(\lambda + 2)$
λ	=	$\frac{h^2}{A_t} \leq 2$
h	=	Mean height of rudder area, in m, as shown in Fig. II 24-3 of this Chapter.
A_t	=	Sum of rudder blade area A and area of rudder post or rudder horn, if any, within the mean height h, in m^2.
K_2	=	Factor depending on the rudder profile as specified in Table II 24-1 of this Chapter.

K_3 = 0.8 for rudders outside the propeller jet.
= 1.15 for rudders behind a fixed propeller nozzle.
= 1.0 otherwise.

(b) The rudder torque is to be calculated for both the ahead and astern condition from the following formula:

$Q = F\,r$ N-m

where:

Q	=	Rudder torque, in N-m.
r	=	$b\,(\alpha - k)$,in m,
	≥	0.1 b for ahead condition, in m.
b	=	Mean breadth of rudder area, in m, see Fig. II 24-3 of this Chapter.
α	=	0.33 for ahead condition.
	=	0.66 for astern condition.
k	=	Balance factor.
	=	$\frac{A_f}{A}$
A_f	=	Portion of the rudder blade area situated ahead of the center line of the rudder stock, in m^2.
A	=	As specified in (a) above.

24.2.2 Rudder blades with cut-outs (semispade rudders)

(a) The rudder force of each part may be taken as:

$F_1 = F\frac{A_1}{A}$ N

$F_2 = F\frac{A_2}{A}$ N

where:

A	=	As specified in 24.2.1 (a) above.
	=	$A_1 + A_2$ see Fig. II 24-4 of this Chapter.

(b) The total resulting torque may be taken as:

$Q = Q_1 + Q_2$ N-m

where:

Q	=	Total torque, in N-m.
	≥	$0.1F\left(\frac{A_1b_1 + A_2b_2}{A}\right)$ for ahead condition
Q_1	=	$F_1\,r_1$ N-m
Q_2	=	$F_2\,r_2$ N-m
r_1	=	$b_1(\alpha - k_1)$ lever of A_1, in m.
r_2	=	$b_2(\alpha - k_2)$ lever of A_2, in m.
b_1 and b_2	=	Mean breadth of partial areas A_1 and A_2.
α	=	0.33 for ahead condition.
	=	0.66 for astern condition.
	=	0.25 for ahead condition with concerned rudder part behind a fixed structure such as rudder horn
	=	0.55 for astern condition with concerned rudder part behind a fixed structure such as rudder horn.
k_1	=	$\frac{A_{1f}}{A_1}$
k_2	=	$\frac{A_{2f}}{A_2}$

Table II 24-1
Factor of K_2

Profile type	K_2	
	Ahead condition	Astern condition
NACA-00 series Göttingen 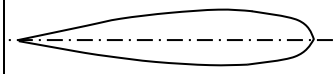	1.10	0.80
Flat side 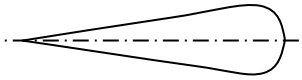	1.10	0.90
Hollow 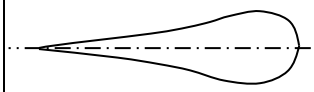	1.35	0.90
High lift rudders	1.70	to be specially considered; if not known: 1.30
Fish tail	1.40	0.80
Single plate 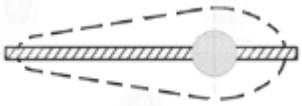	1.00	1.00
Mixed profiles (e.g. HSVA)	1.21	0.90

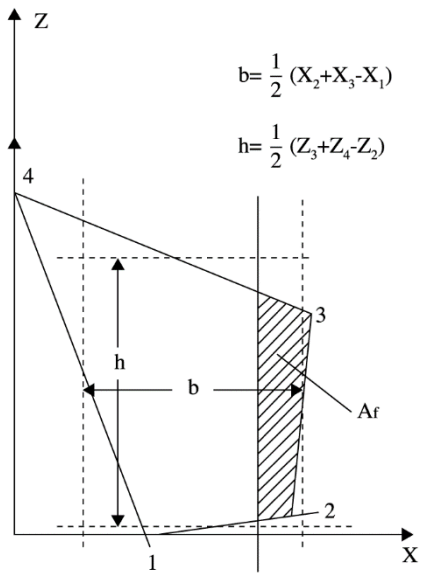

Fig. II 24-3
Rudder Blade without Cutout

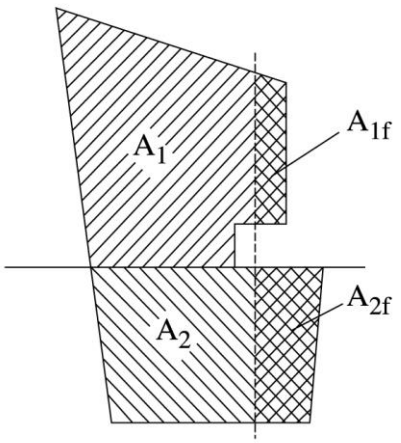

A_1 and A_2 include A_{1f} and A_{2f} respectively

Fig. II 24-4
Rudder Blade with Cutout

24.2.3 Rudder strength calculation

(a) The rudder strength is to be sufficient against the rudder force and rudder torque as given in 24.2.1 and 24.2.2 above. When the scantling of each part of a rudder is determined, the following moments and forces are to be considered:

For rudder body: bending moment and shear force

For rudder stock: bending moment and torque

For pintle bearing and rudder stock bearing: supporting force

For rudder horn and heel piece: bending moment shear force and torques.

(b) The bending moments, shear forces and supporting forces to be considered are to be determined by a direct calculation or by an approximate simplified method as deemed appropriate by the Society. For rudder supported by shoe pieces or rudder horns, these structures are to be included in the calculation model in order to account for the elastic support of the rudder body.

24.2.4 Rudder blades with twisted leading-edge

(a) This kind of rudder has the leading edge twisted horizontally on the top and bottom of the section that is an extension of the center of the propeller shaft. For the purpose of calculating design force, twisted rudders may be distinguished in four categories:

Category	Description
1	The projected leading edge of twisted upper and lower blades not lineup to each other
2	The projected leading edge of twisted upper and lower blades form a straight line
3	Rudder with twisted leading edge combined with tail edge flap or fins
4	The twisted leading edge has a smooth continuous wavy contour (no deflector) or the rudder has multiple section profile types

Design force for rudder with twisted leading edge is obtained according to the following criteria:

(i) For Category 1 rudders as indicated in the above table, design force over upper and lower rudder blades are obtained from the following equations respectively:

$$F_1 = 132\, K_1\, K_2\, K_3\, A_1 V^2 \quad \text{N}$$
$$F_2 = 132\, K_1\, K_2\, K_3\, A_2 V^2 \quad \text{N}$$
$$F = F_1 + F_2 \quad \text{N}$$

(ii) For Categories 2, 3, and 4, rudder design force indicated in 24.2.1(a) is applicable, that is:

$$F = 132\, K_1\, K_2\, K_3\, A V^2 \quad \text{N}$$

where:

K_1, K_2, K_3, A, and V are as defined in 24.2.1(a), (for rudder has multiple section profile types, A is the whole projected areas).

A_1 and A_2 are the projected areas of upper and lower blades separated at the deflector cross section, respectively. Where the effective projected area of rudder bulb (if present) forward of rudder leading edge is significant and needs to be counted, the proportioned bulb effective areas are added to A_1 and A_2 accordingly.

Values of K_2 for ahead and astern conditions are determined from one of the methods below as applicable, if the type of basic rudder profile is not provided:

(1) K_2 is taken from Table II 24-1 of this Chapter for twisted rudders of Categories 1 & 2;

(2) K_2 is taken from Table II 24-1 of this Chapter for twisted rudders of Category 3;

(3) K_2 is subjected to special considerations for twisted rudders of Category 4;

(4) Shipyard/rudder manufacturers' submitted K_2 obtained from testing data or calculations may be accepted subject to the Society's review of all the supporting documents;

(b) The rudder design torque, Q, for rudder scantling calculations, is to be in accordance with 24.2.1(a) or 24.2.2(b) of this Chapter as applicable.

24.3 Rudder Stock

24.3.1 The rudder stock diameter required for the transmission of the rudder torque is to be dimensioned such that the torsional stress is not exceeding the following value:

$\tau_T = 68/K$ N/mm^2

The rudder stock diameter for the transmission of the rudder torque is therefore not to be less than:

$$d_t = 4.2\sqrt[3]{QK} \quad \text{mm}$$

where:

d_t	=	Rudder stock diameter for the transmission of the rudder torque in mm.
K	=	Material factor as specified in 1.5.2(c) of this part.
Q	=	As specified in 24.2.1(b) and/or 24.2.2 above.

24.3.2 Rudder stock scantlings due to combined loads

If the rudder stock is subjected to combined torque and bending, the equivalent stress in the rudder stock is not to exceed 118/K, N/mm^2.

The equivalent stress is to be determined by the formula:

$$\sigma_c = \sqrt{\sigma_b^2 + 3\tau_t^2} \quad \text{N/mm}^2$$

Bending stress:

$$\sigma_b = 10.2 \times 10^3 M / d_c^3 \quad \text{N/mm}^2$$

Torsional stress:

$$\tau_t = 5.1 \times 10^3 Q / d_c^3 \quad \text{N/mm}^2$$

The stock diameter is therefore not to be less than:

$$d_c = d_t \sqrt[6]{1 + \frac{4}{3}\left(\frac{M}{Q}\right)^2} \quad \text{mm}$$

where:

d_t	=	Rudder stock diameter for the transmission of the rudder torque, in mm, as given in 24.3.1 above.
M	=	Bending moment, at the section of the rudder stock considered, in N-m.
Q	=	As specified in 24.2.1(b) above.

24.3.3 Increase in Diameter of Rudder Stocks for Special Cases

(a) In ships which may be frequently steered at a large helm angle when sailing at their maximum speed, such as fishing vessels, the diameters of rudder stocks and pintles, as well as the section modulus of mainpieces, are not to be less than 1.1 times those required in this Chapter.

(b) In ships which might require quick steering, the diameter of rudder stocks is to be properly increased beyond the requirements in this Chapter.

24.3.4 Before significant reductions in rudder stock diameter due to the application of steels with yield stresses exceeding 235 N/mm^2 are granted, the Society may require the evaluation of the rudder stock deformations. Large deformations of the rudder stock are to be avoided in order to avoid excessive edge pressures in way of bearings.

24.4 Rudder Plates, Rudder Webs and Rudder Main Pieces

24.4.1 Permissible stresses

The section modulus and the web area of a horizontal section of the rudder blade made of ordinary hull structural steel are to be such that the following stresses will not be exceeded:

(a) Rudder blades without cut-outs (Fig. II 24-3 of this Chapter)

(i)	bending stress: σ_b	110/K	N/mm^2
(ii)	shear stress: τ	50/K	N/mm^2
(iii)	equivalent stress: $\sigma_c = \sqrt{\sigma_b^2 + 3\tau^2}$	120/K	N/mm^2

K = Material factor for the rudder plating as given in 1.5.2(a) of this Part

(b) Rudder blades with cut-outs (e.g. semi-spade rudders. Fig. II 24-4 of this Chapter)

(i)	bending stress: σ_b	75	N/mm^2
(ii)	shear stress in way of cut-outs: τ	50	N/mm^2
(iii)	equivalent stress: $\sigma_c = \sqrt{\sigma_b^2 + 3\tau^2}$	100	N/mm^2

Note: The stresses in (b) apply equally to high tensile and ordinary steels.

24.4.2 The thickness of the rudder side, top and bottom plating made of ordinary hull structural steel is not to be less than the value obtained from the following formula:

$$t = 5.5\, s\beta\sqrt{K}\sqrt{d_f + F \times 10^{-4}/A} + 2.5 \qquad \text{mm}$$

where:

d_f	=	Summer loadline draught of the ship, in m.
F	=	Rudder force, in N.
A	=	Rudder area, in m^2.
β	=	$\sqrt{1.1 - 0.5\left(\frac{s}{b}\right)^2}$, max. 1.00 for $\frac{b}{s} \geq 2.5$
s	=	Smallest unsupported width of plating, in m.
b	=	Greatest unsupported width of plating, in m.
K	=	Material factor for the rudder plating as given in 1.5.2(a) of this Part.

24.4.3 The plating is to be suitably stiffened by vertical and horizontal webs. The thickness of web plates is not to be less than 70% of the rudder side plating, however, not less than 8 mm. For higher tensile steels the material factor according to 1.5.2(c) of this Part is to be used.

24.4.4 Mainpiece

(a) The thickness of the plating of the rudder with plate frames may require to be increased in way of vertical webs which replace the mainpiece.

(b) Horizontal webs and vertical webs not replacing the mainpiece are to have the same thickness as the rudder plating, but plates forming the top and the bottom of the rudder are to be of increased thickness.

(c) Vertical webs replacing the mainpiece may be required to be increased in thickness.

(d) The spacing of vertical webs are generally not to be larger than 1.5 times the horizontal web spacing.

24.4.5 Single plate rudder

(a) The mainpiece diameter is to be calculated according to 24.3.1 and 24.3.2 of this Chapter respectively. For spade rudders the lower third may taper down to 0.75 times stock diameter.

(b) The blade thickness, t_b, is not to be less than the value obtained from the following formula:

$$t_b = 1.5sV\sqrt{K} + 2.5 \qquad \text{mm}$$

where:

s	=	Spacing of stiffening arms, in m, not to exceed 1 m.
V	=	Speed, in knots, as specified in 24.2.1(a) of this Chapter.
K	=	Material factor for the rudder plating as given in 1.5.2(a) of this Part.

(c) The thickness of the arms, t_a, is not to be less than the blade thickness, t_b:

$t_a \geq t_b$

(d) The section modulus, Z, of each set of arms about the axis of the rudder stock is not to be less than the value obtained from the following formula:

$Z = 0.5\ s\ x^2\ V^2 K$ $\quad cm^3$

where:

s	=	Spacing of stiffening arms, in m, not to exceed 1 m.
V	=	Speed, in knots, as specified in 24.2.1(a) of this Chapter.
x	=	Horizontal distance from the aft edge of the rudder to the centerline of the rudder stock, in m.
K	=	Material factor as given in 1.5.2(a) or 1.5.2(c) of this Part respectively

24.4.6 Rudder Frame

(a) The rudder body is to be stiffened by horizontal and vertical rudder frames enabling it to withstand bending like a girder.

(b) The standard spacing of horizontal rudder frames is to be obtained from the following formula:

$0.2(L/100) + 0.4$ $\quad m$

(c) The standard distance from the vertical rudder frame forming the rudder main piece to the adjacent vertical frame is to be 1.5 times the spacing of horizontal rudder frames.

(d) The thickness of rudder frames is not to be less than 8 mm or 70% of the thickness of the rudder plates as given in 24.4.2 of this Chapter, whichever is greater.

24.4.7 Connections of rudder blade structure with solid parts

(a) Solid parts in forged or cast steel, which house the rudder stock or the pintle, are normally to be provided with protrusions.

These protrusions are not required when the web plate thickness is less than:

- 10 mm for web plates welded to the solid part on which the lower pintle of a semi-spade rudder is housed and for vertical web plates welded to the solid part of the rudder stock coupling of spade rudders.
- 20 mm for other web plates.

(b) The solid parts are in general to be connected to the rudder structure by means of two horizontal web plates and two vertical web plates.

(c) Minimum section modulus of the connection with the rudder stock housing.

The section modulus of the cross-section of the structure of the rudder blade, in cm^3, formed by vertical web plates and rudder plating, which is connected with the solid part where the rudder stock is housed is to be not less than:

$$W_s = C_s\, d_c^3 \left[\frac{H_E - H_x}{H_E} \right] \frac{K}{K_s}\, 10^{-4} \qquad cm^3$$

where:

C_s = Coefficient, to be taken equal to:

1.0: if there is no opening in the rudder plating or if such openings are closed by a full penetration welded plate

1.5: if there is an opening in the considered cross-section of the rudder

d_c = Rudder stock diameter, in [mm], according to 24.3.2 of this Chapter

H_E = Vertical distance between the lower edge of the rudder blade and the upper edge of the solid part, in m

H_x = Vertical distance between the considered cross-section and the upper edge of the solid part, in m

K = Material factor for the rudder blade plating as given in 1.5.2(a) of this Part

K_s = Material factor for the rudder stock as given in 1.5.2(c) of this Part

The actual section modulus of the cross-section of the structure of the rudder blade is to be calculated with respect to the symmetrical axis of the rudder. The breadth of the rudder plating, in m, to be considered for the calculation of section modulus is to be not greater than:

$b = s_v + 2H_x / 3$ m

where:

s_v = Spacing between the two vertical webs, in m (see Fig. II 24-5 of this Chapter)

Where openings for access to the rudder stock nut are not closed by a full penetration welded plate, they are to be deducted.

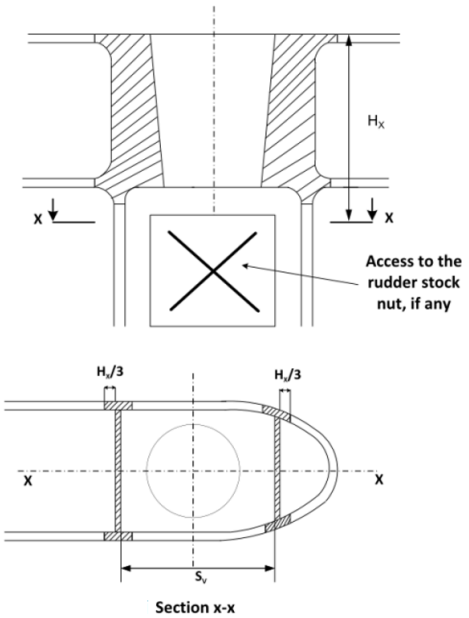

Fig. II 24-5
Cross-section of the Connection Between Rudder Blade Structure and Rudder Stock Housing

(d) The thickness of the horizontal web plates connected to the solid parts, in mm, as well as that of the rudder blade plating between these webs, is to be not less than the greater of the following values:

$t_H = 1.2\ t$ mm
$t_H = 0.045 d_s^2 / s_H$ mm

where:

t = Defined in 24.4.2 of this Chapter

d_s = Diameter, in mm, to be taken equal to:

d_c , as per 24.3.2 of this Chapter, for the solid part housing the rudder stock

d_p , as per 24.6.1 of this Chapter, for the solid part housing the pintle

s_H = Spacing between the two horizontal web plates, in mm

The increased thickness of the horizontal webs is to extend fore and aft of the solid part at least to the next vertical web.

(e) The thickness of the vertical web plates welded to the solid part where the rudder stock is housed as well as the thickness of the rudder side plating under this solid part is to be not less than the values obtained, in mm, from Table II 24-2 of this Chapter.

Table II 24-2
Thickness of Side Plating and Vertical Web Plates

Type of rudder	Thickness of vertical web plates (mm)		Thickness of rudder plating (mm)	
	Rudder blade without opening	Rudder blade with opening	Rudder blade without opening	Area with opening
Rudder supported by sole piece	1.2t	1.6t	1.2t	1.4t
Semi-spade and spade rudders	1.4t	2.0t	1.3t	1.6t
t = thickness of the rudder plating, in mm, as defined in 24.4.2.				

The increased thickness is to extend below the solid piece at least to the next horizontal web.

24.5 Rudder Stock Couplings

24.5.1 Horizontal flange couplings

(a) Coupling bolts are to be reamer bolts. The diameter of the coupling bolts is not to be less than the value obtained from the following formula:

$$d_b = 0.62\sqrt{\frac{d^3 K_b}{neK_s}} \quad \text{mm}$$

where:

d = Stock diameter, in mm, the greater of the d_u or d_l as specified in 24.3.1 and 24.3.2 of this chapter.
n = Total number of reamer bolts, to be greater or equal to 6.
e = Mean distance of the bolt axes from the center of the bolt system, in mm.
K_b = Material factor for the bolt as specified in 1.5.2(c) of this Part.
K_s = Material factor for the stock as specified in 1.5.2(c) of this Part.

(b) The thickness of the coupling flanges is not to be less than the value obtained from the following formula:

$$t_f = d_b\sqrt{\frac{K_f}{K_b}} \quad \text{mm}$$

where:

t_f = Thickness of coupling flanges, in mm. $\geq 0.9\ d_b$
d_b = Bolt diameter, in mm, for a number of bolts not exceeding 8.
K_b = Material factor for the bolt as specified in 1.5.2(c) of this Part.
K_f = Material factor for the flange as specified in 1.5.2(c) of this Part.

(c) The width of material outside the bolt holes is not to be less than 0.67 d_b.

(d) The welded joint between the rudder stock and the flange is to be made in accordance with Fig. II 24-6 of this Chapter or equivalent.

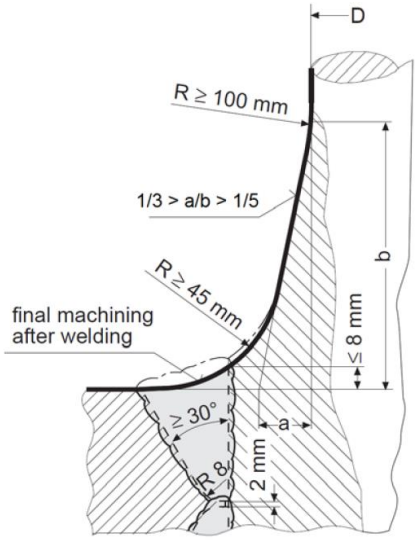

Fig. II 24-6
Welded Joint Between Rudder Stock and Coupling Flange

(e) Coupling bolts are to be fitted bolts and their nuts are to be locked effectively.

24.5.2 Cone couplings with key

(a) Cone couplings without hydraulic arrangements for mounting and dismounting the coupling should have a taper c on diameter of 1:8 - 1:12, where:

$c = (d_o - d_u) / l$ (see Fig. II 24-7 of this Chapter)

The cone coupling is to be secured by a slugging nut. The nut is to be secured, e.g. by a securing plate.

(b) The taper length, *l*, of rudder stocks fitted into the rudder blade and secured by a slugging nut is generally not be less than 1.5 times the rudder stock diameter, d_o, at the top of the rudder.

(c) For couplings between stock and rudder a suitable key is to be provided.

(d) The dimensions of the slugging nut are to be as follows:

External thread diameter: $d_g \geq 0.65\ d_o$

Height $h_n \geq 0.6\ d_g$

Outer diameter of nut: $d_n \geq 1.2\ d_u$ or $1.5\ d_g$ whichever is greater.

(e) Cone couplings with hydraulic arrangements for mounting and dismounting the coupling are to have a taper on diameter of 1:12 to 1:20.

(f) The data of the push-up oil pressure and the push-up length based on a calculation is to be submitted by the shipyard.

(g) The nuts fixing the rudder stocks are to be provided with efficient locking devices.

(h) Couplings of rudder stocks are to be properly protected from corrosion.

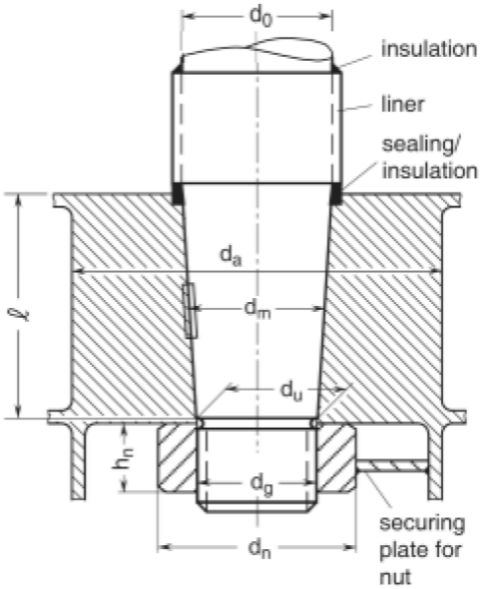

Fig. II 24-7
Cone Coupling with Key

(i) Dimensions of key

For couplings between stock and rudder a key is to be provided, the shear area of which, in cm^2, is not to be less than:

$$a_s = \frac{17.55Q_F}{d_k\sigma_{F1}}$$

where:

Q_F = design yield moment of rudder stock, in Nm
= $0.02664 \cdot d_t^3 / K$

Where the actual diameter d_{ta} is greater than the calculated diameter d_t , the diameter d_{ta} is to be used. However, d_{ta} applied to the above formula need not be taken greater than 1.145 d_t.

d_t = stock diameter, in mm, according to 24.3.1 of this Chapter
K = material factor for stock as given in 1.5.2(c) of this Part.
d_k = mean diameter of the conical part of the rudder stock, in mm, at the key
σ_{F1} = minimum yield stress of the key material, in N/mm^2

The effective surface area, in cm^2, of the key (without rounded edges) between key and rudder stock or cone coupling is not to be less than:

$$a_k = \frac{5Q_F}{d_k\sigma_{F2}}$$

where:

σ_{F2} = minimum yield stress of the key, stock or coupling material, in N/mm^2, whichever is less.

24.5.3 Vertical flange couplings

(a) Coupling bolts are to be reamer bolts and their diameters are not to be less than the value obtained from the following formula:

$$d_b = 0.81d\sqrt{\frac{K_b}{nK_s}} \qquad \text{mm}$$

where:

d	=	Stock diameter, in mm, as specified in 24.5.1 (a) of this Chapter.
n	=	Total number of bolts, which is not to be less than 8.
K_b	=	Material factor for the bolt as specified in 1.5.2 (c) of this Part.
K_s	=	Material factor for the stock as specified in 1.5.2 (c) of this Part.

(b) The first moment of area of the bolts about the center of the coupling, M, is to be not less than the value obtained from the following formula:

$$M = 0.00043\, d^3 \qquad \text{cm}^3$$

(c) The thickness of the coupling flanges must be at least equal to the bolt diameter, and the width of the flange material outside the bolt holes is not to be less than 0.67 d_b.

(d) Coupling bolts are to be fitted bolts and their nuts are to be locked effectively.

24.5.4 Cone couplings with special arrangements for mounting and dismounting the couplings

(a) Where the stock diameter exceeds 200 mm, the press fit is recommended to be effected by a hydraulic pressure connection. In such cases the cone is to be more slender, c ≈1:12 to ≈1:20.

In case of hydraulic pressure connections the nut is to be effectively secured against the rudder stock or the pintle.

For the safe transmission of the torsional moment by the coupling between rudder stock and rudder body the push-up pressure and the push-up length are to be determined according to 24.5.4(b) and 24.5.4(c) of this Chapter respectively.

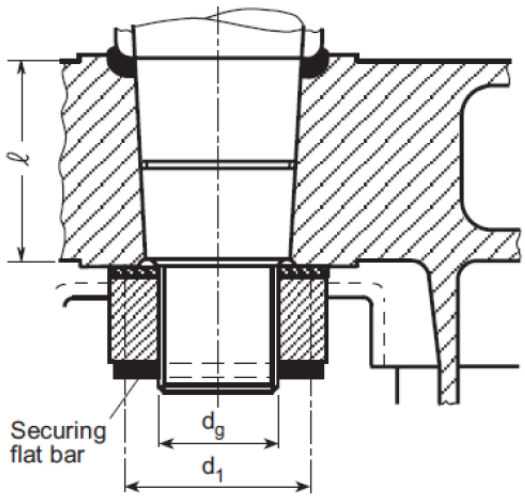

Fig. II 24-8
Cone Coupling without Key

(b) Push-up pressure

The push-up pressure, is not to be less than the greater of the two following values:

$$p_{req1} = \frac{2Q_F}{d_m^2 l \pi \mu_0} 10^3 \qquad \text{N/mm}^2$$

$$p_{req2} = \frac{6M_b}{l^2 d_m} 10^3 \qquad \text{N/mm}^2$$

where:

Q_F	=	design yield moment of rudder stock, as defined in 24.5.2(i) of this Chapter, in Nm
d_m	=	mean cone diameter in mm, see Fig. II 24-7 of this Chapter
l	=	cone length in mm
μ_0	=	frictional coefficient, equal to 0.15
M_b	=	bending moment in the cone coupling (e.g. in case of spade rudders), in Nm

It has to be proved by the designer that the push-up pressure does not exceed the permissible surface pressure in the cone. The permissible surface pressure, in N/mm^2, is to be determined by the following formula:

$$p_{perm} = \frac{0.8R_{eH}(1-a^2)}{\sqrt{3+a^4}} \qquad N/mm^2$$

where:

R_{eH}	=	minimum yield stress of the material of the gudgeon in N/mm^2
a	=	d_m / d_a
d_m	=	diameter, in mm, see Fig. II 24-7 of this Chapter
d_a	=	outer diameter of the gudgeon to be not less than 1.5 d_m, see Fig. II 24-7 of this Chapter

(c) Push-up length

The push-up length Δl, in mm, Δl is to comply with the following formula:

$\Delta l_1 \leq \Delta l \leq \Delta l_2$

where:

$$\Delta l_1 = \frac{p_{req}d_m}{E\left(\frac{1-a^2}{2}\right)c} + \frac{0.8R_{tm}}{c} \qquad mm$$

$$\Delta l_2 = \frac{1.6R_{eH}d_m}{Ec\sqrt{3+a^4}} + \frac{0.8R_{tm}}{c} \qquad mm$$

R_{tm}	=	mean roughness, in mm taken equal to 0.01
c	=	taper on diameter according to 24.5.4(a) of this Chapter
E	=	Young's modulus of the material of the gudgeon, in N/mm^2

d_m, R_{eH}, a, p_{req} = As specified in 24.5.4(b) above.

Notwithstanding the above, the push up length is not to be less than 2 mm.

Note: In case of hydraulic pressure connections the required push-up force P_e, in N, for the cone may be determined by the following formula:

$$P_e = p_{req}d_m\pi\, l\left(\frac{c}{2} + 0.02\right)$$

The value 0.02 is a reference for the friction coefficient using oil pressure. It varies and depends on the mechanical treatment and roughness of the details to be fixed. Where due to the fitting procedure a partial push-up effect caused by the rudder weight is given, this may be taken into account when fixing the required push-up length, subject to approval by the Society.

24.6 Pintles

24.6.1 The minimum pintle diameter is to be as follows:

$$d_p = 0.35\sqrt{BK_p} \qquad \text{mm}$$

where:
B = The reaction force in bearing, in N.
K_p = Material factor for the pintle as specified in 1.5.2(c) of this Part.

24.6.2 Pintles are to have a conical attachment to the cast part of rudder with a taper on diameter of:

1:8 to 1:12 for keyed and other manually assembled pintles applying locking by slugging nut.
1:12 to 1:20 for pintles mounted with oil injection and hydraulic nut.

24.6.3 The length of the taper is not to be less than the minimum pintle diameter d_p in 24.6.1 above.

24.6.4 The minimum dimensions of threads and nuts are to be determined according to 24.5.2(d) of this Chapter.

24.6.5 Push-up pressure for pintle bearings
The required push-up pressure p_{req} for pintle bearings, in N/mm², is to be determined by the following formula:

$$p_{req} = 0.4\frac{B_1 d_0}{d_m^2\, l}$$

where:
B_1 = Supporting force in the pintle bearing, in N
d_0 = Pintle diameter, in mm, see Fig. II 24-7 of this Chapter

The push up length is to be calculated similarly as in 24.5.4(c) of this Chapter, using required push-up pressure and properties for the pintle bearing.

24.7 Rudder Stock Bearings, Rudder Shaft Bearing and Pintle Bearings

24.7.1 Bearing surface

(a) The bearing surface, A_b, defined as the projected area: length × outside diameter of sleeve, is not to be less than the value obtained from the following formula:

$$A_b = \frac{B}{q_a} \qquad \text{mm}^2$$

where:
B = Reaction force, in N, as specified in 24.6 above.
q_a = Allowable surface pressure as listed in Table II 24-3 of this Chapter.

(b) An adequate lubrication is to be ensured.

24.7.2 The length/diameter ratio of the bearing surface is not to be less than 1.0 or greater than 1.2, unless calculations are submitted and approved which show the clearance at both ends of the bearing is acceptable.

24.7.3 Metal bearings clearances are not to be less than $\frac{d_{bs}}{1000} + 1.0$ mm on the diameter. Where d_{bs}: Inter diameter of bush, in mm. If nonmetallic bearing material is applied, the bearing clearance is to be specially determined considering the materials swelling and thermal expansion properties. This clearance is not to be taken less than 1.5 mm on bearing

diameter unless a smaller clearance is supported by the manufacturer's recommendation and there is documented evidence of satisfactory service history with a reduced clearance.

24.7.4 Liners and bushes

(a) Rudder stock bearing

Liners and bushes are to be fitted in way of bearings. The minimum thickness of liners and bushes is to be equal to:

t_{min} = 8 mm for metallic materials and synthetic material
t_{min} = 22 mm for lignum material

(b) Pintle bearing

The thickness of any liner or bush, in mm, is neither to be less than:

$$t = 0.01\sqrt{B}$$

where:
B = Relevant bearing force, in N

nor than the minimum thickness defined in 24.7.4(a) of this Chapter.

Table II 24-3
Allowable Surface Pressure, q_a

Bearing material	q_a (N/mm^2)
Lignum-vitae	2.5
White metal, oil lubricated	4.5
Synthetic material with hardness between 60 and 70 Shore D(1)	5.5(2)
Steel(3) and bronze and hot-pressed bronze-graphite materials	7.0

Notes:
(1) Indentation hardness test at 23°C and 50% moisture, according to a recognized standard. Synthetic bearing materials are to be of an approved type.
(2) Surface pressures exceeding 5.5 N/mm^2 may be accepted in accordance with bearing manufacturer's specification and tests, but in no case more than 10 N/mm^2.
(3) Stainless and wear-resistant steel in an approved combination with stock liner. Higher values than given in the Table may be taken if they are verified by tests.

24.8 Rudder Carriers

Suitable rudder carriers are to be provided according to the form and the weight of the rudder, and care is to be taken to provide efficient lubrication at the support.

24.9 Prevention of Jumping

A suitable arrangement is to be provided to prevent the rudder from jumping due to wave shocks.

24.10 Rudder Trunk

24.10.1 Materials, welding and connection to hull

This requirement applies to both trunk configurations (extending or not below stern frame).

The steel used for the rudder trunk is to be of weldable quality, with a carbon content not exceeding 0.23% on ladle analysis and a carbon equivalent C_{EQ} not exceeding 0.41.

Plating materials for rudder trunks are in general not to be of lower grades than corresponding to class II as defined in 1.5 of this Part.

The weld at the connection between the rudder trunk and the shell or the bottom of the skeg is to be full penetration.

The fillet shoulder radius r, in mm (see Fig. II 24-9 of this Chapter) is to be as large as practicable and to comply with the following formulae:

$r = 60$	mm	when $\sigma \geq 40 / K$	N/mm^2
$r = 0.1\ d_l$ without being less than 30	mm	when $\sigma < 40 / K$	N/mm^2

where:

d_c = Rudder stock diameter axis defined in 24.3.2 of this Chapter.
σ = Bending stress in the rudder trunk in N/mm^2.
K = Material factor as given in 1.5.2(a) or 1.5.2(c) of this Chapter respectively.

The radius may be obtained by grinding. If disk grinding is carried out, score marks are to be avoided in the direction of the weld. The radius is to be checked with a template for accuracy. Four profiles at least are to be checked. A report is to be submitted to the Surveyor.

Rudder trunks comprising of materials other than steel are to be specially considered by the Society.

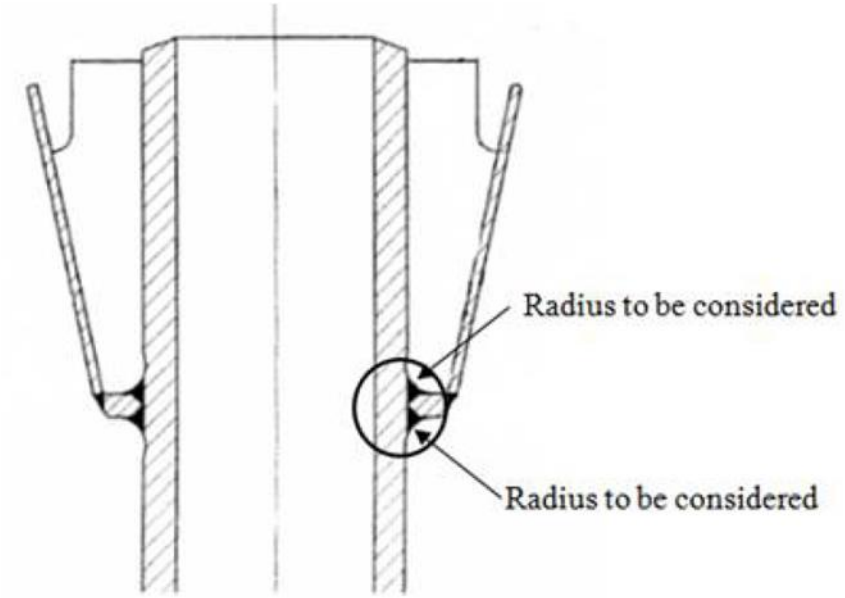

Fig. II 24-9
Fillet Shoulder Radius

24.10.2 Scantlings

Where the rudder stock is arranged in a trunk in such a way that the trunk is stressed by forces due to rudder action, the scantlings of the trunk are to be such that:

- the equivalent stress due to bending and shear does not exceed $0.35\ \sigma_F$,
- the bending stress on welded rudder trunk is to be in compliance with the following formula:

$$\sigma \leq \frac{80}{K} \quad N/mm^2$$

with:

σ = Bending stress in the rudder trunk, as defined in 24.10.1 of this Chapter
K = Material factor as given in 1.5.2(a) or 1.5.2(c) of this Chapter respectively, not to be taken less than 0.7
σ_F = Yield stress (N/mm^2) of material used

For calculation of bending stress, the span to be considered is the distance between the mid-height of the lower rudder stock bearing and the point where the trunk is clamped into the shell or the bottom of the skeg.

24.11 Guidelines for Calculating of Bending Moment and Shear Force Distribution

The evaluation of bending moments, shear forces and support forces for the system rudder–rudder stock may be carried out for some basic rudder types as outlined in IACS UR S10 Annex "Guidelines for calculation of bending moment and shear force distribution". Moments and forces on rudders of different types or shapes than those shown are to be calculated using alternative methods and will be considered based on submitted documents and calculations supporting the review.

Chapter 25

Equipment

25.1 General

25.1.1 All ships are to be provided with a complete equipment of the anchor, the chain, the towline and the mooring rope in accordance with the following requirements. The letter **E** will be placed after the symbol of classification of hull in the Register Book as **CR100 ✠ E**.

25.1.2 In the case of ships classed for a special or restricted service, if approved by the Society that requirements of the Rules are not necessary to apply, no equipment symbol is to be affixed.

25.1.3 The number and mass of anchors and the length and the size of the chain, the towline, and the mooring rope for a classed ship are to be determined from Table II 25-1. For ships having equipment numbers not more than 50 or more than 16,000, the number and mass of anchors, chain cables and mooring lines are to be determined by the Society.

25.1.4 Where 3 anchors are given in Table II 25-1, the third anchor is included as a spare bower anchor and is listed for guidance only, and is not required as a condition of classification.

25.1.5 The anchor, the chain, and the steel wire rope are to be tested and inspected in the presence of the Surveyor to the Society in accordance with the requirements of Part XI.

25.1.6 The anchoring equipment required herewith is intended for temporary mooring of a ship within a harbour or sheltered area when the ship is awaiting berth, tide, etc. Additional class notation **ADW** may be assigned to ships intended for regular anchoring at deep and unsheltered water, in accordance with 25.11.

25.2 Equipment Number

25.2.1 The equipment given in Table II 25-1 is based on the "Equipment Number", EN, which is to be calculated as follows:

$$EN = \Delta^{\frac{2}{3}} + 2BH + 0.1A$$

where:

Δ	=	Molded displacement to the summer load waterline, in ton.
B	=	Breadth of ship, in m, as specified in 1.2.2.
H	=	a + Σh, in m.
a	=	Vertical distance amidships from the summer load line to the top of uppermost continuous deck beam at side, in m.
Σh	=	Sum of the heights, in m, at centerline of superstructure and each tier of deck-houses having a breadth greater than 0.25B.
A	=	Sum of the profile area, in m^2, of the hull above summer load waterline, superstructures and deckhouses having a breadth greater than 0.25B, which are within the length of ship L.

(a) In calculation of H, sheer, camber and trim may be neglected. Where a deckhouse having a breadth greater than 0.25B is located above a deckhouse with a breadth of 0.25B or less, the wide deckhouse is to be included, but the narrow deckhouse ignored.

(b) Screens and bulwarks more than 1.5 m in height are to be regarded as parts of superstructure or deckhouse when calculating H and A. Where a screen or bulwark is of varying height, the portion exceeding 1.5 m in height is to be included.

(c) The total length of chain given in Table II 25-1 is to be divided in approximately equal parts between the two bower anchors.

25.2.2 Equipment for tug

For tugs, the term 2BH specified in 25.2.1 for calculating "Equipment Number", EN, is to be substituted by the following formula:

$2\,(a\,B + \Sigma\, h\, b)$

where:

a	=	As specified 25.2.1 of this Chapter.
B	=	As specified 25.2.1 of this Chapter.
h	=	As specified 25.2.1 of this Chapter.
b	=	The breadth, in m, of the superstructure or deckhouse of each tier having a breadth greater than 0.25B.

25.2.3 For dredgers of unrestricted service having normal ship shape of underwater part of the hull, bucket ladders and gallows are not to be included in calculating for the "Equipment Number".

25.2.4 Equipment for Offshore Service Units

The requirements herein are intended for temporary mooring of a unit within a harbor or other areas of sheltered water. The "Equipment Number" equation is based on 2.5 m/s current, 25 m/s wind and a scope of 6 through 10, the scope being the ratio of length of chain paid out to the water depth. Anchors and chains are to be in accordance with Table II 25-1 and the numbers, mass and sizes of these are to be regulated by the equipment number (EN) obtained from the following equation:

$$\text{Equipment Number} = hk\left(\frac{\Delta}{h}\right)^{\frac{2}{3}} + m\sum qC_sC_hA_f + n\sum qC_sC_hA_p$$

where:

k	=	1.0
m	=	2
n	=	0.1
h	=	Number of hulls or pontoons of the unit
Δ	=	Molded displacement of the unit in metric tons, excluding appendages, taken at the transit draft
$\sum qC_sC_hA_f$	=	Total frontal area exposed to the wind in m^2 at the transit draft
q	=	1.0 for hull, superstructure and deckhouses
	=	0.3 for other wind areas
C_s	=	Shape coefficient, as shown in Table III 13-1 of Part III of the Rules
C_h	=	Height coefficient as shown in Table III 13-2 of Part III of the Rules
A_f	=	Frontal projected area of each major element exposed to the wind, in m^2, including columns, upper structure, deck members, superstructures and deck houses, trusses, large cranes, derrick substructure and drilling derrick as well as the portion of the hull above the transit waterline, as applicable to the type of unit. Wind shielding in accordance with acceptable methods may be considered.
$\sum qC_sC_hA_p$	=	Total profile area exposed to the wind in m^2 at the transit draft
A_p	=	Profile area of each major element exposed to the wind, in m^2, including columns, upper structure, deck members, superstructure and deck houses, trusses, large cranes, derrick substructure and drilling derrick as well as the portion of the hull above the transit waterline, as applicable to the type of unit. Wind shielding in accordance with acceptable methods may be considered.

In calculating the wind areas, the following conditions are to be considered:

(a) Tiers of superstructures or deck houses having a breadth at any point no greater than 0.25B, where B is the molded breadth of the unit, may be excluded, provided that their projected area is less than 1/100 of the total projected area of the unit.

(b) Screens and bulwarks more than 1.5 m in height are to be included.

(c) In the case of units with columns, the projected areas of all columns are to be included (i.e. no shielding allowance is to be taken). However, a shape coefficient of 0.5 may be used for the column's cylindrical surfaces.

(d) The block projected area of a clustering of deck houses may be used in lieu of calculating each individual area. In this case, the shape coefficient is to be taken as 1.1.

(e) Large isolated structures such as cranes and derricks are to be calculated individually using the appropriate shape coefficients from Table III 13-1 of Part III of the Rules.

(f) Small isolated structures with a projected area less than 1/100 of the total projected area of the unit may be excluded.

(g) Open truss work commonly used for derrick towers, booms and certain types of masts may be approximated by taking 30% of the projected block areas of both the front and back sides (i.e., 60% of the projected block area of one side for double sided truss work). The shape coefficient is to be taken in accordance with Table III 13-1 of Part III of the Rules.

Note: Lateral wind areas (larger side) of open truss work in dual derrick towers may be approximated by taking 25% of the projected block areas of both the front and back sides. In all open truss derrick towers, the wind areas in the V-door levels may be approximated by taking 20% of the projected block areas of both the front and back sides.

Alternatively, the effective wind areas may be calculated by using the results of wind tunnel tests or recognized computational fluid dynamics (CFD) software with a representative model of the unit or designated item, including all the elements that can contribute to the wind resistance, and subjected to the wind conditions equivalent to 25 m/s or over. Documentation and calculations demonstrating the effective wind areas by the alternative methodology are to be submitted for review.

Note: When the effective wind areas are obtained from the results of wind tests or CFD analysis and the percentage of wind area related to hull, superstructures and deckhouses cannot be estimated, a value not less than 75% (frontal) and 50% (profile) of the resulting effective wind areas may be used in the equipment numeral equation in lieu of the total frontal area and the total profile area, respectively.

For mobile offshore units where the temporary mooring system is arranged to face the wind in a direction other than the bow of the unit, special consideration will be made to adapt the calculation of the Equipment Number and the required anchors and chains to the specific mooring conditions.

Units with **DPS-II** or **DPS-III** notation intended for deep water operations may be provided with a single bower anchor installed onboard and half of the chain cable length given in Table II 25-1. When a unit with single bower anchor arrangement is anchored for periods longer than 21 days, additional means of anchoring or external assistance such as a stand-by towing vessel will need to be provided and instructions in this regard are to be included in the Operating Manual.

Means are to be provided for stopping each cable as it is paid out, and the windlass should be capable of heaving in either cable.

The length of chain cable required by Table II 25-1 can be equally distributed between the two bower anchors connected and ready for use. Where the chain is arranged so that one anchor has a longer length for mooring it is to be verified that the windlass has sufficient capability for heaving in the longer length of chain.

Suitable arrangements are to be provided for securing the anchors and stowing the cables.

25.3 Anchors

25.3.1 Anchors are to be of stocked or stockless type of approved design and to be made in compliance with the requirements given in Chapter 12 of Part XI.

25.3.2 The mass of anchors given in Table II 25-1 is for the stockless type. Where the stocked anchor is used, the mass excluding the stock is to be 80% of the tabular mass for the stockless anchor.

25.3.3 The mass of each bower anchor given in Table II 25-1 is for anchors of equal mass. The mass of individual anchors may be ± 7% of the table mass provided that the total mass of all anchors is not less than that required for anchors of equal mass.

25.3.4 Where a special type of anchor with approved superior holding ability is used, the mass of the anchor less than the Table requirement, up to a maximum of 25% reduction for high holding power anchor and 50% for super high holding power anchors may be approved by the Society. However, supper high holding power anchor mass is not to exceed 1,500 kg.

25.3.5 For tugs with service restricted, when approved by the Society, the mass of bower anchor specified in Table II 25-1 may be reduced:

(a) to correspond to that required for equipment number 0.5EN for Protected Waters Service.

(b) to correspond to two Equipment numeral below that required for EN for other service restriction.

25.3.6 For ships in unsheltered water with depth up to 120 m, anchors should be of the stockless High Holding Power (HHP) type. The mass of the head of a stockless anchor given in Table II 25-2, including pins and fittings, should not be less than 60% of the total mass of the anchor. The material, construction and test performance of anchor shall meet the requirements of CR Rules Part XI Chapter 12.

25.4 Anchor Cables

25.4.1 Bower anchor cables are to be stud link chains of Grades E1, E2 or E3 corresponding to the nominal diameter of the chain and equipment number given in Table II 25-1. In the case of superior holding ability anchor, the Grade E1 chain is not to be used.

25.4.2 Stream anchor cables

(a) Stream anchor cables are to be of stud link chains, short link chains or steel wire ropes. When the steel wire rope is used, its construction is not to be less than 72 wires made up into 6 strands.

(b) The breaking strength of stream anchor cables corresponding to the construction and nominal diameter of cables as specified in relation to Chapters of Part XI is not to be less than that given in Table II 25-1.

25.4.3 Chains and steel wire ropes for anchors are to be made in compliance with the requirements given in Chapters 13 and 14 of Part XI respectively.

25.4.4 For tugs with service restricted, when approved by the Society, the diameter of chain cable required in Table II 25-1 may be reduced:

(a) to correspond to that required for equipment number 0.5EN for Protected Waters Service.

(b) to correspond to two Equipment numeral below that required for EN for other service restriction.

25.4.5 For tugs with service restriction of Protected Waters Service, the length of chain cable may be reduced to 50% of the requirement for equipment number 0.5EN in Table II 25-1.

25.4.6 For restricted services the use of steel wire rope may be accepted in place of chain cable at the discretion of the Society.

25.4.7 For ships in unsheltered water with depth up to 120 m, bower anchors should be associated with stud link chain cables of special (Grade 2) or extra special (Grade 3) quality. The total length of chain cable, as given in Table II 25-2 should be reasonably divided between the two bower anchors. For the proof and breaking loads of stud link chain cables reference is made to Chatper 13 Part XI, Table XI 13-3.

25.5 Towlines and Mooring Ropes

25.5.1 Material

(a) Towlines and mooring ropes may be of steel wires, natural fibre or synthetic fibre ropes. The breaking strength of the towline and the mooring rope is given in Table II 25-1.

(b) Irrespective of the breaking strength, the diameter of the fibre rope is not to be less than 20 mm.

(c) Where it is proposed to use the synthetic fibre rope, the size and construction are to be specially considered.

25.5.2 The length of the individual mooring rope may be reduced by 7% of the Table length, provided that the total length of the mooring rope is not less than that obtained from the Table.

25.5.3 Towlines are not be required as a condition of classification. The towlines listed in Table II 25-1 are intended as a guide.

25.5.4 Steel wire ropes used for the towline or mooring rope are to be of a flexible construction. Where wire ropes in construction of 6×12 and 6×24 are used, the diameter of the rope is not to be more than 25 mm and 33 mm respectively, however, the construction of 6×30 and 6×37, any diameter is permitted.

25.5.5 For ships having an A/EN ratio greater than 0.9, the number of mooring ropes given in Table II 25-1 is to be increased by the number given below:

A/EN Ratio	Increase No. of Mooring Rope
$1.1 \geq A/EN > 0.9$	1
$1.2 \geq A/EN > 1.1$	2
$A/EN > 1.2$	3

where:
A = The profile area defined in 25.2 of this Chapter.
EN = Equipment number determined by 25.2 of this Chapter.

25.5.6 It is the responsibility of the owner to replace or make good towlines and mooring ropes as opportunity occurs.

25.6 Arrangements for Working and Stowing of Anchors and Cables

25.6.1 The windlass is to be of substantial construction and sufficient power suitable for the size of the chain and the mass of the anchor and the chain.

25.6.2 The windlass is to be securely bolted to a substantial bed on the deck which is to be reinforced and suitably supported to the Surveyor's satisfaction.

25.6.3 Care is to be taken to ensure an easy lead of the cable from the windlass to the anchor and the chain locker.

25.6.4 Hawse pipe

(a) The hawse pipe is to be of ample strength and suitable size to house the anchor.

(b) The hawse pipe is to have substantial chafing lips and the easiest possible lead for minimizing the nip on the cable.

(c) The hawse pipe for the stockless anchor is to be provided with ample clearances to satisfy the Surveyor that there is no risk of the anchor jamming in the hawse pipe, when the anchor is shipped and unshipped.

25.6.5 The shell plating and framing in way of the hawse pipe are to be properly strengthened.

25.6.6 The hawse pipe, when in position, is to be thoroughly tested for watertightness by means of a hose in which the water pressure is not to be less than 0.2 MPa.

25.6.7 Chain locker

(a) The chain locker is to be divided into two parts of sufficient capacity for separate stowage of the port and starboard chain cables.

(b) The chain locker is to provide an easy direct lead for the chain cable into the hawse pipe when the total length of the chain cable is stowed.

(c) The chain locker is to have provisions for securing the inboard ends of the cable to the structure.

(d) Chain locker and chain pipe are to be watertight up to the weather deck. Chain pipes through which anchor cables are led are to be provided with closing appliances to minimize water ingress, such as steel plates with cutouts to accommodate chain links or canvas hood with a lashing arrangement that maintains the cover in the secured position.

(e) Where a means of access to chain pipes or cable lockers is located below the weather deck, the access cover and its securing arrangements are to be in accordance with recognized standards or equivalent for watertight manhole covers. Butterfly nuts and/or hinged bolts are prohibited as the securing mechanism for the access cover.

25.7 Emergency Towing Arrangements

25.7.1 Tankers, including oil tankers, chemical tankers and gas carriers, of 20,000 t deadweight and above are to be fitted with an emergency towing arrangement at both ends complying with Maritime Safety Committee Resolution MSC. 35(63) as amended. The forecastle or poop deck in way of strong points is to have a minimum thickness of 15 mm and is to be suitable reinforced to resist horizontal loads.

25.7.2 Emergency towing arrangements approved by the Society are classified into two types, one of which is 1,000 kN type and the other as 2,000 kN type corresponding to deadweight (DWT) of the ship.

(a) 50,000 tons > DWT ≥ 20,000 tons 1,000 kN type

(b) DWT ≥ 50,000 tons 2,000 kN type

25.7.3 Details of the structural arrangements and scantling in way of strong points are to be submitted for approval.

25.8 Emergency Towing Procedures

25.8.1 Ships are to be provided with a ship-specific emergency towing procedure that describes the towing procedure to be used in emergency situation.

25.8.2 The procedure specified in 25.8.1 is to be based on existing arrangements and equipment available on board the ship and is to include the following information:

(a) drawings of fore and aft deck showing possible emergency towing arrangements;

(b) inventory of equipment on board that can be used for emergency towing;

(c) means and methods of communication; and

(d) sample procedures to facilitate the preparation for and conducting of emergency towing operations.

25.9 Towing and Mooring Fittings

25.9.1 General

(a) The requirements in this section apply to shipboard fittings used for normal towing and normal mooring and their supporting hull structures.

(b) Ships are to be adequately provided with towing and mooring fittings.

(c) The scantlings of supporting structures are to be built at least with the gross scantlings obtained by adding the corrosion addition specified in 25.9.2(e) and 25.9.3(e) to the net scantlings obtained by applying the criteria specified in this section.

(d) The scantlings of supporting structures are to be in accordance with the relevant chapters or sections in addition to this section.

25.9.2 Towing Fittings

(a) Arrangement of Towing Fittings

(i) Towing fittings are to be located on longitudinals, beams or girders, which are parts of the deck construction so as to facilitate efficient distribution of the towing load.

(ii) When towing fittings cannot be located as specified in (i), towing fittings are to be arranged on reinforced members.

(b) Design Load

Design load, see Fig. II 25-1, for towing fittings and their supporting structures are to be as specified in (i) to (vi) below:

(i) For normal towing operations (e.g. harbour/manoeuvring), the design load on the line (see Fig. II 25-1) is to be 1.25 times the intended maximum towing load.

(ii) For other types of towing (e.g. escort), the design load on the line is to be the breaking strength of the towing line specified in Table II 25-1 according to the equipment number determined in 25.2 of this Chapter.

(iii) The design load on fittings is to take into account all acting loads.

(iv) The point where the towing force acts on towing fittings is to be taken as the attachment point of the towing line.

(v) The design load on fittings is to take into account the total design load on the line specified in (i) and (ii), but need not exceed twice the design load on the line.

(vi) If the design load on fittings specified in (ii) to (v) is less than the intended towing load stipulated in the construction specifications for the towing fittings and their supporting structures used for towing operations specified in (ii), the design load on fittings is to be not less than the intended towing load.

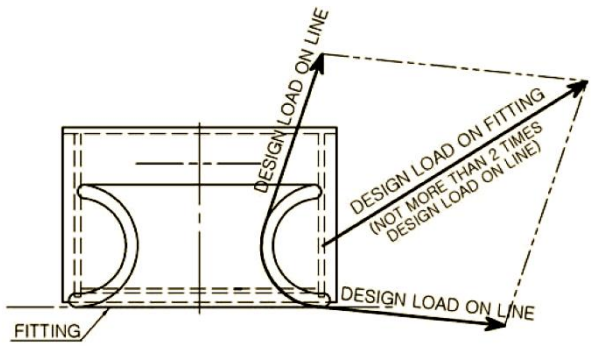

Fig. II 25-1
Design load

(c) Selection of Towing Fittings

Towing fittings are generally to be specified according to standards approved by the Society.

(d) Allowable stresses of supporting structures are not to be more than below:

(i) Normal stress: 100% of the specified yield point for the material used

(ii) Shearing stress: 60% of the specified yield point for the material used

(e) The corrosion addition of supporting structures is not to be less than the following values:

(i) IACS Common Structural Rules, if applicable.

(ii) The value will be considered by the Society, but is not to be less than 2 mm.

(f) Safe Working Load (SWL)

(i) For towing fittings and their supporting structures used for towing operations specified in (b)(i), the SWL is not to exceed 80% of the design load on fittings specified in (b)(i), (iii), (iv), and (v).

(ii) For towing fittings and their supporting structures used for towing operations specified in (b)(ii), the SWL is not to exceed the design load on fittings specified in (b)(ii) to (vi).

(iii) For towing fittings and their supporting structures used for towing operations specified in both (b)(i) and (b)(ii), the SWL is not to exceed the greater of the design loads.

(iv) The SWL of each fitting is to be marked by weld beads or equivalent on the fitting.

25.9.3 Mooring Fittings

(a) Arrangement of Mooring Fittings

(i) Mooring fittings are to be located on longitudinals, beams or girders, which are parts of the deck construction so as to facilitate efficient distribution of the mooring load.

(ii) When mooring fittings cannot be located as specified in (i), the mooring fittings are to be arranged on reinforced members.

(b) Design Load

Design load, see Fig. II 25-1, for mooring fittings and their supporting structures are to be as specified in (i) to (vii) below:

(i) The minimum design load on the line (see Fig. II 25-1) is to be 1.15 times the breaking strength of the mooring line specified in Table II 25-1 according to the equipment number determined in 25.2.

(ii) The design load on fittings is to take into account all acting loads.

(iii) The point where the mooring force acts on mooring fittings is to be taken as the attachment point of the mooring line.

(iv) The design load on fittings is to take into account the total design load on the line specified in (i) (see Fig. II 25-1), but need not exceed twice the design load on the line.

(v) If the design load on fittings specified in (i) to (iv) is less than 1.25 times the intended mooring load stipulated in the construction specifications for the mooring fittings and their supporting structures used for mooring operations specified in (i), the design load on the fittings is to be at least 1.25 times the intended mooring load.

(vi) The design load applied to supporting hull structures for mooring winches is to be 1.25 times the intended maximum brake holding load.

(vii) The design load applied to supporting hull structures for capstans is to be 1.25 times the intended maximum hauling-in force.

(viii) If not otherwise specified by IACS Recommendation No. 10 "Anchoring, Mooring and Towing Equipment", side projected area including that of deck cargoes as given by the loading manual is to be taken into account for selection of mooring lines and the loads applied to shipboard fittings and supporting hull structure.

(ix) The increase of the minimum breaking strength for synthetic ropes according to IACS Recommendation No. 10 needs not to be taken into account for the loads applied to shipboard fittings and supporting hull structure.

(c) Selection of Mooring Fittings

Mooring fittings are generally to be specified according to standards approved by the Society.

(d) Allowable stresses of supporting structures are not to be more than below:

(i) Normal stress: 100% of the specified yield point for the material used

(ii) Shearing stress: 60% of the specified yield point for the material used

(e) The corrosion addition of supporting structures is not to be less than the following values:

(i) IACS Common Structural Rules, if applicable.

(ii) The value will be considered by the Society, but is not to be less than 2 mm

(f) Safe Working Load (SWL)

(i) The SWL is not to exceed 80% of the design load on fittings specified in (b)(i) to (v) or the design load specified in (b)(vi) or (vii).

(ii) The SWL of each fitting, excluding mooring winches and capstan, is to be marked by weld beads or equivalent on the fitting.

25.10 Towing and Mooring Arrangements Plan

25.10.1 The SWL for the intended use for each shipboard fitting should be noted in the towing and mooring arrangements plan available on board for the guidance of the Master.

25.10.2 Information provided on the plan should include in respect of each shipboard fitting:

(a) location on the ship

(b) fitting type

(c) SWL

(d) purpose (mooring/harbour towing/escort towing)

(e) method of applying load of towing or mooring line including limiting fleet angles.

25.11 Anchoring in Deep and Unsheltered Water - ADW

25.11.1 Class notations **ADW**

Ships built in compliance with the requirements as specified in 25.11 will be assigned the additional notation related to anchoring in deep and unsheltered waters.

Note:

If the intended service of the ship is such that frequent anchoring in open sea is expected, it is advised that the size of anchors and chains is increased above the rule requirements, taking into account the dynamic forces imposed by the ship moving in heavy seas.

25.11.2 General

(a) The purpose of the additional class notation **ADW** is to demonstrate the ships capability for anchoring in deep and unsheltered waters.

(b) The scope of the additional class notation **ADW** is to provide requirements for the anchoring equipment for ships intended to anchor in deep and unsheltered water.

(c) The additional class notation **ADW** indicates that the ship is designed to anchor in deep and unsheltered water. Assumed conditions are as follows:

— water depth up to 120 m

— current up to 1.54 m/s

— wind up to 14 m/s

— waves with significant height of up to 3 m

— wind, current, and waves from ahead and acting in the same direction.

Furthermore, these requirements are applicable to ships of length as specified in 1.2.1 of this Part not less than 135 m.

25.11.3 Equipment Number for deep and unsheltered water

Anchors and chain cables should be in accordance with Table II 25-2 and based on the Equipment Number EN_1 obtained from the following equation:

$$EN_1 = 0.628\left[a\left(\frac{EN}{0.628}\right)^{1/2.3} + b(1-a)\right]^{2.3}$$

where

a = $1.83\cdot10^{-9}\cdot L^3 + 2.09\cdot10^{-6}\cdot L^2 - 6.21\cdot10^{-4}\cdot L + 0.0866$

b = $0.156\cdot L + 8.372$

L = the length of ship as specified in 1.2.1 of this Part

EN = Equipment Number calculated in compliance with 25.2.1.

25.11.4 Anchors and Chain cables for bower anchors

For requirements of anchors and bower anchor chain cables, see 25.3 and 25.4 of this Chapter.

25.11.5 Anchor windlass and chain stopper

The windlass unit prime mover should be able to supply for at least 30 minutes a continuous duty pull Z_{cont}, in N, given by:

$$Z_{cont} = 35\,d^2 + 13.4\,m_A$$

where

d = chain diameter, in mm, as per Table II 25-2

m_A = HHP anchor mass, in kg, as per Table II 25-2

As far as practicable, for testing purpose the speed of the chain cable during hoisting of the anchor and cable should be measured over 37.5 m of chain cable and initially with at least 120 m of chain and the anchor submerged and hanging free. The mean speed of the chain cable during hoisting of the anchor from the depth of 120 m to the depth of 82.5 m should be at least 4.5 m/min.

Table II 25-1
Anchor, Chain Cable and Ropes

Equipment number		Equipment numeral	Bower anchor		Stream anchor		Stud link chain cable for bower anchors				Wire rope or chain for stream anchor		Tow line (1 length per ship)		Mooring ropes		
			Number	Mass per anchor	Number	Mass per anchor	Total length	Nominal diameter (mm)			Length	Breaking strength	Length	Breaking Strength	Number	Length of each rope	Breaking strength
Over	Up to			kg		kg	m	Grade E1	Grade E2	Grade E3	m	kN	m	KN		m	kN
50	70	E51	2	180	1	60	220	14	12.5		80	65	180	98	3	80	34
70	90	E52	2	240	1	80	220	16	14		85	74	180	98	3	100	37
90	110	E53	2	300	1	100	247.5	17.5	16		85	81	180	98	3	110	39
110	130	E54	2	360	1	120	247.5	19	17.5		90	89	180	98	3	110	44
130	150	E55	2	420	1	140	275	20.5	17.5		90	98	180	98	3	120	49
150	175	E56	2	480	1	165	275	22	19		90	108	180	98	3	120	54
175	205	E57	2	570	1	190	302.5	24	20.5		90	118	180	112	3	120	59
205	240	E58	2	660			302.5	26	22	20.5			180	129	4	120	64
240	280	E59	2	780			330	28	24	22			180	150	4	120	69
280	320	E60	2	900			357.5	30	26	24			180	174	4	140	74
320	360	E61	2	1020			357.5	32	28	24			180	207	4	140	78
360	400	E62	2	1140			385	34	30	26			180	224	4	140	88
400	450	E63	2	1290			385	36	32	28			180	250	4	140	98
450	500	E64	2	1440			412.5	38	34	30			180	277	4	140	108
500	550	E65	2	1590			412.5	40	34	30			190	306	4	160	123
550	600	E66	2	1740			440	42	36	32			190	338	4	160	133
600	660	E67	2	1920			440	44	38	34			190	371	4	160	147
660	720	E68	2	2100			440	46	40	36			190	406	4	160	157
720	780	E69	2	2280			467.5	48	42	36			190	441	4	170	172
780	840	E70	2	2460			467.5	50	44	38			190	480	4	170	186
840	910	E71	2	2640			467.5	52	46	40			190	518	4	170	201
910	980	E72	2	2850			495	54	48	42			190	559	4	170	216
980	1060	E73	2	3060			495	56	50	44			200	603	4	180	230
1060	1140	E74	2	3300			495	58	50	46			200	647	4	180	250
1140	1220	E75	2	3540			522.5	60	52	46			200	691	4	180	270
1220	1300	E76	2	3780			522.5	62	54	48			200	738	4	180	284
1300	1390	E77	2	4050			522.5	64	56	50			200	786	4	180	309
1390	1480	E78	2	4320			550	66	58	50			200	836	4	180	324
1480	1570	E79	2	4590			550	68	60	52			220	888	5	190	324
1570	1670	E80	2	4890			550	70	62	54			220	941	5	190	333
1670	1790	E81	2	5250			577.5	73	64	56			220	1024	5	190	353
1790	1930	E82	2	5610			577.5	76	66	58			220	1109	5	190	378
1930	2080	E83	2	6000			577.5	78	68	60			220	1168	5	190	402
2080	2230	E84	2	6450			605	81	70	62			240	1259	5	200	422

Table II 25-1
Anchor, Chain Cable and Ropes (continued)

Equipment number		Equipment numeral	Bower anchor		Stream anchor		Stud link chain cable for bower anchors				Wire rope or chain for stream anchor		Tow line (1 length per ship)		Mooring ropes		
			Number	Mass per anchor	Number	Mass per anchor	Total length	Nominal diameter (mm)			Length	Breaking strength	Length	Breaking strength	Number	Length of each rope	Breaking strength
Over	Up to			kg		kg	m	Grade E1	Grade E2	Grade E3	m	kN	m	kN		m	kN
2230	2380	E85	2	6900			605	84	73	64			240	1356	5	200	451
2380	2530	E86	2	7350			605	87	76	66			240	1453	5	200	480
2530	2700	E87	2	7800			632.5	90	78	68			260	1471	6	200	480
2700	2870	E88	2	8300			632.5	92	81	70			260	1471	6	200	490
2870	3040	E89	2	8700			632.5	95	84	73			260	1471	6	200	500
3040	3210	E90	2	9300			660	97	84	76			280	1471	6	200	520
3210	3400	E91	2	9900			660	100	87	78			280	1471	6	200	554
3400	3600	E92	2	10500			660	102	90	78			280	1471	6	200	588
3600	3800	E93	2	11100			687.5	105	92	81			300	1471	6	200	618
3800	4000	E94	2	11700			687.5	107	95	84			300	1471	6	200	647
4000	4200	E95	2	12300			687.5	111	97	87			300	1471	7	200	647
4200	4400	E96	2	12900			715	114	100	87			300	1471	7	200	657
4400	4600	E97	2	13500			715	117	102	90			300	1471	7	200	667
4600	4800	E98	2	14100			715	120	105	92			300	1471	7	200	677
4800	5000	E99	2	14700			742.5	122	107	95			300	1471	7	200	686
5000	5200	E100	2	15400			742.5	124	111	97			300	1471	8	200	686
5200	5500	E101	2	16100			742.5	127	111	97			300	1471	8	200	696
5500	5800	E102	2	16900			742.5	130	114	100			300	1471	8	200	706
5800	6100	E103	2	17800			742.5	132	117	102			300	1471	9	200	706
6100	6500	E104	2	18800			742.5		120	107					9	200	716
6500	6900	E105	2	20000			770		124	111					9	200	726
6900	7400	E106	2	21500			770		127	114					10	200	726
7400	7900	E107	2	23000			770		132	117					11	200	726
7900	8400	E108	2	24500			770		137	122					11	200	735
8400	8900	E109	2	26000			770		142	127					12	200	735
8900	9400	E110	2	27500			770		147	132					13	200	735
9400	10000	E111	2	29000			770		152	132					14	200	735
10000	10700	E112	2	31000			770			137					15	200	735
10700	11500	E113	2	33000			770			142					16	200	735
11500	12400	E114	2	35500			770			147					17	200	735
12400	13400	E115	2	38500			770			152					18	200	735
13400	14600	E116	2	42000			770			157					19	200	735
14600	16000	E117	2	46000			770			162					21	200	735

Table II 25-2
Anchoring Equipment for Ships in Unsheltered Water with Depth up to 120 m

Equipment Number EN_1		High Holding Power stockless bower anchors		Stud link chain cable for bower anchors		
Equal to or greater than	Less than	Number	Mass per anchor (m_A) (kg)	Total length (m)	Min. dia.(d) Special quality (Grade 2) (mm)	Min. dia.(d) Extra speical quality (Grade 3) (mm)
	1790	2	14150	1017.5	105	84
1790	1930	2	14400	990	105	84
1930	2080	2	14800	990	105	84
2080	2230	2	15200	990	105	84
2230	2530	2	16000	990	105	84
2530	2700	2	16300	990	105	84
2700	2870	2	16700	990	105	84
2870	3040	2	17000	990	105	84
3040	3210	2	17600	990	105	84
3210	3400	2	18000	990	105	84
3400	3600	2	18300	990	106	84
3600	3800	2	19000	990	107	85
3800	4000	2	19700	962.5	108	87
4000	4200	2	20300	962.5	111	90
4200	4400	2	21100	962.5	114	92
4400	4600	2	22000	962.5	117	95
4600	4800	2	22900	962.5	119	97
4800	5000	2	23500	962.5	122	99
5000	5200	2	24000	935	125	102
5200	5500	2	24500	907.5	130	105
5500	5800	2	25000	907.5	133	107
5800	6100	2	25500	880	137	111
6100	6500	2	25700	880	140	113
6500	6900	2	26000	852.5	143	115
6900	7400	2	26500	852.5	147	118
7400	7900	2	27000	825	152	121
7900	8400	2	27500	825	154	123
8400	8900	2	28000	797.5	158	127
8900	9400	2	28900	770	162	132
9400	10000	2	29400	770	-	135
10000	10700	2	29900	770	-	139
10700	11500	2	30600	770	-	143
11500	12400	2	31500	770	-	147
12400	13400	2	33200	770	-	152
13400	14600	2	35000	770	-	157
14600		2	38000	770	-	162

Chapter 26

Navigation Bridge Visibility

26.1 General

The requirements in this Chapter apply to ships of not less than 55 m in length overall (L_{OA}).

26.2 View of the Sea Surface

The view of the sea surface from the conning position shall not be obscured by more than two ship length overall or 500 m, whichever is less, forward of the bow to 10° on either side under all conditions of the ship's draught, trim and deck cargo.

26.3 Blind Sectors

Each blind sector caused by cargo, cargo gear or other obstructions outside of the wheelhouse forward of the beam obstructing the view of the sea surface as seen from the conning position is not to exceed 10°. The total arc of blind sectors shall not exceed 20°. The clear sectors between blind sectors shall be at least 5°. However, in the view described in 26.2, each individual blind sector shall not exceed 5°.

26.4 Horizontal Field of Vision

26.4.1 The horizontal field of vision from the conning position is to extend over an arc of not less than 225°, that is from more than 22.5° abaft the beam on one side, through forward, to more than 22.5° abaft the beam on the other side.

26.4.2 From each bridge wing the horizontal field of vision is to extend over an arc from at least 45° on the opposite bow through right ahead and then aft to 180° from dead ahead.

26.4.3 From main steering position the horizontal field of vision is to extend over an arc from right ahead to at least 60° on each side.

26.5 Ship's Side

The ship's side is to be visible from the bridge wing. The arrangement of bridge may refer to IMO MSC.1/Circ. 1350.

26.6 Bridge Front Windows

26.6.1 The height of the lower edge of bridge front windows above the deck is to be kept as low as possible.

26.6.2 The upper edge of the bridge front windows is to allow a forward view of the horizon when the ship is pitching in heavy seas for a person with an eye height of 1800 mm above bridge deck at the conning position. The Society, if satisfied that a 1800 mm height of eye is unreasonable and impractical, may allow reduction of the height of eye but not to less than 1600 mm.

26.6.3 To help avoid reflections, the bridge front windows are to be inclined from the vertical plane top out, at an angle of not less than 10° and not more than 25°.

26.6.4 At all times, regardless of weather conditions, at least two of the bridge front windows are to provide a clear view and, depending on the bridge layout, an additional number of clear view windows are to be provided.

26.7 Windows

26.7.1 Framing between bridge windows is to be kept to minimum and is not to be installed immediately forward of any workstation.

26.7.2 Polarized and tinted windows are not to be fitted.

26.8 Ships of Unconventional Design

26.8.1 With ships of unconventional design which, in the opinion of the Society, the arrangements are to be provided to achieve a level of visibility that is as near as practical to those prescribed in this Chapter.

26.9 Navigation Bridge Visibility during Ballast Water Exchange

26.9.1 During the intermediate stages of ballast water exchange, navigation bridge visibility need not comply with 26.2 and 26.4.

Chapter 27

Strength and Securing of Small Hatches, Fore Deck Fittings and Equipment on the Exposed Fore Deck

27.1 General

27.1.1 This Chapter provides strength requirements to resist green sea forces for the small hatches and securing devices fitted on the exposed fore deck, air pipes, ventilator pipes and their closing devices, and the securing of windlasses located within the forward quarter length.

27.1.2 Small hatches in these requirements are hatches designed for access to spaces below the deck and are capable of being closed weather-tight or watertight, as applicable. Their opening is normally 2.5 m^2 or less.

27.1.3 Hatches designed for use of emergency escape are to comply with these requirements, except 27.4.2(a)(i) and (ii), 27.4.3(c) and 27.4.4.

27.1.4 For windlasses, these requirements are additional to those appertaining to the anchor and chain performance criteria of the Society.

27.1.5 Where mooring winches are integral with the anchor windlass, they are to be considered as part of the windlass.

27.2 Application

27.2.1 For ships that are contracted for construction on or after 1 January 2004 on the exposed deck over the forward 0.25L, applicable to:

All ship types of sea going service of length 80 m or more, where the height of the exposed deck in way of the item is less than 0.1L or 22 m above the summer load waterline, whichever is the lesser.

27.2.2 For ships that are contracted for construction prior to 1 January 2004 only for hatches, air pipes, ventilator pipes and their closing devices on the exposed deck giving access to or serving spaces forward of the collision bulkhead, and to spaces which extend over this line aft-wards, applicable to:

Bulk carriers, ore carriers, combination carriers (e.g. OBO ships, Ore/Oil Carriers, etc.) and general dry cargo ships (excluding container vessels, vehicle carriers, Ro-Ro ships and woodchip carriers), of length 100 m or more.

27.2.3 The ship length L is as defined in 1.2.1.

27.3 Implementation

27.3.1 Ships that are described in 27.2.1 that are contracted for construction on or after 1 January 2004 are to comply by the time of delivery.

27.3.2 Ships described in 27.2.2 that are contracted for construction prior to 1 January 2004 are to comply:

(a) for ships which will be 15 years of age or more on 1 January 2004 by the due date of the first intermediate or special survey after that date;

(b) for ships which will be 10 years of age or more on 1 January 2004 by the due date of the first special survey after that date;

(c) for ships which will be less than 10 years of age on 1 January 2004 by the date on which the ship reaches 10 years of age.

Completion prior to 1 January 2004 of an intermediate or special survey with a due date after 1 January 2004 cannot be used to postpone compliance.

However, completion prior to 1 January 2004 of an intermediate survey the window for which straddles 1 January 2004 can be accepted.

27.4 Small Hatches

27.4.1 Strength

(a) For small rectangular steel hatch covers, the plate thickness, stiffener arrangement and scantlings are to be in accordance with Table II 27-1, and Fig. II 27-1. Stiffeners, where fitted, are to be aligned with the metal-to-metal contact points, required in 27.4.3(a), see Fig. II 27-1. Primary stiffeners are to be continuous. All stiffeners are to be welded to the inner edge stiffener, see Fig. II 27-2.

(b) The upper edge of the hatchway coamings is to be suitably reinforced by a horizontal section, normally not more than 170 to 190 mm from the upper edge of the coamings.

(c) For small hatch covers of circular or similar shape, the cover plate thickness and reinforcement is to provide strength and stiffness equivalent to the requirements for small rectangular hatches specified in 27.4.

(d) For small hatch covers constructed of materials other than steel, the required scantlings are to provide equivalent strength.

27.4.2 Primary securing devices

(a) Small hatches located on exposed fore deck subject to the application of these requirements are to be fitted with primary securing devices such that their hatch covers can be secured in place and weather-tight by means of a mechanism employing any one of the following methods:
   (i) Butterfly nuts tightening onto forks (clamps),
   (ii) Quick acting cleats, or
   (iii) Central locking device.

(b) Dogs (twist tightening handles) with wedges are not acceptable.

27.4.3 Requirements for primary securing

(a) The hatch cover is to be fitted with a gasket of elastic material. This is to be designed to allow a metal to metal contact at a designed compression and to prevent over compression of the gasket by green sea forces that may cause the securing devices to be loosened or dislodged. The metal-to-metal contacts are to be arranged close to each securing device in accordance with Fig. II 27-1, and of sufficient capacity to withstand the bearing force.

(b) The primary securing method is to be designed and manufactured such that the designed compression pressure is achieved by one person without the need of any tools.

(c) For a primary securing method using butterfly nuts, the forks (clamps) are to be of robust design. They are to be designed to minimize the risk of butterfly nuts being dislodged while in use; by means of curving the forks upward, a raised surface on the free end, or a similar method. The plate thickness of unstiffened steel forks is not to be less than 16 mm. An example arrangement is shown in Fig. II 27-2.

(d) For small hatch covers located on the exposed deck forward of the fore-most cargo hatch, the hinges are to be fitted such that the predominant direction of green sea will cause the cover to close, which means that the hinges are normally to be located on the fore edge.

(e) On small hatches located between the main hatches, for example between Nos. 1 and 2, the hinges are to be placed on the fore edge or outboard edge, whichever is practicable for protection from green water in beam sea and bow quartering conditions.

27.4.4 Secondary securing device

Small hatches on the fore deck are to be fitted with an independent secondary securing device e.g. by means of a sliding bolt, a hasp or a backing bar of slack fit, which is capable of keeping the hatch cover in place, even in the event that the primary securing device became loosened or dislodged. It is to be fitted on the side opposite to the hatch cover hinges.

Table II 27-1
Scantlings for Small Steel Hatch Covers on the Fore Deck

Nominal size (mm × mm)	Cover plate thickness (mm)	Primary stiffeners	Secondary stiffeners
		Flat Bar(mm × mm); number	
630 × 630	8	-	-
630 × 830	8	100 × 8 ; 1	-
830 × 630	8	100 × 8 ; 1	-
830 × 830	8	100 × 10 ; 1	-
1030 × 1030	8	120 × 12 ; 1	80 × 8 ; 2
1330 × 1330	8	150 × 12 ; 2	100 × 10 ; 2

27.5 Fore Deck Fittings and Equipment

27.5.1 Applied loading

(a) Air pipes, ventilator pipes and their closing devices

(i) The pressures p, in kN/m^2 acting on air pipes, ventilator pipes and their closing devices may be calculated from:

$$p = 0.5\rho V^2 C_d C_s C_p$$

where:

ρ = Density of sea water (1.025 t/m^3).
V = Velocity of water over the fore deck (13.5 m/sec).
C_d = Shape coefficient,
= 0.5 for pipes,
= 1.3 for air pipe or ventilator heads in general,
= 0.8 for an air pipe or ventilator head of cylindrical form with its axis in the vertical direction.
C_s = Slamming coefficient (3.2).
C_p = Protection coefficient,
= 0.7 for pipes and ventilator heads located immediately behind a breakwater or forecastle,
= 1.0 elsewhere and immediately behind a bulwark.

(ii) Forces acting in the horizontal direction on the pipe and its closing device may be calculated from 27.5.1(a)(i) using the largest projected area of each component.

(b) Windlasses

(i) The following pressures and associated areas are to be applied (see Fig. II 27-3):

(1) 200 kN/m^2 normal to the shaft axis and away from the forward perpendicular, over the projected area in this direction,

(2) 150 kN/m^2 parallel to the shaft axis and acting both inboard and outboard separately, over the multiple of f times the projected area in this direction, where f is defined as:

f = 1+ B/H , but not greater than 2.5.

where:

B = Width of windlass measured parallel to the shaft axis.
H = Overall height of windlass.

(ii) Forces in the bolts, chocks and stoppers securing the windlass to the deck are to be calculated. The windlass is supported by N bolt groups, each containing one or more bolts, see Fig. II 27-4.

(iii) The axial force R_i in bolt group (or bolt) i, positive in tension, may be calculated from:

$$R_{xi} = \frac{P_x h x_i A_i}{I_x}$$
$$R_{yi} = \frac{P_y h y_i A_i}{I_y}$$
$$R_i = R_{xi} + R_{yi} - R_{si}$$

where:

P_x = Force (kN) acting normal to the shaft axis,
P_y = Force (kN) acting parallel to the shaft axis, either inboard or outboard whichever gives the greater force in bolt group i,
h = Shaft height (cm) above the windlass mounting,
x_i, y_i = x and y coordinates of bolt group i from the centroid of all N bolt groups, positive in the direction opposite to that of the applied force (cm),
A_i = Cross sectional area (cm^2) of all bolts in group i,
I_x = $\Sigma A_i x_i^2$ for N bolt groups,
I_y = $\Sigma A_i y_i^2$ for N bolt groups,
R_{si} = Static reaction at bolt group i, due to weight of windlass.

(iv) Shear forces F_{xi}, F_{yi} applied to the bolt group i, and the resultant combined force F_i may be calculated from:

$$F_{xi} = \frac{P_x - \alpha g M}{N}$$
$$F_{yi} = \frac{P_y - \alpha g M}{N} \text{ and}$$
$$F_i = \left(F_{xi}^2 + F_{yi}^2\right)^{0.5}$$

where:

α = Coefficient of friction (0.5),
M = Mass of windlass (t),
g = Gravity acceleration (9.81 m/sec^2),
N = Number of bolt groups.

(v) Axial tensile and compressive forces in 27.5.1(b)(iii) and lateral forces in 27.5.1(b)(iv) are also to be considered in the design of the supporting structure.

27.5.2 Strength requirements

(a) Air pipes, ventilator pipes and their closing devices

(i) Bending moments and stresses in air and ventilator pipes are to be calculated at critical positions: at penetration pieces, at weld or flange connections, at toes of supporting brackets. Bending stresses in the net section are not to exceed 0.8 σ_y, where σ_y is the specified minimum yield stress or 0.2% proof stress of the steel at room temperature. Irrespective of corrosion protection, a corrosion addition to the net section of 2.0 mm is then to be applied.

(ii) For standard air pipes of 760 mm height closed by heads of not more than the tabulated projected area, pipe thicknesses and bracket heights are specified in Table II 27-2. Where brackets are required, 3 or more radial brackets are to be fitted. Brackets are to be of gross thickness 8 mm or more, of minimum length 100 mm, and height according to Table II 27-2 but need not extend over the joint flange for the head. Bracket toes at the deck are to be suitably supported.

(iii) For other configurations, loads according to 27.5.1(a) are to be applied, and means of support determined in order to comply with the requirements of 27.5.2(a)(i). Brackets, where fitted, are to be of suitable thickness and length according to their height. Pipe thickness is not to be taken less than as required in 21.1.

(iv) For standard ventilators of 900 mm height closed by heads of not more than the tabulated projected area, pipe thicknesses and bracket heights are specified in Table II 27-3. Brackets, where required are to be as specified in 27.5.2(a)(ii).

(v) For ventilators of height greater than 900 mm, brackets or alternative means of support are to be fitted according to the requirements of 27.5.2(a)(i) above. Brackets, where fitted, whose thickness and length are to be suitable for their height. Pipe thickness is not to be taken less than as required in 21.1.

(vi) All component parts and connections of the air pipe or ventilator are to be capable of withstanding the loads defined in 27.5.1(a).

(vii) Rotating type mushroom ventilator heads are unsuitable for application in the areas defined in 27.2.

(b) Windlass mounts

(i) Tensile axial stresses in the individual bolts in each bolt group i are to be calculated. The horizontal forces F_{xi} and F_{yi} are normally to be reacted by shear chocks. Where "fitted" bolts are designed to support these shear forces in one or both directions, the von Mises equivalent stresses in the individual bolts are to be calculated, and compared to the stress under proof load. Where pourable resins are incorporated in the holding down arrangements, due account is to be taken in the calculations. The safety factor against bolt proof strength is to be not less than 2.0.

(ii) The stresses of above deck framing and hull structure supporting the windlass and its securing bolt loads are not to exceed the following values:

Bending stress: 85% of the yield strength of the material.
Shearing stress: 60% of the yield strength of the material.

Table II 27-2
760 mm Air Pipe Thickness and Bracket Standards

Nominal pipe diameter (mm)	Minimum fitted gross thickness, (mm)	Maximum projected area of head (cm^2)	Height(1) of brackets (mm)
40A(3)	6.0	-	520
50A(3)	6.0	-	520
65A	6.0	-	480
80A	6.3	-	460
100A	7.0	-	380
125A	7.8	-	300
150A	8.5	-	300
175A	8.5	-	300
200A	8.5(2)	1900	300(2)
250A	8.5(2)	2500	300(2)
300A	8.5(2)	3200	300(2)
350A	8.5(2)	3800	300(2)
400A	8.5(2)	4500	300(2)

(1) (see 27.5.2(a)(ii)) need not extend over the joint flange for the head.

(2) Brackets are required where the as fitted (gross) thickness is less than 10.5 mm, or where the tabulated projected head area is exceeded.

(3) Not permitted for new ships.

Note: For other air pipe heights, the relevant requirements of 27.5.2 are to be applied.

Table II 27-3
900 mm Ventilator Pipe Thickness and Bracket Standards

Nominal pipe diameter (mm)	Minimum fitted gross thickness, (mm)	Maximum projected area of head (cm^2)	Height of brackets (mm)
80A	6.3	-	460
100A	7.0	-	380
150A	8.5	-	300
200A	8.5	550	-
250A	8.5	880	-
300A	8.5	1200	-
350A	8.5	2000	-
400A	8.5	2700	-
450A	8.5	3300	-
500A	8.5	4000	-

Note: For other ventilator heights, the relevant requirements of 27.5.2 are to be applied.

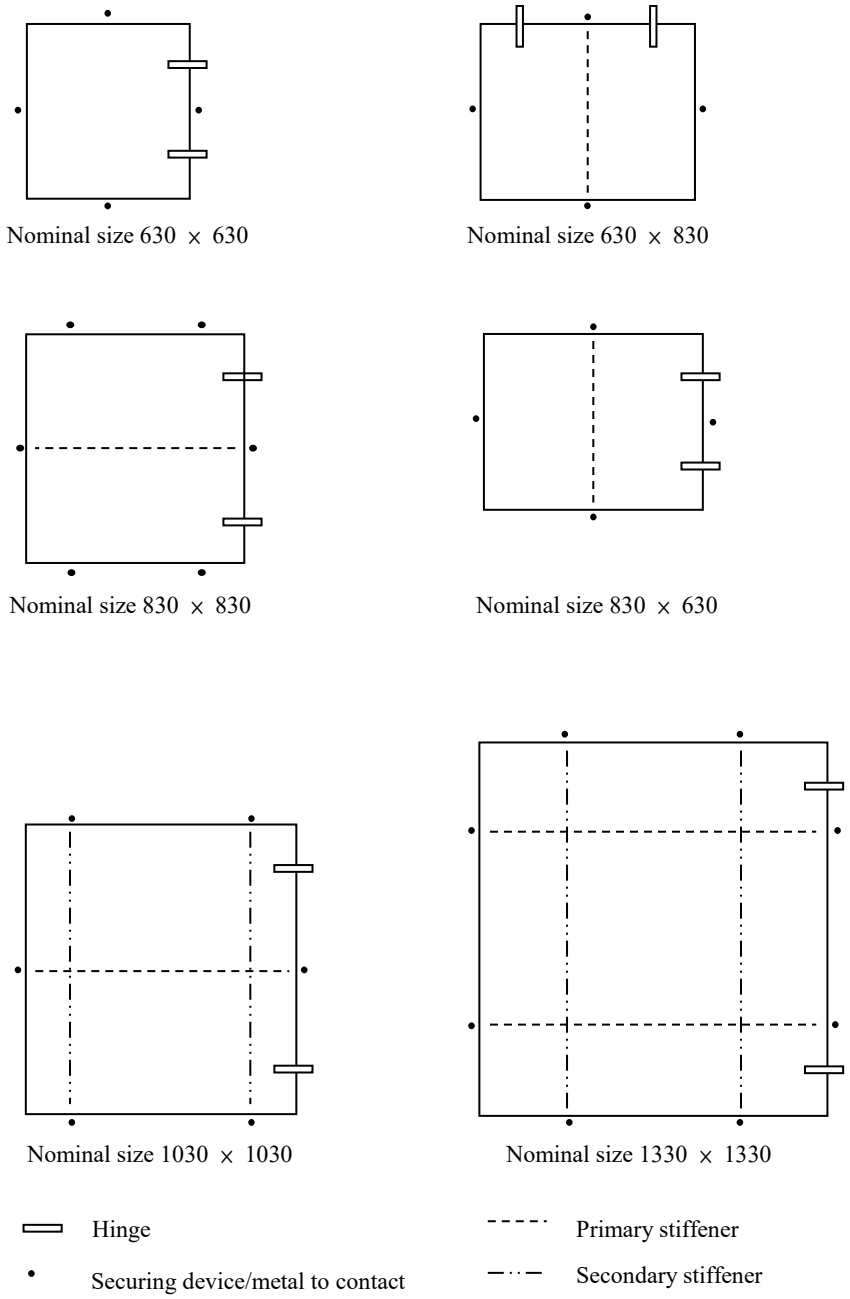

Fig. II 27-1
Arrangement of Stiffeners

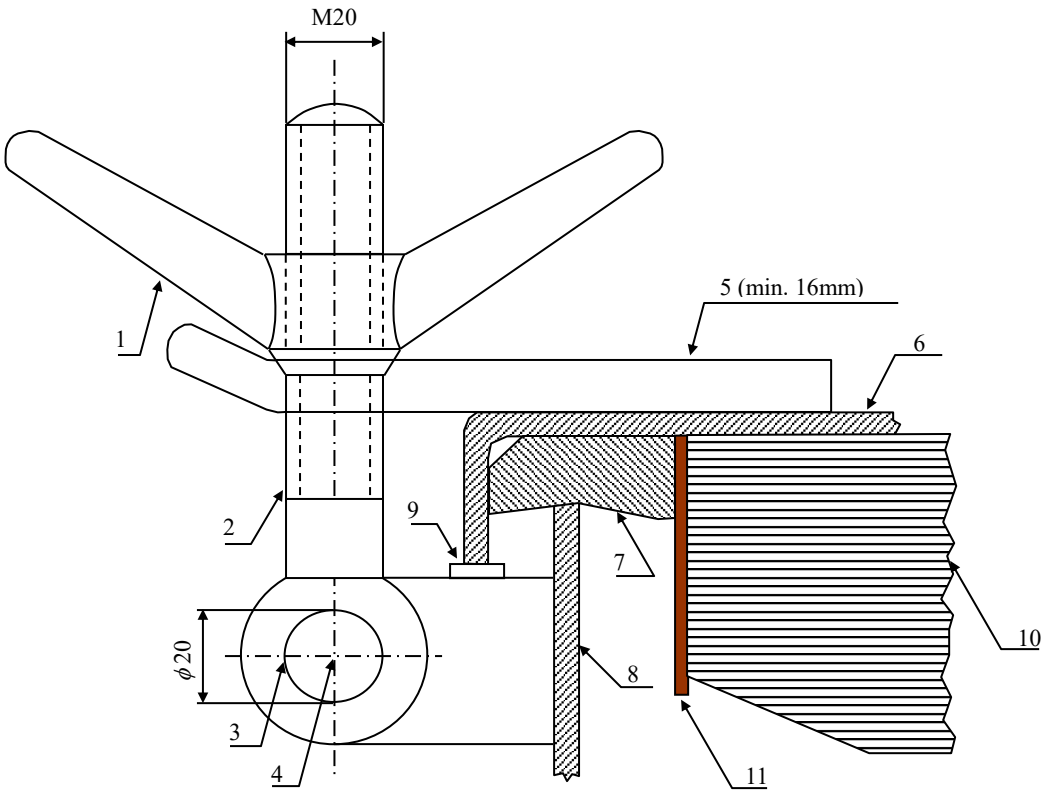

(Note: Dimensions in millimeters)

1: butterfly nut
2: bolt
3: pin
4: center of pin
5: fork (clamp) plate
6: hatch cover
7: gasket
8: hatch coaming
9: bearing pad welded on the bracket of a toggle bolt for metal to metal contact
10: stiffener
11: inner edge stiffener

Fig. II 27-2
Example of a Primary Securing Method

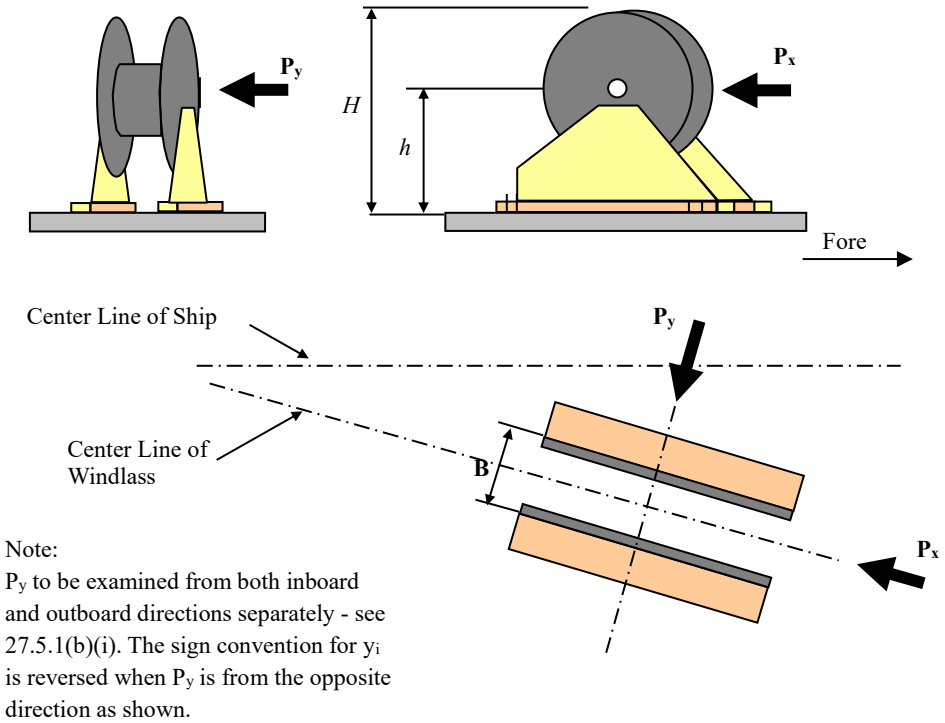

Fig. II 27-3
Direction of Forces and Weight

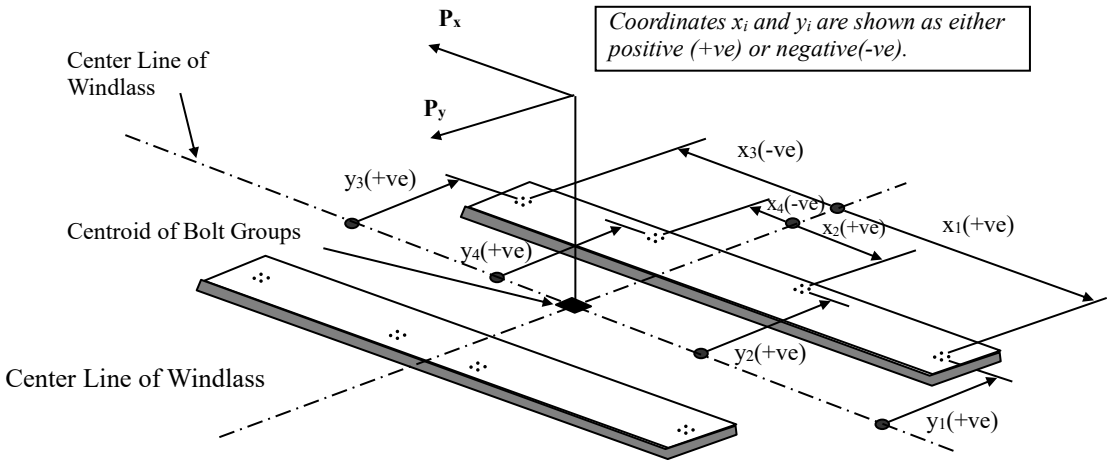

Fig. II 27-4
Sign Convention

Chapter 28

Means of Access

28.1 General Rules

28.1.1 General

(a) Peak tanks, deep tanks, cofferdams, cargo oil tanks, cargo holds with relative high bilge hopper tanks and other similar enclosed spaces are to be provided with means of access, i.e., stages, ladders, steps or other similar facilities for internal examinations in safety. However, such means are not required in aft peak tanks and deep tanks which are exclusively loaded fuel oil or lubrication oil.

(b) Notwithstanding the above (a), spaces specified in 28.2 are to apply the requirements of 28.2 in place of this 28.1.

28.1.2 Means of Access to Spaces

(a) Safe access to peak tanks, deep tanks, cofferdams, cargo oil tanks, cargo holds and other similar enclosed spaces is to be, in general, direct from the open deck and served by at least one access hatchway of manhole and ladder.

(b) Notwithstanding the above (a), safe access to lower spaces of spaces divided in vertically, may be from other spaces, subject to consideration of ventilation aspects.

(c) Notwithstanding the above (a), for each space of ships of less than 300 gross tonnage and space which is not greater than 1.5 m in height from the bottom to the top of the open deck, the provision of fixed ladders is not required.

28.1.3 Means of Access within Spaces

(a) Peak tanks, deep tanks, cofferdams, cargo oil tanks, cargo holds and other similar enclosed spaces are to be provided with means of access to hull structures for examination.

(b) Where it is unavoidable to go over obstructions such as hull structural members of 600 mm or more in height for the access to hull structures within the space, appropriate facilities such as ladders, steps, etc. are to be fitted.

28.1.4 Specifications of Means of Access and Ladders

(a) Means of access are to ensure safety in use.

(b) Permanent means of access are to be of robust construction.

28.1.5 Plans for Means of Access

Plans showing arrangement for means of access to peak tanks, deep tanks, cofferdams, cargo oil tanks, cargo holds with relative high bilge hopper tanks and other similar enclosed spaces are to be kept on board.

28.2 Special Requirements for Oil Tankers and Bulk Carriers

28.2.1 Application

This section of 28.2 applies to each space within the cargo area and fore peak tanks of oil tankers as defined in 2.1.2(c) of Part I, of 500 gross tonnage and over and bulk carriers, as defined in 2.1.2(d)(i) of Part I, of 20,000 gross tonnage and over, constructed on or after 1 January 2006, in place of the requirements of 28.1. Notwithstanding the above, the provision in this section except 28.2.3(a) and (b) and 28.2.5(e), (f) and (g) in relation to access to tanks/spaces, needs not apply to the cargo tanks of combined oil/chemical tankers which are to be complying with the requirements for ships carrying dangerous chemicals in bulk.

28.2.2 General

Each space within the cargo area and fore peak tanks are to be provided with means of access to enable overall and close-up examinations and thickness measurements of the ship's structures to be carried out in safety.

28.2.3 Means of Access to Spaces

(a) Safe access to each space within the cargo area and fore peak tanks is to be direct from the open deck and in accordance with the following (i) to (iii) corresponding to the kind of the space.

(i) Tanks, cofferdams and subdivisions of tanks and cofferdams, having a length of 35 m or more, are to be fitted with at least two access hatchways or manholes and ladders, as far apart as practicable.

(ii) Tanks and cofferdams less than 35 m in length are to be served by at least one access hatchway or manhole and ladder.

(iii) Each cargo hold is to be fitted with at least two access hatchways or manholes and ladders as far apart as practicable. In general, these access are to be arranged diagonally, for example one access near the forward bulkhead on the port side, the other one near the aft bulkhead on the starboard side. At least one of the required two ladders is to be of inclined one except as specified in (c) below.

(b) Notwithstanding the above (a), safe access to double bottom spaces, to forward ballast tanks or to lower spaces of sections divided in vertically, may be from a pump-room, deep cofferdam, pipe tunnel, cargo hold, double hull space or similar compartment not intended for the carriage of oil or hazardous cargoes, subject to consideration of ventilation aspects.

(c) The uppermost entrance section of the ladder providing access from the deck to a tank or cofferdam is to be vertical not less than 2.5 m but not exceed 3.0 m measured clear of the overhead obstructions in way of tank entrance, and to comprise a ladder linking platform which is to be displaced to one side of a vertical ladder. However, the uppermost section of the vertical ladder may be reduced to 1.6 m below the deck head, if the vertical ladder lands on a longitudinal or athwartship permanent means of access fitted within 1.6 m and 3 m below the deck head.

(d) For oil tankers, access ladders to cargo tanks and other spaces in the cargo area (excluding fore peak tanks) are to be in accordance with the followings.

(i) Where two access hatchways or manholes and ladders are required in (a)(i) above, at least one ladder is to be of the inclining type. However, the uppermost entrance section from deck of the ladder is to be vertical in accordance with the provisions of (c) above.

(ii) Where ladders not required to be of the inclined type as specified in (i) above, may be of a vertical type. Where the vertical distance is more than 6 m, vertical ladders are to be connected by one or more ladder linking platforms, generally spaced not more than 6 m apart vertically and displaced to one side of the ladder. The uppermost entrance section from deck of the ladder is to be in accordance with the provisions of (c) above.

(iii) Where one access hatchways or manholes and ladder is required in (a)(ii) above, for this access, an inclined ladder is to be used in accordance with the provisions of (i) above.

(iv) In spaces of less than 2.5 m width, the access to the space may be by means of vertical ladders that comprise of one or more ladder linking platforms spaced not more than 6 m apart vertically and displaced to one side of the ladder. Adjacent sections of ladder are to be laterally offset from each other by at least the width of the ladder. The uppermost entrance section from deck of the ladder is to be in accordance with the provisions of (c) above.

(v) Access from deck to a double bottom space may be by means of vertical ladders through a trunk. The vertical distance from the deck to a resting platform, between resting platforms or a resting platform and the tank bottom is not to be more than 6 m unless otherwise approved by the Society.

(e) For bulk carries, access ladders to cargo holds and other spaces in the cargo area are to be in accordance with the followings.

(i) Where the vertical distance between the upper surface of adjacent decks or between deck and the bottom of the cargo space is not more than 6 m, either a vertical ladder or an inclined ladder.

(ii) Where the vertical distance between the upper surface of adjacent decks or between deck and the bottom of the cargo space is more than 6 m, an inclined ladder or series of inclined ladders at one end of the cargo hold, except the uppermost 2.5 m of a cargo space measured clear of overhead obstructions and the lowest 6 m may have vertical ladders, provided that the vertical extent of the inclined ladder or ladders connecting the vertical ladders is not less than 2.5 m.

(iii) Means of access at the end of the cargo hold other than those specified in (ii) above, may be formed of a series of staggered vertical ladders, which is to comprise of one or more ladder linking platforms spaced not more than 6 m apart vertically and displaced to one side of the ladder. Adjacent sections of ladder are to be laterally offset from each other by at least the width of the ladder. The uppermost entrance section of the ladder directly exposed to a cargo hold is to be vertical for a distance of 2.5 m measured clear of overhead obstructions and connected to a ladder-linking platform.

(iv) A vertical ladder may be used as a means of access to topside tanks, where the vertical distance is 6 m or less between the deck and the longitudinal means of access in the tank or the stringer or the bottom of the space immediately below the entrance. The uppermost entrance section from deck of the vertical ladder of the tank is to be vertical for a distance of 2.5 m measured clear of overhead obstructions and comprise a ladder linking platform, unless landing on the longitudinal means of access, the stringer or the bottom within the vertical distance, displaced to one side of a vertical ladder.

(v) Unless allowed in (iv) above, an inclined ladder is to be used for access to a tank or a space where the vertical distance is greater than 6 m between the deck and a stringer immediately below the entrance, between stringers, or between the deck or a stringer and the bottom of the space immediately below the entrance.

(vi) In case of (v) above, the uppermost entrance section from deck of the ladder is to be vertical for a distance of 2.5 m clear of overhead obstructions and connected to a landing platform and continued with an inclined ladder. The heights of inclined ladders are not to be more than 9 m in actual length and the vertical height is not normally to be more than 6 m. The lowermost section of the ladders may be vertical for a distance of 2.5 m.

(vii) In double-side skin spaces of less than 2.5 m width, the access to the space may be by means of vertical ladders that comprise of one or more ladder linking platforms spaced not more than 6 m apart vertically and displaced to one side of the ladder. Adjacent sections of ladder are to be laterally offset from each other by at least the width of the ladder.

(viii) A spiral ladder may be considered acceptable as an alternative for inclined ladders. In this regard, the uppermost 2.5 m can continue to be comprised of the spiral ladder and need not change over to vertical ladders.

28.2.4 Means of Access within Spaces

(a) For oil tankers, cargo oil tanks and water ballast tanks except those specified in (b) and (h) are to be provided with means of access in accordance with the following (i) to (iv).

(i) For tanks of which the height is 6 m and over permanent means of access are to be provided in accordance with (1) to (6).

(1) continuous athwartship permanent access arranged at each transverse bulkhead on the stiffened surface, at a minimum of 1.6 m to a maximum of 3 m below the deck head;

(2) at least one continuous longitudinal permanent means of access at each side of the tank. One of these accesses is to be at a minimum of 1.6 m to a maximum of 6 m below the deck head and the other is to be at a minimum of 1.6 m to a maximum of 3 m below the deck head;

(3) access between the arrangements specified in (1) and (2) and from the main deck to either (1) or (2);

(4) continuous longitudinal permanent means of access which are integrated in the structural member on the stiffened surface of a longitudinal bulkhead, in alignment, where possible, with horizontal girders of transverse bulkheads are to be provided for access to the transverse webs unless permanent fittings are installed at the uppermost platform for use of alternative means deemed as appropriate by the Society, for inspection at intermediate heights;

(5) for ships having cross-ties which are 6 m or more above tank bottom, a transverse permanent means of access on the cross-ties providing inspection of the tie flaring brackets at both sides of the tank, with access from one of the longitudinal permanent means of access in (4); and

(6) alternative means deemed as appropriate by the Society may be provided for small ship as an alternative to (4) for cargo oil tanks of which the height is less than 17 m.

(ii) For tanks of which the height is less than 6 m, alternative means deemed as appropriate by the Society or portable means may be utilized in lieu of the permanent means of access.

(iii) Notwithstanding the above (i) and (ii), tanks not containing internal structures need not to be provided with permanent means of access.

(iv) For the access to under deck structures, transverse webs and cross-ties outside the reach of permanent means of access, as required in (i) and (ii) above, alone or in combination with portable means, means deemed appropriate by the Society are to be provided.

(b) For oil tankers, water ballast wing tanks of less than 5 m width forming double side spaces and their bilge hopper sections are to be provided with means of access in accordance with the following (i) to (iii).

(i) For double side spaces above the upper knuckle point of the bilge hopper sections, permanent means of access are to be provided in accordance with (1) to (3):

(1) where the vertical distance between horizontal uppermost stringer and deck head is 6 m or more, one continuous longitudinal permanent means of access is to be provided for the full length of the tank with a means to allow passing through transverse webs installed at a minimum of 1.6 m to a maximum of 3 m below the deck head with a vertical access ladder at each end of the tank;

(2) continuous longitudinal permanent means of access, which are integrated in the structure, at a vertical distance not exceeding 6 m apart; and

(3) plated stringers are, as far as possible, to be in alignment with horizontal girders of transverse bulkheads.

(ii) For bilge hopper sections of which the vertical distance from the tank bottom to the upper knuckle point is 6 m and over, one longitudinal permanent means of access is to be provided for the full length of the tank in accordance with the following (1) and (2). It is to be accessible by vertical permanent means of access at each end of the tank.

(1) The longitudinal continuous permanent means of access may be installed at a minimum 1.6 m to a maximum 3 m from the top of the bilge hopper section. In this case, a platform extending the longitudinal continuous permanent means of access in way of the web frame may be used to access the identified structural critical areas.

(2) Alternatively, the continuous longitudinal permanent means of access may be installed at a minimum of 1.2 m below the top of the clear opening of the web ring allowing a use of portable means of access to reach identified structural critical areas.

(iii) Where the vertical distance referred to in (ii) is less than 6 m, alternative means deemed as appropriate by the Society or portable means of access may be utilized in lieu of the permanent means of access. To facilitate the operation of the alternative means of access, in-line openings in horizontal stringers are to be provided. The openings are to be of an adequate diameter and are to have suitable protective railings.

(c) For bulk carriers, means of access to the overhead structure of the cross deck are to be fitted in accordance with the following (i) to (v).

(i) Permanent means of access are to be fitted to provide access to the overhead structure at both sides of the cross deck and in the vicinity of the centerline. Each means of access is to be accessible from the cargo hold access or directly from the main deck and installed at a minimum of 1.6 m to a maximum of 3 m below the deck.

(ii) An athwartship permanent means of access fitted on the transverse bulkhead at a minimum 1.6 m to a maximum 3 m below the cross deck head is accepted as equivalent to (i).

(iii) Access to the permanent means of access to overhead structure of the cross deck may also be via the upper stool.

(iv) Ships having transverse bulkheads with full upper stools with access from the main deck which allows monitoring of all framing and plate from inside do not require permanent means of access of the cross deck.

(v) Alternatively, movable means of access may be utilized for access to the overhead structure of the cross deck if its vertical distance is 17 m or less above the tank top.

(d) For cargo holds of bulk carriers, means of access are to be fitted in accordance with the following (i) to (vi).

(i) Permanent means of vertical access are to provided in all cargo holds and built into the structure to allow for an inspection of a minimum of 25% of the total number of hold frames port and starboard equally distributed throughout the hold including at each end in way of transverse bulkheads. But in no circumstance, this arrangement is to be less than 3 permanent means of vertical access fitted to each side (fore and aft ends of hold and mid-span). Permanent means of vertical access fitted between two adjacent hold frames is counted for an access for the inspection of both hold frames. A portable means of access may be used to gain access over the sloping plating of lower hopper ballast tanks.

(ii) In addition to (i), portable or movable means of access are to be utilized for access to the remaining hold frames up to their upper brackets and transverse bulkheads.

(iii) Portable or movable means of access may be utilized for access to hold frames up to their upper bracket in place of the permanent means required in (i). These means of access are to be carried on board the ship and readily available for use.

(iv) The width of vertical ladders for access to hold frames is to be at least 300 mm, measured between stringers.

(v) A single vertical ladder over 6 m in length is acceptable for the inspection of the hold side frames in a single skin construction.

(vi) For double-side skin construction no vertical ladder for the inspection of the cargo hold surfaces is required. Inspection of this structure is to be provided from within the double hull space.

(e) For topside tanks of bulk carriers, means of access are to be fitted in accordance with the following (i) to (iv).

(i) For each topside tank of which the height is 6 m and over, one longitudinal continuous permanent means of access is to be provided along the side shell webs and installed at a minimum of 1.6 m to maximum of 3 m below deck with a vertical access ladder in the vicinity of each access to that tank.

(ii) If no access holes are provided through the transverse webs within 600 mm of the tank base and the web frame rings have a web height greater than 1 m in way of side shell and sloping plating, then step rungs/grab rails are to be provided to allow safe access over each transverse web frame ring.

(iii) Three permanent means of access, fitted at the end bay and middle bay of each tank, are to be provided spanning from tank base up to the intersection of the sloping plate with the hatch side girder. The existing longitudinal structure, if fitted on the sloping plate in the space may be used as part of this means of access.

(iv) For topside tanks of which the height is less than 6 m, alternative means deemed as appropriate by the Society or portable means may be utilized in lieu of the permanent means of access.

(f) For bilge hopper tanks of bulk carriers, means of access are to be fitted in accordance with the following (i) to (iii).

(i) For each bilge hopper tank of which the height is 6 m and over, one longitudinal continuous permanent means of access is to be provided along the side shell webs and installed at a minimum of 1.2 m below the top of the clear opening of the web ring in accordance with (1) to (3), with a vertical access ladder in the vicinity of each access to the tank.

(1) An access ladder between the longitudinal continuous permanent means of access and the bottom of the space are to be provided at each end of the tank.

(2) Alternatively, the longitudinal continuous permanent means of access can be located through the upper web plating above the clear opening of the web ring, at a minimum of 1.6 m below the deck head, when this arrangement facilitates more suitable inspection of identified structurally critical areas. An enlarged longitudinal frame can be used for the purpose of the walkway.

(3) For double-side skin bulk carriers, the longitudinal continuous permanent means of access may be installed within 6 m from the knuckle point of the bilge, if used in combination with alternative methods to gain access to the knuckle point.

(ii) If no access holes are provided through the transverse ring webs within 600 mm of the tank base and the web frame rings have a web height greater than 1 m in way of side shell and sloping plating, then step rungs/grab rails are to be provided to allow safety access over each transverse web frame ring.

(iii) For bilge hopper tanks of which the height is less than 6 m, alternative means deemed as appropriate by the Society or portable means may be utilized in lieu of the permanent means of access. Such means of access are to be demonstrated that they can be deployed and made readily available in the areas where needed.

(g) For double-side skin tanks of bulk carriers, permanent means of access are to be provided in accordance with the requirements in (a) or (b), as applicable.

(h) For fore peak tanks with a depth of 6 m or more at the centerline of the collision bulkhead, a suitable means of access are to be provided for access to critical areas such as the underdeck structure, stringers, collision bulkhead and side shell structure in accordance with the following (i) and (ii).

(i) Stringers of less than 6 m in vertical distance from the deck head or a stringer immediately above are considered to provide suitable access in combination with portable means of access.

(ii) In case the vertical distance between the deck head and stringers, stringers or the lowest stringer and the tank bottom is 6 m or more, alternative means of access deemed as appropriate by the Society are to be provided.

(i) Where a permanent means of access may be susceptible to damage during normal cargo loading and unloading operations or where it is impracticable to fit permanent means of access, deemed by the Society, alternative means of access deemed as appropriate by the Society may be utilized in lieu of those specified in (a) to (h) above, provided that the means of attaching, rigging, suspending or supporting the such means of access forms a permanent part of the ship's structure.

28.2.5 Specifications for Means of Access and Ladders

(a) Permanent means of access are, as far as possible, to be integral to the structure of the ships, thus ensuring that they are robust.

(b) Elevated passageways forming sections of a permanent means of access, where fitted, are to have a minimum clear width of 600 mm, except for going around vertical webs where the minimum clear width may be reduced to 450 mm, and have guard rails over the open side of their entire length.

(c) Sloping structures where provided in part of the access are to be a non-skid construction.

(d) Elevated passageways forming sections of a permanent means of access, are to be provided with guard rails of 1,000 mm in height and consist of a rail and an intermediate bar 500 mm in height and of substantial construction, with stanchions not more than 3 m apart, on the open side. Guardrail stanchions are to be attached to the permanent means of access.

(e) For access through horizontal openings, hatches or manholes, the dimensions are to be sufficient to allow a person wearing a self-contained air-breathing apparatus and protective equipment to ascend or descend any ladder without obstruction and also provide a clear opening to facilitate the hoisting of an injured person from the bottom of the space. The minimum clear opening is not to be less than 600 mm × 600 mm. When access to a cargo hold is arranged through the cargo hatch, the top of the ladder is to be placed as close as possible to the hatch coaming. Access hatch coamings having a height greater than 900 mm are also to have steps on the outside in conjunction with the ladder.

(f) For access through vertical openings, or manholes, in swash bulkheads, floors, girders and web frames providing passage through the length and breadth of the space, the minimum 600 mm × 800 mm at a height of not more than 600 mm from the bottom shell plating unless gratings or other foot holds are provided.

(g) For oil tankers of less than 5,000 tonnes deadweight, smaller dimensions for the openings referred to in (e) and (f) may be approved by the Society in special circumstances, if the ability to traverse such openings or to remove an injured person can be proved to the satisfaction of the Society.

(h) Access to permanent means of access and vertical openings from the ship's bottom is to be provided by means of easily accessible passageways, ladders or treads. Treads are to be provided with lateral support for the foot. Where the rungs of ladders are fitted against a vertical surface, the distance from the center of the rungs to the surface is to be at least 150 mm. Where vertical manholes are fitted higher than 600 mm above the walking level, access is to be facilitated by means of treads and hand grips with platform landings on both sides.

(i) For ladders or similar facilities forming sections of a permanent means of access, their specifications are to be satisfaction of the Society.

28.2.6 Ship Structure Access Manual

(a) For every ship, means of access to carry out overall and close-up inspections and thickness measurements are to be described in a Ship Structure Access Manual approved by the Society, any change of contents of which is to be updated and an updated copy of which is to be kept on board. The Ship Structure Access Manual is to be include the following for each space.

(i) Plans showing the means of access to the space, with appropriate technical specifications and dimensions;

(ii) Plans showing the means of access within each space to enable an overall inspection to be carried out, with appropriate technical specifications and dimensions. The plans are to indicate from where each area in the space can be inspected;

(iii) Plans showing the means of access within the space to enable close-up inspections to be carried out, with appropriate technical specifications and dimensions. The plans are to indicate the positions of critical structural areas, whether the means of access is permanent or portable and from where each area can be inspected;

(iv) Instructions for inspecting and maintaining the structural strength of all means of access and means of attachment, taking into account any corrosive atmosphere that may be within the space;

(v) Instructions for safety guidance when rafting is used for close-up inspections and thickness measurements;

(vi) Instructions for the rigging and use of any portable means of access in a safety manner;

(vii) An inventory of all portable means of access; and

(viii) Records of periodical inspections and maintenance of the ship's means of access.

(b) Where alternative means of access are adapted in accordance with the provisions of 28.2.4, means for safety operation and rigging of such alternative means to and from and within the spaces are to be clearly described in the Ship Structure Access Manual.

Chapter 29

Damage Control for Cargo Ships

29.1 Application

29.1.1 The requirements in this chapter are applied to the cargo vessels of 500 gross tonnage and over which are engaged in international voyage.

29.2 Damage Control

29.2.1 Watertight Doors

(a) Watertight doors in watertight bulkhead, except those permanently closed at sea, are to be provided with position indicators showing whether the doors are open or closed on the bridge and at all operating positions.

(b) Electrical installations for watertight doors specified in (a) except waterproof type approved by the Society are not to be provided with under freeboard deck.

29.2.2 Cargo Ports and Other Similar Openings

For bow door, stern door or shell door required to be watertight, indicators which indicate whether the doors are opened or closed are to be provided on the navigation bridge. However, in case where it is to be deemed as appropriate by the Society, this requirement may be dispensed with.

29.3 Booklet and Plan for Damage Control

29.3.1 Booklet

(a) Booklet is to contain the information shown in the damage control plan.

(b) Booklet is to be provided at a suitable place which is made available to the officers of ships.

(c) The Booklet is recommended to be prepared in the working language of the ship. Where the language used in preparation of the Booklet is not English, a translation into English is to be included.

29.3.2 Damage Control Plan

(a) Damage control plan approved by the Society is to be permanently exhibited or readily available on the navigating bridge, for the guidance of the officer in charge of the ship.

(b) The damage control plan is to show clearly for the each deck and hold the boundaries of the watertight compartments, the openings therein with means of closure (including the position of any controls thereof), and the arrangements for the correction of any list due to flooding.

(c) The damage control plan is recommended to be prepared in the working language of the ship. Where the language used in preparation of the plan is not English, a translation into English is to be included.

29.3.3 Damage Stability Information

Ships subject to Chapter 30A of this Part are to be provided with damage stability information deemed appropriate by the Society.

Chapter 30

Intact Stability

30.1 Application

30.1.1 The requirements on intact stability (hereinafter referred to as "stability" in this chapter) in this chapter apply to ships which are 24 meters in length for freeboard and over. However, fishing vessels, mobile offshore drilling units and dynamically supported craft may be excepted.

30.1.2 Special consideration may be given to the ships registered for a restricted service.

30.1.3 In case of the ships considered inadequate to be fully and/or directly applied the requirements in this chapter because of some special reasons (e.g. novel design features, unusual form of ships), stability will be individually determined by the Society.

30.1.4 "Timber deck cargo" means a cargo of timber carried on an uncovered part of a freeboard or superstructure deck. The term does not include wood pulp or similar cargo.

30.1.5 "Down flooding angle" refers to the angle of heel at which openings in the hull, superstructures or deckhouses which cannot be closed weathertight immerse.

30.1.6 The Society may make special requirements as instructed by the flag governments of ships or the governments of the sovereign nations in which ships navigate.

30.2 Stability Information

30.2.1 Stability Information Booklet

Ships are to be provided with a stability information booklet approved by the Society, to ensure the enough stability of the ship under varying conditions of service. Such booklet is to include principal particulars regarding the ship's stability, the results of stability experiments and information as necessary by the master to verify the ship's stability.

30.2.2 Stability Computer

Where a computer for stability calculation is on board the ship as a supplement to the stability information booklet, such computer is to be approved by the Society. The computer is to be provided with an operation manual.

30.2.3 Special Requirements for Bulk Carriers

(a) Bulk carriers as defined in SOLAS Chapter XII, of less than 150 m in length L but not less than 500 gross tonnage are to be fitted with a stability computer approved by the Society, as a supplement to the stability information booklet.

(b) Notwithstanding the provisions of preceding (a), for bulk carriers not engaged on international voyages, where deemed appropriate by the Society taking account of various conditions of such ships related to the navigation, the requirements of the loading computers need not to be applied to.

30.2.4 Draft Marks

Every ship is to have scales of drafts marked clearly at the bow and stern. In the case where the draft marks are not located where they are easily readable, or operational constraints for a particular trade make it difficult to read the draft

marks, then the ship is also to be fitted with a reliable draft indicating system by which the bow and stern drafts can be determined.

30.3 Stability Requirement

30.3.1 Stability curves and heeling moment curves are to be prepared by the method deemed appropriate by the Society for all designed loading conditions and they are to be verified to comply with the requirements in 30.5 and 30.6.

30.3.2 Excessive stability is to be avoided, since it may produce a greater acceleration which may have adverse effects in hull structures, cargoes, etc.

30.3.3 For the ships navigating in the areas where icing is expected to occur, it is to be considered that the projected area against wind is increased and the position of centre of gravity is heightened due to icing on the structures.

30.3.4 In cases where anti-rolling devices are installed in a ship, the requirements given in 30.5 and 30.6 are to be satisfied when such devices are in operation and when there is either a failure of power supply to the devices or a failure of the devices.

30.3.5 Provisions are to be made for a safe margin of stability at all stages of the voyage, regard being given to additions of weight, such as those due to the absorption of water and icing as well as to losses of weight such as those due to the consumption of fuel and stores.

30.3.6 Curves or tables of minimum operational metacentric height (GM) or maximum centre of gravity (VCG) are to extend over the full range of operational trims.

30.4 Calculation on Stability

Stability is to be calculated under the following conditions:

30.4.1 In preparing stability curves, the position center of gravity is to be determined on the basis of the data obtained at inclining test required in 1.16 of Part I.

30.4.2 Free surface effects of liquid in tanks are to be of what the stability during navigation under the relevant design loading condition is most severely affected.

30.4.3 Where anti-rolling devices are installed in a ship, the requirements in 30.5 are to be satisfied whether the devices are in operation or not.

30.5 General Stability Criteria

30.5.1 For ships without timber deck cargoes, the stability curves are to comply with the following requirements in Fig. II 30-1.

(a) A_1 is not to be less than 0.055 m · rad.

(b) A_2 is not to be less than 0.03 m · rad.

(c) $(A_1 + A_2)$ is not to be less than 0.09 m · rad.

(d) GZ is to be at least 0.20 m at an angle of heel equal to or greater than 30°.

(e) θ_{max} is not to be less than 25°.

(f) G_0M is not to be less than 0.15 m.

30.5.2 For ships loaded with timber deck cargoes, the stability curves are to comply with the following requirements in Fig. II 30-1.

(a) $(A_1 + A_2)$ is not to be less than 0.08 m · rad.

(b) GZ_{max} is not to be less than 0.25 m.

(c) G_0M is not to be less than 0.10 m during navigation.

(d) The value of all symbols in this Part is to be one in relevant loading condition except the case that it is particularly specified.

where:

A_1 = Area under stability curve between 0° and 30° (m · rad).

A_2 = Area under stability curve between 30° and θ_u (m · rad).

θ_u = Heeling angle (degree) to be taken of whichever is less, down flooding angle in relevant loading condition or 40°.

GZ_{max} = Maximum righting lever (m)

θ_{max} = Heeling angle at which righting arm reaches maximum (degree).

G_0M = Initial metacentric height corrected by free surface effect (m).

30.6 Stability Criteria in Wind and Waves

30.6.1 Stability curves and wind-heeling moment lever curves of ships are to comply with the following requirements in Fig. II 30-2.

(a) Heeling angle caused by steady wind is to be less than 16° or an angle corresponding to 80% of immersing angle of deck edge, whichever is less.

(b) Area "b" is not to be less than area "a".

where:

l_{w1} = Heeling moment lever caused by steady wind (m) given by the following formula:

$$= \frac{0.0514AZ}{W}$$

A = Projected lateral area of hull and cargoes on deck above waterline (m^2).

Z = Vertical distance between the centre of "A" and the centre of underwater projected lateral area of hull (m). In general, the centre of underwater projected lateral area may be approximated to locate at half the draught.

W = Displacement (ton).

l_{w2} = Heeling moment lever caused by gust (m) given by the following formula:

$= 1.5l_{w1}$

a = Area encircled by stability curve, l_{w2} and θ_r (m · rad).

b = Area encircled by stability curve, l_{w2} and θ_2 (m · rad).

θ_r = Angle of rolling stop motion (degree). In general, it may be given by the formula $(\theta_0 - \theta_1)$.

θ_c = Heeling angle at the second intersection between heeling moment lever (l_{w2}) and stability curve

(degree).

θ_2 = Heeling angle (degree) to be taken of whichever is the least, down flooding angle, θ_c or 50°.

θ_0 = Angle of heel under action of steady wind (degree).

θ_1 = Angle of roll to windward due to wave action (degree) given by the following formula :

$= 109x_1x_2k\sqrt{rs}$

x_1 = Values obtained from Table II 30-1 according to the value of B/d. In case the value of B/d becomes intermediate, values are to be determined by interpolation.

x_2 = Values obtained from Table II 30-2 according to the value of C_b. In case the value of C_b becomes intermediate, values are to be determined by interpolation.

C_b = Block coefficient given by the following formula :

$$= \frac{W}{1.025LBd}$$

L = Length of the ship at waterline (m)

k = Values determined as follows;

= 1.0 for round-bilged ships having neither bilge keels nor bar keels,

= 0.7 for ships with sharp bilges,

For ships with bilge keel and/or bar keels: Values obtained from Table II 30-3 according to the value of $\frac{100A_k}{LB}$.

In case $\frac{100A_k}{LB}$ becomes intermediate, values are to be determined by interpolation.

A_k = Total area of bilge keels, projected lateral area of bar keels or sum of those areas (m^2).

r = Values obtained from the following formula.

However, the value of r need not be taken over 1.0.

$$= 0.73 + 0.6\frac{OG}{d}$$

OG = Distance between the centre of gravity and the waterline (m), and is taken as positive when the centre of gravity is above waterline.

s = Values obtained from Table II 30-4 according to the value of T. In case T becomes intermediate, values are to be determined by interpolation.

T = Rolling period (seconds) obtained from the following formula,

$$= \frac{2B}{\sqrt{G_0M}}\left(0.373 + 0.023\frac{B}{d} - 0.043\frac{L}{100}\right)$$

G_0M = As specified in 30.5.

(c) Alternative means for determining the wind heeling lever (l_{w1}) may be accepted, to the satisfaction of the Society, as an equivalent to calculation in 30.6.1(b). When such alternative tests are carried out, reference shall be made based on the Guidelines developed by the Organization (MSC.1/Circ.1200). The wind velocity used in the tests shall be 26 m/s in full scale with uniform velocity profile. The value of wind velocity used for ships in restricted services may be reduced to the satisfaction of the Society.

30.6.2 Where the requirements specified in 30.6.1 apply to the ships registered as restricted service, the values of l_{w1} and s may be modified by the Society.

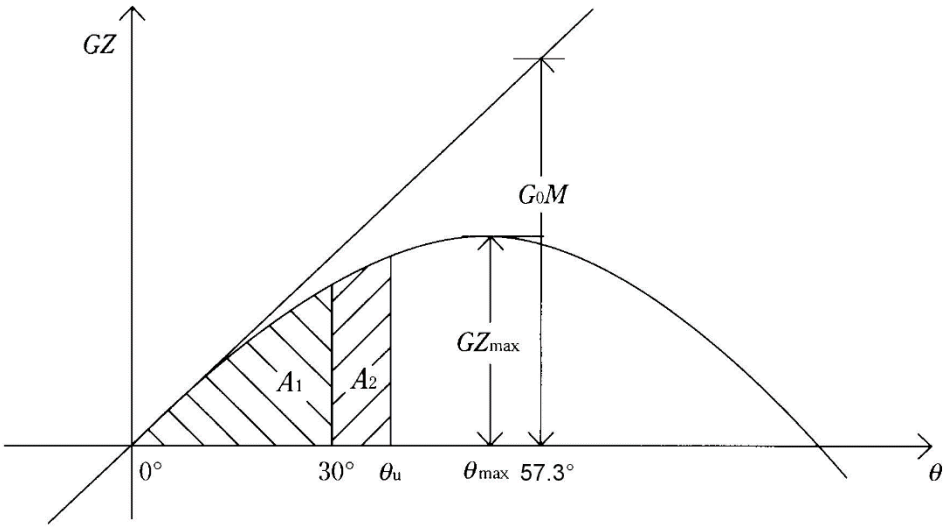

Fig. II 30-1
Stability Curve (General Stability Criteria)

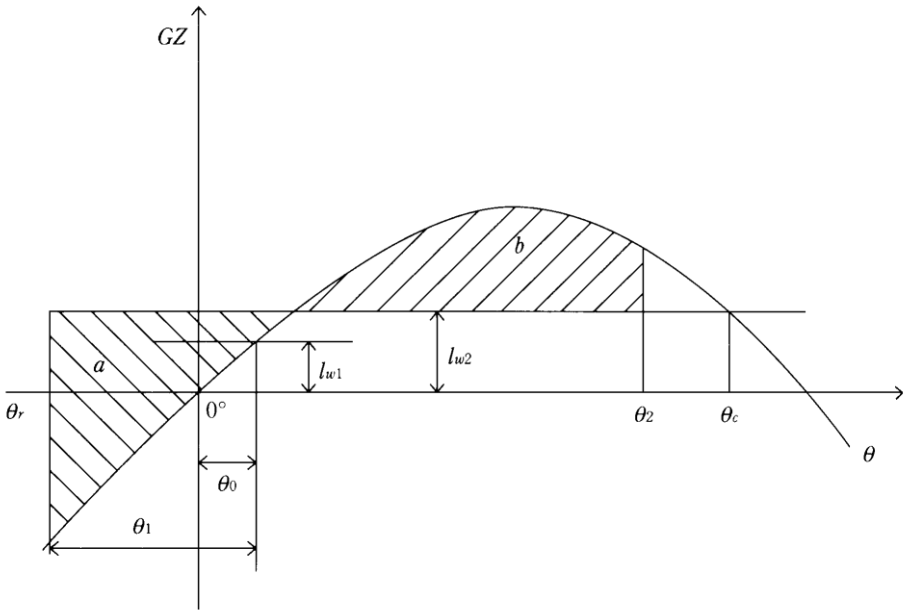

Fig. II 30-2
Stability and Wind-heeling Moment Lever Curve (Stability Criteria in Wind and Waves)

Table II 30-1
Value of x_1

B/d	≤ 2.4	2.5	2.6	2.7	2.8	2.9	3.0	3.1	3.2	3.3	3.4	≥ 3.5
x_1	1.0	0.98	0.96	0.95	0.93	0.91	0.90	0.88	0.86	0.84	0.82	0.80

Table II 30-2
Value of x_2

C_b	≤ 0.45	0.50	0.55	0.60	0.65	≥ 0.70
x_2	0.75	0.82	0.89	0.95	0.97	1.0

Table II 30-3
Value of k

$100A_k / LB$	0	1.0	1.5	2.0	2.5	3.0	3.5	≥ 4.0
k	1.0	0.98	0.95	0.88	0.79	0.74	0.72	0.70

Table II 30-4
Value of s

T	≤ 6	7	8	12	14	16	18	≥ 20
s	0.100	0.098	0.093	0.065	0.053	0.044	0.038	0.035

Chapter 30A

Subdivision and Damage Stability

30A.1 General

30A.1.1 Ships of applicable size, type and service are to have subdivision and damage stability as required by the International Convention for the Safety of Life at Sea (SOLAS), 1974, as amended, as follows:

(a) Cargo ships: Regulation II-1/4 to 7-3.

(b) Passenger ships: Regulation II-1/4 to 8-1.

Chapter 31
Ship Recycling

31.1 General

31.1.1 Application

The requirement in this chapter is applicable to new and existing ships for which the optional Ship Recycling notation **SRE** and/or **SRE-EU** has been requested. Obtaining this notation will assist in complying with regulation 5 of the Hong Kong International Convention for the Safe and Environmentally Sound Recycling of Ship, 2009 (SR/CONF/45) and/or Article 5 of EU 1257/2013. Furthermore, to achieve the goal of safe and environmentally sound recycling of ship, the ship recycling facility selected is to be the one authorized by the Competent Authority, taking into consideration the certification of ISO 30000 series standards.

31.1.2 Notation

Ships which have had the ship details and Part 1 of the Inventory of their "Statement on Inventory of Hazardous Materials" (hereinafter referred to as the Statement, refer to 31.2.1 of this chapter) prepared and certified to the requirements of this chapter to the satisfaction of the Surveyors to the Society will be eligible to receive the notation **SRE** and/or **SRE-EU** (Ship Recycling).

31.1.3 Definitions

(a) Inventory – an itemized listing, specifying the type, location and approximate quantity of hazardous materials used in the ship's construction and equipment.

(b) Hazardous Materials (Hazmat) – materials or substances that are known to have the potential to harm human health and/or the environment.

(c) New Ship – means a ship for which either:
   (i) the building contract is placed on or after the date of application of this Hong Kong Convention / EU Regulation;
   (ii) in the absence of a building contract, the keel is laid or the ship is at a similar stage of construction 6 months after the date of application of this Hong Kong Convention / EU Regulation or thereafter; or
   (iii) the delivery takes place 30 months after the date of application of this Hong Kong Convention / EU Regulation or thereafter;

(d) Existing Ship – means a ship not complying with the above definition of a new ship.

(e) Shipowner – means the person or persons or company registered as the Owner of the ship or, in the absence of registration, the person or persons or company owning the ship. However, in the case of a ship owned by a State and operated by a company which in the State is registered as the ship's operator, "Owner" shall mean such company.

(f) Supplier – vendors which provide products, in support of the ship's construction and outfitting. This group includes equipment manufacturers and material providers.

(g) Threshold Level – is defined as the concentration value in homogeneous materials.

(h) Homogeneous Material – means a material of uniform composition throughout that cannot be mechanically dis-jointed into different materials, meaning that the materials cannot, in principle, be separated by mechanical action such as unscrewing, cutting, crushing, grinding, and abrasive processes.

31.2 Statement on Inventory of Hazardous Materials (the Statement)

The Statement for ships comply with Hong Kong Convention / EU Regulation is comprised of two components as follows.

(a) Ship Details

The first component of the Statement is referred to as the "Ship Details", and includes the following:

(i) Name of ship

(ii) Distinctive number or letters

(iii) Port of registry

(iv) Gross tonnage

(v) IMO number

(vi) Name and address of Shipowner

(vii) IMO registered Owner identification number

(viii) IMO company identification number

(ix) Date of construction

Refer to 31.5.5 of this chapter for an acceptable equivalent to the above.

(b) Inventory of Hazardous Materials (IHM)

The second component of the Statement is the actual inventory of the hazardous materials, containing the location, the approximate quantity/volume of each identified material on board the ship. This inventory is divided into the following parts.

(i) Part 1: Hazardous or potentially hazardous materials/substances utilized in the ship's structure and equipment/systems.

(ii) Part 2: Operationally generated waste

(iii) Part 3: Stores

Preparation of Part 1 is to be based on the listing of those materials/substances considered to be hazardous or potentially hazardous as found in Sections A and B of Table II 31-2. Refer to 31.3.3 and 31.4.2 of this chapter. Part 2 and Part 3 are to be prepared by the Shipowner prior to or during the final voyage to the recycling facility and are outside the scope of the class notation.

Table II 31-5 of this chapter is a representative format for the inventory component of the Statement.

31.3 Requirement for New Ships

31.3.1 General

Throughout a ship's design and construction, designers and builders are to exercise environmental judgment in the selection of all materials and substances to be incorporated into the ship's structure and equipment.

31.3.2 Prohibited or Restricted Materials

Substances known to be hazardous which are prohibited or restricted by national regulation and various international agreements and conventions are not to be used in the construction. Examples of these substances and the corresponding statutory instruments are detailed in Table II 31-1.

31.3.3 Part 1 of the Inventory of Hazardous Materials

Upon completion of the material selection process, Part 1 of the IHM is to be prepared by the shipbuilder. Where the substances listed in Sections A and B of Table II 31-2 have been added to the vessel above the threshold levels specified in Table II 31-4, their identity, location and quantity are to be incorporated into Part 1 of the Inventory.

Documentation in the form of drawings or tables noting the use of hazardous materials, quantity, and location are to be submitted to the Society for review. At the ship builders option each drawing submitted is to be annotated in such a manner as to detail the use of hazardous or potentially hazardous materials thereon.

31.3.4 Vendor Supplied Equipment and Materials

Shipbuilders are to work closely with all their suppliers such that all equipment provided is environmentally safe or specifically itemized on the inventory. These suppliers are to confirm and declare whether or not the substances identified in Tables II 31-2 and 31-3 of this Chapter are present above the threshold level specified in Table II 31-4 of this Chapter, using the "supplier's declaration" approach established by the IMO Guidelines.

The approach consists of two declarations, as follows:

(a) Material Declaration (MD)

A declaration prepared by the suppliers, including the upstream suppliers in the equipment/system supply chain, detailing the specific substances including the system/item, the substance, and amount of substance. For detailed explanation and information requirements for the form, refer to MEPC.269(68) Section 6 and Appendix 3.

(b) Supplier's Declaration of Conformity (SDoC)

A declaration by the supplier to confirm conformity of the delivered product and related Material Declaration to the law and compliance with appropriate management/control requirements on the chemical substance contained in the product. Refer to MEPC.269(68) Section 7.

Shipbuilders are to request their suppliers to submit the above declaration forms for the products at the time of purchase. This collection of information, particularly the materials declarations, is to be used to prepare Part 1 of the Inventory.

31.4 Requirement for Existing Ships

31.4.1 General

Many materials and substances which were previously assumed to be non hazardous and selected for installation onboard ships, are no longer being utilized, or have since been identified as being hazardous. To assist in safeguarding the ship's crew, and workers involved in ship recycling, as well as the marine environment, documenting the location and approximate volume/quantity of materials currently classified as hazardous or potentially hazardous is to be achieved to the greatest degree possible.

It is recognized that it is often not possible to accurately define, identify, or locate specific hazardous or potentially hazardous materials onboard existing ships due to their concealment or unknown locations.

31.4.2 Part 1 of the Inventory of Hazardous Materials

Development of Part 1 of the IHM for an exiting vessel is the responsibility of the Shipowner.

The development of the IHM is to be prepared in accordance with Regulation 5.2 of Hong Kong Convention and/or Article 5.2 of EU 1257/2013, taking into account the development guidelines given in MEPC.269(68) Section 4.2 and Appendix 5.

It is required to identify the prohibited materials listed in Section A of Table II 31-2 of this Chapter contained in the ship's structure and equipment, their identity, location, and approximate quantity in the Inventory. Hazardous materials listed in Section B of Table II 31-2 of this Chapter and contained in the ship's structure and equipment are to be identified as far as practical.

The determination of hazardous materials present onboard existing ships is, as far as practical, to be conducted as prescribed for new ships. Alternative procedure for hazardous materials determination through a visual/sampling check

process as prescribed in MEPC.269(68) Section 4.2 can be applied. But this procedure is not to be used for any new installation resulting from the conversion or repair of existing ships after the initial preparation of the Inventory.

This alternative procedure consists of the following steps:

(a) Collection of Necessary Information (Step 1)

The information collection process is to be made taking into account the guidance in MEPC.269(68) Subsection 4.2.5 and Appendix 5 Section 2.

Often the ship's crew can provide assistance as to the location of hazardous or potentially hazardous materials onboard as a result of their in depth ship-specific knowledge developed from carrying out or witnessing repairs and maintenance. Additionally the crew may provide valuable information associated with equipment replacement or modifications. Thus, shipowners may want to consider interviewing the ship's crew for information.

(b) Assessment of Collected Information (Step 2)

The information collected in Step 1 is to be assessed with the purpose of determining the existence of hazardous materials in the ship's structure, equipment, and systems by classifying each item as "contained", "not contained", "unknown" or "potentially containing hazmat" and to work out a suitable scope of the hazmat investigation by visual/sampling checks. Guidance for this step can be found in MEPC.269(68) Subsection 4.2.6 and Appendix 5 Section 3. The assessment and investigation are to cover all materials listed in Section A of Table II 31-2 of this Chapter. The substances in Section B of Table II 31-2 of this Chapter are to be identified and listed as far as practical.

(c) Preparation of Visual/Sampling Check Plan (Step 3)

Based on the assessment results of the previous step, a detailed survey and sampling check plan is to be developed. The goal of the survey and sampling is to assist in confirming if hazardous or potentially hazardous materials are present and where they are located.

Specific guidelines on how to decide on when to apply visual check or sample check are given in MEPC.269(68) Subsection 4.2.7 and Appendix 5 section 4.

A copy of the visual/sampling check plan is to be submitted to the Society for review before conducting the on-board survey and sampling checks.

(d) Onboard Visual/Sampling Check (Step 4)

The onboard visual/sample check is to be carried out in accordance with the visual/sampling check plan. Guidance on the conduct of the visual survey and sampling checks is given in MEPC.269(68) Subsection 4.2.8 and Appendix 5 Section 5.

When a sampling check is carried out, the sample is to be forwarded to a recognized laboratory for testing and the records of the sample taken, the sampling point marked on the ship plan, and the laboratory test results are to be retained for record and reference.

An external specialist having specific knowledge in the means of how to take material samples and preventative measures to be taken to avoid cross contamination may be retained by the shipowner.

(e) Preparation of Part 1 of the Inventory and related documentation (Step 5)

Development of Part 1 of the IHM for existing ships is to be made by the shipowner, based on results of the Owner's evaluation/analysis of available hazmat information, results of visual surveys and any hazmat/substance testing reports. For any equipment, system, and/or area that is classed as either "containing hazardous material" (CHM) or "potentially containing hazardous material" (PCHM), their identity and location together with the hazmat identity and approximate quantity are to be listed in Part 1 of the Inventory.

Any limitations regarding the scope of laboratory reports or prepared inventory are to be stated or noted in the "Remarks" column of the Inventory.

Development of a location diagram of the hazardous materials identified and listed in the inventory is recommended in order to help the ship's crew gain a visual understanding of the Inventory and the onboard auditing survey by an CR Surveyor.

Expert assistance is required for the performance of the procedural steps of collecting and assessing the necessary hazardous materials information, preparing a visual/sample check plan, and performing the visual and sampling checks. The shipowner may consider employing a qualified and experienced hazardous material expert for the hazmat review and sampling, and contracting an accredited test laboratory for chemical analysis of samples.

31.4.3 New Installations

New installations containing hazardous materials listed in Section A of Table II 31-2 are prohibited, as for those containing hydrochloroflurorocarbons(HCFCs), which are permitted until January 1, 2020, except ships flying the flag of EU Member States or apply **SRE-EU** notation of the Society.

In relation to the IHM, any installation of materials and changes in ship structure and equipment resulting from the conversion or repair of existing ships after the initial approval are to be documented in a similar procedure as prescribed for new ships, based on MDs and SDoCs. Refer to 31.3.3 and 31.3.4 of this chapter for applicable requirements. The alternative procedure as prescribed in 31.4.2 above is not applicable for new installations.

Part 1 of the Inventory is to be properly updated reflecting the new installations containing hazardous materials listed in Table II 31-2 and relevant changes in ship's structure and equipment.

31.5 Certification, Maintenance and Survey

31.5.1 Introduction

The inventory of hazardous and potentially hazardous materials for ships of new construction and existing ships, are to be developed by the shipyard or shipowner respectively, and submitted to the Society for review.

The hazardous or potentially hazardous materials/substances are to be suitably marked on board the ship to alert all parties of their presence and to facilitate random verification of the submitted documentation by an CR Surveyor.

31.5.2 Certification

Upon completion of the verification surveys, the Statement is issued and the **SRE** and/or **SRE-EU** notation is then assigned to the ship.

31.5.3 Survey

(a) Initial Survey

Once an inventory for a vessel has been developed, an onboard auditing survey by an CR Surveyor is to be carried out to generally verify that the locations and the approximate quantity/volume of hazardous material detailed on the inventory reflect those found on the vessel.

Upon successful completion of the initial survey, the Statement will be issued for a period not exceed 5 years.

(b) Annual Survey

An annual survey is also to be conducted to confirm that the Inventory reflects any modifications, repairs, or changes to the vessel that involve the removal or addition of hazardous materials.

(c) Renewal Survey

A renewal survey is to be carried out at intervals not exceeding 5 years. This survey is to verify that Part I of the IHM is properly maintained and updated to reflect changes in ship structure and equipment.

A new Statement is to be issued by the Society after successful completion of the renewal survey.

(d) Additional Survey

An additional survey, either general or partial, according to the circumstances, may be made at the request of the shipowner after a change, replacement, or significant repair of the structure, equipment, systems, fittings, arrangements and material. The survey is to ensure that any such change, replacement, or significant

repair has been made in the way that the ship continues to comply with the requirements of this chapter, and that Part I of the Inventory is amended as necessary.

Upon successful completion of the additional survey, the Statement will be endorsed.

31.5.4 Maintenance of the Statement

Part 1 of the IHM is to be maintained throughout the ship's life and placed on board the ship. The removal, replacement, or repair of existing equipment or substances previously detailed in Part 1 or the addition of relevant new equipment or substances is to be carefully tracked and is to be specified in the Inventory and suitably marked on board. Any changes to Part 1 of the Inventory are to be recorded so as to provide the current information together with a history of the changes.

An annual verification survey is to be carried out in the course of completing other periodical surveys. Any changes to the materials in the IHM is to be noted by the ship's crew and verified by the attending Surveyor. Upon satisfactory review and verification, the Statement will be endorsed.

31.5.5 Retention of Statement

The Statement is to be retained on board the ship and is to be presented to each subsequent Owner, including those instances where the flag, or type of service changes. Any changes relating to the ship details are to be recorded and updated accordingly. The Continuous Synopsis Record, as detailed in SOLAS Reg. XI-1/5, when combined with the Certificate of Build, as produced by the ship builder are considered as equivalent to the ship details section of the Statement, provided a copy is attached to the Inventory.

Table II 31-1
List of Materials Prohibited or Restricted on New Ships or New Installation

Substances	Agreement/Convention
Asbestos	1974 SOLAS – 2009 Amendments (Reg. II-1/3-5)
Organotin Compounds which act as biocides in antifouling systems (tributyltins (TBT's), Triphenyltins (TET's) and tributyltins Oxide (TBTO's))	International Convention on the Control of Harmful Anti-Fouling Systems on Ships 2001
Ozone Depleting Substances, Chlorofluorocarbons (CFC's)	MARPOL Annex VI Reg. 12 & Montreal Protocol
Polychlorinated biphenyls (PCB's)	Stockholm Convention on Persistent Organic Pollutants (POP's) (Part II)
Perfluorooctane sulfonic acid (PFOS) and its derivatives *	EU 1257/2013
Brominated Flame Retardant (HBCDD) *	EU 1257/2013

* Only apply to ships flying the flag of EU Member States or apply **SRE-EU** notation of the Society.

Table II 31-2
List of Hazardous Wastes and Substances that are Relevant to Ship Recycling

No.	*Materials*		*Inventory*		
			Part 1	*Part 2*	*Part 3*
A. Obligatory for New and Existing Ships					
1	Asbestos		X		
2	Polychlorinated Biphenyls (PCBs)		X		
3	Ozone Depleting Substances	CFCs	X		
		Halons	X		
		Other fully halogenated CFCs	X		
		Carbon Tetrachloride	X		
		1,1,1-Trichloroethane (Methyl Chloroform)	X		
		Hydrochlorofluorocarbons	X		
		Hydrobromofluorocarbons	X		
		Methyl Bromide	X		
		Bromochloromethane	X		
4	Organotin Compounds	Tributyl Tins	X		
		Triphenyl Tins	X		
		Tributyl Tin Oxide (TBTO)	X		
5	Perfluorooctane sulfonic acid (PFOS) and its derivatives *		X		
B. Obligatory for New Ships and New Installations; Voluntary for Existing Ships					
1	Cadmium and Cadmium Compounds		X		
2	Hexavalent Chromium and Hexavalent Chromium Compounds		X		
3	Lead and Lead Compounds		X		
4	Mercury and Mercury Compounds		X		
5	Polybrominated Biphenyl (PBBs)		X		
6	Polybrominated Dephenyl Ethers (PBDEs)		X		
7	Polychloronaphthalanes (more than 3 chlorine atoms)		X		
8	Radioactive Substances		X		
9	Certain Shortchain Chlorinated Paraffins (Alkanes, C10-C13, chloro)		X		
10	Brominated Flame Retardant (HBCDD) *		X		
C. Regular Consumable Goods					
1	Household appliances	Refrigerators, Freezers, Microwaves, Toasters, Fryers, Coffee machines, Other appliances used for cooking including Cutlery, Pans, Chinaware, Cups and Glasses, Washing machines, Clothes dryers, Dish washing machines, Irons, Vacuum cleaners, hairdryers			X
2	IT and telecommunications equipment	Personal computers, Notebook computers, Typewriters, Printers, Copying equipment, Pocket and desk calculators, Facsimile, Telephones, Remote controls			X
3	Consumer equipment	Radio sets, Television sets, Video cameras, Video recorders, Musical instruments, Gambling Machines			X
4	Lighting equipment	Fluorescent lamps, Filament bulbs, lamps			X
5	Electrical and electronic tools	Drills, Saws, Sewing machines			X
6	Leisure and sports equipment	Video games, Karaoke machine, Sports equipment			X
7	Non ship-specific furniture, Interior and similar equipment	Chairs, Sofas, Tables, Beds, Curtains, Carpets, Garbage bins, Bedlinen, Pillows, Towels, Mattresses, Storage racks, Decoration, Bathroom installations, Toys, not structurally relevant or integrated artwork			X

* Only apply to ships flying the flag of EU Member States or apply **SRE-EU** notation of the Society.

Table II 31-3
Potentially Hazardous Materials which may be Onboard Ships Delivered to Recycling Facilities

No.	*Properties*		*Goods*	*Inventory*		
				Part 1	*Part 2*	*Part 3*
1	Liquid	Oiliness	Kerosene			X
2			White Spirit			X
3			Lubricating Oil			X
4			Hydraulic Oil			X
5			Anti-seize Compounds			X
6			Fuel Additives			X
7			Engine Coolant Additives			X
8			Antifreeze Fluids			X
9			Boiler and Feed Water Treatment and Test Re-agents			X
10			De-ionizer Regenerating Chemicals			X
11			Evaporator Dosing and Descaling Acids			X
12			Paint Stabilizers/Rust Stabilizers			X
13			Solvents/Thinners			X
14			Paints			X
15			Chemical Refrigerants			X
16			Battery Electrolyte			X
17			Alcohol, Methylated Spirits			X
18	Gas	Explosives/ Inflammables	Acetylene			X
19			Propane			X
20			Butane			X
21			Oxygen			X
22		Greenhouse Gases	CO_2			X
23			Perfluorocarbons (PFCs)			X
24			Methane			X
25			Hydrofluorocarbon (HFCs)			X
26			Nitrous Oxide (N_2O)			X
27			Sulfur Hexafluoride (SF_6)			X
28	Liquid	Oiliness	Bunkers: Fuel Oil			X
29			Grease			X
30			Waste Oil (Sludge)		X	
31			Bilge		X	
32			Oily Liquid Cargo Tank Residues		X	
33			Ballast Water		X	
34			Raw Sewage		X	
35			Treated Sewage		X	
36			Non-oily Liquid Cargo Residues		X	
37	Gas	Explosibility/ Inflammability	Fuel Gas			X

Table II 31-3
Potentially Hazardous Materials which may be Onboard Ships Delivered to Recycling Facilities (continued)

No.	*Properties*	*Goods*	*Inventory*		
			Part 1	*Part 2*	*Part 3*
38	Solid	Dry Cargo Residues		X	
39		Medical Waste/Infectious Waste		X	
40		Incinerator Ash(1)		X	
41		Garbage(1)		X	
42		Fuel Tank Residues		X	
43		Oily Solid Cargo Tank Residues		X	
44		Oily/Contaminated Rags		X	
45		Batteries (incl. Lead Acid Batteries)			X
46		Pesticides/Insecticide Sprays			X
47		Extinguishant			X
48		Chemical Cleaner (incl. Electrical Equipment Cleaner, Carbon Remover)			X
49		Detergent/Bleach (could be a liquid)			X
50		Miscellaneous Medicines			X
51		Fire Fighting Clothing, Equipment			X
52		Dry Tank Residues		X	
53		Cargo Residues		X	
54		Spare parts which contain materials listed in Table II 31-2: A or B			X

Note:

(1) Definition of "Garbage" is identical with that of MARPOL Annex V. However, "Incinerator Ash" is classified separately because it may include hazardous substances or heavy metals.

Table II 31-4
Threshold Levels of Chemical Substances to be Listed in the Inventory

No.	*Materials*		*Threshold Level*
A. Obligatory for New and Existing Ships			
1	Asbestos		0.1%(1)
2	Polychlorinated Biphenyls (PCBs)		50 mg/kg(2)
3	Ozone Depleting Substances	CFCs	No threshold level(3)
		Halons	
		Other fully halogenated CFCs	
		Carbon Tetrachloride	
		1,1,1-Trichloroethane (Methyl Chloroform)	
		Hydrochlorofluorocarbons	
		Hydrobromofluorocarbons	
		Methyl Bromide	
		Bromochloromethane	
4	Organotin Compounds	Tributyl Tins	2500 mg/kg(4)
		Triphenyl Tins	
		Tributyl Tin Oxide (TBTO)	
5	Perfluorooctane sulfonic acid (PFOS) and its derivatives(5)		10 mg/kg (0.001% m/m)(6)
B. Obligatory for New Ships and New Installations; Voluntary for Existing Ships			
1	Cadmium and Cadmium Compounds		100 mg/kg(7)
2	Hexavalent Chromium and Hexavalent Chromium Compounds		1000 mg/kg(7)
3	Lead and Lead Compounds		1000 mg/kg(7)
4	Mercury and Mercury Compounds		1000 mg/kg(7)
5	Polybrominated Biphenyl (PBBs)		50 mg/kg(8)
6	Polybrominated Dephenyl Ethers (PBDEs)		1000 mg/kg(7)
7	Polychloronaphthalanes (more than 3 chlorine atoms)		50 mg/kg(9)
8	Radioactive Substances		No threshold level(10)
9	Certain Shortchain Chlorinated Paraffins (Alkanes, C10-C13, chloro)		1%(11)
10	Brominated Flame Retardant (HBCDD)(5)		100 mg/kg

Note:

(1) In accordance with regulation 4 of the Convention, for all ships, new installation of materials which contain asbestos are to be prohibited. According to the UN recommendation "Globally Harmonized System of Classification and Labelling of Chemicals (GHS)" adopted by the United Nations Economic and Social Council's Sub-Committee of Experts on the Globally Harmonized System of Classification and Labelling of Chemicals (UNSCEGHS), the UN's Sub-Committee of Experts, in 2002 (published in 2003), carcinogenic mixtures classified as Category 1A (including asbestos mixtures) under the GHS are required to be labelled as carcinogenic if the ratio is more than 0.1%. However, if 1% is applied, this threshold value should be recorded in the Inventory and, if available, the Material Declaration and can be applied not later than 5 years after the entry into force of the Convention. The threshold value of 0.1% need not be retroactively applied to those Inventories and Material Declarations.

(2) In accordance with regulation 4 of the Convention, for all ships, new installation of materials which contain PCBs are to be prohibited. The Organization set 50 mg/kg as the threshold value referring to the concentration level at which wastes, substances and articles containing, consisting of or contaminated with PCB are characterized as hazardous under the Basel Convention.

(3) "No threshold value" is in accordance with the Montreal Protocol for reporting ODS. Unintentional trace contaminants should not be listed in the Material Declarations and in the Inventory.

(4) This threshold value is based on the Guidelines for brief sampling of anti-fouling systems on ships (resolution MEPC.104(49)).

(5) Only apply to ships flying the flag of EU Member States or ships assigned **SRE-EU** notation by the Society.

(6) Concentrations of PFOS above 10 mg/kg (0.001% by weight) when it occurs in substances or in preparations or concentrations of PFOS in semi-finished products or articles, or parts thereof equal to or above than 0.1% by weight calculated with reference to the mass of structurally or micro-structurally distinct parts that contain PFOS or for textiles or other coated materials, if the amount of PFOS is equal to or above than 1 μg/m² of the coated material.

(7) The Organization set this as the threshold value referring to the Restriction of Hazardous Substances (RoHS Directive 2011/65/EU, Annex II).

(8) The Organization set 50 mg/kg as the threshold value referring to the concentration level at which wastes, substances and articles containing, consisting of or contaminated with PBB are characterized as hazardous under the Basel Convention.

(9) The Organization set 50 mg/kg as the threshold value referring to the concentration level at which wastes, substances and articles containing, consisting of or contaminated with PCN are characterized as hazardous under the Basel Convention.

(10) All radioactive sources should be included in the Material Declaration and in the Inventory. Radioactive source means radioactive material permanently sealed in a capsule or closely bonded and in a solid form that is used as a source of radiation. This includes consumer products and industrial gauges with radioactive materials. Examples are listed in MEPC.269(68) appendix 10.

(11) The Organization set 1% as the threshold value referring to the EU legislation that restricts Chlorinated Paraffins from being placed on the market for use as substances or as constituents of other substances or preparations in concentrations higher than 1% (EU Regulation 1907/2006, Annex XVII Entry 42 and Regulation 519/2012).

Table II 31-5
Standard Format of the Inventory of Hazardous Materials

Part 1 Hazardous materials contained in the ship's structure and equipment

1.1 Paints and coating systems containing materials listed in A and B of Table II 31-2

No.	*Application of Paint*	*Name of Paint*	*Location*	*Materials*	*Approx. Quantity*	*Remarks*
1	Anti-drumming compound	Primer, xx Co., xx Primer #300	Hull part	Lead	30 kg	
2	Antifouling	xx Co. xx coat #100	Underwater parts	TBT	20 kg	

1.2 Equipment and machinery containing materials listed in A and B of Table II 31-2

No.	*Name of Equipment and Machinery*	*Location*	*Materials*	*Parts of Use*	*Approx. Quantity*	*Remarks*
1	Switchboard	Engine Control Room	Lead	Solder and electric contact	200 mg	
			Mercury	Heat gauge	10 mg	
~~2~~	~~Diesel Engine, xx Co., xx #150~~	~~Engine Room~~	~~LeadCadmium~~	~~BearingStarter for blower~~	~~50 mg~~	
3	Diesel Engine, xx Co., xx #200	Engine Room	Lead	Starter for blower	0.01 kg	Revised by XXX on Oct. XX, 2008 (revoking No. 2)
4	Diesel generator (x 3)	Engine Room	Lead	Ingredient of copper compounds	0.01 kg	
5	Radioactive level gauge	No. 1 Cargo tank	Radioactive substances	Gauge	5 Ci (1.8E+11) (Bq)	Radionuclides: ^{60}Co

1.3 Structure and hull containing materials listed in A and B of Table II 31-2

No.	*Name of Structural Element*	*Location*	*Materials*	*Parts of Use*	*Approx. Quantity*	*Remarks*
1	Wall Panel	Accommodation	Asbestos	Insulation	2 t	
2	Wall Insulation	Engine Control Room	Lead	Perforated plate	200 mg	Cover of insulation material
			Asbestos	Fire protection	25 kg	Under lead containing plates

Part 2 Operationally generated waste

No.	*Location*(1)	*Name of Item and Detail (if any) of the Item*	*Approx. Quantity*	*Remarks*
1	Garbage Locker	Garbage (FOOD Waste)	30 kg	
2	Bilge Tank	Bilge Water	10 m^3	
3	No. 1 Cargo Hold	Dry Cargo Residues (Iron ore)	100 kg	
4	No. 2 Cargo Hold	Waste Oil (Sludge) (Crude)	100 kg	
5	No. 1 Ballast Tank	Ballast Water	100 m^3	
		Sediments	200 kg	

Table II 31-5
Standard Format of the Inventory of Hazardous Materials (continued)

Part 3 Stores						
3.1 Stores						
No.	***Location(1)***	***Name of Item***	***Unit Quantity***	***Figure***	***Approx. Quantity***	***Remarks(2)***
1	No. 1 Fuel Oil Tank	Fuel Oil (Heavy Fuel Oil)	---	---	100 m^3	
2	CO_2 Room	CO_2	100 kg	50 pcs	5000 kg	
3	Workshop	Propane	20 kg	10 pcs	200 kg	
4	Medicine Locker	Miscellaneous Medicines	---	---	---	Details are shown in the attached list
5	Paint Stores	Paint, xx Co., #600	20 kg	5 pcs	100 kg	Cadmium containing
3.2 Liquids sealed in ship's machinery and equipment						
No.	***Type of Liquids***	***Name of Machinery or Equipment***	***Location(1)***		***Approx. Quantity***	***Remarks***
1	Hydraulic Oil	Deck crane hydraulic oil system	Upper Deck		100 ltr	
		Deck machinery hydraulic oil system	Upper Deck and Bosun Store		2000 ltr	
		Steering gear hydraulic oil system	Steering Gear Room		500 ltr	
2	Lubricating Oil	Main engine system	Engine Room		50 ltr	
3	Boiler Water Treatment	Boiler	Engine Room		10 ltr	
3.3 Gases sealed in ship's machinery and equipment						
No.	***Type of Gases***	***Name of Machinery or Equipment***	***Location***		***Approx. Quantity***	***Remarks***
1	HFC	AC system	AC Room		100 kg	
		Refrigerated provision chamber machine	AC Room		50 kg	
3.4 Regular consumable goods						
No.	***Location(1)***	***Name of Item***	***Manufacturer***		***Quantity***	***Remarks***
1	Accommodation	Refrigerators	xx Co.		1	
2	Accommodation	Personal computers	xxx Co.		2	
3	Accommodation	Vacuum cleaners	xxxx Co.		1	
4	Accommodation	Office chairs	xxxxx Co.		1	

Notes:

(1) About Locations of Part 2 and Part 3, each item should be entered in order based on its location from a lower level to an upper level and from a fore part to an aft part for respective subparts. The location of Part 1 items is recommended to be described similarly, as far as practicable.

(2) About Remarks of Part 3, if hazardous materials are integrated in products, the approximate amount of the contents should be shown as far as possible.

Chapter 32

Pollution Prevention Notations For Vessels

32.1 General

32.1.1 Application

Additional class notations **PP**, **BWM** and **EEDI** may be assigned to ships so designed and equipped as to control and limit the emission of polluting substances in the sea and the air, in accordance with the requirements given in this chapter.

32.1.2 Certificates

The certificates to be submitted prior to the delivery of the additional class notations **PP**, **BWM** and **EEDI** are listed in Table II 32-1.

32.2 PP Notation

32.2.1 Control of discharges into the sea

This section addresses requirements aimed towards the prevention of pollution to the sea environment discharged from vessels.

(a) Oil discharges

This subsection aimed at reducing the potential adverse effects on the sea environment by oil discharges from vessels.

(i) Machinery spaces

Vessels are to hold and maintain a valid IOPP Certificate with Form A in accordance with the requirements of MARPOL Annex I, Regulations for the Prevention of Pollution by Oil.

(ii) Cargo area

Vessels designed or adapted to carry a cargo of oil and/or oil product in bulk are to hold and maintain a valid IOPP Certificate with Form B in accordance with the requirements of MARPOL Annex I.

(b) Noxious liquid substances

This subsection aimed towards the prevention of pollution to the sea environment by noxious liquid substances (NLS) from vessels.

Vessels designed or adapted to carry a cargo of NLS in bulk are to hold and maintain a valid NLS Certificate in accordance with the requirements of MARPOL Annex II, Regulations for the Control of Pollution by Noxious Liquid Substances in Bulk.

(c) Sewage

This subsection aimed at reducing the potential adverse effects on the sea environment by sewage from vessels.

Vessels are to comply with the requirements of MARPOL Annex IV, Regulations for the Prevention of Pollution by Sewage from Ships.

(d) Garbage

This subsection aimed towards the prevention of pollution to the sea environment by garbage discharges from vessels.

Vessels are to comply with the requirements of MARPOL Annex V, Regulations for the Prevention of Pollution by Garbage from Ships.

(e) Anti-fouling systems

This subsection aimed at reducing the potential adverse effects of introducing organotin compounds to the sea environment by anti-fouling systems of vessels. Vessels of 400 gross tons and above are to hold and maintain a valid IAFS Certificate in accordance with the requirements of the AFS Convention. Vessels of 24 meters or more in length, but less than 400 gross tons, are to hold and maintain a valid Declaration on Anti-Fouling System in accordance with the requirements of the AFS Convention.

32.2.2 Control of discharges into the Air

This section addresses requirements aimed towards the prevention of pollution to the air environment discharged from vessels.

(a) Nitrogen Oxides (NOx) emission

This subsection aimed towards the prevention of pollution to the air environment by nitrogen oxides from vessels.

Vessels are to comply with the requirements of Regulation 13 of MARPOL Annex VI, Regulations for the Prevention of Air Pollution from Ships, and the NOx Technical Code, 2008.

(b) Sulfur Oxides (SOx) emission

This subsection aimed towards the prevention of pollution to the air environment by sulfur oxides from vessels.

Vessels are to comply with the requirements of Regulation 14 and 18 of MARPOL Annex VI.

(c) Incinerators

This subsection aimed towards the prevention of pollution to the air environment from vessels by incinerators.

Where installed onboard, incinerators are to be type-approved in accordance with IMO Resolution MEPC.244(66), Standard Specification for Shipboard Incinerators.

Onboard incineration is to conform to Regulation 16 of MARPOL Annex VI.

Incineration of any garbage, as defined by Annex V, excluding those contain more than traces of heavy metals, is to be recorded in the Garbage Record Book in accordance with MARPOL Annex V.

(d) Ozone depleting substances (ODS)

This subsection aimed towards the prevention of pollution to the air environment by ozone depleting substances from vessels.

Vessels are to comply with the requirements of Regulation 12 of MARPOL Annex VI.

(i) Refrigerant Systems

The requirements of this subsection are applicable to refrigerant systems onboard vessels, excluding permanently sealed equipment, where there are no refrigerant charging connections or potentially removable components containing ozone depleting substances. Refrigerant systems are to be provided with environmentally friendly refrigerants in accordance with the requirements of Regulation 12 of MARPOL Annex VI. Furthermore, the use of refrigerants with global warming potential (GWP) greater than 3000 are prohibited. Annual refrigerant leakage is to be not more than 10% of the total refrigerant charge of each system. An appropriate leak detection system is to be provided to continuously monitor spaces into which the refrigerant could leak. Further, an alarm is to be given in a manned location when the refrigerant concentration exceeds a predetermined limit (for example, 25 ppm for ammonia or 300 ppm for halogenated fluorocarbons).

(ii) Fire-fighting Systems

This subsection addresses requirements aimed at reducing the potential adverse effects on the air environment by fire-fighting systems onboard vessels. The use of Halons or perfluorocarbon mediums is not permitted in fixed fire extinguishing systems or portable fire extinguishers. Alternative mediums to Halons or perfluorocarbons may be acceptable, provided they contain no ozone depleting substances or have a GWP less than 4000.

32.3 BWM Notation

This subsection aimed towards the prevention of transporting harmful aquatic organisms and pathogens via water ballast from vessels. Vessels are to comply with the relevant requirements of International Convention for the Control and Management of Ships Ballast Water and Sediments, 2004.

32.4 EEDI and SEEMP Notations

This subsection aimed towards the prevention of pollution to the air environment by excessive carbon dioxide from vessels. Vessels are to comply with the requirements of Regulation 19 to 22 of MARPOL Annex VI.

Table II 32-1
Required Certificates

Certificates	**In accordance with:**	**PP, BWM, EEDI and SEEMP notations**
IOPP certificate	Annex I of MARPOL 73/78	R
Certificates of type approval for: •15 ppm bilge separator •15 ppm bilge alarm	IMO Resolution MEPC.107(49): •Appendix 1 •Appendix 2	 R R
NLS certificate	Annex II of MARPOL 73/78	R, where applicable
ISPP certificate	Annex IV of MARPOL 73/78	R
Type approval certificate of the sewage system	IMO Resolution MEPC.227(64)	R
Incinerator type approval certificate	IMO Resolution MEPC.244(66) as amended by resolution MEPC.93(45) Annex VI of MARPOL 73/78	R(1)
IAPP certificate	Annex VI of MARPOL 73/78	R
EIAPP certificate	NOx Technical Code, 2008	R
IAFS certificate or Declaration on AFS	International Convention on the control of harmful anti-fouling systems on ships, 2001	R
International Energy Efficiency (IEE) Certificate	Annex VI of MARPOL 73/78	R
BWM certificate	International Convention for the Control and Management of Ships Ballast Water and Sediments, 2004	R

Note:
"R" means that a certificate is required.
(1) Shipboard incinerator is not required. However, when fitted onboard, it is to be type-approved.

Chapter 33
Sloshing

33.1 General

33.1.1 This Chapter applies to all liquid cargo, ballast tanks and other tanks with volume exceeding 100 m^3, but does not apply to the water ballast cargo hold of bulk carriers.

33.1.2 The sections 33.2 to 33.5 in this Chapter apply to steel hull structures for ships with length 100 meters and above. The section 33.6 applies to steel hull structures for ships with length less than 100 meters.

33.1.3 Sloshing is the phenomenon occurring in the partially filled tank due to liquid motion in the tank. The phenomenon may cause impulsive local load and cause critical damage on tank structure.

33.2 Design Loads for Sloshing

33.2.1 The sloshing pressures given in 33.2.2, 33.2.3 and 33.2.6 are to be considered together with the general structural strength formulae given in 33.3, 33.4 and 33.5. The impact pressures p_i given in 33.2.4 to 33.2.7 are to be used together with impact structural strength formulae given in 33.5.6.

33.2.2 General

(a) Tanks for crude oil or bunkers are normally to be designed for liquids of density equal to that of sea water, taken as ρ = 1.025 t/m^3. Tanks for heavier liquids may be approved after special consideration.

(b) The minimum sloshing pressure on web frames and girder panels in cargo and ballast tanks, except ballast tanks in double side and double bottom, is to be taken as 20 kN/m^2. In double side and double bottom ballast tanks, the minimum sloshing pressure is to be taken as 12 kN/m^2. In long or wide tanks with many web frames or girders, the sloshing pressure on the frames or girders located within $0.25l_s$ ($0.25b_s$) from the wash or end bulkheads is to be taken as:

$$p = p_{bhd-lng}\left(1 - \frac{s}{l_s}\right)^2 \quad \text{kN/m}^2 \quad \text{for web frames}$$

$$p = p_{bhd-t}\left(1 - \frac{s}{b_s}\right)^2 \quad \text{kN/m}^2 \quad \text{for longitudinal girders}$$

where:

$p_{bhd-lng}, p_{bhd-t}$	=	Longitudinal and transverse sloshing pressure on wash or end bulkheads as given in 33.2.3
s	=	Distance, in m, from bulkhead to web frame or girder considered.
l_s	=	As given in 33.2.3.
b_s	=	As given in 33.2.3.

(c) Tanks with free sloshing breadth $b_s > 0.56B$ will be subject to specified restrictions on maximum GM. In addition such tanks and/or tanks with a sloshing length such that $0.13L < l_s < 0.16L$ may be designed for specified restrictions in filling height. where b_s and l_s are as given in 33.2.3.

33.2.3 Sloshing pressure on bulkheads

The sloshing pressure in way of transverse bulkheads including wash bulkheads due to longitudinal liquid motion, $p_{bhd-lng}$, in kN/m^2, for a particular filling level, is to be taken as: (including top of tank located within $0.25l_s$ from the wash or end bulkheads) (see Fig. II 33-3)

$$p_{bhd-lng} = \rho g_0 l_s k_f \left[0.4 - \left(0.39 - \frac{1.7l_s}{L}\right)\frac{L}{350}\right] \qquad kN/m^2$$

The sloshing pressure in way of longitudinal bulkheads including wash bulkheads due to transverse liquid motion, p_{bhd-t}, in kN/m^2, for a particular filling level, is to be taken as: (including top of tank located within $0.25b_s$ from the wash or end bulkheads) (see Fig. II 33-3)

$$p_{bhd-t} = 7\rho g_0 k_f \left(\frac{b_s}{B} - 0.3\right) GM^{0.75} \qquad kN/m^2$$

where:

g_0	=	9.81 m/s^2, standard acceleration of gravity
k_f	=	$1 - 2\left(0.7 - \frac{h}{H}\right)^2$, maximum = 1, and $\left(\frac{h}{H}\right)_{max} = 1$
h	=	Filling height, in m
H	=	Tank height. in m, within 0.15 l_s or 0.15 b_s
GM	=	Maximum GM including correction for free surface effect. $GM_{minimum}$ = 0.12 B (m)
l_s	=	Effective sloshing length, in m, given as:
	=	$\frac{(1+n_t\alpha_t)(1+\beta_t n_2)l}{(1+n_t)(1+n_2)}$ for end bulkheads
	=	$\frac{[1+\alpha_t(n_t-1)](1+\beta_t n_2)l}{(1+n_t)(1+n_2)}$ for wash bulkheads
b_s	=	Effective sloshing breadth, in m, given as:
	=	$\frac{(1+n_l\alpha_l)(1+\beta_l n_4)b}{(1+n_l)(1+n_4)}$ for tank sides
	=	$\frac{[1+\alpha_l(n_l-1)](1+\beta_l n_4)b}{(1+n_l)(1+n_4)}$ for wash bulkhead
l	=	Tank length, in m
b	=	Tank breadth, in m
n_t	=	Number of transverse wash bulkheads in the tank with $\alpha_t < 0.5$
α_t	=	Ratio between openings in transverse wash bulkhead and total transverse area in the tank below considered filling height, see Fig. II 33-1. If no restriction to filling height, h is taken as 0.7 H.

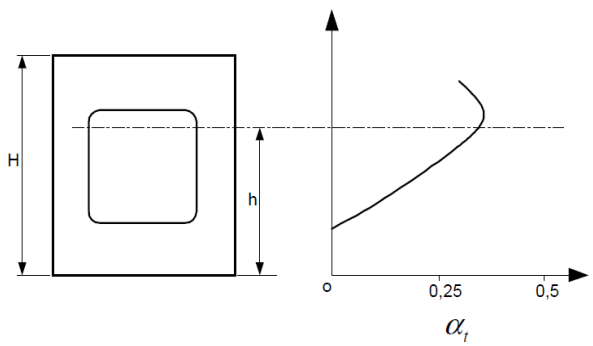

Fig. II 33-1
Wash Bulkhead Coefficient

n_2 = $\frac{l}{1+n_t}$, number of transverse web-ring frames in the tank over the length.

β_t = Ratio between openings in web-ring frames and total transverse area in the tank below considered filling height, see Fig. II 33-2.
If no restriction to filling height, h is taken as 0.7 H.

n_l = Number of longitudinal wash bulkheads in the tank with $\alpha_l < 0.5$

α_l = Similar to α_t but taken for longitudinal wash bulkhead.

n_4 = $\frac{b}{1+n_l}$, number of longitudinal ring-girders in the tank between the breadth.

β_l = Similar to β_t taken for longitudinal ring-girders.

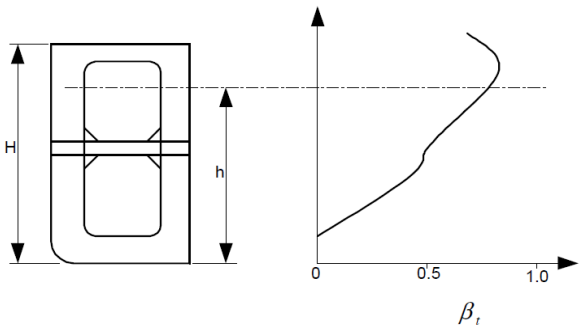

Fig. II 33-2
Webframe Coefficient

33.2.4 Impact pressure in upper part of tanks

Tanks with free sloshing length $0.13L < l_s < 0.16L$ or with free sloshing breadth $b_s > 0.56B$ will generate an impact pressure on horizontal and inclined surfaces adjacent to vertical surfaces in upper part of the tank due to high liquid velocities meeting these surfaces. For horizontal or inclined panels (deck, horizontal stringers etc.), the impact pressure on upper parts of the tank may be taken as:

Within $0.15l_s$ from transverse wash or end bulkheads:

$$p_i = \rho g_0 k_f \left(\frac{220 l_s}{L} - 7.5\right) \sin^2\gamma \qquad \text{kN/m}^2 \qquad \text{for } \frac{l_s}{L} \le \frac{350+L}{3550}$$

$$p_i = \rho g_0 k_f \left(25 + \frac{L}{13}\right)\left(0.5 + \frac{l_s}{L}\right) \sin^2\gamma \qquad \text{kN/m}^2 \qquad \text{for } \frac{l_s}{L} > \frac{350+L}{3550}$$

Within 0.15 b_s from longitudinal wash bulkheads and tank sides:

$$p_i = \frac{240 \rho g_0 k_f}{B}\left(\frac{b_s}{B} - 0.3\right) GM^{1.5} \sin^2\gamma \qquad \text{kN/m}^2$$

Outside $0.15l_s$ and $0.15b_s$ the pressure may be reduced to zero at $0.3l_s$ and $0.3b_s$, respectively, see Fig. II 33-3. In tank corners within 0.15 l_s and 0.15 b_s the impact pressure is not to be taken smaller than p_i (transversely) or p_i (longitudinally) + 0.4 p_i (transversely).

The reflected impact pressure on vertical surfaces adjacent to horizontal or inclined surfaces above will have an impact pressure linearly reduced to 50% of the pressure above, 0.1 l_s or 0.1 b_s (m) below. l_s, b_s and GM are as given in 33.2.3.

k_f = $1 - 4\left(0.6 - \frac{h}{H}\right)^2$, maximum = 1, and $\left(\frac{h}{H}\right)_{max} = 1$

h = Maximum allowable filling height, in m

H = Tank height, in m, within 0.15 l_s or 0.15 b_s

γ = Angle between considered panel and the vertical.

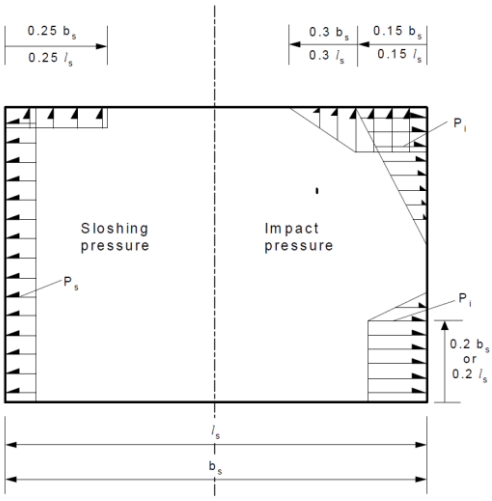

Fig. II 33-3
Pressure Distribution

33.2.5 Impact pressure in lower part of smooth tanks

In larger tanks (l_s > 0.13 L or b_s > 0.56 B) with double bottom and which have no internal transverse or longitudinal girders restraining the liquid movement at low minimum filling heights (2 < h < 0.2 l_s or 2 < h < 0.2 b_s) the impact pressure on vertical and inclined tank surfaces is not to be taken less than:

$p_i = 1.42\rho g_0 k l_s \sin^2\delta$ kN/m² on transverse bulkheads up to a height of $0.2l_s$
$p_i = 1.5\rho g_0 b_s \sin^2\delta$ kN/m² on longitudinal bulkheads up to a height of $0.2b_s$

The impact pressure may be reduced to zero 1 meter above the heights given, see Fig. II 33-3.

In tank corners at outermost side of transverse bulkheads the impact pressure within 0.15 b_s is not to be taken smaller than:

$p_i(\text{longitudinally}) + 0.4p_i(\text{transversely})$

If the tank is arranged with a horizontal stringer within the height h < 0.2 l_s or h < 0.2 b_s a reflected impact pressure of the same magnitude as on adjacent transverse or longitudinal bulkhead is to be used on the under side of the stringer panel.

l_s and b_s are free sloshing length and breadth, in m, at height considered, as given in 33.2.3.

k	=	1	for L < 200
	=	1.4 – 0.002L	for L > 200
δ	=	Angle between the lower boundary panel and the horizontal.	

33.2.6 For tanks with upper panels higher than L/20 m above lowest seagoing waterline the sloshing and impact pressures given in 33.2.3 and 33.2.4 are to be multiplied by the following magnification factors:

1 + 6 z_e/L for longitudinal sloshing
1 + 7.5 z_e GM/B² for transverse sloshing
1 + 18 z_e/L for longitudinal impact
1 + 17.5 z_e GM/B² for transverse impact

where:

z_e	=	$z_t - T_s$ – L/20	m
z_t	=	Distance from baseline to panel consider, in m	

T_s	=	Lowest seagoing draught, in m, T_s = 0.50 T may normally be used.
T	=	Mean moulded summer draught ,in m.

33.2.7 For tanks with smooth boundaries (no internal structural members) with tank bottom higher than the D/2, the low filling impact pressure as given in 33.2.5 is to be multiplied by the following magnification factor:

$$\left(1+\frac{2z_i\theta}{l_s}\right)^2 \quad \text{in longitudinal direction}$$

$$\left(1+\frac{2z_i\phi}{b_s}\right)^2 \quad \text{in transverse direction}$$

z_i	=	Distance from panel considered to D/2, in m
D	=	Moulded depth defined as the vertical distance in m from baseline to moulded deckline at the uppermost continuous deck measured amidships.
θ	=	Pitch angle in radian.
ϕ	=	Rolling angle in radian.

The roll angle (single amplitude) is given by:

$$\phi = \frac{50c}{B+75} \quad \text{rad}$$

where:

c	=	(1.25 – 0.025 T_R) k	
k	=	1.2	for ships without bilge keel
	=	1.0	for ships with bilge keel
	=	0.8	for ships with active roll damping facilities
T_R	=	The period of roll, not to be taken greater than 30	
k_r	=	Roll radius of gyration, in m	
GM	=	Metacentric height, in m.	
T_R	=	$\frac{2k_r}{\sqrt{GM}}$ sec	

The values of k_r and GM to be used are to give the minimum realistic value of T_R for the load considered.

In case k_r and GM have not been calculated for such condition, the following approximate design values may be used:

k_r	=	0.39 B	for ships with even transverse distribution of mass
	=	0.35 B	for tankers in ballast
	=	0.25 B	for ships loaded with ore between longitudinal bulkheads
GM	=	0.07 B	in general
	=	0.12 B	for tankers and bulk carriers.
	=	0.05 B	for container ship with B < 32.2 m
	=	0.08 B	for container ship with B > 40.0 m
		with interpolation for B in between.	

The pitch angle is given by:

$$\theta = 0.25\frac{a_0}{C_b} \quad \text{rad}$$

where:

a_0	=	A common acceleration parameter is given by:	
	=	$\frac{3C_1}{L} + C_V C_{V1}$	
C_1	=	0.0792 L	for L ≤ 90, Coefficient of ship length as specified in 3.2.2 of this Part.
C_V	=	$\frac{\sqrt{L}}{50}$, maximum 0.2	

$$C_{V1} = \frac{V}{\sqrt{L}}, \text{minimum } 0.8$$

33.3 Side Structures Subjected to Sloshing

33.3.1 Design Load for Sloshing

The design load of side structures for sloshing is not to be less than that obtained from the formula as given in 33.2.3. The sloshing pressure defined in 33.2.3 is to be taken as a constant value over the full tank depth and is to be taken as the greater of the sloshing pressures calculated for filling levels from 0.05 H_{max} to 0.95 H_{max}, in 0.05 H_{max} increments. For tanks with free breadth b_s > 0.56B, the design pressure will be specially considered according to 33.2.2(c).

33.3.2 Side plating

The thickness requirement corresponding to lateral pressure is given by:

$$t = \frac{15.8 k_a s \sqrt{p}}{\sqrt{\sigma}} + t_c \qquad \text{mm}$$

where:

p	=	Design load for sloshing as given in 33.3.1
t_c	=	Corrosion addition, plates, stiffeners and girders in tanks for water ballast and or cargo oil is to be given a corrosion addition t_c as stated in Table II 33-1.
k_a	=	Correction factor for aspect ratio of plate field
	=	$(1.1 - 0.25\ s/\ l)^2$
	=	maximum 1.0 for s/ *l* = 0.4
	=	minimum 0.72 for s/ *l* = 1.0
l	=	stiffener span, in m
s	=	Stiffener spacing, in m, measured along the plating
σ	=	140/K for longitudinally stiffened side plating at neutral axis, within 0.4 L amidship
	=	120/K for transversely stiffened side plating at neutral axis, within 0.4 L amidship. Above and below the neutral axis, the σ-values are to be reduced linearly to the values for the deck and bottom plating, assuming the same stiffening direction and material factor K as for the plating considered.
	=	160/K within 0.05 L from F.P. and 0.1 L from A.P.
K	=	The material factor K as specified in 1.5.2(a) of this Part.

Between specified regions the σ-value may be varied linearly.

33.3.3 Longitudinals

The section modulus requirement is given by:

$$Z = \frac{83 l^2 s p w_k}{\sigma} \qquad \text{cm}^3, \text{minimum } 15 \text{ cm}^3$$

where:

p	=	Design load for sloshing as given in 33.2.2(b)
l	=	Stiffener span, in m
s	=	Stiffener spacing, in m, measured along the plating
w_k	=	Section modulus corrosion factor in tanks

For stiffeners where formulae are given in the rules with the w_k increase in section modulus for compensation of the corrosion addition (t_c).

For rolled sections the section modulus requirement may be multiplied by a corrosion factor w_k, given by the following approximation:

w_k	=	Section modulus corrosion factor in tanks
	=	$1 + 0.05(t_{kw} + t_{kf})$ for flanged sections

= $1 + 0.06t_{kw}$ for bulbs

t_{kw} = Corrosion addition t_c as given in 33.3.2 with respect to the profile web.

t_{kf} = Corrosion addition t_c as given in 33.3.2 with respect to the profile flange.

For flat bars the corrosion addition t_c may be added directly to the thickness.

σ = Allowable stress within 0.4 L amidships is given by:

= $\frac{225}{K} - 130f_2\frac{z_n - z_a}{z_n}$, maximum $\frac{160}{K}$

= $160/K$ for others

Between specified regions the σ-value may be varied linearly.

z_n = Vertical distance, in m, from the baseline or deck line to the neutral axis of the hull girder, whichever is relevant.

z_a = Vertical distance, in m, from the baseline or deck line to the point in question below or above the neutral axis, respectively.

f_2 = Stress factor f_{2b}, below the neutral axis of the hull girder, depending on surplus in midship section modulus and maximum value of the actual still water bending moments:

f_{2b} = $\frac{5.7(M_S + M_W)}{Z_B}$

f_2 = Stress factor f_{2d}, above the neutral axis of the hull girder, depending on surplus in midship section modulus and maximum value of the actual still water moments:

f_{2d} = $\frac{5.7(M_S + M_W)}{Z_D}$

Z_B = Midship section modulus, in cm^3, at bottom as built

Z_D = Midship section modulus, in cm^3, at deck as built

M_S = Normally to be taken as the largest design still water bending moment, in kNm.

M_W = Rule wave bending moment, in kNm, is given in 3.2.2 of this Part.

33.3.4 Main frames

(a) Main frames are frames located outside the peak tanks, connected to the floors, double bottom or hopper tanks and extended to the lowest deck, stringer or top wing tank on the ship side.

(b) The section modulus requirement is given by:

$$Z = KCl^2spw_k \qquad cm^3$$

where:

p = Design load for sloshing as given in 33.2.2(b)

C = 0.43

l = Corresponding to full length of frame including brackets, in m

s = Stiffener spacing, in m, measured along the plating

(c) The requirement given in (b) is based on the assumption that effective brackets are fitted at both ends. The length of brackets is not to be less than:

0.12 l for the lower bracket.
0.07 l for the upper bracket.

The section modulus of frame, including bracket, at frame ends is not to be less than as given in 33.3.4(b) with l equal to total span of frame including brackets and applying C-factors as given below.

Upper end:
C = 0.64 when internal pressure (p) is used.
Lower end:
C = 0.86 when internal pressure (p) is used.

When the length of the free edge of the bracket is more than 40 times the plate thickness, a flange is to be fitted, the width being at least 1/15 of the length of the free edge.

For single deck vessels e.g. gas carriers, the end connection of main frames may alternatively be based on a direct calculation where the rotation of upper and lower ends are taken into account.

33.3.5 Tween deck frames and vertical peak frames

(a) Tween deck frames are frames between the lowest deck or the lowest stringer on the ship's side and the uppermost superstructure deck between the collision bulkhead and the after peak bulkhead.

(b) The section modulus is not to be less than the greater of:

$$Z = 0.55Kl^2spw_k \qquad cm^3$$
$$Z = \frac{k}{\sqrt{KL}} \qquad cm^3$$

where:
k = 6.5 for peak frames
= 4.0 for tween deck frames
p = Design load for sloshing as given in 33.2.2(b)
w_k = Section modulus corrosion factor in tanks as given in 33.3.3

33.3.6 Girders

The section modulus requirement is given by:

$$Z = \frac{100S^2bpw_k}{\sigma} \qquad cm^3$$

where:
p = Design load for sloshing as given in 33.2.2(b)
b = Loading breadth, in m
$\sigma = \frac{190}{K} - 130f_2\frac{z_n - z_a}{z_n}$, maximum $\frac{160}{K}$ for continuous longitudinal girders within 0.4L amidships
= 160/K for other girders.

Between specified regions the σ-value may be varied linearly.

f_2 = Stress factor f_{2b} as given in 33.3.3
= Stress factor f_{2d} as given in 33.3.3

The above requirement applies about an axis parallel to the ship's side.
z_a , z_n and w_k = As given in 33.3.3

33.3.7 Strengthening against liquid impact pressure in larger tanks

If the ship side forms boundary of larger ballast or cargo tanks with free sloshing length l_s > 0.13 L and or breadth b_s > 0.56 B, the side structure is to have scantlings according to 33.5.6 for impact loads referred to in 33.2.1.

33.4 Deck Structures Subjected to Sloshing

33.4.1 Design Load for Sloshing

When Deck as tank boundary in tanks and located less than 0.25 b_s away from tank sides, the design load of deck structures for sloshing is not to be less than that obtained from the formula as given in 33.2.3.

For tanks with free breadth (no longitudinal wash bulkheads) $b_s > 0.56B$, the design pressure will be specially considered according to 33.2.2(c).

When Deck as tank boundary in tanks and located less than 0.25 l_s away from tank ends, the design load of deck structures for sloshing is not to be less than that obtained from the formula as given in 33.2.3.

For tanks with free length (no transverse wash bulkheads or transverse web frames in narrow tanks) $l_s > 0.13L$, the design pressure will be specially considered according to 33.2.2(c).

The sloshing pressure defined in 33.2.3 is to be taken as a constant value over the full tank depth and is to be taken as the greater of the sloshing pressures calculated for filling levels from 0.05 H_{max} to 0.95 H_{max}, in 0.05 H_{max} increments.

33.4.2 Strength deck plating

The thickness requirement corresponding to lateral pressure is given by:

$$t = \frac{15.8k_a s\sqrt{p}}{\sqrt{\sigma}} + t_c \qquad \text{mm}$$

where:

p	=	Design load for sloshing as given in 33.4.1
σ	=	Allowable stress within 0.4 L, given by:
	=	$\frac{175}{K} - 120f_{2d}$, maximum $\frac{120}{K}$ for transversely − stiffened
	=	120/K for longitudinally-stiffened
	=	160/K within 0.1 L from the perpendiculars and within line of large deck openings. Between specified regions the σ-value may be varied linearly.
K	=	The material factor K as specified in 1.5.2(a) of this Part.
f_{2d}	=	Stress factor above the neutral axis as given in 33.3.3

33.4.3 Longitudinals

The section modulus requirement is given by:

$$Z = \frac{83l^2 spw_k}{\sigma} \qquad \text{cm}^3, \text{minimum 15 cm}^3$$

where:

p	=	Design load for sloshing as given in 33.2.2(b)
w_k	=	Section modulus corrosion factor in tanks as given in 33.3.3
σ	=	Allowable stress, within 0.4 L midship given in Table 33-2
	=	160/K for continuous decks within 0.1L from the perpendiculars and for other deck longitudinals in general. Between specified regions the σ-value is to be varied linearly.

33.4.4 Transverse beams

The section modulus requirement is given by:

$$Z = 0.63Kl^2 spw_k \qquad \text{cm}^3, \text{minimum 15 cm}^3$$

where:

p = Design load for sloshing as given in 33.2.2(b)
s = Stiffener spacing, in m, measured along the plating
l = Stiffener span in m, measured along the topflange of the member. For definition of span point, see 1.9.2 of this Part. For curved stiffeners *l* may be taken as the cord length
K = The material factor K as specified in 1.5.2(a) of this Part
w_k = Section modulus corrosion factor in tanks as given in 33.3.3

33.4.5 Girders

(a) The section modulus requirement for simple girders is given by:

$$Z = \frac{100S^2bpw_k}{\sigma} \quad cm^3$$

where:
p = Design load for sloshing as given in 33.2.2(b)
b = Loading breadth, in m
σ = $\frac{190}{K} - 130f_{2d}\frac{z_n - z_a}{z_n}$, maximum $\frac{160}{K}$, for continuous longitudinal girders within 0.4L amidships
= 160/K or transverse girders and longitudinal girders
Between specified regions the σ-value may be varied linearly

(b) The web area requirement (after deduction of cut-outs) at the girder ends is given by:

$$A = 0.07KSbp + 10ht_k \quad cm^2$$

where:
p = As given in 33.4.5(a)
b = As given in 33.4.5(a)
h = Girder height, in m.

The web area at the middle of the span is not to be less than 0.5A.

33.4.6 Strengthening against liquid impact pressure in larger tanks

If the deck forms boundary of larger ballast or cargo tanks with free sloshing length l_s > 0.13 L and or breadth b_s > 0.56 B, the deck structure is to have scantlings according to 33.5.5 for impact loads referred to in 33.2.1.

33.5 Bulkhead Structures Subjected to Sloshing

33.5.1 Design Load for Sloshing

(a) When Longitudinal bulkheads as well as transverse bulkheads at sides in wide tanks and be located less than 0.25 b_s away from tank sides, the sloshing load pressure of bulkhead structures is not to be less than that obtained from the formula as given in 33.2.3.

For tanks with free breadth (no longitudinal wash bulkheads) b_s > 0.56B, the design pressure will be specially considered according to 33.2.2(c).

The sloshing pressure defined in 33.2.3 is to be taken as a constant value over the full tank depth and is to be taken as the greater of the sloshing pressures calculated for filling levels from 0.05 H_{max} to 0.95 H_{max}, in 0.05 H_{max} increments.

(b) When Transverse bulkheads and longitudinal bulkheads at ends in long tanks and be located less than 0.25 l_s away from tank ends, the sloshing load pressure of bulkhead structures is not to be less than that obtained from the formula as given in 33.2.3.

For tanks with free length (no transverse wash bulkheads or transverse web frames in narrow tanks) l_s > 0.13L, the design pressure will be specially considered according to 33.2.2(c).

The sloshing pressure defined in 33.2.3 is to be taken as a constant value over the full tank depth and is to be taken as the greater of the sloshing pressures calculated for filling levels from 0.05 H_{max} to 0.95 H_{max}, in 0.05 H_{max} increments.

33.5.2 Bulkhead plating

(a) The thickness requirement corresponding to lateral pressure is given by:

$$t = \frac{15.8 k_a s \sqrt{p}}{\sqrt{\sigma}} + t_c \qquad \text{mm}$$

where:

p = Design load for sloshing as given in 33.5.1

σ = 160/K, for longitudinally stiffened longitudinal bulkhead plating at neutral axis, irrespective of ship length.

= 140/K for transversely stiffened longitudinal bulkhead plating at neutral axis, within 0.4 L amidships, may however be taken as 160/K.
Above and below the neutral axis the σ-values is to be reduced linearly to the values for the deck and bottom plating, assuming the same stiffening direction and material factor as for the plating considered.

= 160/K for longitudinal bulkheads outside 0.05 L from F.P. and 0.1 L from A.P. and for transverse bulkheads in general.
Between specified regions the σ-value may be varied linearly.

K = The material factor K as specified in 1.5.2(a) of this Part.

(b) In corrugated bulkheads formed by welded plate strips, the thickness in flange and web plates may be differing. The thickness requirement then is given by the following modified formula:

$$t = \sqrt{\frac{500 s^2 p}{\sigma} - t_n^2} + t_c \qquad \text{mm}$$

where:

t_n = Thickness, in mm, of neighboring plate (flange or web), not to be taken greater than t as given in (a).

33.5.3 Longitudinals

The section modulus requirement for stiffeners and corrugations is given by:

$$Z = \frac{83 l^2 s p w_k}{\sigma} \qquad \text{cm}^3, \text{minimum } 15 \text{ cm}^3$$

where:

p = Design load for sloshing as given in 33.2.2(b)

w_k = Section modulus corrosion factor in tanks as given in 33.3.3

σ = $\frac{225}{K} - 130 f_2 \frac{z_n - z_a}{z_n}$, maximum $\frac{160}{K}$, within 0.4L amidships

= 160/K within 0.1 L from perpendiculars.
Between specified regions the σ-value is to be varied linearly.

f_2 = Stress factor f_{2b} as given in 33.3.3
= Stress factor f_{2d} as given in 33.3.3

33.5.4 Vertical and transverse stiffeners on tank, wash, dry bulk cargo, collision and watertight bulkheads

(a) Transverse bulkheads for ballast and bulk cargo holds are normally built with strength members only in the vertical direction (corrugations or double plane bulkheads), having unsupported spans from deck to inner bottom.

(b) The section modulus requirement for simple stiffeners and corrugations is given by:

$$Z = \frac{1000 l^2 s p w_k}{m\sigma} \quad cm^3$$

where:

p = Design load for sloshing as given in 33.2.2(b)
σ = 160/K for tank, cargo and collision bulkheads
= 220/K for watertight bulkheads
m = 7.5 for vertical stiffeners simply supported at one or both ends
= 10 for transverse stiffeners and vertical stiffeners which may be considered fixed at both ends
= 10 for horizontal corrugations fixed at ends
= 13 for vertical corrugation, upper end if fixed
= 20 for vertical corrugation, upper end if flexible
= m_s for vertical corrugation, lower end to stool
= $\frac{8m_s}{m_s - 4}$ for vertical corrugation at middle of span, $m(\text{max.}) = 13$

$$m_s = 7.5\left[1 + \frac{4b_c\left(H_s + \frac{h_{db}}{2}\right)}{b_s l_{db}}\right]$$

b_c = Breadth of stool, in m, where corrugation is welded in
b_s = Breadth of stool, in m, at inner bottom
H_s = Height of stool, in m
h_{db} = Height of double bottom, in m
l_{db} = Length of cargo hold double bottom between stools, in m, not to be taken larger than $6H_s$ or $6h_{db}$ if no stool.

33.5.5 Girders

(a) The section modulus requirement for simple girders is given by:

$$Z = \frac{100 S^2 b p w_k}{\sigma} \quad cm^3$$

where:

p = Design load for sloshing as given in 33.2.2(b)
b = Loading breadth, in m
σ = $\frac{190}{K} - 130 f_2 \frac{z_n - z_a}{z_n}$, maximum $\frac{160}{K}$, for continuous longitudinal girders within 0.4L amidships
= 160/K for other girders.
Between specified regions the σ-value may be varied linearly.
= 160/K, for longitudinals girders in any case

f_2 = Stress factor f_{2b} as given in 33.3.3
= Stress factor f_{2d} as given in 33.3.3

(b) The web area requirement (after deduction of cut-outs) at the girder ends is given by:

$$A = ckSbpK + 10ht_k \quad cm^2$$

where:
p = Design load for sloshing as given in 33.2.2(b)
k = 0.06 for stringers and upper end of vertical girders
= 0.08 for lower end of vertical girders
c = 1.0
b = Loading breadth, in m
h = Girder height, in m.

The web area at the middle of the span is not to be less than 0.5 A.

33.5.6 Strengthening against liquid impact pressure in larger tanks

(a) For tanks with free sloshing length l_s > 0.13 L and/or breadth b_s > 0.56 B, structures are to be strengthened for the impact pressure as given in 33.2.1 using following formulae.

(b) Plating subjected to impact pressure p_i. The thickness is not to be less than:

$$t = 0.9k_a s\sqrt{p_i K} + t_c \quad mm$$

(c) Stiffeners supporting plating subjected to impact pressure p_i. The section modulus is not to be taken less than:

$$Z = 0.5ll_p sp_i k_p w_k K \quad cm^3$$

The shear area at each end is not to be less than:

$$A_s = \frac{0.5l(l_p - s)sp_i k_p K}{l_p} + 10ht_k \quad cm^2$$

where:
l_p = Loaded length of stiffener, maximum l, but need not be taken greater than 0.1 l_s or 0.1 b_s, respectively, for longitudinal or transverse impact pressure
k_p = Correction factor for resulting impact pressure
= $1.1 - 10\frac{l}{l_s'}$, minimum 0.35
l_s' = l_s or b_s as defined in 33.2.3
h = Height of stiffener, in m.

If the impact pressure is acting on the stiffener side, the stiffener web thickness is not to be less than:

$$t = 5 + \frac{sp_i K}{100} + t_c \quad mm$$

The leg length of continuous fillet welding of the stiffener to the plating when impact pressure is acting on the stiffener side is not be less than:

$$t = \sqrt{2}\left(\frac{sp_i}{120} + \frac{t_c}{2}\right) \quad \text{mm}$$

The net connection area of continuous stiffeners at girders is to satisfy the following expression:

$$2A_s = 1.7A_F + A_W \quad \text{cm}^2$$

where:

A_F	=	Connection area at flange, in cm^2
A_W	=	Connection area at web, in cm^2

(d) Girders supporting stiffeners subjected to impact pressure p_i:
The section modulus is not to be less than:

$$Z = 0.5SS_p bp_i k_p w_k K \quad \text{cm}^3$$

The shear area at each end is not to be taken less than:

$$A_s = 0.05Sbp_i k_p K + 10ht_k \quad \text{cm}^2$$

where:

S_p	=	Loaded length of girder, maximum S, but need not be taken greater than 0.1 l_s or 0.1 b_s, respectively, for longitudinal or transverse impact pressure.
S	=	Girder span, in m. For definition of span point, see 1.9.2 of this Part.
k_p	=	Correction factor for impact pressure.
	=	$1.1 - 10\frac{b}{l'_s}$, minimum 0.25 for horizontals
	=	$1.1 - 10\frac{S_p}{l'_s}$, minimum 0.25 for verticals
l'_s	=	l_s or b_s as defined in 33.2.3.
h	=	Height of girder web, in m.
b	=	Loading breadth of girder, in m.

The web thickness is not to be less than:

$$t = 6.5 + 0.2\sqrt{p_i K} + t_c \quad \text{mm}$$

The throat thickness of continuous fillet welding of girder webs to the plating subjected to impact pressure acting on the girder web side is not to be less than:

$$t = \sqrt{2}\left(\frac{sp_i}{120} + \frac{t_c}{2}\right) \quad \text{mm}$$

The spacing of stiffeners on the web plate for girders in the tank where impact pressure occurs is not to be taken greater than:

$$s = \frac{1.2(t - t_c)}{\sqrt{p_i}} \quad \text{m}$$

where:

p_i = Impact pressure at panel near girder.

33.6 Design Sloshing Load for Ships with Length less than 100 Meters

33.6.1 Design Load for Sloshing

Side, deck structures and transverse bulkheads at ends in tanks with $10 < l_s < 0.13$ L and located less than 0.25 l_s away from tank ends, the sloshing load pressure is to be considered and not to be less than that obtained from the formula as given in 33.2.3.

When $l_s > 0.13$ L, the design pressure will be specially considered according to 33.2.2(c).

The sloshing pressure defined in 33.2.3 is to be taken as a constant value over the full tank depth and is to be taken as the greater of the sloshing pressures calculated for filling levels from 0.05 H_{max} to 0.95 H_{max}, in 0.05 H_{max} increments.

33.6.2 Side Structures Subjected to Sloshing

(a) Side plating, general

The thickness requirement corresponding to lateral pressure is given by:

$$t = \frac{15.8 k_a s \sqrt{p}}{\sqrt{\sigma}} + t_c \qquad \text{mm}$$

where:

p	=	Design load for sloshing as given in 33.6.1
t_c	=	Corrosion addition, as stated in Table II 33-1.
σ	=	As given in Table II 33-3.

(b) Longitudinals

The section modulus requirement is given by:

$$Z = \frac{83 l^2 s p w_k}{\sigma} \qquad \text{cm}^3, \text{minimum 15 cm}^3$$

where:

p	=	Design load for sloshing as given in 33.2.2(b)
w_k	=	Section modulus corrosion factor in tanks as given in 33.3.3
σ	=	95 at deck or bottom within 0.4 L when $Z_A = Z_R$
	=	160 at deck or bottom within 0.4 L when $Z_A \geq 2 Z_R$
	=	160 within 0.25 D above and below the neutral axis
	=	160 within 0.1 L from the perpendiculars.
		Between specified regions the σ-value may be varied linearly.
Z_A	=	Midship section modulus, in cm^3, as built at deck or bottom respectively.
Z_R	=	Rule midship section modulus, in cm^3, as given in 3.2.2 of this Part.

(c) Main frames

(i) Main frames are frames located outside the peak tanks, connected to the floors or the double bottom and extending to the lowest deck or stringer on the ship's side.

(ii) The section modulus requirement is given by the greater of:

$$Z = 0.5 l^2 s p w_k \quad \text{cm}^3$$
$$= 6.5\sqrt{L} \quad \text{cm}^3$$

p = Design load for sloshing as given in 33.2.2(b)
l = Corresponding to full length of frame including brackets, in m.

(iii) The requirement given in (b) is based on the assumption that effective brackets are fitted at both ends. The length of brackets is not to be less than:

0.12 l for the lower bracket.
0.07 l for the upper bracket.

The section modulus of frame including bracket is not to be less than:

2 Z at lower end
1.7 Z at upper end

Z = As given in 33.6.2(c)(ii)

When the length of the free edge of the bracket is more than 40 times the plate thickness, a flange is to be fitted, the width being at least 1/15 of the length of the free edge.

(d) Tween deck frames and vertical peak frames

(i) Tween deck frames are frames between the lowest deck or the lowest stringer on the ship's side and the uppermost superstructure deck between the collision bulkhead and the after peak bulkhead.

(ii) The section modulus is not to be less than the greater of:

$Z = 0.55 l^2 spw_k \quad cm^3$
$= k\sqrt{L} \quad cm^3$
k = 6.5 for peak frames
= 4.0 for tween deck frames
p = Design load for sloshing as given in 33.2.2(b)

(e) Girders

(i) The section modulus requirement is given by:

$$Z = \frac{100S^2bpw_k}{\sigma} \quad cm^3$$

where:
p = Design load for sloshing as given in 33.2.2(b)
b = Loading breadth, in m
σ = As given in 33.6.2(b) for continuous longitudinal girders
= 160/K for other girders.

The above requirement apply about an axis parallel to the ship's side.

(ii) The web area requirement (after deduction of cut-outs) at the girder ends is given by:

$$A = kSbp + 10ht_k \quad cm^2$$

where:
k = 0.06 for continuous horizontal girders and upper end of vertical girders
= 0.08 for lower end of vertical girders
b = As given in 33.6.2(e)(i)
h = Girder height, in m
p = Design load for sloshing as given in 33.2.2(b)

The web area at the middle of the span is not to be less than 0.5A.

The above requirement apply when the web plate is perpendicular to the ship's side.

For oblique angles the requirement is to be increased by the factor 1/cos θ, where θ is the angle between the web plate of the girder and the perpendicular to the ship's side.

33.6.3 Deck Structures Subjected to Sloshing

(a) Strength deck plating

The thickness requirement corresponding to lateral pressure is given by:

$$t = \frac{15.8 k_a s \sqrt{p}}{\sqrt{\sigma}} + t_c \qquad \text{mm}$$

where:

p	=	Design load for sloshing as given in 33.6.1
σ	=	As given in Table II 33-4.

(b) Longitudinals

The section modulus requirement is given by:

$$Z = \frac{83 l^2 s p w_k}{\sigma} \qquad \text{cm}^3, \text{minimum 15 cm}^3$$

where:

p	=	Design load for sloshing as given in 33.2.2(b)
σ	=	95 within 0.4 L midship when $Z_D = Z_R$
	=	160 within 0.4 L midship when $Z_D \geq 2\ Z_R$
	=	160 within 0.1 L from the perpendiculars.
		Between specified regions the σ-value may be varied linearly.

(c) Transverse beams

The section modulus requirement is given by:

$$Z = 0.63 l^2 s p w_k \qquad \text{cm}^3, \text{minimum 15 cm}^3$$

where:

p = Design load for sloshing as given in 33.2.2(b)

(d) Simple girders

(i) The section modulus requirement for simple girders is given by:

$$Z = \frac{100 S^2 b p w_k}{\sigma} \qquad \text{cm}^3$$

where:

p	=	Design load for sloshing as given in 33.2.2(b)
b	=	Loading breadth, in m
σ	=	Allowable stress as given in 33.6.2(b) for longitudinal girders
	=	160 for other girders.

(ii) The web area requirement (after deduction of cut-outs) at the girder ends is given by:

$$A = 0.06Sbp + 10ht_k \qquad cm^2$$

where:

p	=	As given in 33.6.3(d)(i)
b	=	As given in 33.6.3(d)(i)
h	=	Girder height, in m.

The web area at the middle of the span is not to be less than 0.5A.

33.6.4 Bulkhead Structures Subjected to Sloshing

(a) Bulkhead plating

The thickness requirement corresponding to lateral pressure is given by:

$$t = \frac{15.8k_a s\sqrt{p}}{\sqrt{\sigma}} + t_c \qquad mm$$

where:

p	=	Design load for sloshing as given in 33.6.1
σ	=	As given in Table II 33-5.

(b) Longitudinals

The section modulus requirement for stiffeners and corrugations is given by:

$$Z = \frac{83l^2 spw_k}{\sigma} \qquad cm^3, \text{minimum } 15\ cm^3$$

where:

p	=	Design load for sloshing as given in 33.2.2(b)
σ	=	95 at deck or bottom within 0.4 L when $Z_A = Z_R$
	=	160 at deck or bottom within 0.4 L when $Z_A \geq 2\ Z_R$
	=	160 within 0.25 D above and below the neutral axis
	=	160 within 0.1 L from the perpendiculars.
		Between specified regions the σ-value may be varied linearly.

(c) Vertical and transverse stiffeners on tank bulkheads

(i) Transverse bulkheads for ballast are normally built with strength members only in the vertical direction (corrugations or double plane bulkheads), having unsupported spans from deck to inner bottom.

(ii) The section modulus requirement for simple stiffeners and corrugations is given by:

$$Z = \frac{6.25l^2 spw_k}{m} \qquad cm^3$$

where:

p	=	Design load for sloshing as given in 33.2.2(b)
m	=	7.5 for vertical stiffeners simply supported at one or both ends
	=	10 for transverse stiffeners and vertical stiffeners which may be considered fixed at both ends.

(d) Stiffeners on watertight bulkheads and wash bulkheads

(i) The section modulus requirement is given by:

$$Z = \frac{1000l^2 spw_k}{m\sigma} \qquad cm^3$$

where:

p	=	Design load for sloshing as given in 33.2.2(b)
σ	=	160 for collision bulkheads
	=	220 for other watertight bulkheads
m	=	16 for member fixed at both ends
	=	12 for member fixed at one end (lower) and simply supported at the other
	=	8 for member simply supported at both ends.

The m-value may be adjusted for members with boundary conditions not corresponding to the above specification.

(e) Girders

(i) The section modulus requirement for simple girders is given by:

$$Z = \frac{100S^2 bpw_k}{\sigma} \qquad cm^3$$

where:

p	=	Design load for sloshing as given in 33.2.2(b)
b	=	Loading breadth, in m
σ	=	As given in 33.6.4(b) for continuous longitudinal girders
	=	160 for other girders.

(ii) The web area requirement (after deduction of cut-outs) at the girder ends is given by:

$$A = kSbp + 10ht_k \qquad cm^2$$

where:

p	=	As given in 33.6.4(e)(i)
k	=	0.06 for stringers and upper end of vertical girders
	=	0.08 for lower end of vertical girders
b	=	As given in 33.6.4(e)(i)
h	=	Girder height, in m.

The web area at the middle of the span is not to be less than 0.5A.

Table II 33-1
Corrosion Addition t_c in mm

Internal members and plate boundary between spaces of the given category	Tank / hold region	
	Within 1.5 m below weather deck tank or hold top	Elsewhere
Ballast tank(1)	3.0	1.5
Cargo oil tank only	2.0	1.0 (0) (2)
Plate boundary between given space categories	Tank / hold region	
	Within 1.5 m below weather deck tank or hold top	Elsewhere
Ballast tank(1) / Cargo oil tank only	2.5	1.5 (1.0) (2)
Ballast tank(1) / Hold of dry bulk cargo carrier	2.0	1.5
Ballast tank(1) / Other category space(3)	2.0	1.0
Cargo oil tank only / Other category space(3)	1.0	0.5 (0) (2)

Note:
(1) The term ballast tank also includes combined ballast and cargo oil tanks, but not cargo oil tanks which may carry water ballast according to MARPOL 73/78 Annex I Reg. 18.
(2) The value in brackets refers to non-horizontal surfaces.
(3) Other category space denotes the hull exterior and all spaces other than water ballast and cargo oil tanks and holds of dry bulk cargo carriers.

Table II 33-2
Allowable Stresses

Position of deck longitudinals	Allowable stress σ (N/mm^2)
Strength deck, long superstructures and effective deckhouses above strength deck	$\frac{225}{K} - 130f_{2d}$, maximum $\frac{160}{K}$
Continuous decks below strength deck	$\frac{225}{K} - 130f_{2d}\frac{z_n - z_a}{z_n}$, maximum $\frac{160}{K}$

Table II 33-3
Allowable Stresses

Structural system	Allowable stress σ (N/mm^2) (1)
Transverse stiffening	120 within 0.4 L at neutral axis $60Z_A/Z_R$, maximum 120 within 0.4 L at deck or bottom 160 within 0.1 L from the perpendiculars
Longitudinal stiffening	140 within 0.4 L at neutral axis 120 within 0.4 L at deck or bottom 160 within 0.1 L from the perpendiculars

Note:
(1) Between specified regions the σ-value may be varied linearly.

Table II 33-4
Allowable Stresses

Structural system	Allowable stress σ (N/mm^2) (1)
Transverse stiffening	$60Z_D/Z_R$, maximum 120 within 0.4 L 160 within 0.1 L from the perpendiculars
Longitudinal stiffening	120 within 0.4 L 160 within 0.1 L from the perpendiculars
Note: (1) Between specified regions the σ-value may be varied linearly.	

Table II 33-5
Allowable Stresses

Bulkhead	Allowable stress σ (N/mm^2) (1)
Longitudinal bulkhead	Transverse stiffening: 140 within 0.4 L at neutral axis $60Z_A/Z_R$, at deck or bottom 160 within 0.1 L from perpendiculars
	Longitudinal stiffening: 160 within 0.4 L at neutral axis 120 within 0.4 L at deck or bottom 160 within 0.1 L from perpendiculars
Transverse tank bulkheads	160
Collision bulkheads	160
Watertight bulkheads	220
Note: (1) Between specified regions the σ-value may be varied linearly.	

Chapter 34

Noise and Vibration on Board Ships

34.1 General

34.1.1 Application

(a) The requirement in this chapter is intended to provide standards to prevent the occurrence of potentially hazardous noise and vibration on board ships and to provide acceptable standards for the applying ships.

(1) Ships which comply with the limits for noise levels of the code on noise levels on board ships (hereinafter referred to as "the Noise Code") adopted by resolution MSC.337(91), as given in Table II 34-1, will be assigned the notation **NR**. Where **NR** means the noise restricted by the noise level limits which quantify the comfort rating of noise for the vessel.

(2) Ships which comply with the limits for vibration of ISO 20283-5:2016, as given in Table II 34-2, will be assigned the notation **VR**. Where **VR** means the vibration restricted by values given in Table II 34-2.

(b) Ships not engaged on international voyages may apply **NR** notation voluntarily, except in case where specified by the Administration.

(c) The **VR** notation is applicable to ships applying vibration measurement and evalutation according to ISO 20283-5:2016.

34.1.2 Notation

(a) Ships of a gross tonnage of 1,600 and above but less than 10,000, which fulfill the requirements of 34.2.1 and 34.2.4 of this chapter and meet the limits for noise levels of Level I given in Table II 34-1, will be eligible to receive the notation **NR-I**.

(b) Ships of a gross tonnage of 10,000 and above, which fulfill the requirements of 34.2.1 and 34.2.4 of this chapter and meet the limits for noise levels of Level II given in Table II 34-1, will be eligible to receive the notation **NR-II**.

(c) Ships of a less gross tonnage than those categories given in (a) and (b) above may apply for a higher Level of noise limits at Owners' discretion.

(d) Ships affixed with **VR** notation comply with the requirements of 34.3 and meet the limits given in Table II 34-2.

34.1.3 Definitions

(a) Noise – Audible air pressure fluctuations generated by ship machinery, systems or structure, i.e. in the frequency range 20 to 20,000 Hz.

(b) dB(A) – A-weighted global value of the sound pressure level.

(c) Other noise related definitions are to be in accordance with the Section 1.4 Definitions of the Noise Code.

(d) Crew accommodation space – Space intended for crew recreational and administration use, namely cabins including day and sleeping rooms, hospitals, mess rooms, recreation rooms.

Note: Recreation rooms are lounges, smoke rooms, cinemas, gymnasiums, libraries, hobby rooms and game rooms.

(e) Work space – Area allocated for predominant manual work, namely workshops, laundries, galleys and laboratories, but except machinery spaces.

(f) Machinery space – Space which contains steam or internal-combustion machinery, pumps, air compressors, boilers, oil fuel units, major electrical machinery, oil filling stations, thrusters, refrigerating, stabilizing, steering gear, ventilation and air conditioning machinery, etc. and trunks to such spaces

Note: Machinery spaces are not meant for longer stay, hence they are not considered in ISO 20283-5:2016.

(g) Other vibration related definitions are to be in accordance with the Section 3 Terms and definitions of ISO 20283-5:2016.

34.2 Noise on Board Ships

34.2.1 For the condition of assigning the notation **NR**, the provisions in the following Chapters of the Noise Code are to be conformed.

(a) Chapter 2 Measuring equipments.

(b) Chapter 3 Measurement.

(c) Chapter 6 Acoustic insulation between accommodation spaces.

34.2.2 For the classification purpose of assigning the notation **NR**, the confirmation to the provisions in the following Chapters of the Noise Code are not included.

(a) Chapter 5 Noise exposure limits.

(b) Chapter 7 Hearing protection and warning information.

34.2.3 Noise level limits

The noise level limits are categorized into two Levels, Level I and Level II, given in Table II 34-1.

34.2.4 Survey report

(a) A noise survey report is to be made for each ship. The report is to comprise information on the noise levels in the various spaces on board. The report is to show the reading at each specified measuring point. The points are to be marked on a general arrangement plan, or on accommodation drawings attached to the report, or otherwise are to be identified.

(b) The format for noise survey reports is set out in Appendix 1 of the Noise Code.

(c) The noise survey report is to be always carried on board and be accessible for the crew.

34.3 Vibration on Board Ships

34.3.1 For the condition of assigning the notation **VR**, the provisions in the following Sections of the ISO 20283-5:2016 are to be conformed.

(a) Section 4 Instrumentation.

(b) Section 5 Measurement locations and directions.

(c) Section 6 Measurement conditions.

(d) Section 7 Measurement procedure.

(e) Section 8 Evaluation.

34.3.2 Criteria

The values given in Table II 34-2 are to be regarded as maximum acceptable vibration values.

34.3.3 Test report

(a) A test report containing the information and data specified in Section 9 of ISO 20283-5:2016, is to be provided.

(b) The format for the report is set out in Annex B of ISO 20283-5:2016.

Table II 34-1
Limits for Noise Levels (dB(A))

Designation of rooms and spaces	Level I	Level II
	Ship size	
	1,600 up to 10,000 GT	≥10,000 GT
Work spaces		
Machinery spaces(1)	110	110
Machinery control rooms	75	75
Workshops other than those forming part of machinery spaces	85	85
Non-specified work spaces(2) (other work areas)	85	85
Navigation spaces		
Navigating bridge and chartrooms	65	65
Look-out posts, incl. navigating bridge wings(3) and windows	70	70
Radio rooms (with radio equipment operating but not producing audio signals)	60	60
Radar rooms	65	65
Accommodation spaces		
Cabin and hospitals(4)	60	55
Messrooms	65	60
Recreation rooms	65	60
Open recreation areas (external recreation areas)	75	75
Offices	65	60
Service spaces		
Galleys, without food processing equipment operating	75	75
Serveries and pantries	75	75
Normally unoccupied spaces		
Holds, deck areas and other spaces(5)	90	90

Note:

(1) If the maximum noise levels are exceeded when machinery is operating, stay should be limited to very short periods or not allowed at all.

(2) Examples are open deck workspaces that are not machinery spaces, and open deck workspaces where communication is relevant.

(3) Reference is made to the Recommendation on methods of measuring noise levels at listening posts (resolution A.343(IX)) which also applies.

(4) Hospitals: treatment rooms with beds.

(5) Measurements shall be taken in all locations with unusually high noise levels where seafarers may be exposed, even for relatively short periods, and at intermittently used machinery locations.
In order to restrict the number of measurements and recordings, noise levels need not be measured for normally unoccupied spaces, holds, deck areas and other spaces which are remote from sources of noise.
In cargo holds, at least 3 microphone positions in parts of holds where personnel are likely to carry out work shall be used. Also refer to 3.14 of resolution MSC.337(91).

Table II 34-2
Values of Acceptable Vibration

Type of occupied space	**Value**	
	Velocity (mm/s)	Acceleration (mm/s^2)
Crew spaces		
Crew accommodation	3.5	125
Work spaces	6.0	214
Offices	4.5	161
Navigation bridge and engine control room	5.0	179
Open-deck recreation spaces	4.5	161
Passenger spaces		
Cabins and public spaces	3.5	125
Open-deck recreation spaces	4.5	161

Appendix 1
Guidance on Conditions for Loading Manual

A1.1 General

The Loading Manual should contain the design loading and ballast conditions, subdivided into departure and arrival conditions, and ballast exchange at sea conditions, where applicable, upon which the approval of the hull scantlings is based.

A1.2 Guidance on Loading Condition

In particular the following loading conditions should be included:

A1.2.1 Cargo Ships, Container Ships, Roll-on/Roll-off and Refrigerated Carriers, Ore Carriers and Bulk Carriers

(a) Homogeneous loading conditions at maximum draught

(b) Ballast conditions

(c) Special loading conditions, e.g. container or light load conditions at less than the maximum draught, heavy cargo, empty holds or non-homogeneous cargo conditions, deck cargo conditions, etc., where applicable

(d) Short voyage or harbor conditions, where applicable

(e) Docking condition afloat

(f) Loading and unloading transitory conditions, where applicable

A1.2.2 Oil Tankers

(a) Homogeneous loading conditions (excluding dry and clean ballast tanks) and ballast or part-loaded conditions for both departure and arrival

(b) Any specified non-uniform distribution of loading

(c) Mid-voyage conditions relating to tank cleaning or other operations where these differ significantly from the ballast conditions

(d) Docking condition afloat

(e) Loading and unloading transitory conditions

A1.2.3 Chemical Tankers

(a) Conditions as specified for oil tankers

(b) Conditions for high density or heated cargo and segregated cargo where these are included in the approved cargo list

A1.2.4 Liquefied Gas Carriers

(a) Homogeneous loading conditions for all approved cargoes for both departure and arrival

(b) Ballast conditions for both departure and arrival

(c) Cargo condition where one or more tanks are empty or partially filled or where more than one type of cargo having significantly different densities is carried, for both departure and arrival

(d) Harbor condition for which an increased vapour pressure has been approved

(e) Docking condition afloat

A1.2.5 Combination Carriers

(a) Conditions as specified in A1.2.1 and A1.2.2 above.

Tel: *+886 2 25062711*
Fax: *+886 2 25074722*
E-mail: *cr.tp@crclass.org*
Website: *http://www.crclass.org*
© CR – All rights reserved

財團法人驗船中心
CR CLASSIFICATION SOCIETY

RULES FOR THE CONSTRUCTION AND CLASSIFICATION OF STEEL SHIPS 2022

PART III – SPECIAL SERVICE AND TYPE OF SHIPS

July 2022

財團法人驗船中心
CR CLASSIFICATION SOCIETY

RULES FOR THE CONSTRUCTION AND CLASSIFICATION OF STEEL SHIPS 2022

PART III – SPECIAL SERVICE AND TYPE OF SHIPS

July 2022

RULES FOR THE CONSTRUCTION AND CLASSIFICATION OF STEEL SHIPS

PART I CLASSIFICATION AND SURVEY

PART II HULL CONSTRUCTION AND EQUIPMENT

PART III SPECIAL SERVICE AND TYPE OF SHIPS

PART IV MACHINERY INSTALLATIONS – CONSTRUCTION AND SHAFTING

PART V BOILERS, PRESSURE VESSELS, THERMAL OIL HEATERS AND INCINERATORS

PART VI PIPING AND PUMPING SYSTEMS

PART VII ELECTRICAL INSTALLATIONS

PART VIII AUTOMATIC OR REMOTE CONTROL AND MONITORING SYSTEMS

PART IX FIRE PROTECTION, DETECTION AND EXTINCTION

PART X REFRIGERATED CARGO INSTALLATIONS

PART XI MATERIALS

PART XII WELDING

PART XIII NAVIGATIONAL SAFETY SYSTEMS

PART XIV GOAL-BASED SHIP CONSTRUCTION STANDARDS SHIPS

PART XV HULL CONSTRUCTION AND EQUIPMENT FOR SHIPS LESS THAN 90 M IN LENGTH

List of major changes in Part III from 2019 edition

2A.3.3(e)	Amend No.1
2.10.9	Amend No.2
5.1.5	Amend No.2
5.2.1	Amend No.2
13.1	Amend No.2
13.1.2(a)	Amend No.2
13.7.1(a)	Amend No.2
13.7.3	Amend No.2

Acronyms

AIS	Automatic Identification System
ANTS	Automatic Navigation and Track-keeping System
ARPA	Automatic Radar Plotting Aid
BC Code	Code of Safe Practice for Solid Bulk Cargoes
BNWAS	Bridge Navigational Watch Alarm System
CA	Controlled Atmosphere
CDI	Chemical Distribution Institute
COW	Crude Oil Washing
CPA	Closest Point of Approach
CPP	Controllable Pitch Propeller
CSC	International Convention for Safe Containers
CSR	Common Structural Rules
CTOD	Crack Tip Opening Displacement
ECDIS	Electronic Chart Display and Information System
EEBD	Emergency Escape Breathing Devices
ENC	Electronic Navigational Chart
ESP	Enhance Survey Plan
ETA	Emergency Towing Arrangement
FEU	Forty-foot Equivalent Unit
FMEA	Failure Mode & Effect Analysis
FRP, GRP	Fibreglass Reinforced Plastics
FTP Code	International Code for Application of Fire Test Procedures
GBS	Goal-Based ship construction Standards
GDC	General Dry Cargo
GLONASS	Global Navigation Satellite System
GMDSS	Global Maritime Distress and Safety System
GPS	Global Positioning System
HAZ	Heat Affected Zone
HHP anchor	High Holding Power anchor
HSC	High Speed Craft

HTS	High Tensile Steel
IACS	International Association of Classification Societies
IBC Code	International Code for the Construction and Equipment of Ships Carrying Dangerous Chemicals in Bulk
ICS	The International Chamber of Shipping
IEC	International Electrotechnical Commission
IGC Code	International Code for the Construction and Equipment of Ships Carrying Liquefied Gases in Bulk
ILO	International Labour Organization
IMDG Code	International Maritime Dangerous Goods Code
IMO	International Maritime Organization
ISO	International Standards Organization
LAN	Local Area Network
LCS	Loading Computer System
LEL	Lower Explosive Limit
LRIT	Long-range Identification and Tracking of ships
MARPOL	International Convention for the Prevention of Pollution from Ships
MARVS	Maximum Allowable Relief Valve Setting
MEPC	Marine Environment Protection Committee
MLC	Maritime Labour Convention
MSC	Maritime Safety Committee
NDT	Nondestructive Testing
OCIMF	The Oil Companies International Marine Forum
OOW	Officer Of the Watch
PA	Public Address
PMA	Permanent Means of Access
PMS	Planned Machinery Maintenance Scheme
RH	Relative Humidity
RIT	Remote Inspection Techniques
PSPC	Performance Standard for Protective Coating

SENC	System Electronic Navigational Chart
SHHP anchor	Super High Holding Power anchor
SOLAS	International Convention for the Safety of Life at Sea
SRE	Ship Recycling
STCW	International Convention on Standards of Training, Certification and Watch-keeping for Seafarers
STS operation	Ship-To-Ship operation
S-VDR	Simplified Voyage Data Recorder
TCPA	Time to CPA
TEU	Twenty-foot Equivalent Unit
THD	Total Harmonic Distortion
TMCP	Thermo-Mechanical Controlled Processing
UPS	Uninterruptible Power Supply
VDR	Voyage Data Recorder
VEC	Vapor Emission Control

RULES FOR THE CONSTRUCTION AND CLASSIFICATION OF STEEL SHIPS

PART III
SPECIAL SERVICE AND TYPE OF SHIPS

CONTENTS

Chapter 1 Bulk or Ore Carriers 1

1.1 General 1
1.2 Harmonised Notations and Corresponding Design Loading Conditions 1
1.3 Shell and Deck Plating 6
1.4 Double Bottoms 6
1.5 Lower Wing Tanks 8
1.6 Hold Frames 9
1.7 Topside Wing Tanks 10
1.8 Double Side Tanks 11
1.9 Transverse Bulkhead in Cargo Hold 12
1.10 Requirements for the Fitting of a Forecastle 14
1.11 Coating 15

Chapter 1A Additional Requirement for Bulk Carriers 16

1A.1 General 16
1A.2 Loading Manuals and Loading Instruments for Bulk Carriers 16
1A.3 Side Structures 18
1A.4 Longitudinal Strength of Hull Girder in Flooded Condition 21
1A.5 Evaluation of Scantlings of Corrugated Transverse Watertight Bulkheads in Flooded Hold 23
1A.6 Evaluation of Allowable Hold Loading Considering Hold Flooding 34
1A.7 Hatch Covers and Hatch Coamings of Cargo Holds 38
1A.8 Cargo Hatch Cover Securing Arrangements for Bulk Carriers not Built in Accordance with 1A.7 47
1A.9 Renewal Criteria for Side Shell Frames and Brackets in Single Side Skin Bulk Carriers not Built in Accordance with 1A.3 49

Chapter 2 Oil Tankers 57

2.1 General 57
2.2 Special Conditions of Assignment for Tanker Freeboard 58
2.3 Primary Supporting Members-Webs, Girders, Transverses and Cross Ties 59
2.4 Longitudinal Strength 61
2.5 Shell and Deck Plating 61
2.6 Structural Sections 61
2.7 Bulkhead Plating 62

2.8 Structural Requirements beyond Cargo Spaces and at Ends 63
2.9 Finite Element Analyses 63
2.10 Structural Details 64
2.11 Safe Access to Tanker Bows 65

Chapter 2A Double Hull Tankers 66

2A.1 General 66
2A.2 Tank Arrangement 66
2A.3 Location and Separation 80
2A.4 Minimum Thickness 81
2A.5 Direct Strength Calculation 81
2A.6 Bulkhead Plating 82
2A.7 Longitudinals and Stiffeners 83
2A.8 Girders, Transverses and Cross Tie 86
2A.9 Structural Details 91
2A.10 Special Requirements for Corrosion 91
2A.11 Special Requirements for Tankers with Mid-Deck 93
2A.12 Special Requirements for Forward Wing Tanks 93
2A.13 Construction and Strengthening of the Forward Bottom 94
2A.14 Special Requirements for Hatchways and Freeing Arrangements 94
2A.15 Welding 95

Chapter 3 Container Carriers 97

3.1 General 97
3.2 Submission of Plans and Data 97
3.3 Longitudinal Strength 98
3.4 Double Bottoms 98
3.5 Decks 98
3.6 Shell Plating and Double Skin 99
3.7 Fixed Cell Guides 99
3.8 Lashing Bridge 100
3.9 Breakwater 102
3.10 Measures to Prevent Propagation of Brittle Fractures 102
3.11 Direct Strength Assessment 102

Chapter 4 Liquefied Gas Carriers 116

4.1 General 116
4.2 Class Notations 116
4.3 Submission of Plans and Data 117
4.4 Special Material and Construction Requirements 119
4.5 Safe Access to Tanker Bows 119

Chapter 5 Chemical Tanker **120**

5.1 General 120
5.2 Class Notations 120
5.3 Submission of Plans and Data 121
5.4 Safe Access to Tanker Bows 121

Chapter 6 Roll on-Roll off Ships **122**

6.1 General 122
6.2 Submission of Plans and Data 122
6.3 Deck Structure 122
6.4 Doors in Ship's Shell 125

Chapter 7 Fishing Ships **126**

7.1 General 126
7.2 Decks 126
7.3 Shell Plating and Bulwarks 127
7.4 Weather Deck Hatchways and Openings 127
7.5 Equipment 128

Chapter 8 Floating Docks **129**

8.1 General 129
8.2 Plans 129
8.3 Definitions 130
8.4 Freeboards and Stability 130
8.5 Longitudinal Strength 130
8.6 Transverse Strength 131
8.7 Local Strength 131
8.8 Tests 132
8.9 Machinery and Electrical Installation 132
8.10 Fire Extinguishing Arrangements 133
8.11 Surveys 133

Chapter 9 Steel Barges **134**

9.1 General 134
9.2 Longitudinal Strength 134
9.3 Single Bottoms 134
9.4 Double Bottoms 135
9.5 Frames 136
9.6 Shell Plating 136
9.7 Beams and Deck Longitudinals 137

9.8 Deck Girders and Pillars 138
9.9 Decks 138
9.10 Watertight Bulkheads and Tank Bulkheads 139
9.11 End Constructions 139
9.12 Hatchways and Other Closing Appliances 139
9.13 Equipment 139

Chapter 10 Navigation in Ice 140

10.1 General 140
10.2 Max. and Min. Draught 140
10.3 Power of Propulsion Engines 141
10.4 Reinforcement of Hull Structures 145
10.5 Rudders and Steering Arrangements 156
10.6 Propellers, Shafts and Gears 156
10.7 Starting Arrangements 159
10.8 Sea Inlets and Cooling Water Systems 159

Chapter 10A Polar Class 160

10A.1 Polar Class Descriptions and Application 160
10A.2 Structural Requirements for Polar Class Ships 161
10A.3 Machinery Requirements for Polar Class Ships 182

Chapter 11 Tugs 195

11.1 General 195
11.2 Longitudinal Strength 195
11.3 Hull Construction 195
11.4 Bulwarks and Fenders 196
11.5 Machinery Casings and Escape Hatches 196
11.6 Side Scuttles 196
11.7 Towing Arrangement 196
11.8 Stability 201
11.9 Static Bollard Pull Test 202

Chapter 11A Escort Tugs 204

11A.1 Class Notations 204
11A.2 Definitions 204
11A.3 Design and Arrangement 205
11A.4 Stability 206
11A.5 Full Scale Testing 208

Chapter 12 Fire-fighting Ships 209

12.1 General 209
12.2 Fire-fighting Characteristics 209
12.3 Constructions 210
12.4 Fire-fighting Systems 210
12.5 Fire Protection 211
12.6 Fireman's Outfits 212
12.7 Inspections and Tests 213

Chapter 13 Mobile Offshore Unit 214

13.1 General 214
13.2 Hull Structures and Arrangements 221
13.3 Subdivision and Stability 240
13.4 Mooring Systems and Equipment 248
13.5 Machinery, Equipment and Systems 251
13.6 Pumps and Piping Systems 253
13.7 Electrical Installations 255
13.8 Fire and Safety 257

Chapter 14 Additional Requirements for General Dry Cargo Ships 258

14.1 Application 258

Chapter 15 Cable Laying Ships or Barges 259

15.1 General 259
15.2 Submission of Plans and Data 259
15.3 Seakeeping for Cable Laying 261
15.4 Design and Arrangements of Ships or Barges 262
15.5 Cable Laying Equipment and Systems 264
15.6 Tests, Trials, and Surveys 264

Chapter 16 Offshore Service Vessels 266

16.1 General 266
16.2 Offshore Service Vessels 272
16.3 Anchor-Handling and Towing Vessels 284
16.4 Standby Vessels 288
16.5 Windfarm Maintenance Vessels 293

Appendix 1 Direct Strength Assessment 296

A1.1 General 296
A1.2 Loads 297
A1.3 FEM Modelling 298
A1.4 Submission of Results 299
A1.5 Computer Programs 300

Appendix 2 Intact Stability Requirements for Ships Equipped with Heavy Lift Appliances 301

A2.1 Stability Information 301
A2.2 Intact Stability Requirements for Ships Equipped to Lift 302

Chapter 1
Bulk or Ore Carriers

1.1 General

1.1.1 For bulk carriers of 90 m in length or greater, excluding ore and combination carriers, classed with the Society and that enters into the scope of application of the IMO Resolution MSC.290(87) Goal-Based Ships construction standards for bulk carriers and oil tankers, or upon specific ship owner's request, the structural requirements are to be in accordance with IACS's Common Structural Rules for Bulk Carriers and Oil Tankers. For regions of the structure, which IACS's Common Structural Rules do not cover, the relevant requirements of the Society's Rules are to be applied, with appropriate consideration to related provisions of the Common Structural Rules. For bulk carriers other than described above, the requirements of this chapter are applicable.

1.1.2 This Chapter applies to ships classed in accordance with the provisions in Chapter 1 of Part I and built for the purpose of carrying bulk or ore cargoes. Where the ship is specifically reinforced for the carriage of heavy density ore cargoes and/or special loading arrangements, it is to be distinguished in the classification symbol and the Register with an additional notation describing which cargo holds may be empty and if required what kind of cargo is intended to be carried. Full particulars of the loading conditions and the maximum density of the cargo to be intended for are to be specified on the basic construction drawings.

1.1.3 Except otherwise provided by this Chapter, the requirements for the construction of general ships given in Part II of the rules are to apply.

1.1.4 Arrangement

(a) This Chapter is intended to apply to the single deck carrier with machinery aft and having a double bottom.

(b) The bottom and the deck are to be framed longitudinally.

(c) The carrier may also have topside wing tanks and side tanks, or two continuous longitudinal bulkheads.

1.1.5 Bulk or ore carriers to which freeboards are assigned based on the subdivision requirements of the International Convention on Load Lines, 1996, are to comply with those regulations.

1.1.6 Longitudinal Strength

(a) The longitudinal strength of bulk carriers is to comply with the requirements in Chapter 3 of Part II of the Rules.

(b) In addition to the requirements in (a) above, all bulk carriers of 150 m in length and above, intending to carry cargoes having bulk density of 1.0 t/m^3, or above are to be in accordance with the requirements in 1A.4.

1.2 Harmonised Notations and Corresponding Design Loading Conditions

1.2.1 A bulk carrier may in actual operation be loaded differently from the design loading conditions specified in the loading manual, provided limitations for longitudinal and local strength as defined in the loading manual and loading instrument onboard and applicable stability requirements are not exceeded.

1.2.2 Application

(a) The requirement of 1.2 is applicable to "Bulk Carrier" of usual form, having single deck, machinery aft, bilge hopper tanks and topside tanks, and also double bottoms under cargo holds, and deck and bottoms with longitudinal framing, and length, as defined in 1.2.1, Part II of the Rules, of 150 m or above and contracted for new construction on or after 1 July 2003.

(b) The loading conditions listed under 1.2.4 of this Chapter are to be used for the checking of rules criteria regarding longitudinal strength as required in Chapter 3, Part II of the Rules and Chapter 1A of this Part, local strength, capacity and disposition of ballast tanks and stability. The loading conditions listed under 1.2.5 are to be used for the checking of rule criteria regarding local strength.

(c) For the purpose of applying the conditions given in this requirement, maximum draught is to be taken as moulded summer load line draught.

1.2.3 Harmonized notations and annotations

(a) Bulk Carriers are to be assigned one of the following notations:

BC-A : for bulk carriers designed to carry dry bulk cargoes of cargo density 1.0 t/m^3 and above with specified holds empty at maximum draught in addition to **BC-B** conditions.

BC-B : for bulk carriers designed to carry dry bulk cargoes of cargo density of 1.0 t/m^3 and above with all cargo holds loaded in addition to **BC-C** conditions.

BC-C : for bulk carriers designed to carry dry bulk cargoes of cargo density less than 1.0 t/m^3.

(b) The following additional notations and annotations are to be provided giving further detailed description of limitations to be observed during operation as a consequence of the design loading condition applied during the design in the following cases:

(i) Additional notations

{**Maximum cargo density (t/m^3)**} for notations **BC-A** and **BC-B** if the maximum cargo density is less than 3.0 t/m^3 ; {**No MP**} for all notations when the ship has not been designed for loading and unloading in multiple ports in accordance with the conditions specified in 1.2.5(c).

(ii) Annotations

{Allowed combination of specified empty holds} for notation **BC-A**.

(c) The additional class notation **GRAB [X]** may be assigned to ships**,** of which the holds are to be designed for loading/unloading by grabs having a maximum specific weight **X** equal to or greater than 20 tons.

1.2.4 Design loading conditions (General)

(a) **BC-C**

Homogeneous cargo loaded condition where the cargo density corresponds to all cargo holds, including hatchways, being 100% full at maximum draught with all ballast tanks empty.

(b) **BC-B**

As required for **BC-C**, plus:

Homogeneous cargo loaded condition with cargo density 3.0 t/m^3, and the same filling rate (cargo mass/hold cubic capacity) in all cargo holds at maximum draught with all ballast tanks empty.

In cases where the cargo density applied for this design loading condition is less than 3.0 t/m^3, the maximum density of the cargo that the vessel is allowed to carry is to be indicated with the additional notation {**Maximum cargo density x.y t/m^3**}.

(c) **BC-A**

As required for **BC-B**, plus:

At least one cargo loaded condition with specified holds empty, with cargo density 3.0 t/m^3, and the same filling rate (cargo mass/hold cubic capacity) in all loaded cargo holds at maximum draught with all ballast tanks empty.

The combination of specified empty holds is to be indicated with the annotation {**Holds a, b,⋯. may be empty**}.

In such cases where the design cargo density applied is less than 3.0 t/m^3 , the maximum density of the cargo that the vessel is allowed to carry is to be indicated within the annotation, e.g. {**Holds a, b,⋯. may be empty, with maximum cargo density x.y t/m^3**}.

(d) Ballast conditions (applicable to all notations)

(i) Ballast tank capacity and disposition

All bulk carriers are to have ballast tanks of sufficient capacity and so disposed to at least fulfill the following requirements.

(1) Normal ballast condition

Normal ballast condition for the purpose of this requirement is a ballast (no cargo) condition where:

a) the ballast tanks may be full, partially full or empty. Where partially full option is exercised, calculations for the intermediate condition just before and just after ballasting and/or de-ballasting any ballast tank are to be submitted and, where approved, included in the loading manual for guidance,

b) any cargo hold or holds adapted for the carriage of water ballast at sea are to be empty,

c) the propeller is to be fully immersed, and

d) the trim is to be by the stern and is not to exceed 0.015L, where L is the length between perpendiculars of the ship. In the assessment of the propeller immersion and trim, the draughts at the forward and after perpendiculars may be used.

(2) Heavy ballast condition

Heavy ballast condition for the purpose of this requirement is a ballast (no cargo) condition where:

a) the ballast tanks may be full, partially full or empty. Where partially full option is exercised, calculations for the intermediate condition just before and just after ballasting and/or de-ballasting any ballast tank are to be submitted and where approved included in the loading manual for guidance,

b) at least one cargo hold adapted for carriage of water ballast at sea, where required or provided, is to be full,

c) the propeller immersion I/D is to be at least 60%, where

I = The distance from propeller centerline to the waterline,
D = Propeller diameter, and

d) the trim is to be by the stern and is not to exceed 0.015L, where L is the length between perpendiculars of the ship,

e) the moulded forward draught in the heavy ballast condition is not to be less than the smaller of 0.03L or 8 m.

(ii) Strength requirements

All bulk carriers are to meet the following strength requirements:

(1) Normal ballast condition

a) the structures of bottom forward are to be strengthened in accordance with the Rules of the Society against slamming for the condition of 1.2.4(d)(i)(1) at the lightest forward draught,

b) the longitudinal strength requirements are to be met for the condition of 1.2.4(d)(i)(1), and

c) in addition, the longitudinal strength requirements are to be met with all ballast tanks 100 % full.

(2) Heavy ballast condition

a) the longitudinal strength requirements are to be met for the condition of 1.2.4(d)(i)(2),

b) in addition to the conditions in 1.2.4(d)(ii)(2)(A), the longitudinal strength requirements are to be met under a condition with all ballast tanks 100 % full and one cargo hold adapted and designated for the carriage of water ballast at sea, where provided, 100 % full, and

c) where more than one hold is adapted and designated for the carriage of water ballast at sea, it will not be required that two or more holds be assumed 100 % full simultaneously in the longitudinal strength assessment, unless such conditions are expected in the heavy ballast condition. Unless each hold is individually investigated, the designated heavy ballast hold and any/all restrictions for the use of other ballast hold(s) are to be indicated in the loading manual.

(e) Departure and arrival conditions

Unless otherwise specified, each of the design loading conditions defined in 1.2.4(a) to 1.2.4(d) is to be investigated for the departure and arrival conditions as defined below.

Departure condition	=	with bunker tanks not less than 95 % full and other consumables 100 %
Arrival condition	=	with 10% of consumables.

1.2.5 Design loading conditions (for local strength)

(a) Definitions

The maximum allowable or minimum required cargo mass in a cargo hold, or in two adjacently loaded holds, is related to the net load on the double bottom. The net load on the double bottom is a function of draft, cargo mass in the cargo hold, as well as the mass of fuel oil and ballast water contained in double bottom tanks.

The following definitions apply:

M_H : the actual cargo mass in a cargo hold corresponding to a homogeneously loaded condition at maximum draught.

M_{Full} : the cargo mass in a cargo hold corresponding to cargo with virtual density (homogeneous mass/hold cubic capacity, minimum 1.0 t/m^3) filled to the top of the hatch coaming. M_{Full} is in no case to be less than M_H.

M_{HD} : the maximum cargo mass allowed to be carried in a cargo hold according to design loading condition(s) with specified holds empty at maximum draft.

(b) General conditions applicable for all notations

(i) Any cargo hold is to be capable of carrying M_{Full} with fuel oil tanks in double bottom in way of the cargo hold, if any, being 100% full and ballast water tanks in the double bottom in way of the cargo hold being empty, at maximum draught.

(ii) Any cargo hold is to be capable of carrying minimum 50% of M_H, with all double bottom tanks in way of the cargo hold being empty, at maximum draught.

(iii) Any cargo hold is to be capable of being empty, with all double bottom tanks in way of the cargo hold being empty, at the deepest ballast draught.

(c) Condition applicable for all notations, except when notation {**No MP**} is assigned

(i) Any cargo hold is to be capable of carrying M_{FULL} with fuel oil tanks in double bottom in way of the cargo hold, if any, being 100% full and ballast water tanks in the double bottom in way of the cargo hold being empty, at 67% of maximum draught.

(ii) Any cargo hold is to be capable of being empty with all double bottom tanks in way of the cargo hold being empty, at 83% of maximum draught.

(iii) Any two adjacent cargo holds are to be capable of carrying M_{Full} with fuel oil tanks in double bottom in way of the cargo hold, if any, being 100% full and ballast water tanks in the double bottom in way of the cargo hold being empty, at 67% of the maximum draught. This requirement to the mass of cargo and fuel oil in double bottom tanks in way of the cargo hold applies also to the condition where the adjacent hold is filled with ballast, if applicable.

(iv) Any two adjacent cargo holds are to be capable of being empty, with all double bottom tanks in way of the cargo hold being empty, at 75% of maximum draught.

(d) Additional conditions applicable for **BC-A** notation only

(i) Cargo holds, which are intended to be empty at maximum draught, are to be capable of being empty with all double bottom tanks in way of the cargo hold also being empty.

(ii) Cargo holds, which are intended to be loaded with high density cargo, are to be capable of carrying M_{HD} plus 10% of M_H, with fuel oil tanks in the double bottom in way of the cargo hold, if any, being 100% full and ballast water tanks in the double bottom being empty in way of the cargo hold, at maximum draught. In operation the maximum allowable cargo mass is to be limited to M_{HD}.

(iii) Any two adjacent cargo holds which according to a design loading condition may be loaded with the next holds being empty, are to be capable of carrying 10% of M_H in each hold in addition to the maximum cargo load according to that design loading condition, with fuel oil tanks in the double bottom in way of the cargo hold, if any, being 100% full and ballast water tanks in the double bottom in way of the cargo hold being empty, at maximum draught. In operation the maximum allowable mass is to be limited to the maximum cargo load according to the design loading conditions.

(e) Additional conditions applicable for ballast hold(s) only

Cargo holds, which are designed as ballast water holds, are to be capable of being 100% full of ballast water including hatchways, with all double bottom tanks in way of the cargo hold being 100% full, at any heavy ballast draught. For ballast holds adjacent to topside wing, hopper and double bottom tanks, it is to be strengthwise acceptable that the ballast holds are filled when the topside wing, hopper and double bottom tanks are empty.

(f) Additional conditions applicable during loading and unloading in harbour only

(i) Any single cargo hold is to be capable of holding the maximum allowable seagoing mass at 67% of maximum draught, in harbour condition.

(ii) Any two adjacent cargo holds are to be capable of carrying M_{Full} ,with fuel oil tanks in the double bottom in way of the cargo hold, if any, being 100% full and ballast water tanks in the double bottom in way of the cargo hold being empty, at 67% of maximum draught, in harbour condition.

(iii) At reduced draught during loading and unloading in harbour, the maximum allowable mass in a cargo hold may be increased by 15% of the maximum mass allowed at the maximum draught in sea-going condition, but is not to exceed the mass allowed at maximum draught in the sea-going condition. The minimum required mass may be reduced by the same amount.

(g) Hold mass curves

Based on the design loading criteria for local strength, as given in 1.2.5(b) to 1.2.5(f) (except 1.2.5(e)) above, hold mass curves are to be included in the loading manual and the loading instrument, showing maximum allowable and minimum required mass as a function of draught, in sea-going condition as well as during loading and unloading in harbour.

At other draughts than those specified in the design loading conditions above, the maximum allowable and minimum required mass is to be adjusted for the change in buoyancy acting on the bottom. Change in buoyancy is to be calculated using water plane area at each draught.

Hold mass curves for each single hold, as well as for any two adjacent holds, are to be included.

1.3 Shell and Deck Plating

1.3.1 The thickness of the shell plating and the deck plating is not to be less than required by Chapters 3, 7 and 11 of Part II, with the exception of 7.2.1, 7.2.2 and 7.3.1(b) of Part II that are not applicable to Bulk Carriers. The thickness of shell plating is also to comply with the following requirements.

(a) Shell plating

The thickness of the shell plating including bottom and side shell is not to be less than the value obtained from the following formula.

$$t = 0.0176 \cdot \alpha_p \cdot 1000b \sqrt{\frac{|P|}{C_a \sigma_y}} \qquad \text{mm}$$

$$\alpha_p = 1.2 - \frac{b}{2.1a}$$

where:

a = The longest edge of the panel, in m.

b = The shortest edge of the panel, in m.

σ_y = The yield stress of the plating material, in N/mm^2.

P = $10.06(d + 0.038L')$

Where:

d is the scantling draft in m, L' is the rule length in m not taken greater than 230 m.

C_a = Permissible bending stress coefficient for plate taken equal to:

= $\beta - \alpha \frac{\left|\frac{\sigma_{hg}}{0.9}\right|}{\sigma_y}$, not to be greater than C_{a-max}

Where:

Structural member	β	α	$C_{a\text{-}max}$
Longitudinally stiffened plating	1.05	0.5	0.95
Transversally stiffened plating	1.05	1.0	0.95

σ_{hg} the maximum hull girder stress in N/mm^2 over the hogging and sagging conditions calculated at the lower or upper end of the panel under consideration located above or below the horizontal neutral axis respectively, as defined in CR Rules Part II 3.2 (Hull girder bending strength).

(b) Side shell plating

The thickness of the side shell plating is not to be less than $\sqrt{L}$ or the value required in 1.3.1(a), whichever is greater.

1.3.2 Where it is intended to load the cargo so that some holds remain empty and abnormal hull girder shear stress occurs, the thickness of the side shell plating in way is required to be increased as required by 3.3 of Part II.

1.4 Double Bottoms

1.4.1 In general, the double bottom is to be constructed in accordance with Chapter 5 of Part II except that side girders are to be spaced approximately 3 m apart and solid floors are to be spaced not more than 3 m apart.

1.4.2 The depth of the center girder is to be same as double bottom height as required by 1.4.4(c). The thickness of center girder plate amidships is not to be less than the value obtained from the following formula.

$t = 0.055L + 5.9$ mm

where:
L = Length of ship, in m, as specified in 1.2.1 of Part II.

1.4.3 Where it is intended to load the cargo with specified or alternate holds empty, the depth of the center girder and the scantlings of plate floors and plate girders may be required to be increased.

1.4.4 Inner bottom plating

(a) The thickness of the inner bottom plating throughout holds is not to be less than the greater of as required by Chapter 5 of Part II and the following formula.

$$t = 4.55s\sqrt{\gamma hK} \quad \text{mm}$$

where:

s	=	Spacing of longitudinals, in m.
h	=	Vertical distance from the top of inner bottom plating to the upper deck at the centreline, in m.
γ	=	Cargo deadweight divided by the total volume of the holds excluding hatchways or, in specific cases, is the cargo deadweight of a particular hold divided by the volume of the hold excluding hatchway, in ton/m^3.
K	=	$\text{MAX}\left\{0.66; \frac{235}{\sigma_y}\right\}$ Where: σ_y = Specific minimum yield stress in N/mm^2.

(b) Where ore cargo or cargoes handled by grabs is to be carried, the thickness of the inner bottom plating is not to be less than 1.4.4(a) or the value obtained from the following formula, whichever is greater.

$$t_{grab} = 0.65 \times \sqrt{1000sK} \times \left(\frac{M_{GR}}{20}\right)^{0.25} \quad \text{mm}$$

where:

s	=	Spacing of inner bottom stiffeners, in m.
K	=	Material factor in accordance with 1.5.2(a) of Part II.
M_{GR}	=	Mass of unladen grab, in ton.

(c) Double bottom height

The height of the double bottom is not to be less than the lesser of :

$$d_{DB} = \frac{B}{20} \text{ or } 2\text{m}$$

However d_{DB} is not to be less than 0.76 m measured vertically from the plane parallel with keel line to inner bottom.

1.4.5 Inner bottom longitudinals

(a) The section modulus of inner bottom longitudinals is not to be less than required by the following formula:

$$Z = \frac{(100KCsh l^2)}{24 - 12f_B K} \qquad cm^3$$

where:

s	=	Spacing of inner bottom longitudinals, in m.
K	=	Material factor in accordance with 1.5.2(a) of Part II.
C	=	Coefficient as follows: Where the struts are not provided midway between floors: γ, but C is not to be less than 0.9. Where the struts are provided midway between floors: 0.6γ, but C is not to be less than 0.54.
h	=	Vertical distance from the top of inner bottom plating to the upper deck at the centreline, in m.
f_B	=	Ratio of the section modulus of transverse section of hull required in Chapter 3 of Part II when mild steel is used, to the actual section modulus of transverse section of hull at the bottom.
l	=	Bending span between floors, in m.

(b) The section modulus of inner bottom longitudinals, however, is not to be less than 75% of that required for bottom longitudinals.

1.4.6 Bottom longitudinals

The section modulus of bottom longitudinals is not to be less than that obtained from the following formula:

$$Z = \frac{100sKCl^2}{24 - 15.5f_B K} \times (d + 0.026L') \qquad cm^3$$

where:

s	=	Spacing of inner bottom longitudinals, in m.
K	=	Material factor in accordance with 1.5.2(a) of Part II.
C	=	Coefficient as follows: a) Where the struts are not provided midway between floors, C is not to be less than 1.0. b) Where the struts specified in 31.2.6 are provided midway between floors: - 0.625 (for lower parts of deep tanks and holds which become empty in fully loaded condition) - 0.3γ+0.2 (elsewhere) - C is not to be less than 0.50. Furthermore, where the width of vertical stiffeners provided on floors and that of struts are especially large, the coefficient may be properly reduced.
f_B	=	Ratio of the section modulus of transverse section of hull, refer to 1.4.5(a).
γ	=	As specified in 1.4.4(a).
l	=	Bending span between floors, in m.
d	=	As specified in 1.3.1(a).
L'	=	As specified in 1.3.1(a).

1.5 Lower Wing Tanks

1.5.1 The thickness of the closely spaced floor or transverse fitted in the lower wing tank is to be as required by 5.3.1 (a) of Part II.

1.5.2 Tank bulkhead plating

(a) The thickness of the lower wing tank plating is not to be less than as required by Chapter 16 of Part II where the depth h, in m, is to be measured from the lower edge of the plate to the point midway between the half-depth of the tank and the top of the overflow pipe, nor less than as required by the formula given in 1.4.4(b) above where h may be reduced by the height measured from the lower edge of the plate to the inner bottom plating.

(b) Where the lower wing tank sloping bulkhead plating within or near the hatchway, the thickness of the plating of that part may be required to be suitably increased.

1.5.3 Stiffeners in lower wing tanks

(a) The section modulus of members in lower wing tanks is not to be less than:

$C\ sh\,l^2$ cm^3

where:

C = 7.80 for vertical side shell frames and vertical bulkhead stiffeners.
= 7.41 for side shell longitudinals.
= 7.02 for longitudinal stiffeners on bulkhead.

h = For side shell members, the distance from the longitudinal or from the middle of vertical members, to the load line, or to a point located 2/3 of the distance from the keel to the bulkhead or freeboard deck, whichever is greater, in m.
= For bulkhead stiffeners, the distance from the middle of stiffener to a point located 2/3 of the distance from the top of the tank to the top of the overflow pipe, in m.

s = Spacing of the members, in m.

l = Unsupported span, in m.

(b) The scantling of bilge longitudinals is to be graduated between those required for bottom longitudinals and lowest side shell longitudinals.

1.5.4 Transverse Webs

(a) The section modulus of transverse webs, where fitted, is not to be less than that required by 1.5.3 (a) where C is to be taken as 7.11 for webs on side shell, bottom shell and wing tank bulkhead.

(b) Transverse webs are to be in line with the solid floors and are to have depths of not less than 0.145 of span *l*. In general, the depth is to be not less than twice the depth of the slot.

1.6 Hold Frames

1.6.1 The section modulus of hold frames is to be as required by Chapter 6 of Part II and not to be less than that obtained from the following equation.

$Z = 3.5\ sh\,l^2$ cm^3

where:

s = Frame spacing, in m

l = Unsupported span of frames, in m

h = $h_v + C_1\,(1.09 - 0.65\,h_v/d)$ in m

h_v = Vertical distance from the middle of *l* to the load line, in m

C_1 = As defined in 3.2 of part II
d = Molded draft, in m

1.6.2 The thickness of web and upper end brackets of hold frames is not to be less than the value obtained from the following formula. And the thickness of lower end brackets of hold frames is not to be less than 2 mm greater than the value given in the following formula:

$0.03L + 7.0$ mm

where:
L = Length of ship, in m.
Where, however, L exceeds 200 m, L is to be taken as 200 m.

1.6.3 For decks supported by longitudinal beams and topside wing tank sloping bulkheads stiffened by longitudinal stiffeners in association with widely spaced deep transverses in topside wing tanks, h for ordinary hold frames between deep transverses may be taken as zero.

1.7 Topside Wing Tanks

1.7.1 The thickness of the sloping bulkheads is not to be less than as required in Chapter 11 of Part II for 2nd deck, but at least in compliance with the requirements of Chapter 16 of Part II.

1.7.2 Stiffeners in topside wing tanks

(a) The section modulus of members in topside wing tanks is not to be less than:

$C\,sh\,l^2$ cm^3

where:
C = 7.41 for side shell longitudinals.
= 7.02 for bulkhead longitudinals.
= 7.8 for vertical side frames and bulkhead stiffeners.
= 8.19 for deck longitudinals.
s = Spacing of members, in m.
h = Distance from the middle of *l* to a point 2/3 of the distance from the top of the tank to the top of the overflow pipe except for deck members where h is not to be less than that given in row 1 of Table II 9-1, in m.
l = Unsupported span, in m.

(b) When sloping bulkheads and the side shell in way of topside wing tanks are framed transversely, stiffeners of sloping bulkheads are to be as required by Chapter 16 of Part II and frames of the side shell are to be as required by 6.6 of Part II.

1.7.3 The section modulus of deck longitudinals is not to be less than as required by 9.3 of Part II.

1.7.4 Transverse webs

(a) The section modulus of transverse webs, where fitted, in topside wing tanks is not to be less than that required by 1.7.2(a) where C is to be taken as 7.11 for shell and sloping-bulkhead webs and deck transverses.

(b) The depth of webs is not to be less than 1/12 of the span *l* and the thickness is not to be less than 1% of the depth plus 4 mm, but is not to be less than 8 mm and need not exceed 11 mm.

(c) In general, the depth of webs is not to be less than twice the depth of the slot.

1.8 Double Side Tanks

In general, the double side tanks are to be constructed in accordance with Chapter 3 of Part II for hull girder strength.

1.8.1 Longitudinal bulkhead plating

(a) The thickness of the longitudinal bulkhead plating is not to be less than the value derived from 16.2.2 of Part II with the distance h multiplied by K, the material factor, or the value obtained by the following formula, whichever is greater:

$$t = Cs\sqrt{Kh} + 2.5 \quad \text{mm}$$

where:

s	=	Spacing of longitudinal stiffeners, in m.
h	=	Vertical distance from the lower end of the panel under consideration to the upper deck at the centreline, in m.
K	=	Material factor in accordance with 1.5.2(a) of Part II.
C	=	Coefficient given by the following formula, is not to be taken less than 3.2 :
	=	$4.25ab\sqrt{\gamma}$
a	=	As given by the following formula:
	=	$0.615 + 0.11\frac{l}{s}$, when $1.0 \le \frac{l}{s} < 3.5$
	=	1.0, when $3.5 \le \frac{l}{s}$
l	=	Spacing between transverse webs, in m.
b	=	As given by the following formula:
	=	1.0, when $\beta \le 40°$
	=	$1.4 - 0.01\beta$, when $40° < \beta \le 80°$
	=	0.6, when $80° \le \beta$
β	=	Angle of inclination (degrees) of the bulkhead plating under consideration to the horizontal plane
γ	=	As specified in 1.4.4(a).

(b) Where ore cargo or cargoes handled by grabs is to be carried, the thickness of the lower strake of the longitudinal bulkhead is not to be less than the value obtained from the following formula:

$$t_{grab} = 0.52\sqrt{1000sK} \times \left(\frac{M_{GR}}{20}\right)^{0.25} + 2.5 \qquad \text{mm}$$

where:

s	=	Spacing of longitudinals on longitudinal bulkhead, in m.
K	=	Material factor in accordance with 1.5.2(a) of Part II.
M_{GR}	=	Mass of unladen grab, in ton.

1.8.2 Longitudinal bulkhead stiffeners

The section modulus of the longitudinal bulkhead stiffeners is not to be less than the value derived from 14.2.3 of Part II multiplied by K, the material factor, or the value obtained from the following formula, whichever is greater.

$$Z = C_1 C_2 s h l^2 \quad \text{cm}^3$$

where:

s = Spacing of longitudinal stiffeners, in m.

h = Vertical distance from the stiffener under consideration to the upper deck at the centreline, in m.

l = Bending span between transverse webs, in m.

C_1 = Coefficient given in below according to the values of β and γ specified in 1.8.1(a).

Angle β	C_1
β≤40°	130γ
40°<β≤ 80°	(214-2.1β) γ
β≥ 80°	46γ

β = Angle of inclination of the bulkhead plating under consideration to the horizontal plane, in degrees

γ = As specified in 1.4.4(a).

C_2 = Coefficient given by the following formula:

$$= \frac{K}{24 - \alpha K}$$

K = Material factor in accordance with 1.5.2(a) of Part II.

α = Either α_1 or α_2 according to the value of z,

when $z > z_B, \alpha_1 = 15.5 f_D \frac{(z - z_B)}{z_0}$

when $z \le z_B, \alpha_2 = 15.5 f_B \left(1 - \frac{z}{z_B}\right)$

f_B = Ratio of the section modulus of the transverse section of the hull on the basis of mild steel in accordance with Chapter 3 of Part II to the actual section modulus of the transverse section of the hull at the bottom.

z = Vertical distance from the top of the keel to the longitudinal under consideration, in m.

z_B = Vertical distance from top of the keel amidship to the horizontal neutral axis of the transverse section of the hull, in m.

z_0 = Vertical distance from the neutral axis to the top of the strength deck beam at the side of the ship or obtained from the following formula, in m, whichever is greater.

$$= Y\left(0.9 + 0.2\frac{X}{B}\right)$$

X = Horizontal distance from the top of continuous strength member to the centre line of the ship, in m.

Y = Vertical distance from the neutral axis to the top of the continuous strength member, in m.

B = Breadth of ship, in m.

f_D = Ratio of the section modulus of the transverse section of the hull on the basis of mild steel in accordance with Chapter 3 of Part II to the actual section modulus of the transverse section of the hull at the strength deck.

1.8.3 Horizontal stringers of side tanks

The plating thickness of the double side tank's horizontal stringers is to comply with the requirements of Table II 16-1 of Part II.

1.9 Transverse Bulkhead in Cargo Hold

1.9.1 Transverse bulkhead in ballast hold

The scantlings of the transverse bulkhead in ballast hold is to comply with the requirements specified in 16.2 of Part II. Alternatively, the transverse corrugated bulkhead scantlings may be determined by direct calculations that are to be submitted for review.

1.9.2 Transverse bulkhead in non-ballast hold

In general, the scantlings of the transverse bulkhead in non-ballast hold is to comply with the requirements given in Chapter 14 of Part II with the exception of 14.2.4(b). The section modulus of transverse bulkhead vertical corrugated bulkhead in non-ballast hold is not to be less than the value obtained from following formula.

$$Z = \frac{1000SKhl_e^2}{71(\omega_1 + \omega_2 + 2)} \qquad \text{cm}^3$$

where:

S = Half-pitch length of the corrugation, in m.

K = Material factor in accordance with 1.5.2(b) of Part II.

h = Vertical distance taken from the mid-effective length l_e as specified in Fig. III 1-1, to the upper deck at the centreline, in m.

l_e = Effective length of stiffening member, in m, and for bulkhead stiffeners, it is to be taken as l -e_1 - e_2, as specified in Fig. III 1-1.

$$e_i = \text{MIN}\{\alpha l; a_i\}$$

Where:

a_i and l specified in Fig. III 1-1

$\alpha = 0$ for $\mu \leq 1.0$

$\alpha = 0.5 - \frac{1}{\sqrt{2\mu + 2}}$ for $\mu > 1.0$

and

$$\mu = 10Z_s/M_2$$

Where:

Z_s = section modulus, in cm^3, of horizontal section of stool adjacent to deck or tank top over corrugated half-pitch length S.

$$M_2 = \frac{500Sl^3}{71}$$

ω_1, ω_2 = An end constraint factor, see Fig. III 1-1

$$\omega_i = \text{MIN}\left\{1.0; \frac{\delta \cdot t_{s,i}}{t_{m,i}}\right\}$$

Where:

$t_{m,i}$ and $t_{s,i}$ are the thickness in mm of the corrugated panel flange and that of the attached stool plating at the considered connection (see Fig. III 1-1), respectively.

$$\delta = \frac{0.932\sqrt{K}}{\xi}$$

$$\xi = \text{MAX}\{1.0; \eta + 0.333\}$$

$$\eta = \text{MIN}\left\{1.0; \frac{50t_m\sqrt{K}}{a}\right\}, \text{for welded section}$$

$$\eta = \text{MIN}\left\{1.0; \frac{60t_m\sqrt{K}}{a}\right\}, \text{for cold form section}$$

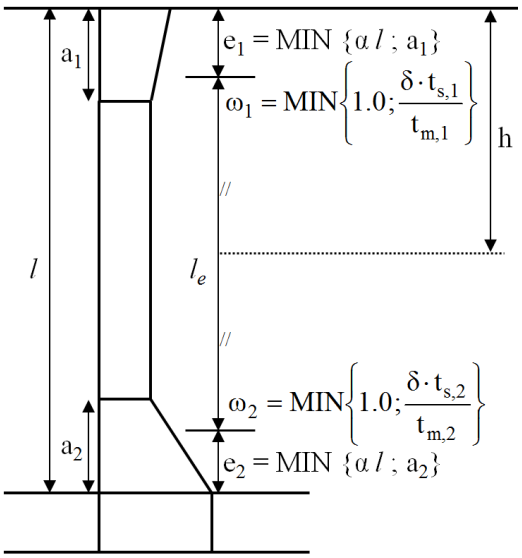

Fig. III 1-1
End Connection of Watertight Transverse Bulkhead

1.9.3 Transverse bulkhead in cargo hold with iron ore cargo loading in alternate condition

In general, the scantlings of the transverse bulkhead in cargo hold with iron ore cargo loading in alternate condition is to comply with the requirements specified in 1.9.1 and 1.9.2 as applicable, and those in 16.2 of Part II, which the vertical distance h given in 16.2.2 is to be substituted by 0.426γh or 0.639h, whichever is greater.

Alternatively, the scantlings of the transverse corrugated bulkhead in cargo hold with iron ore loading in alternate condition may be determined by direct calculations that are to be submitted for review.

1.9.4 Lower strake of transverse bulkhead in cargo hold

Where ore cargo or cargoes handled by grab is to be carried, the thickness of lower strake of the transverse bulkhead in hold is not to be less than the value obtained from the following formula:

$$t_{grab} = 0.55\sqrt{1000sK} \times \left(\frac{M_{GR}}{20}\right)^{0.25} + 2.5 \qquad \text{mm}$$

where:

s	=	Spacing of longitudinals on lower strake, in m.
K	=	Material factor in accordance with 1.5.2(a) of Part II.
M_{GR}	=	Mass of unladen grab, in ton.

1.10 Requirements for the Fitting of a Forecastle

1.10.1 Application and definitions

These requirements, apply to all bulk carriers, ore carriers and combination carriers, as defined in 2.1.2, Part I of the Rules and this Chapter, which are contracted for construction on or after 1 January 2004.

Such ships are to be fitted with an enclosed forecastle on the freeboard deck. The required dimensions of the forecastle are defined in 1.10.2.

The structural arrangements and scantlings of the forecastle are to comply with the relevant requirements of the Rules.

1.10.2 Dimensions

The forecastle is to be located on the freeboard deck with its aft bulkhead fitted in way or aft of the forward bulkhead of the foremost hold, as shown in Fig. III 1-2.

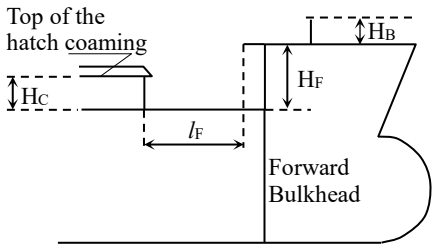

Fig. III 1-2
Forecastle

The forecastle height H_F above the main deck is to be not less than:

- the standard height of a superstructure as specified in the International Convention on Load Line 1966 and its Protocol of 1988, or

- H_C + 0.5 m, where H_C is the height of the forward transverse hatch coaming of cargo hold No.1,

whichever is the greater.
All points of the aft edge of the forecastle deck are to be located at a distance l_F :

$$l_F \leq 5\sqrt{H_F - H_C}$$

from the hatch coaming plate in order to apply the reduced loading to the No.1 forward transverse hatch coaming and No.1 hatch cover in applying 1A.7.4(a) and 1A.7.5(b) of Part II.
A breakwater is not to be fitted on the forecastle deck with the purpose of protecting the hatch coaming or hatch covers. If fitted for other purposes, it is to be located such that its upper edge at centre line is not less than HB/tan20° forward of the aft edge of the forecastle deck, where HB is the height of the breakwater above the forecastle (see Fig. III 1-2).

1.10.3 If the requirements of 1.10.2 hinders hatch cover operation, the aft bulkhead of the forecastle may be fitted forward of the forward bulkhead of the foremost cargo hold provided the forecastle length is not less than 7% of ship length abaft the forward perpendicular where the ship length and forward perpendicular are defined in the International Convention on Load Line 1966 and its Protocol 1988.

1.11 Coating

Protective coatings of cargo holds are to comply with the requirements in 23.1.6 of Part II.

Chapter 1A

Additional Requirement for Bulk Carriers

1A.1 General

1A.1.1 This requirements in this chapter apply to sea-going single deck bulk carriers of single or double side skin, with a double bottom, hopper side tanks and top side tanks fitted below the upper deck.

1A.1.2 Unless otherwise stated in this chapter, the requirements as given in this chapter apply to bulk carriers with length of 150 m and above and intended to carry cargoes having bulk density of 1.0 t/m^3 or above.

1A.2 Loading Manuals and Loading Instruments for Bulk Carriers

1A.2.1 Application

Bulk carriers, Ore Carriers and Combination Carriers of 150 m length and above, are to be provided with an approved Loading Manual and approved computer-based Loading Instrument, in accordance with 1A.2.2, through 1A.2.5.

1A.2.2 Loading manual

Loading manual is a document which describes:

(a) the loading conditions on which the design of the ship has been based, including permissible limits of still water bending moments and shear forces;

(b) the results of the calculations of still water bending moments, shear forces and where applicable, limitations due to torsional loads;

(c) for single skin bulk carriers, envelope results and permissible limits of still water bending moments and shear forces in the hold flooded condition according to 1A.4;

(d) the cargo hold(s) or combination of cargo holds that might be empty at full draught. If no cargo hold is allowed to be empty at full draught, this is to be clearly stated in the loading manual;

(e) maximum allowable and minimum required mass of cargo and double bottom contents of each hold as a function of the draught at mid-hold position;

(f) maximum allowable and minimum required mass of cargo and double bottom contents of any two adjacent holds as a function of the mean draught in way of these holds. This mean draught may be calculated by averaging the draught of the two mid-hold position;

(g) maximum allowable tank top loading together with specification of the nature of the cargo for cargoes other than bulk cargoes;

(h) maximum allowable load on deck and hatch covers. If the vessel is not approved to carry load on deck or hatch covers. This is to be clearly stated in the loading manual;

(i) the maximum rate of ballast change together with the advice that a load plan is to be agreed with the terminal on the basis of the achievable rates of change of ballast.

1A.2.3 Loading instrument

A loading instrument is an instrument, which is either analog or digital, by means of which it can be easily and quickly ascertained that, at specified read-out points, the still water bending moments, shear forces, and the still water torsional moments and lateral loads, where applicable, in any load or ballast condition will not exceed the specified permissible values. In addition to above requirements, it is to ascertain as applicable that:

(a) the mass of cargo and double bottom contents in way of each hold as a function of the draught at mid-hold position;

(b) the mass of cargo and double bottom contents of any two adjacent holds as a function of the mean draught in way of these holds;

(c) the still water bending moment and shear forces in the hold flooded conditions according to 1A.4 are within permissible values.

1A.2.4 Conditions of approval of loading manuals

The approved Loading Manual is to be based on the final data of the ship. The Manual is to include the design loading and ballast conditions upon which the approval of the hull scantlings is based. In case of modifications resulting in changes to the main data of the ship, a new approved Loading Manual is to be issued. The Loading Manual must be prepared in a language understood by the users. If this language is not English, a translation into English is to be included. In addition to above requirements, the following conditions, subdivided into departure and arrival conditions as appropriate, are to be included in the Loading Manual:

(a) alternate light and heavy cargo loading conditions at maximum draught, where applicable;

(b) homogeneous light and heavy cargo loading conditions at maximum draught;

(c) ballast conditions. For vessels having ballast holds adjacent to topside wing, hopper and double bottom tanks, it is to be strength-wise acceptable that the ballast holds are filled when the topside wing, hopper and double bottom tanks are empty. Partial filling of the peak tanks is not acceptable in the design ballast conditions, unless effective means are provided to prevent accidental overfilling;

(d) short voyage conditions where the vessel is to be loaded to maximum draught but with limited amount of bunkers;

(e) multiple port loading/unloading conditions;

(f) deck cargo conditions, where applicable;

(g) typical loading sequences where the vessel is loaded from commencement of cargo loading to reaching full deadweight capacity, for homogeneous conditions, relevant part load conditions and alternate conditions where applicable. Typical unloading sequences for these conditions are also to be included. The typical loading/unloading sequences are to be developed to not exceed applicable strength limitations. The typical loading sequences are also to be developed paying due attention to loading rate and the deballasting capability;

(h) typical sequences for change of ballast at sea, where applicable.

1A.2.5 Conditions of approval of loading instrument

(a) The loading instrument is subjected to approval, which is to include:
  (i) verification of type approval, if any
  (ii) verification that the final data of the ship has been used
  (iii) acceptance of number and position of read-out points
  (iv) acceptance of relevant limits for all read-out points
  (v) checking of proper installation and operation of the instrument on board, in accordance with agreed test conditions, and that a copy of the operation manual is available.

(b) In addition to above requirements, the approval is to include followings:
  (i) acceptance of hull girder bending moment limits for all read-out points
  (ii) acceptance of hull girder shear force limits for all read-out points
  (iii) acceptance of limits for mass of cargo and double bottom contents of each hold as a function of draught
  (iv) acceptance of limits for mass of cargo and double bottom contents in any two adjacent holds as a function of draught.

1A.3 Side Structures

1A.3.1 Application

These requirements apply to the side structures within the cargo area of all single side skin bulk carriers.

1A.3.2 Scantlings of side structures

The thickness of the side shell plating and the section modulus and area of side frames are to be determined according to 1.3 and 1.6 in Part III. The scantlings of side hold frames immediately adjacent to the collision bulkhead are to be increased in order to prevent excessive imposed deformation on the shell plating. As an alternative, supporting structures are to be fitted which maintain the continuity of forepeak stringers within the foremost hold.

1A.3.3 Minimum thickness of frame webs

The thickness of frame webs within the cargo area is not to be less than $t_{w,\,min}$, in mm, given by:

$$t_{w,\,min} = 7.0+0.03L$$

Where L is the ship length, in m, as defined in 1.2.1 of Part II but need not be taken greater than 200 m.

The minimum thickness of frame webs in way of the foremost hold is not to be less than $t_{w1,\,min}$ in mm, given by:

$$t_{w1,\,min} = 1.15\ t_{w,\,min}$$

1A.3.4 Lower and upper brackets

The thickness of the frame lower bracket is not to be less than the greater of t_w and $t_{w,\,min}$+2 mm, where t_w is the fitted thickness of the side frame web. The thickness of the frame upper bracket is not to be less than the greater of t_w and $t_{w,\,min.}$ The section modulus SM of the frame and bracket or integral bracket, and associated shell plating, at the locations shown in Fig. III 1A-1, is not to be less than twice the section modulus SM_F required for the frame midspan area. The dimensions of the lower and upper brackets are not to be less than those shown in Fig. III 1A-2. Structural continuity with the upper and lower end connections of side frames is to be ensured within topsides and hopper tanks by connecting brackets as shown in Fig. III 1A-3. The brackets are to be adequately stiffened against buckling. The section modulus of the side longitudinals and sloping bulkhead longitudinals which support the connecting brackets are to be determined

according to 1.5.3 and 1.7.2 in this Part by using the spacing S as shown in Fig. III 1A-3 with the span taken between transverses.

1A.3.5 Side frame sections

Frames are to be fabricated symmetrical sections with integral upper and lower brackets and are to be arranged with soft toes. The side frame flange is to be curved (not knuckled) at the connection with the end brackets. The radius of curvature is not to be less than r, in mm, given by:

$$r = \frac{0.4b_f^2}{t_f}$$

Where b_f and t_f are the flange width and thickness of the brackets, respectively, in mm. The end of the flange is to be sniped. In ships less than 190 m in length, mild steel frames may be asymmetric and fitted with separate brackets. The face plate or flange of the bracket is to be sniped at both ends. Brackets are to be arranged with soft toes. The web depth to thickness ratio of frames is not to exceed the following values:

- $60 \cdot K^{0.5}$ for symmetrically flanged frames
- $50 \cdot K^{0.5}$ for asymmetrically flanged frames

where K=1.0 for ordinary hull structural steel and K < 1 for higher tensile steel according to 1.5.2(a) in Part II.
The outstanding flange is not to exceed $10 \cdot K^{0.5}$ times the flange thickness.

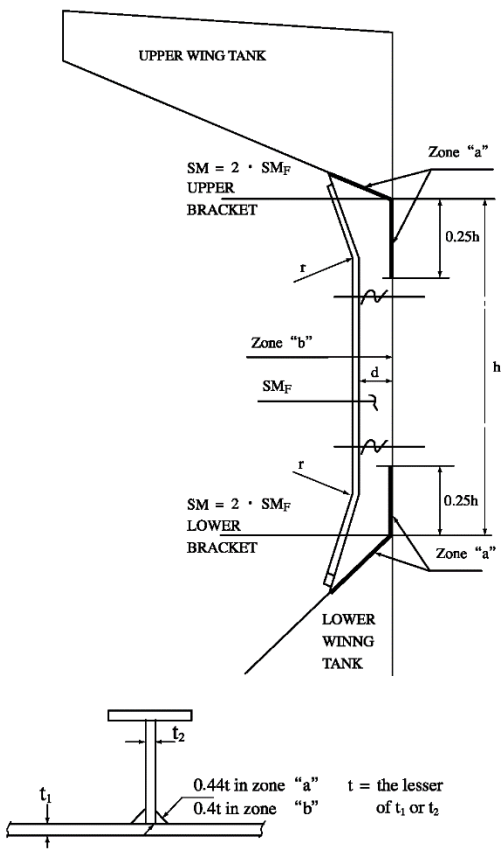

Fig. III 1A-1
Typical Main Frame

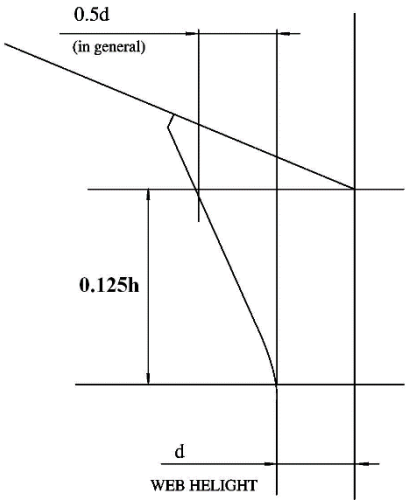

Fig. III 1A-2
Minimum Dimension of Brackets

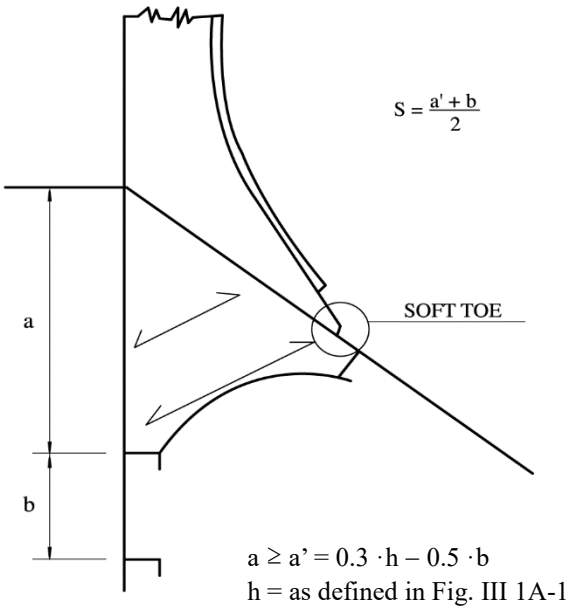

Fig. III 1A-3
Connecting Bracket

1A.3.6 Tripping brackets

In way of the foremost hold, side frames of asymmetrical section are to be fitted with tripping brackets at every two frames, as shown in Fig. III 1A-4.

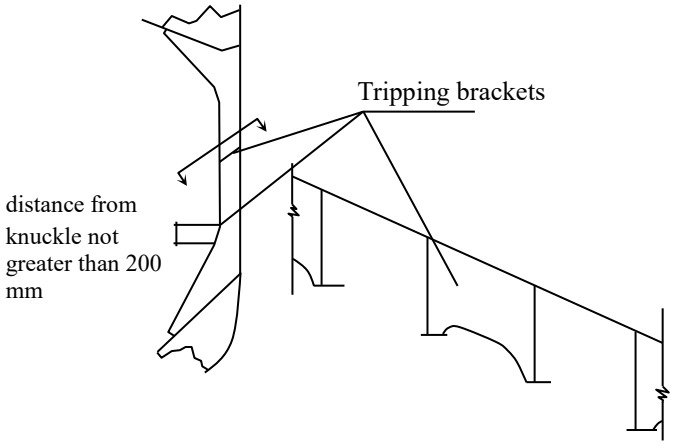

Fig. III 1A-4
Tripping Bracket

1A.3.7 Weld connections of frames and end brackets

Double continuous welding is to be adopted for the connections of frames and brackets to side shell. Hopper and upper wing tank plating and web to face plates. For this purpose, the weld throat is to be (see Fig. III 1A-1).

- 0.44t in zone "a"
- 0.4t in zone "b"

Where t is the thinner of the two connected members.

Where the hull form is such to prohibit an effective fillet weld, edge preparation of the web of frame and bracket may be required, in order to ensure the same efficiency as the weld connection stated above.

1A.3.8 Minimum thickness of side shell plating

The thickness of side shell plating located between hopper and upper wing tanks is not to be less than $t_{p,min}$ in mm, given by:

$$t_{p.min} = \sqrt{L}$$

1A.4 Longitudinal Strength of Hull Girder in Flooded Condition

1A.4.1 Application and definitions

These requirements of 1A.4 are to be complied with in respect of the flooding of any cargo hold of bulk carriers with notation **BC-A**, **BC-B**, as defined in 1.2. Such ships are to have their hull girder strength checked for specified flooded conditions, in each of the following cargo and ballast loading conditions:

(a) ballast condition (at departure and arrival),

(b) homogeneous loading condition (at departure and arrival),

(c) all specific non-homogeneous loading condition (at departure and arrival),

(d) the other loading condition which are deemed necessary by the Society.

1A.4.2 Flooding conditions

(a) Floodable holds

Each cargo hold is to be considered individually flooded up to the equilibrium waterline, except that cargo holds of double side skin construction of not less than 1000 mm breadth at any location within the hold length, measured perpendicular to the side shell in ships need not be considered flooded.

(b) Loads

The still water loads in flooded conditions are to be calculated for the above cargo and ballast loading conditions. The wave loads in the flooded conditions are assumed to be equal to 80% of the most probable maximum lifetime wave load, as given in 3.2.2, Part II of the Rules.

1A.4.3 Flooding criteria

To calculate the weight of ingressed water, the following assumptions are to be made:

(a) The permeability of empty cargo spaces and volume left in loaded cargo spaces above any cargo is to be taken as 0.95.

(b) Appropriate permeabilities and bulk densities are to be used for any cargo carried. For iron ore, a minimum permeability of 0.3 with a corresponding bulk density of 3.0 t/m³ is to be used. For cement, a minimum permeability of 0.3 with a corresponding bulk density of 1.3 t/m³ is to be used. In this respect, "permeability" for solid bulk cargo means the ratio of the floodable volume between the particles, granules or any larger pieces of the cargo, to the gross volume of the bulk cargo. For packed cargo conditions (such as steel mill products), the actual density of the cargo is to be used with a permeability of zero.

1A.4.4 Stress assessment

The actual hull girder bending stress σ_{fld}, in N/mm², at any location is given by:

$$\sigma_{fld} = \frac{M_{sf} + 0.8M_w}{W_Z} \cdot 10^3$$

where:

M_{sf} = Still water bending moment, in kN·m, in the flooded conditions for the section under consideration.

M_w = Wave bending moment, in kN·m, as given in 3.2.2, Part II of the Rules for the section under consideration.

W_Z = Section modulus, in cm³, for the corresponding location in the hull girder.

The actual hull girder shear stress τ_{fld}, in N/mm², at any location is given by:

$$\tau_{fld} = \frac{0.5(F_{sf} \cdot f_{sfc} + 0.8F_w) \cdot m}{I \times t} \cdot 10^2$$

where:

F_{sf} = Still water shear force, in kN, in the flooded conditions for the section under consideration.

F_w = Wave shear force, in kN, as given in 3.3, Part II of the Rules for the section under consideration.

f_{sfc} = Still water shear force correction factor for loading condition with empty holds, to be determined at the discretion of the Society.

I, m = As defined in 3.3, Part II of the Rules.

t = Thickness of plating, in mm.

1A.4.5 Strength criteria

The damaged structure is assumed to remain fully effective in resisting the applied loading. The calculated hull girder bending and shear stresses, in N/mm^2, are not to exceed the allowable values given below:

in bending : σ_a = 175/K
in shear : τ_a = 110/K

K is as defined in 1.5.2(a) of Part II of the Rules. Axial stress buckling strength is to be in accordance with acceptable criteria.

1A.5 Evaluation of Scantlings of Corrugated Transverse Watertight Bulkheads in Flooded Hold

1A.5.1 Application and definitions

These requirements apply to all single side skin bulk carriers, of 150 m in length and above, intended for the carriage of solid bulk cargoes having bulk density of 1.0 t/m³,or above with vertically corrugated transverse watertight bulkheads. The net thickness t_{net} is the thickness obtained by applying the strength criteria given in 1A.5.4. The required thickness is obtained by adding the corrosion addition t_s, given in 1A.5.6 to the net thickness t_{net}. In this requirement, homogeneous loading condition means loading condition in which the ratio between the highest and the lowest filling ratio, evaluated for each hold, does not exceed 1.20, to be corrected for different cargo densities.

1A.5.2 Load model

(a) General

The loads to be considered as acting on the bulkheads are those given by the combination of the cargo loads with those induced by the flooding of one hold adjacent to the bulkhead under examination. In any case, the pressure due to the flooding water alone is to be considered. The most severe combinations of cargo induced loads and flooding loads are to be used for the check of the scantlings of each bulkhead, depending on the loading conditions included in the loading manual:

- homogeneous loading conditions;
- non-homogeneous loading conditions;

considering the individual flooding of both loaded and empty holds. The specified design load limits for the cargo holds are to be represented by loading conditions defined by the Designer in the loading manual. Non-homogeneous part loading conditions associated with multiport loading and unloading operations for homogeneous loading conditions need not to be considered according to these requirements. Holds carrying packed cargoes are to be considered as empty holds for this application. Unless the ship is intended to carry, in non-homogeneous conditions, only iron ore or cargo having bulk density equal or greater than 1.78 t/m³, the maximum mass of cargo which may be carried in the hold is also to be considered to fill that hold up to the upper deck level.

(b) Bulkhead corrugation flooding head

The flooding head h_f (see Fig. III 1A-5) is the distance, in m, measured vertically with the ship in the upright position, from the calculation point to a level located at a distance d_f, in m, from the baseline equal to:

(i) in general

- D for the foremost transverse corrugated bulkhead.
- 0.9 D for the other bulkheads.

Where the ship is to carry cargoes having bulk density less than 1.78 t/m³ in non- homogenous loading conditions, the following values can be assumed:

- 0.95 D for the foremost transverse corrugated bulkhead.

- 0.85 D for the other bulkheads.

(ii) for ships less than 50,000 tons deadweight with Type B freeboard

- 0.95 D for the foremost transverse corrugated bulkhead.
- 0.85 D for the other bulkheads.

Where the ship is to carry cargoes having bulk density less than 1.78 t/m^3 in non-homogeneous loading conditions, the following values can be assumed:

- 0.9 D for the foremost transverse corrugated bulkhead.
- 0.8 D for the other bulkheads.

D is the distance, in m, from the baseline to the freeboard deck at side amidship (see Fig. III 1A-5).

(c) Pressure in the non-flooded bulk cargo loaded holds

At each point of the bulkhead, the pressure P_c, in kN/m^2, is given by:

$$P_c = \rho_c \cdot g \cdot h_1 \cdot \tan^2\gamma$$

where:

ρ_c	=	Bulk cargo density, in t/m^3.
g	=	9.81 m/s^2, gravity acceleration.
h_1	=	Vertical distance, in m, from the calculation point to horizontal plane corresponding to the volume of the cargo (see Fig. III 1A-5), located at a distance d_1, in m, from the baseline.
γ	=	45°-(φ/2)
φ	=	Angle of repose of the cargo, in degrees, that may generally be taken as 35° for iron ore and 25° for cement.

The force F_c, in kN, acting on a corrugation is given by:

$$F_c = \rho_c \cdot g \cdot S_1 \cdot \frac{(d_1 - h_{DB} - h_{LS})^2}{2} \cdot \tan^2\gamma$$

where:

ρ_c, g, d_1, γ	=	As given above.
S_1	=	Spacing of corrugations, in m (see Fig III 1A-6).
h_{LS}	=	Mean height of the lower stool, in m, from the inner bottom.
h_{DB}	=	Height of the double bottom, in m.

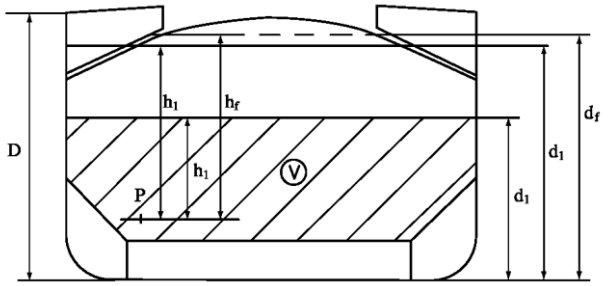

V = Volume of cargo
P = Calculation point

Fig. III 1A-5
Definition of h_1 and d_1

(d) Pressure in the flooded holds

(i) Bulk cargo holds

Two cases are to be considered, depending on the values of d_1 and d_f.

(1) $d_f \geq d_1$

At each point of the bulkhead located at a distance between d_1 and d_f from the baseline, the pressure $P_{c,f}$ in kN/m², is given by:

$$P_{c,f} = \rho \cdot g \cdot h_f$$

where:

ρ = Sea water density, in t/m³.
g = As given in 1A.5.2(c).
h_f = Flooding head as defined in 1A.5.2(b).

At each point of the bulkhead located at a distance lower than d_1 from the baseline, the pressure $P_{c,f}$, in kN/m², is given by:

$$P_{c,f} = \rho \cdot g \cdot h_f + [\rho_c - \rho \cdot (1\text{-perm})] \cdot g \cdot h_1 \cdot \tan^2\gamma$$

where:

ρ, g, h_f = As given above.
ρ_c, h_1, γ = As given in 1A.5.2(c).
perm = Permeability of cargo, to be taken as 0.3 for ore (corresponding bulk cargo density for iron ore may generally be taken as 3.0 t/m³), coal cargoes and for cement (corresponding bulk cargo density for cement may generally be taken as 1.3 t/m³).

The force $F_{c,f}$, in kN, acting on a corrugation is given by:

$$F_{c,f} = S_1 \cdot \left[\rho \cdot g \cdot \frac{(d_f - d_1)^2}{2} + \frac{\rho \cdot g(d_f - d_1) + (P_{c,f})_{le}}{2} \cdot (d_1 - h_{DB} - h_{LS})\right]$$

where:

ρ = As given above.
S_1, g, d_1, h_{DB}, h_{LS} = As given in 1A.5.2(c).
d_f = As given in 1A.5.2(b).
$(P_{c,f})_{le}$ = Pressure, in kN/m², at the lower end of the corrugation.

(2) $d_f < d_1$

At each point of the bulkhead located at a distance between d_f and d_1 from the baseline, the pressure $P_{c,f}$, in kN/m², is given by:

$$P_{c,f} = \rho_c \cdot g \cdot h_1 \cdot \tan^2 \gamma$$

where:

ρ_c, g, h_1, γ = Given in 1A.5.2(c).

At each point of the bulkhead located at a distance lower than d_f from the baseline, the pressure $P_{c,f,}$ in kN/m^2, is given by:

$$P_{c,f} = \rho \cdot g \cdot h_f + [\rho_c \cdot h_1 - \rho \cdot (1\text{-perm}) \cdot h_f] \cdot g \cdot \tan^2 \gamma$$

where:

ρ, h_f, perm = As given above.

ρ_c, g, h_1, γ = As given 1A.5.2 (c).

The force $F_{c,f}$, in kN, acting on a corrugation is given by:

$$F_{c,f} = S_1 \cdot \left[\rho_c \cdot g \cdot \frac{(d_1 - d_f)^2}{2} \cdot \tan^2 \gamma + \frac{\rho_c \cdot g(d_1 - d_f) \cdot \tan^2 \gamma + (P_{c,f})_{le}}{2} \cdot (d_f - h_{DB} - h_{LS})\right]$$

where:

S_1, ρ_c, g, d_1, γ, h_{DB}, h_{LS} = As given in 1A.5.2(c).

D_f = As given in 1A.5.2(b).

$(P_{c,f})_{le}$ = Pressure, in kN/m^2, at the lower end of the corrugation.

(ii) Pressure in empty holds due to flooding water alone

At each point of the bulkhead, the hydrostatic pressure P_f induced by the flooding head h_f is to be considered.

The force F_f, in kN, acting on a corrugation is given by:

$$F_f = S_1 \cdot \rho \cdot g \cdot \frac{(d_f - h_{DB} - h_{LS})^2}{2}$$

where:

S_1, g, h_{DB}, h_{LS} = As given in 1A.5.2(c).

ρ = As given in 1A.5.2(d)(i)(1).

d_f = As given in 1A.5.2(b).

(e) Resultant pressure and force

(i) Homogeneous loading conditions

At each point of the bulkhead structures, the resultant pressure P, in kN/m^2, to be considered for the scantlings of the bulkhead is given by:

$$P = P_{c,f} - 0.8P_c$$

The resultant force F, in kN, acting on a corrugation is given by:

$$F = F_{c,f} - 0.8F_c$$

(ii) Non-homogeneous loading conditions

At each point of the bulkhead structures, the resultant pressure P in kN/m^2, to be considered for the scantlings of the bulkhead is given by:

$$P = P_{c,f}$$

The resultant force F, in kN, acting on a corrugation is given by:

$$F = F_{c,f}$$

1A.5.3 Bending moment and shear force

The bending moment M and the shear force Q in the bulkhead corrugations are obtained using the formulae given in (a) and (b) below. The M and Q values are to be used for the checks in 1A.5.4(e)

(a) Bending moment

The design bending moment M, in kN·m, for the bulkhead corrugations is given by:

$$M = \frac{F \cdot l}{8}$$

where:

F = Resultant force, in kN, as given in 1A.5.2(e),

l = Span of the corrugation, in m, to be taken according to Fig. III 1A-6 and Fig. III 1A-7.

(b) Shear force

The shear force Q, in kN, at the lower end of the bulkhead corrugations is given by:

$$Q = 0.8 \cdot F$$

where:

F = As given in 1A.5.2(e).

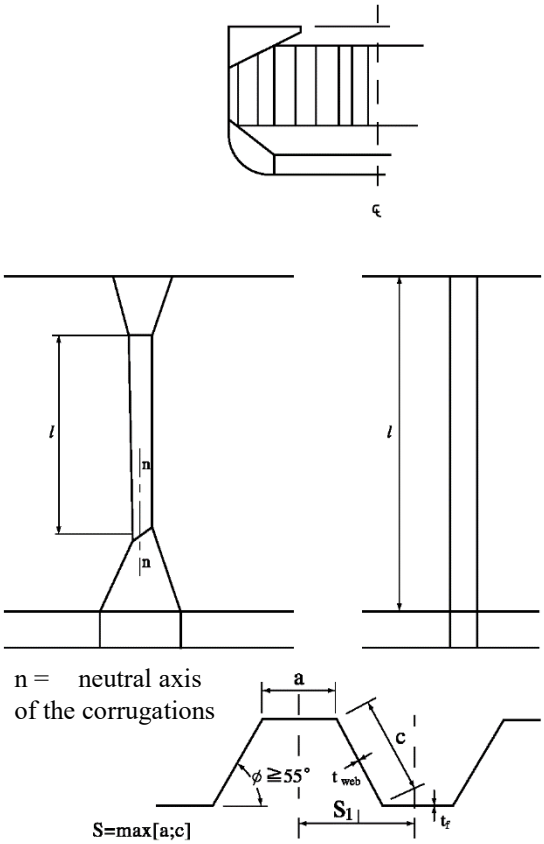

Fig. III 1A-6
Spacing of Corrugation

1A.5.4 Strength criteria

(a) General

The following criteria are applicable to transverse bulkheads with vertical corrugations (see Fig. III 1A-6, 7). For ships of 190 m of length and above, these bulkheads are to be fitted with a bottom stool, and generally with a top stool below deck. For smaller ships, corrugations may extend from inner bottom to deck.

The corrugation angle ϕ shown in Fig. III 1A-6 is not to be less than 55°.

Requirements for local net plate thickness are given in 1A.5.4(g).

In addition, the criteria as given in 1A.5.4(b) and 1A.5.4(c) are to be complied with. The thickness of the lower part of corrugations, considered in the application of 1A.5.4(b) and 1A.5.4(c) are to be maintained for a distance from the inner bottom or the top of the lower stool not less than 0.15l. The thickness of the middle part of corrugations, considered in the application of 1A.5.4(b) and 1A.5.4(d) are to be maintained for a distance from the deck or the bottom of the upper stool not greater than 0.3l. The section modulus of the corrugation in the remaining upper part of the bulkhead is not to be less than 75% of that required for the middle part, corrected for different yield stresses.

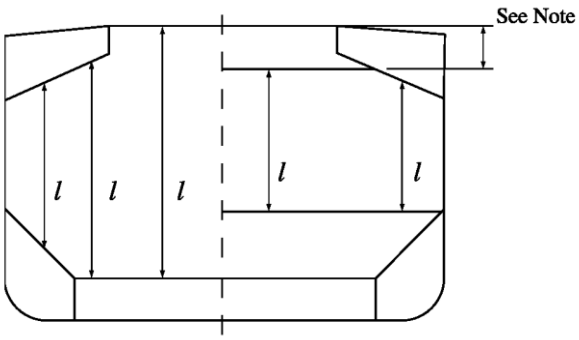

Note : For the definition of *l*, the internal end of the upper stool not to be taken more than a distance from the deck at the center line equal to:

(1) 3 times the depth of corrugations, in general.

(2) 2 times the depth of corrugations, for rectangular stool.

Fig. III 1A-7
Definition of *l*

(i) Lower stool

The height of the lower stool is generally to be not less than 3 times the depth of the corrugations. The thickness and material of the stool top plate is not to be less than those required for the bulkhead plating above. The thickness and material of the upper portion of vertical or sloping stool side plating within the depth equal to the corrugation flange width from the stool top is not to be less than the required flange plate thickness and material to meet the bulkhead stiffness requirement at lower end of corrugation. The thickness of the stool side plating and the section modulus of the stool side stiffeners is not to be less than those required by 14.2 in part II on the basis of the load model in 1A.5.2. The ends of stool side vertical stiffeners are to be attached to brackets at the upper and lower ends of the stool.

The distance from the edge of the stool top plate to the surface of the corrugation flange is to be not less than 1.5 times the corrugation flange plate thickness. The stool bottom is to be installed in line with double bottom floors and is to have a width not less than 2.5 times the mean depth of the corrugation. The stool is to be fitted with diaphragms in line with the longitudinal double bottom girder for effective support of the corrugated bulkhead. Scallops in the brackets and diaphragms in way of the connections to the stool top plate are to be avoided. Where corrugations are cut at the bottom stool, corrugations and stool side plating are generally to be connected to the stool top plate by full penetrations welds. The plating of the lower stool and supporting floors is generally to be connected to the inner bottom by full penetration welds.

(ii) Upper stool

The upper stool, where fitted, is to have a height generally between 2 and 3 times the depth of corrugations. Rectangular stools are to have a height generally equal to 3 times the depth of corrugations, measured from the deck level and at hatch side girder. The upper stool is to be properly supported by girders or deep brackets between the adjacent hatch-end beams. The width of the stool bottom plate is generally to be the same as that of the lower stool top plate. The stool top of non-rectangular stool bottom plate are to be the same as those of the bulkhead plating below. The thickness of the lower portion of stool side plating is not to be less than 80% of that required plating and the section modulus of the stool side stiffeners is not to be less than those required by on the basis of the load model in 1A.5.2. The ends of stool side stiffeners are to be attached to brackets at upper and lower end of the stool. Diaphragms are to be fitted inside the stool in line with and effectively attached to longitudinal deck girders extending to the hatch end coaming girders for effective support of the corrugated bulkhead. Scallops in the brackets and diaphragms in way of the connection to the stool bottom plate are to be avoided.

(iii) Alignment

At deck, if no stool is fitted, two transverse reinforced beams are to be fitted in line with the corrugation flanges.

At bottom, if no stool is fitted, the corrugation flanges are to be in line with the supporting floors. Corrugations and floors are generally to be connected to the inner bottom plating by full penetration

welds. The thickness and material properties of the supporting floors are to be at least equal to those provided for the corrugation flanges. Moreover, the cut-outs for connections of the inner bottom longitudinals to double bottom floors are to be closed by collar plates. The supporting floors are to be connected to each other by suitably designed shear plates. Stool side plating is to align with the corrugation flanges and stool side vertical stiffeners and their brackets in lower stool are to align with the inner bottom longitudinals to provide appropriate load transmission between these stiffening members. Stool side plating is not to be knuckled anywhere between the inner bottom plating and the stool top.

(b) Bending capacity and shear stress

The bending capacity is to comply with the following relationship:

$$10^3 \cdot \frac{M}{0.5 \cdot Z_{le} \cdot \sigma_{a,le} + Z_m \cdot \sigma_{a,m}} \leq 0.95$$

where:

M	=	Bending moment, kN/m as given in 1A.5.3(a).
Z_{le}	=	Section modulus, in cm³, at the lower end of corrugations, to be calculated according to 1A5.4(c).
Z_m	=	Section modulus, in cm³, at the mid-span of corrugations, to be calculated according to 1A.5.4(d).
$\sigma_{a,le}$	=	Allowable stress, in kN/m², as given in 1A.5.4 (e) for the lower end of the corrugations.
$\sigma_{a,m}$	=	Allowable stress, in kN/m², as given in 1A.5.4 for the mid-span of the corrugations.

In no case Z_m is to be taken greater than the lesser of $1.15Z_{le}$ and $1.15Z'_{le}$ for calculation of the bending capacity, Z'_{le} being defined below.

In case shedders plates are fitted which:

- are not knuckled;
- are welded to the corrugations and the top of the lower stool by one penetration welds or equivalent;
- are fitted with a minimum slope of 45°their lower edge is in line with the stool side plating;
- have thicknesses not less than 75% of that provided by the corrugation flange;
- and material properties at least equal to those provided by the flanges.

or gusset plates are fitted which:

- are in combination with shedder plates having thickness, material properties and welded connections in accordance with the above requirements;
- have a height not less than half of the flange width;
- are fitted in line with the stool side plating;
- are generally welded to the top of the lower stool by full penetration welds and to the corrugations and shedder plates by one side penetration welds or equivalent;
- have thickness and material properties at least equal to those provided for the flanges.

The section modulus Z_{le}, in cm³, is to be taken not larger than the value Z'_{le}, in cm³, given by:

$$Z'_{le} = Z_g + 10^3 \cdot \frac{Q \cdot h_g - 0.5 \cdot h_g^2 \cdot S_1 \cdot P_g}{\sigma_a}$$

where:

Z_g	=	Section modulus, in cm³, of the corrugations calculated according to 1A.5.4(d) in way of the upper end of shedder or gusset plates, as applicable.
Q	=	Shear force, in kN, as given in 1A.5.3(b).
h_g	=	Height, in m, of shedders or gusset plates, as applicable (see Fig. III 1A-8, 9, 10 and 11).
S_1	=	As given in 1A.5.2(c).
P_g	=	Resultant pressure, in kN/m², as defined in 1A.5.2(e), calculated in way of the middle of the shedder or gusset plates, as applicable.
σ_a	=	Allowable stress, in N/mm², as given in 1A.5.4(e).

Stresses τ are obtained by dividing the shear force Q by the shear area. The shear area is to be reduced in order to account for possible non-perpendicularity between the corrugation webs and flanges. In general, the reduced shear area may be obtained by multiplying the web sectional area by (sin φ), φ being the angle between the web and the flange.

When calculating the section modulus and the shear area, the net plate thicknesses are to be used.

The section modulus of corrugations are to be calculated on the basis of the following requirements given in 1A.5.4(c) and 1A.5.4(d).

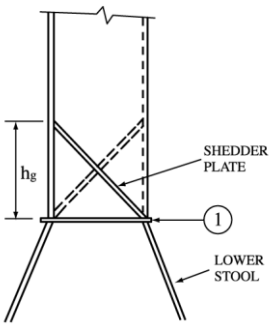

Fig. III 1A-8
Symmetric Shedder Plate

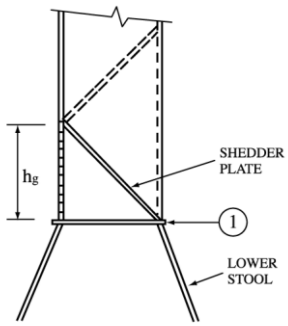

Fig. III 1A-9
Asymmetric Shedder Plates

(c) Section modulus at the lower end of corrugations

The section modulus is to be calculated with the compression flange having an effective flange width, b_{ef}, not larger than as given in 1A.5.4(f). If the corrugation webs are not supported by local brackets below the stool top (or below the inner bottom) in the lower part, the section modulus of the corrugations is to be calculated considering the corrugation webs 30% effective.

(i) Provided that effective shedder plates, as defined in 1A.5.4(b), are fitted (see Fig. III 1A-8, 9), when calculating the section modulus of corrugations at the lower end (cross-section ① in Fig. III 1A-8, 9), the area of flange plates, in cm² may be increased by:

$$\left(2.5 \cdot a \cdot \sqrt{t_f \cdot t_{sh}}\right)$$

(not to be taken greater than $2.5 \cdot a \cdot t_f$)

where:

a = Width, in m, of the corrugation flange (see Fig. III 1A-6).
t_{sh} = Net shedder plate thickness, in mm.
t_f = Net flange thickness, in mm.

(ii) Provided that effective gusset plates, as defined in 1A.5.4(b), are fitted (see Fig. III 1A-10, 11), when calculating the section modulus of corrugations at the lower end (cross-section ① in Fig. III 1A-10, 11), the area of flange plates, in cm², may be increased by ($7 \cdot h_g \cdot t_f$),

where:

h_g = Height of gusset plate, in m, see Fig. III 1A-10,11, not to be taken greater than $\frac{10}{7} \cdot S_{gu}$
S_{gu} = Width of the gusset plates, in m.
t_f = Net flange thickness, in mm, based on the as built condition.

(iii) If the corrugation webs are welded to a sloping stool top plate, which have an angle not less than 45° with the horizontal plane, the section modulus of the corrugations may be calculated considering the corrugation webs fully effective. In case effective gusset plates are fitted, when calculating the section modulus of corrugations the area of flange plates may be increased as specified in (ii) above. No credit can be given to shedder plates only. For angles less than 45°, the effectiveness of the web may be obtained by linear interpolation between 30% for 0° and 100% for 45°.

(d) Section modulus of corrugations at cross-sections other than the lower end

The section modulus is to be calculated with the corrugation webs considered effective and the compression flange having an effective flange width, b_{ef}, not larger than as given in 1A.5.4(f)(i).

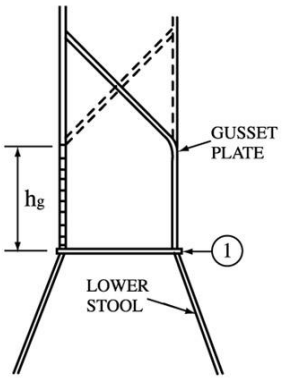

Fig. III 1A-10
Symmetric Gusset/Shedder Plates

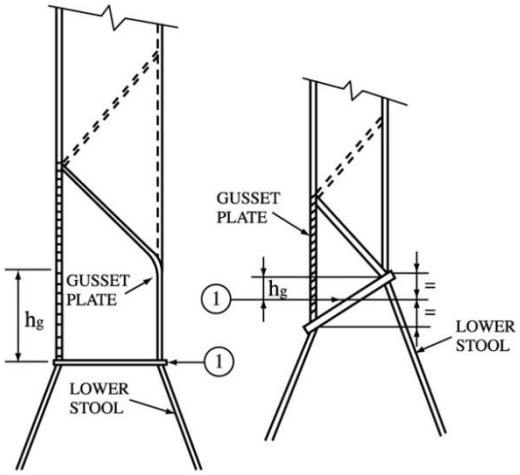

Fig. III 1A-11
Asymmetric Gusset/Shedder Plates

(e) Allowable stress check

The normal and shear stresses σ and τ are not to exceed the allowable values σ_a and τ_a, in N/mm², given by:

σ_a = σ_F

τ_a = $0.5\sigma_F$

σ_F = The minimum upper yield stress, in N/mm², of the material.

(f) Effective compression flange width and shear buckling check

(i) Effective width of the compression flange of corrugations

The effective width b_{ef}, in m, of the corrugation flange is given by:

$$b_{ef} = C_e \cdot a$$

where:

$$C_e = \frac{2.25}{\beta} - \frac{1.25}{\beta^2} \qquad \text{for } \beta > 1.25$$

$$C_e = 1.0 \qquad \text{for } \beta \leq 1.25$$

$$\beta = 10^3 \cdot \frac{a}{t_f} \cdot \sqrt{\frac{\sigma_F}{E}}$$

t_f = Net flange thickness, in mm.

a = Width, in m, of the corrugation flange (see Fig. III 1A-6).

σ_F = Minimum upper yield stress, in N/mm^2, of the material.

E = Modulus of elasticity of the material, in N/mm^2, to be assumed equal to $2.06 \cdot 10^5$ for steel.

(ii) Shear

The buckling check is to be performed for the web plates at the corrugation ends.

The shear stress τ is not to exceed the critical value τ_c, in N/mm^2 obtained by the following:

$$\tau_c = \tau_E \qquad \text{when} \quad \tau_E \le \frac{\tau_F}{2}$$
$$= \tau_F\left(1 - \frac{\tau_F}{4\tau_E}\right) \quad \text{when} \quad \tau_E > \frac{\tau_F}{2}$$

where:

$$\tau_F = \frac{\sigma_F}{\sqrt{3}}$$

σ_F = Minimum upper yield stress, in N/mm², of the material.

$$\tau_E = 0.9k_tE\left(\frac{t}{1000c}\right)^2 \qquad \text{N/mm}^2$$

k_t , E, t and c are given by :

k_t = 6.34

E = Modulus of elasticity of material as given in (i) above.

t = Net thickness, in mm, of corrugation web.

c = Width, in m, of corrugation web (see Fig. III 1A-6).

(g) Local net plate thickness

The bulkhead local net plate thickness t, in mm, is given by:

$$t = 14.9 \cdot S_w\sqrt{\frac{1.05 \cdot P}{\sigma_F}}$$

where:

S_w = Plate width, in m, to be taken equal to the width of the corrugation flange or web, whichever is the greater (See S in Fig. III 1A-6).

P = Resultant pressure, in kN/m², as defined in 1A.5.2(e), at the bottom of each strake of plating; in all cases, the net thickness of the lowest strake is to be determined using the resultant pressure at the top of the lower stool, or at the inner bottom, if no lower stool is fitted or at the top of shedders, if shedder or gusset/shedder plates are fitted.

σ_F = Minimum upper yield stress, in N/mm², of the material.

For built-up corrugation bulkheads, when the thicknesses of the flange and web are different, the net thickness of the narrower plating is to be not less than t_n, in mm, given by:

$$t_n = 14.9 \cdot S_n\sqrt{\frac{1.05 \cdot P}{\sigma_F}}$$

S_n = The width, in m, of the narrower plating.

The net thickness of the wider plating, in mm, is not to be taken less than the maximum of the following:

$$t_w = 14.9 \cdot S_w\sqrt{\frac{1.05 \cdot P}{\sigma_F}} \text{ and}$$

$$t_w = \sqrt{\frac{440 \cdot S_w^2 \cdot 1.05 \cdot P}{\sigma_F} - t_{np}^2}$$

where:

$t_{np} \leq$ actual net thickness of narrower plating and not to be greater than:

$$14.9 \cdot S_w \sqrt{\frac{1.05 \cdot P}{\sigma_F}}$$

1A.5.5 Local details

The design of local details is to maintain the continuity of structural members for the purpose of transferring the corrugated bulkhead forces and moments to the boundary structures, in particular to the double bottom and cross-deck structures. In particular, the thickness and stiffening of effective gusset and shedder plates, as defined in 1A.5.4(c), is to comply with Chapter 14 of Part II on the basis of the load model in 1A.5.2. Unless otherwise stated, weld connections and materials are to be dimensioned and selected in accordance with Chapter 14 of Part II.

1A.5.6 Corrosion addition and steel renewal

The corrosion addition t_s is to be taken equal to 3.5 mm.

Steel renewal is required where the gauged thickness is less than t_{net} + 0.5 mm.

Where the gauged thickness is within the range t_{net} + 0.5 mm and t_{net} + 1.0 mm, coating (applied in accordance with the coating manufacturer's requirements) or annual gauging may be adopted as an alternative to steel renewal.

1A.6 Evaluation of Allowable Hold Loading Considering Hold Flooding

1A.6.1 Application and definitions

These requirements apply to single side skin bulk carriers of 150 m in length and above, intending to carry cargoes having bulk density 1.0 t/m^3, or above. The loading in each hold is not to exceed the allowable hold loading in flooded condition, calculated as per 1A.6.4, using the loads given in 1A.6.2 and the shear capacity of the double bottom given in 1A.6.3. In no case is the allowable hold loading, considering flooding, to be taken greater than the design hold loading in intact condition.

1A.6.2 Loading model

(a) General

The loads to be considered as acting on the double bottom are those given by the external sea pressures and the combination of the cargo loads with those induced by the flooding of the hold which the double bottom belongs to.

The most severe combinations of cargo induced loads and flooding loads are to be used, depending on the loading conditions included in the loading manual:

- homogeneous loading conditions;
- non-homogenous loading conditions;
- packed cargo conditions (such as steel mill products).

For each loading conditions, the maximum bulk cargo density to be carried is to be considered in calculating the allowable hold loading limit.

(b) Inner bottom flooding head

The flooding head h_f (see Fig. III 1A-5) is the distance, in m, measured vertically with the ship in the upright position, from the inner bottom to a level located at a distance d_f, in m, from the baseline equal to:

(i) in general:

(1) D for the foremost hold,

(2) 0.9D for the other holds.

(ii) for ships less than 50,000 tons deadweight with Type B freeboard:

(1) 0.95D for the foremost hold,

(2) 0.85D for the other holds.

D is the distance, in m, from the baseline to the freeboard deck at side amidships (see Fig. III 1A-5).

1A.6.3 Shear capacity of the double bottom

The shear capacity C of the double bottom is defined as the sum of the shear strength at each end of

- all floors adjacent to both hoppers, less one half of the strength of the two floors adjacent to each stool, or transverse bulkhead if no stool is fitted (see Fig. III 1A-12).

- all double bottom girders adjacent to both stools, or transverse bulkheads if no stool is fitted.

Where in the end holds, girders of floors run out and are not directly attached to the boundary stool or hopper girder, their strength is to be evaluated for the one end only.

Note that the floors and girders to be considered are those inside the hold boundaries formed by the hoppers and stools (or transverse bulkheads if no stool is fitted). The hopper side girders and the floors directly below the connection of the bulkhead stools (or transverse bulkheads if no stool is fitted) to the inner bottom are not to be included.

The hopper side girders and the floors directly below the connection of the bulkhead stools (or transverse bulkheads if no stool is fitted) to the inner bottom are not to be included.

When the geometry and/or the structural arrangement of the double bottom are such to make the above assumptions inadequate, the shear capacity C of double bottom may be specially considered by the Society.

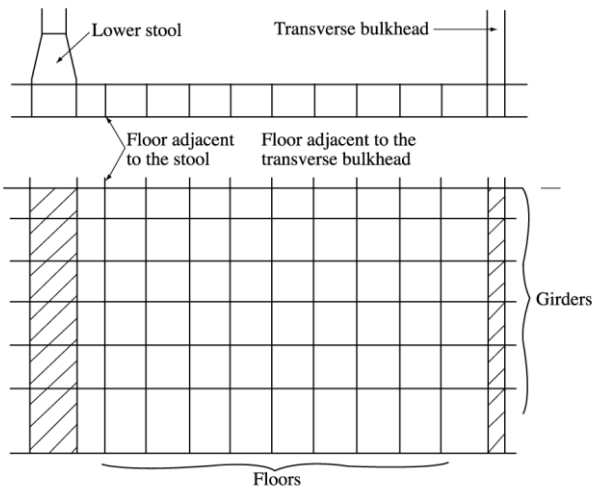

Fig. III 1A-12
Arrangement of Double Bottom

In calculating the shear strength, the net thickness of floors and girders is to be used. The net thickness t_{net}, in mm, is given by:

$t_{net} = t - 2.5$

where:

t = Thickness, in mm, of floors and girders.

(a) Floor shear strength

The floor shear strength in way of the floor panel adjacent to hoppers S_{f1}, in kN, and the floor shear strength in way of the openings in the outmost bay (i.e. that bay which is closer to hopper) S_{f2}, in kN, are given by the following expressions:

$$S_{f1} = 10^{-3} \cdot A_f \cdot \frac{\tau_a}{\eta_1}$$
$$S_{f2} = 10^{-3} \cdot A_{f,h} \cdot \frac{\tau_a}{\eta_2}$$

where:

A_f = Sectional area, in mm^2, of the floor panel adjacent to hoppers.

$A_{f,h}$ = Net sectional area, in mm^2, of the floor panels in way of the openings in the outmost bay (i.e. that bay which is closer to hopper)

τ_a = Allowable shear stress, in N/mm^2, to be taken equal to lesser of $\tau_a = \frac{162 \cdot \sigma_F^{0.6}}{\left(\frac{S}{t_{net}}\right)^{0.8}}$ and $\frac{\sigma_F}{\sqrt{3}}$

For floors adjacent to the stools or transverse bulkheads, as identified in 1A.6.3 above, τ_a may be taken $\frac{\sigma_F}{\sqrt{3}}$.

σ_F = Minimum upper yield stress, in N/mm^2, of the material.

S = Spacing of stiffening members, in mm, of panel under consideration.

η_1 = 1.10

η_2 = 1.20

η_2 may be reduced, down to 1.10 where appropriate reinforcement, the fitted around openings.

(b) Girder shear strength

The girder shear strength in way of the girder panel adjacent to stools (or transverse bulkheads, if no stool is fitted) S_{gl}, in kN, and the girder shear strength in way of the largest opening in the outmost bay (i.e. that bay which is closer to stool, or transverse bulkhead, if no stool is fitted) S_{g2}, in kN, are given by:

$$S_{g1} = 10^{-3} \cdot A_g \cdot \frac{\tau_a}{\eta_1}$$
$$S_{g2} = 10^{-3} \cdot A_{g,h} \cdot \frac{\tau_a}{\eta_2}$$

where:

A_g = Minimum sectional area, in mm^2, of the girder panel adjacent to stools (or transverse bulkheads, if no stool is fitted).

$A_{g,h}$ = Net sectional area, in mm^2, of the girder panel in way of the largest opening in the outmost bay (i.e. that bay which is closer to stool, or transverse bulkhead, if no stool is fitted).

τ_a = Allowable shear stress, in N/mm^2, as given in (a)above.

η_1 = 1.10

η_2 = 1.15

η_2 may be reduced, down to 1.10 where appropriate reinforcements are fitted around openings.

1A.6.4 Allowable hold loading

The allowable seize loading W, in tons, is given by:

$$W = \rho_c \cdot V \cdot \frac{1}{F}$$

where:

F = 1.1 in general,

= 1.05 for steel mill products,

ρ_c = Bulk cargo density, in t/m^3,

V = Volume, in m^3, occupied by cargo at a level h_1,

$$h_1 = \frac{X}{\rho_c g}$$

X = The lesser of X_1 and X_2 given by :

$$X_1 = \frac{Z + \rho \cdot g \cdot (E - h_f)}{1 + \frac{\rho}{\rho_c}(perm - 1)}$$

$$X_2 = Z + \rho \cdot g \cdot (E - h_f \cdot perm)$$

ρ = Sea water density, in t/m^3.

g = 9.81 m/s^2, gravity acceleration.

E = $d_f - 0.1D$, ship immersion in m for flooded hold condition,

d_f, D = As given in 1A.6.2(b).

h_f = Flooding head, in m, as defined in 1A.6.2(b).

perm = Cargo permeability, (i.e. the ratio between the voids within the cargo mass and the volume occupied by the cargo); it needs not be taken greater than 0.3 and is to be taken equal to zero for steel mill products.

Z = The lesser of Z_1 and Z_2 given by:

$$Z_1 = \frac{C_h}{A_{DB,h}}$$

$$Z_2 = \frac{C_e}{A_{DB,e}}$$

C_h = Shear capacity of the double bottom, in kN, as defined in 1A.6.3, considering, for each floor, the lesser of the shear strengths S_{f1} and S_{f2} (see 1A.6.3(a)) and , for each girder, the lesser of the shear strengths S_{g1} and S_{g2} (see 1A 6.3(b)).

C_e = Shear capacity of the double bottom, in kN, as defined in 1A.6.3, considering, for each floor, the shear strength S_{f1} (see 1A.6.3(a)) and, for each girder, the lesser of the shear strengths S_{g1} and S_{g2} (see 1A.6.3(b)).

$$A_{DB,h} = \sum_{i=1}^{i=n} S_i \cdot B_{DB,i}$$

$$A_{DB,e} = \sum_{i=1}^{i=n} S_i \cdot (B_{DB} - S_1)$$

n = Number of floors between stools (or transverse bulkheads, if no stool is fitted).

S_i = Space of ith-floor, in m.

$B_{DB,i}$ = $B_{DB} - S_1$ for floors whose shear strength is given by S_{f1} (see 1A.6.3(a)).

$B_{DB,i}$ = $B_{DB,h}$ for floors whose shear strength is given by S_{f2} (see 1A.6.3(a)).

B_{DB} = Breadth of double bottom, in m, between hoppers (see Fig. III 1A-13).

$B_{DB,h}$ = Distance, in m, between the two considered opening (see Fig. III 1A-13).

S_1 = Spacing, in m, of double bottom longitudinals adjacent to hoppers.

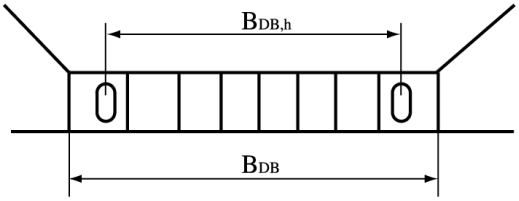

Fig. III 1A-13
Dimensions of Double Bottom

1A.7 Hatch Covers and Hatch Coamings of Cargo Holds

1A.7.1 Application and definitions

(a) These requirements apply to all bulk carriers, ore carriers and combination carriers, and are for all cargo hatch covers and hatch forward and side coamings on exposed decks in position 1, as defined in 17.1.2 of Part II. The requirements of 1A.7 apply to ships contracted for construction on or after 1 January 2004.

(b) The strength requirements are applicable to hatch covers and hatch coamings of stiffened plate construction. The secondary stiffeners and primary supporting members of the hatch covers are to be continuous over the breadth and length of the hatch covers, as far as practical. When this is impractical, sniped end connections are not to be used and appropriate arrangements are to be adopted to provide sufficient load carrying capacity.

(c) The spacing of primary supporting members parallel to the direction of secondary stiffeners is not to exceed 1/3 of the span of primary supporting members.

(d) The secondary stiffeners of the hatch coamings are to be continuous over the breadth and length of the hatch coamings.

(e) The net minimum scantlings of hatch covers are to fulfill the strength criteria given in:
   (i) 1A.7.3(c), for plating.
   (ii) 1A.7.3(d), for secondary stiffeners.
   (iii) 1A.7.3(e), for primary supporting members, the critical buckling stress, check in 1A.7.3(f) and the rigidity criteria given in 1A.7.3(g), adopting the load model given in 1A.7.2.

(f) The net minimum scantlings of hatch coamings are to fulfill the strength criteria given in:
   (i) 1A.7.4(b), for plating.
   (ii) 1A.7.4(c), for secondary stiffeners.
   (iii) 1A.7.4(d), for coaming stays, adopting the load model given in 1A.7.4(a).

(g) The net thicknesses, t_{net}, are the member thicknesses necessary to obtain the minimum net scantlings required by 1A.7.3 and 1A.7.4.

(h) The required gross thicknesses are obtained by adding the corrosion additions, t_s, given in 1A.7.6, to t_{net}. Material for the hatch covers and coamings is to be steel according to the requirements for ship's hull.

1A.7.2 Hatch cover load model

The pressure p, in kN/m^2, on the hatch covers panels is given by:

(a) For ships of 100 m in length and above and for hatch ways located at the freeboard deck:

$$p = 34.3 + \frac{P_{FP} - 34.3}{0.25} \cdot \left(0.25 - \frac{X}{L_f}\right) \geq 34.3$$

where:

P_{FP}	=	$49.1 + (L_f - 100)a$, pressure at the forward perpendicular,
a	=	0.0726 for type B freeboard ships,
	=	0.356 for ships with reduced freeboard.
L_f	=	Freeboard length, in m, as defined in 1.2.10, Part II of the Rules to be taken not greater than 340 m.
X	=	Distance, in m, of the mid length of the hatch cover under examination from the forward end of L_f.

Where a position 1 hatchway is located at least one superstructure standard height higher than the freeboard deck, the pressure p may be 34.3 kN/m^2.

For ships less than 100 m in length and for hatch ways located at the freeboard deck:

$$p = 15.8 + \frac{L_f}{3} \cdot \left(1 - \frac{5}{3} \cdot \frac{X}{L_f}\right) - 3.6 \cdot \frac{X}{L_f} \geq 0.195L_f + 14.9$$

Where two or more panels are connected by hinges, each individual panel is to be considered separately.

1A.7.3 Hatch cover strength criteria

(a) Allowable stress checks

The normal and shear stresses σ and τ in the hatch cover structures are not to exceed the allowable values, σ_a and τ_a, in N/mm^2, given by:

$\sigma_a = 0.8\ \sigma_F$
$\tau_a = 0.46\ \sigma_F$

where:

σ_F being the minimum upper yield stress, in N/mm^2, of the material.

The normal stress in compression of the attached flange of primary supporting members is not to exceed 0.8 times the critical buckling stress of the structure according to the buckling check as given in 1A.7.3(f). The stresses in hatch covers that are designed as a grillage of longitudinal and transverse primary supporting members are to be determined by a grillage or a FE analysis. When a beam or a grillage analysis is used, the secondary stiffeners are not to be included in the attached flange area of the primary members. When calculating the stresses σ and τ, the net scantlings are to be used.

(b) Effective cross-sectional area of panel flanges for primary supporting members

The effective flange area A_f, in cm^2, of the attached plating, to be considered for the yielding and buckling checks of primary supporting members, when calculated by means of a beam or grillage model, is obtained as the sum of the effective flange areas of each side of the girder web as appropriate:

$$A_f = \sum_{nf} (10b_{ef}t)$$

where:

nf = 2 if attached plate flange extends on both sides of girder web,
a = 1 if attached plate flange extends on one side of girder web only.
t = Net thickness of considered attached plate, in mm.
b_{ef} = Effective breadth, in m, of attached plate flange on each side of girder web,
= b_p , but not to be taken greater than 0.165l,
b_p = Half distance, in m, between the considered primary supporting member and the adjacent one.
l = Span, in m, of primary supporting members.

(c) Local net plate thickness

The local net plate thickness t, in mm, of the hatch cover top plating is not to be less than:

$$t = F_p 15.8s\sqrt{\frac{p}{0.95\sigma_F}}$$

but to be not less than 1% of the spacing of the stiffener or 6 mm if that be greater.

where:

F_p = Factor for combined membrane and bending response,
= 1.50 in general,
= 1.90 σ/σ_a, for $\sigma/\sigma_a \geq 0.8$, for the attached plate flange of primary supporting members,
s = Stiffener spacing, in m.
p = Pressure, in kN/m^2 , as defined in 1A.7.2.
σ = As defined in 1A.7.3(e).
σ_a = As defined in 1A.7.3(a).

(d) Net scantlings of secondary stiffeners

The required minimum section modulus, Z, in cm^3, of secondary stiffeners of the hatch cover top plate, based on stiffener net member thickness, are given by:

$$Z = \frac{1000l^2 sp}{12\sigma_a}$$

where:

l = Secondary stiffener span, in m, to be taken as the spacing, in m, of primary supporting members or the distance between a primary supporting member and the edge support, as applicable. When brackets are fitted at both ends of all secondary stiffener spans, the secondary stiffener span may be reduced by an amount equal to 2/3 of the minimum brackets arm length, but not greater than 10% of the gross span, for each bracket.
s = Secondary stiffener spacing, in m.
p = Pressure, in kN/m^2 , as defined in 1A.7.2.
σ_a = As defined in 1A.7.3(a).

The net section modulus of the secondary stiffeners is to be determined based on an attached plate width assumed equal to the stiffener spacing.

(e) Net scantlings of primary supporting members

The section modulus and web thickness of primary supporting members, based on member net thickness, are to be such that the normal stress σ in both flanges and the shear stress τ, in the web, do not exceed the allowable values σ_a and τ_a, respectively, defined in 1A.7.3(a).

The breadth of the primary supporting member flange is to be not less than 40% of their depth for laterally unsupported spans greater than 3.0 m. Tripping brackets attached to the flange may be considered as a lateral support for primary supporting members.

The flange outstand is not to exceed 15 times the flange thickness.

(f) Critical buckling stress check

(i) Hatch cover plating

The compressive stress σ in the hatch cover plate panels, induced by the bending of primary supporting members parallel to the direction of secondary stiffeners, is not to exceed 0.8 times the critical buckling stress σ_{C1}, to be evaluated as defined below:

$\sigma_{C1} = \sigma_{E1}$ when $\sigma_{E1} \leq \sigma_F /2$
$= \sigma_F [1 - \sigma_F/(4\sigma_{E1})]$ when $\sigma_{E1} > \sigma_F /2$

where:

σ_F = Minimum upper yield stress, in N/mm^2, of the material.
σ_{E1} = $3.6E\left(\frac{t}{1000s}\right)^2$
E = Modulus of elasticity, in N/mm^2,
= $2.06 \cdot 10^5$ for steel.
t = Net thickness, in mm, of plate panel.
s = Spacing, in m, of secondary stiffeners.

The mean compressive stress σ in each of the hatch cover plate panels, induced by the bending of primary supporting members perpendicular to the direction of secondary stiffeners, is not to exceed 0.8 times the critical buckling stress σ_{C2}, to be evaluated as defined below:

$\sigma_{C2} = \sigma_{E2}$ when $\sigma_{E2} \leq \sigma_F /2$
$= \sigma_F [1 - \sigma_F/(4\sigma_{E2})]$ when $\sigma_{E2} > \sigma_F /2$

where:

σ_F = Minimum upper yield stress, in N/mm^2, of the material.
σ_{E2} = $0.9mE\left(\frac{t}{1000s_s}\right)^2$
m = $c\left[1+\left(\frac{s_s}{l_s}\right)^2\right]^2 \frac{2.1}{\Psi + 1.1}$
E = Modulus of elasticity, in N/mm^2.
= $2.06 \cdot 10^5$ for steel.
t = Net thickness, in mm, of plate panel.
s_s = Length, in m, of the shorter side of the plate panel.
l_s = Length, in m, of the longer side of the plate panel.
Ψ = Ratio between smallest and largest compressive stress.
c = 1.3 when plating is stiffened by primary supporting members,
= 1.21 when plating is stiffened by secondary stiffeners of angle or T type,
= 1.1 when plating is stiffened by secondary stiffeners of bulb type,
= 1.05 when plating is stiffened by flat bar.

The biaxial compressive stress in the hatch cover panels, when calculated by means of FEM shell element model, is to be determined at the discretion of the Society as deemed equivalent to the above criteria.

(ii) Hatch cover secondary stiffeners

The compressive stress σ in the top flange of secondary stiffeners, induced by the bending of primary supporting members parallel to the direction of secondary stiffeners, is not to exceed 0.8 times the critical buckling stress σ_{CS}, to be evaluated as defined below:

$\sigma_{CS} = \sigma_{ES}$ when $\sigma_{ES} \leq \sigma_F /2$
$= \sigma_F [1 - \sigma_F/(4\sigma_{ES})]$ when $\sigma_{ES} > \sigma_F /2$

where:

σ_F = Minimum upper yield stress, in N/mm^2, of the material.

σ_{ES} = Ideal elastic buckling stress, in N/mm^2, of the secondary stiffener,

= Minimum between σ_{E3} and σ_{E4}.

σ_{E3} = $\dfrac{0.001EI_a}{Al^2}$

E = Modulus of elasticity, in N/mm^2,

= $2.06 \cdot 10^5$ for steel.

I_a = Moment of inertia, in cm^4, of the secondary stiffener, including a top flange equal to the spacing of secondary stiffeners.

A = Cross-sectional area, in cm^2, of the secondary stiffener, including a top flange equal to the spacing of secondary stiffeners.

l = Span, in m, of the secondary stiffener.

σ_{E4} = $\dfrac{\pi^2 EI_w}{10^4 I_p l^2}\left(m^2 + \dfrac{K}{m^2}\right) + 0.385E\dfrac{I_t}{I_p}$

$K = \dfrac{Cl^4}{\pi^4 EI_w}10^6$

m = Number of half waves, given by the following table:

	$0 < K \le 4$	$4 < K \le 36$	$36 < K \le 144$	$(m-1)^2m^2 < K \le m^2(m+1)^2$
m	1	2	3	m

I_w = Sectorial moment of inertia, in cm^6, of the secondary stiffener about its connection with the plating,

= $\dfrac{h_w^3 t_w^3}{36}10^{-6}$ for flat bar secondary stiffeners,

= $\dfrac{t_f b_f^3 h_w^2}{12}10^{-6}$ for "Tee" secondary stiffeners,

= $\dfrac{b_f^3 h_w^3}{12(b_f + h_w)}\left[t_f\left(b_f^2 + 2b_f h_w + 4h_w^2\right) + 3t_w b_f h_w\right] \cdot 10^{-6}$ for angles and bulb secondary stiffener.

I_p = Polar moment of inertia, in cm^4, of the secondary stiffener about its connection with the plating,

= $\dfrac{h_w^3 t_w}{3}10^{-4}$ for flat bar secondary stiffeners,

= $\left(\dfrac{h_w^3 t_w}{3} + h_w^2 b_f t_f\right)10^{-4}$ for flanged secondary stiffeners.

I_t = St. Venant's moment of inertia, in cm^4, of the secondary stiffener without top flange,

= $\dfrac{h_w t_w^3}{3}10^{-4}$ for flat bar secondary stiffeners,

= $\dfrac{1}{3}\left[h_w t_w^3 + b_f t_f^3\left(1 - 0.63\dfrac{t_f}{b_f}\right)\right]10^{-4}$ for flanged secondary stiffeners.

h_w, t_w = Height and net thickness, in mm, of the secondary stiffener, respectively.

b_f, t_f = Width and net thickness, in mm, of the secondary stiffener bottom flange, respectively.

C = Spring stiffness exerted by the hatch cover top plating,

= $\dfrac{k_p E t_p^3}{3s\left(1 + \dfrac{1.33k_p h_w t_p^3}{1000st_w^3}\right)}10^{-3}$

s = Spacing, in m, of secondary stiffeners.

k_p = $1-\eta_p$ to be taken not less than zero; for flanged secondary stiffeners, k_p need not be taken less than 0.1.

η_p = σ/σ_{E1}

σ = As defined in 1A.7.3(e).

σ_{E1} = As defined in 1A.7.3(f)(i).

t_p = Net thickness, in mm, of the hatch cover plate panel.

For flat bar secondary stiffeners and buckling stiffeners, the ratio h/t_W is to be not greater than $15 \cdot K^{0.5}$, where:

h, t_W = Height and net thickness of the stiffener, respectively.
K = $235/\sigma_F$
σ_F = Minimum upper yield stress, in N/mm^2, of the material.

(iii) Web panels of hatch cover primary supporting members

This check is to be carried out for the web panels of primary supporting members, formed by web stiffeners or by the crossing with other primary supporting members, the face plate (or the bottom cover plate) or the attached top cover plate. The shear stress τ in the hatch cover primary supporting members web panels is not to exceed 0.8 times the critical buckling stress τ_C, to be evaluated as defined below:

$\tau_C = \tau_E$ when $\tau_E \leq \tau_F/2$
$= \tau_F[1 - \tau_F / (4\tau_E)]$ when $\tau_E > \tau_F/2$

where:

σ_F = Minimum upper yield stress, in N/mm^2, of the material.
τ_F = $\frac{\sigma_F}{\sqrt{3}}$
τ_E = $0.9k_t E\left(\frac{t_{pr,n}}{1000d}\right)^2$
E = Modulus of elasticity, in N/mm^2.
= $2.06 \cdot 10^5$ for steel.
$t_{pr,n}$ = Net thickness, in mm, of primary supporting member.
k_t = $5.35 + 4.0/(a/d)^2$
a = Greater dimension, in m, of web panel of primary supporting member.
d = Smaller dimension, in m, of web panel of primary supporting member.

For primary supporting members parallel to the direction of secondary stiffeners, the actual dimensions of the panels are to be considered. For primary supporting members perpendicular to the direction of secondary stiffeners or for hatch covers built without secondary stiffeners, a presumed square panel of dimension d is to be taken for the determination of the stress τ_C. In such a case, the average shear stress τ between the values calculated at the ends of this panel is to be considered.

(g) Deflection limit and connections between hatch cover panels

Load bearing connections between the hatch cover panels are to be fitted with the purpose of restricting the relative vertical displacements. The vertical deflection of primary supporting members is to be not more than 0.0056 *l*, where *l* is the greatest span of primary supporting members.

1A.7.4 Hatch coamings and local details

(a) Load model

The pressure p_{coam}, in kN/m^2, on the No. 1 forward transverse hatch coaming is given by:

p_{coam} = 220, when a forecastle is fitted in accordance with 1.8 of this Part,
= 290, in the other cases.

The pressure p_{coam}, in kN/m^2, on the other coamings is given by:

p_{coam} = 220

(b) Local net plate thickness

The local net plate thickness t, in mm, of the hatch coaming plating is given by:

$$t = 14.9s\sqrt{\frac{p_{coam}}{\sigma_{a,coam}} S_{coam}}$$

where:

s	=	Secondary stiffener spacing, in m.
p_{coam}	=	Pressure, in kN/m^2, as defined in 1A.7.4(a).
S_{coam}	=	Safety factor to be taken equal to 1.15.
$\sigma_{a,coam}$	=	$0.95\sigma_F$

The local net plate thickness is to be not less than 9.5 mm.

(c) Net scantlings of longitudinal and transverse secondary stiffeners

The required section modulus Z, in cm^3, of the longitudinal or transverse secondary stiffeners of the hatch coamings, based on net member thickness, is given by:

$$Z = \frac{1000 S_{coam} l^2 s p_{coam}}{m c_p \sigma_{a,coam}}$$

where:

m	=	16	in general,
	=	12	for the end spans of stiffeners sniped at the coaming corners.
S_{coam}	=	Safety factor to be taken equal to 1.15.	
l	=	Span, in m, of secondary stiffeners.	
s	=	Spacing, in m, of secondary stiffeners.	
p_{coam}	=	Pressure in kN/m^2 as defined in 1A.7.4(a).	
c_p	=	Ratio of the plastic section modulus to the elastic section modulus of the secondary stiffeners with an attached plate breadth, in mm, equal to 40 t, where t is the plate net thickness,	
	=	1.16 in the absence of more precise evaluation.	
$\sigma_{a,coam}$	=	$0.95\sigma_F$	

(d) Net scantlings of coaming stays

The required minimum section modulus, Z, in cm^3, and web thickness, t_w, in mm of coamings stays designed as beams with flange connected to the deck or sniped and fitted with a bracket (see Fig. III 1A-14 and 15) at their connection with the deck, based on member net thickness, are given by:

$$Z = \frac{1000 H_c^2 s p_{coam}}{2\sigma_{a,coam}}$$

$$t_w = \frac{1000 H_c s p_{coam}}{h \tau_{a,coam}}$$

where:

H_c	=	Stay height, in m.
s	=	Stay spacing, in m.
h	=	Stay depth, in mm, at the connection with the deck.
p_{coam}	=	Pressure, in kN/m^2, as defined in 1A.7.4(a).
$\sigma_{a,coam}$	=	$0.95\sigma_F$
$\tau_{a,coam}$	=	$0.5\ \sigma_F$

For calculating the section modulus of coaming stays, their face plate area is to be taken into account only when it is welded with full penetration welds to the deck plating and adequate underdeck structure is fitted to support the stresses transmitted by it. For other designs of coaming stays, such as, for examples, those shown in Fig. III 1A-16 and 17, the stress levels in 1A.7.3(a) apply and are to be checked at the highest stressed locations.

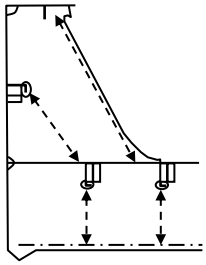

Fig. III 1A-14

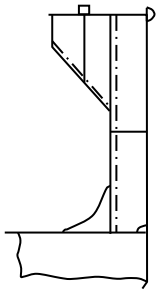

Fig. III 1A-15

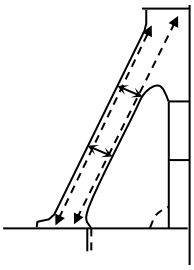

Fig. III 1A-16

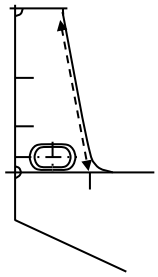

Fig. III 1A-17

(e) Local details

The design of local details is to comply with the Society requirement for the purpose of transferring the pressures on the hatch covers to the hatch coamings and, through them, to the deck structures below. Hatch coamings and supporting structures are to be adequately stiffened to accommodate the loading from hatch covers, in longitudinal, transverse and vertical directions.

Underdeck structures are to be checked against the load transmitted by the stays, adopting the same allowable stresses specified in 1A.7.4(d).

Unless otherwise stated, weld connections and materials are to be dimensioned and selected in accordance with the Society requirements.

Double continuous welding is to be adopted for the connections of stay webs with deck plating and the weld throat is to be not less than 0.44 t_W, where t_W is the gross thickness of the stay web.

Toes of stay webs are to be connected to the deck plating with deep penetration double bevel welds extending over a distance not less than 15% of the stay width.

1A.7.5 Closing arrangements

(a) Securing devices

The strength of securing devices is to comply with the following requirements:

Panel hatch covers are to be secured by appropriate devices (bolts, wedges or similar) suitably spaced alongside the coamings and between cover elements.

Arrangement and spacing are to be determined with due attention to the effectiveness for weather-tightness, depending upon the type and the size of the hatch cover, as well as on the stiffness of the cover edges between the securing devices.

The net sectional area of each securing device is not to be less than:

$A = 1.4\ a/f$ $\quad cm^2$

where:

a = Spacing in m of securing devices, not being taken less than 2 m.
f = $(\sigma_Y / 235)^e$
σ_Y = Specified minimum upper yield stress in N/mm^2 of the steel used for fabrication, not to be taken greater than 70% of the ultimate tensile strength.
e = 0.75 for $\sigma_Y > 235$
= 1.0 for $\sigma_Y \leq 235$

Rods or bolts are to have a net diameter not less than 19 mm for hatchways exceeding 5 m^2 in area.

Between cover and coaming and at cross-joints, a packing line pressure sufficient to obtain weathertightness is to be maintained by the securing devices.

For packing line pressures exceeding 5 N/mm^2, the cross section area is to be increased in direct proportion. The packing line pressure is to be specified.

The cover edge stiffness is to be sufficient to maintain adequate sealing pressure between securing devices. The moment of inertia, I, of edge elements is not to be less than:

$I = 6\ pa^4$ cm^4

where:
p = Packing line pressure in N/mm, minimum 5 N/mm.
a = Spacing in m of securing devices.

Securing devices are to be of reliable construction and securely attached to the hatchway coamings, decks or covers. Individual securing devices on each cover are to have approximately the same stiffness characteristics.

Where rod cleats are fitted, resilient washers or cushions are to be incorporated.

Where hydraulic cleating is adopted, a positive means is to be provided to ensure that it remains mechanically locked in the closed position in the event of failure of the hydraulic system.

(b) Stoppers

Hatch covers are to be effectively secured, by means of stoppers, against the transverse forces arising from a pressure of 175 kN/m^2.

With the exclusion of No.1 hatch cover, hatch covers are to be effectively secured, by means of stoppers, against the longitudinal forces acting on the forward end arising from a pressure of 175 kN/m^2.

No. 1 hatch cover is to be effectively secured, by means of stoppers, against the longitudinal forces acting on the forward end arising from a pressure of 230 kN/m^2.

This pressure may be reduced to 175 kN/m^2 when a forecastle is fitted in accordance with 1A.8 of this Part.

The equivalent stress:

(i) in stoppers and their supporting structures, and

(ii) calculated in the throat of the stopper welds is not to exceed the allowable value of $0.8\sigma_Y$.

(c) Materials and welding

Stoppers or securing devices are to be manufactured of materials, including welding electrodes, meeting the relevant requirements of the Rules.

1A.7.6 Corrosion addition and steel renewal

(a) Hatch covers

For all the structure (plating and secondary stiffeners) of single skin hatch covers, the corrosion addition t_s is to be 2.0 mm.

For pontoon hatch covers, the corrosion addition is to be:

(i) 2.0 mm for the top and bottom plating,

(ii) 1.5 mm for the internal structures.

For single skin hatch covers and for the plating of pontoon hatch covers, steel renewal is required where the gauged thickness is less than t_{net} + 0.5 mm. Where the gauged thickness is within the range t_{net} + 0.5 mm and t_{net} + 1.0 mm, coating (applied in accordance with the coating manufacturer's requirements) or annual gauging may be adopted as an alternative to steel renewal. Coating is to be maintained in GOOD condition, as defined in 2.1.2(l) of Part I of the Rules.

For the internal structure of pontoon hatch covers, thickness gauging is required when plating renewal is to be carried out or when this is deemed necessary, at the discretion of the Surveyor, on the basis of the plating corrosion or deformation condition. In these cases, steel renewal for the internal structures is required where the gauged thickness is less than t_{net}.

(b) Hatch coamings

For the structure of hatch coamings and coaming stays, the corrosion addition t_S is to be 1.5 mm.

Steel renewal is required where the gauged thickness is less than t_{net} + 0.5 mm. Where the gauged thickness is within the range t_{net} + 0.5 mm and t_{net} + 1.0 mm, coating (applied in accordance with the coating manufacturer's requirements) or annual gauging may be adopted as an alternative to steel renewal. Coating is to be maintained in GOOD condition, as defined in 2.1.2(l) of Part I of the Rules.

1A.8 Cargo Hatch Cover Securing Arrangements for Bulk Carriers not Built in Accordance with 1A.7

1A.8.1 Application and implementation

(a) These requirements apply to all bulk carriers, which were not built in accordance with 1A.7 and are for steel hatch cover securing devices and stoppers for cargo hold hatchways No.1 and No.2 which are wholly or partially within 0.25L of the fore perpendicular, except pontoon type hatch cover.

(b) All bulk carriers not built in accordance with 1A.7 are to comply with the requirements of 1A.8 in accordance with the following schedule:

(i) For ships which will be 15 years of age or more on 1 January 2004 by the due date of the first intermediate or special survey after that date;

(ii) For ships which will be 10 years of age or more on 1 January 2004 by the due date of the first special survey after that date;

(iii) For ships which will be less than 10 years of age on 1 January 2004 by the date on which the ship reaches 10 years of age.

(c) Completion prior to 1 January 2004 of an intermediate or special survey with a due date after 1 January 2004 cannot be used to postpone compliance. However, completion prior to 1 January 2004 of an intermediate survey the window for which straddles 1 January 2004 can be accepted.

1A.8.2 Securing devices

(a) The strength of securing devices is to comply with the following requirements:

(i) Panel hatch covers are to be secured by appropriate devices (bolts, wedges or similar) suitably spaced alongside the coamings and between cover elements.

Arrangement and spacing are to be determined with due attention to the effectiveness for weather-tightness, depending upon the type and the size of the hatch cover, as well as on the stiffness of the cover edges between the securing devices.

(ii) The net sectional area of each securing device is not to be less than:

$A = 1.4\ a/f$ cm^2

where:

a = Spacing between securing devices not to be taken less than 2 meters.

f = $(\sigma_Y / 235)^e$

σ_Y = Specified minimum upper yield stress in N/mm^2 of the steel used for fabrication, not to be taken greater than 70% of the ultimate tensile strength.

e = 0.75 for $\sigma_Y > 235$

= 1.0 for $\sigma_Y \leq 235$

Rods or bolts are to have a net diameter not less than 19 mm for hatchways exceeding 5 m^2 in area.

(iii) Between cover and coaming and at cross-joints, a packing line pressure sufficient to obtain weathertightness is to be maintained by the securing devices.

For packing line pressures exceeding 5 N/mm, the cross section area is to be increased in direct proportion. The packing line pressure is to be specified.

(iv) The cover edge stiffness is to be sufficient to maintain adequate sealing pressure between securing devices. The moment of inertia, I, of edge elements is not to be less than:

$I = 6\ p\ a^4$ cm^4

where:

p = Packing line pressure in N/mm, minimum 5 N/mm.

a = Spacing in m of securing devices.

(v) Securing devices are to be of reliable construction and securely attached to the hatchway coamings, decks or covers. Individual securing devices on each cover are to have approximately the same stiffness characteristics.

(vi) Where rod cleats are fitted, resilient washers or cushions are to be incorporated.

(vii) Where hydraulic cleating is adopted, a positive means is to be provided to ensure that it remains mechanically locked in the closed position in the event of failure of the hydraulic system.

1A.8.3 Stoppers

(a) No. 1 and 2 hatch covers are to be effectively secured, by means of stoppers, against the transverse forces arising from a pressure of 175 kN/m^2.

(b) No. 2 hatch covers are to be effectively secured, by means of stoppers, against the longitudinal forces acting on the forward end arising from a pressure of 175 kN/m^2.

(c) No. 1 hatch cover is to be effectively secured, by means of stoppers, against the longitudinal forces acting on the forward end arising from a pressure of 230 kN/m^2. This pressure may be reduced to 175 kN/m^2 if a forecastle is fitted.

(d) The equivalent stress

(i) in stoppers and their supporting structures, and

(ii) calculated in the throat of the stopper welds is not to exceed the allowable value of 0.8 σ_Y.

1A.8.4 Materials and welding

Where stoppers or securing devices are fitted to comply with 1A.8, they are to be manufactured of materials, including welding electrodes, meeting the relevant requirements of the Rules.

1A.9 Renewal Criteria for Side Shell Frames and Brackets in Single Side Skin Bulk Carriers not Built in Accordance with 1A.3

1A.9.1 Application and definitions

These requirements apply to the side shell frames and brackets of cargo holds bounded by the single side shell of bulk carriers constructed with single deck, topside tanks and hopper tanks in cargo spaces intended primarily to carry dry cargo in bulk, which were not built in accordance with 1A.3.

Ships subject to these requirements are to be assessed for compliance with the requirements of 1A.9 and steel renewal, reinforcement or coating, where required in accordance with 1A.9, is to be carried out in accordance with the schedule as specified in 1A.8.1(b) to (c) and at subsequent intermediate and special surveys.

These requirements define steel renewal criteria or other measures to be taken for the webs and flanges of side shell frames and brackets as per 1A.9.2. Reinforcing measures of side frames are also defined as per 1A.9.2(e).

(a) Ice strengthened ships

(i) Where bulk carriers are reinforced to comply with an ice class notation, the intermediate frames are not to be included when considering compliance with 1A.9.

(ii) The renewal thicknesses for the additional structure required to meet the ice strengthening notation are to be based on the Society's requirements.

(iii) If the ice class notation is requested to be withdrawn, the additional ice strengthening structure, with the exception of tripping brackets (see 1A.9.2(b)(i)(2) and 1A.9.2(e), is not to be considered to contribute to compliance with 1A.9.

1A.9.2 Criteria for renewal or other measures

(a) Symbols used in 1A.9.2

t_M = Thickness as measured, in mm.
t_{REN} = Thickness at which renewal is required. See 1A.9.2(b).
$t_{REN,d/t}$ = Thickness criteria based on d/t ratio. See 1A.9.2(b)(i).
$t_{REN,S}$ = Thickness criteria based on strength. See 1A.9.2(b)(ii).
t_{COAT} = 0.75 t_{S12}
t_{S12} = Thickness in mm as required by 1A.3.3 for frame webs and 1A.3.4 for upper and lower brackets.
t_{AB} = Thickness as built, in mm
t_C = See Table III 1A-1 below

Table III 1A-1
t_C Values, in mm

Ship's length L, in m	Holds other than No. 1		Hold No. 1	
	Span and upper brackets	Lower brackets	Span and upper brackets	Lower brackets
≤ 100	2.0	2.5	2.0	3.0
150	2.0	3.0	3.0	3.5
≥ 200	2.0	3.0	3.0	4.0

Note: For intermediate ship lengths, t_c is obtained by linear interpolation between the above values.

(b) Criteria for webs (Shear and other checks)

The webs of side shell frames and brackets are to be renewed when the measured thickness (t_M) is equal to or less than the thickness (t_{REN}) as defined below:

t_{REN} is the greatest of ($t_{COAT} - t_C$), (0.75 t_{AB}), ($t_{REN,d/t}$) and ($t_{REN,S}$) (where required by 1A.9.2(b)(ii)).

(i) Thickness criteria based on d/t ratio

Subject to (2) and (3) below, $t_{REN,d/t}$ is given by the following equation:

$t_{REN,d/t}$ = (web depth in mm)/R

where:

For frames

R = $65K^{0.5}$ for symmetrically flanged frames.
= $55K^{0.5}$ for asymmetrically flanged frames.

For lower brackets (see (1) below)

R = $87K^{0.5}$ for symmetrically flanged frames.
= $73K^{0.5}$ for asymmetrically flanged frames.

K = 1.0 for ordinary hull structural steel and according to 1.5.2(a) of Part II of the Rules for higher tensile steel.

In no instance is $t_{REN,d/t}$ for lower integral brackets to be taken as less than $t_{REN,d/t}$ for the frames they support.

(1) Lower brackets

In calculating the web depth of the lower brackets, the following will apply:

a) The web depth of lower bracket may be measured from the intersection of the sloped bulkhead of the hopper tank and the side shell plate, perpendicularly to the face plate of the lower bracket (see Fig.III 1A-20).

b) Where stiffeners are fitted on the lower bracket plate, the web depth may be taken as the distance between the side shell and the stiffener, between the stiffeners or between the outermost stiffener and the face plate of the brackets, whichever is the greatest.

(2) Tripping bracket alternative

When t_M is less than $t_{REN,d/t}$ at section b) of the side frames as shown in Fig. III 1A-19, tripping brackets in accordance with 1A.9.2(e) may be fitted as an alternative to the requirements for the web depth to thickness ratio of side frames, in which case $t_{REN,d/t}$ may be disregarded in the determination of t_{REN} in accordance with 1A.9.2(b).

(3) Immediately abaft collision bulkhead

For the side frames located immediately abaft the collision bulkheads, whose scantlings are increased in order that their moment of inertia is such to avoid undesirable flexibility of the side shell, when their web as built thickness t_{AB} is greater than $1.65 \cdot t_{REN,S}$, the thickness $t_{REN,d/t}$ may be taken as the value $t'_{REN,d/t}$ obtained from the following equation:

$$t'_{REN,d/t} = \sqrt[3]{t^2_{REN,\frac{d}{t}} \times t_{REN,S}}$$

where $t_{REN,S}$ is obtained from 1A.9.3(c).

(ii) Thickness criteria based on shear strength check

Where t_M in the lower part of side frames, as defined in Fig. III 1A-18, is equal to or less than t_{COAT}, $t_{REN,S}$ is to be determined in accordance with 1A.9.3(c).

(iii) Thickness of renewed webs of frames and lower brackets

Where steel renewal is required, the renewed webs are to be of a thickness not less than t_{AB}, 1.2 t_{COAT} or 1.2 t_{REN}, whichever is the greatest.

(iv) Criteria for other measures

When $t_{REN} < t_M < t_{COAT}$, measures are to be taken, consisting of all the following:

(1) sand blasting, or equivalent, and coating (see 1A.9.2(d));

(2) fitting tripping brackets (see 1A.9.2(e)), when the above condition occurs for any of the side frame zones A, B, C and D, shown in Fig. III 1A-18, and

(3) maintaining the coating in "as-new" condition (i.e. without breakdown or rusting) at Special and Intermediate Surveys.

The above measures may be waived if the structural members show no thickness diminution with respect to the as built thicknesses and coating is in "as-new" condition (i.e. without breakdown or rusting).

(c) Criteria for frames and brackets (Bending check)

Where the length or depth of the lower bracket does not meet the requirements in 1A.3, a bending strength check in accordance with 1A.9.3(d) is to be carried out and renewals or reinforcements of frames and/or brackets effected as required therein.

(d) Thickness measurements, steel renewal, sand blasting and coating

For the purpose of steel renewal, sand blasting and coating, four zones A, B, C and D are defined, as shown in Fig. III 1A-18.

Representative thickness measurements are to be taken for each zone and are to be assessed against the criteria in 1A.9.2.

In case of integral brackets, when the criteria in 1A.9.2 are not satisfied for zone A or B, steel renewal, sand blasting and coating, as applicable, are to be done for both zones A and B.

In case of separate brackets, when the criteria in 1A.9.2 are not satisfied for zone A or B, steel renewal, sand blasting and coating is to be done for each one of these zones, as applicable.

When steel renewal is required for zone C according to 1A.9.2, it is to be done for both zones B and C. When sand blasting and coating is required for zone C according to 1A.9.2, it is to be done for zones B, C and D.

When steel renewal is required for zone D according to 1A.9.2, it needs only to be done for this zone. When sand blasting and coating is required for zone D according to 1A.9.2, it is to be done for both zones C and D.

Special consideration may be given by the Society to zones previously renewed or recoated, if found in "as-new" condition (i.e., without breakdown or rusting).

When adopted, on the basis of the renewal thickness criteria in 1A.9.2, in general coating is to be applied in compliance with the requirements of 23.1.6, Part II of the Rules as applicable.

Where, according to the requirements in 1A.9.2, a limited number of side frames and brackets are shown to require coating over part of their length, the following criteria apply.

(i) The part to be coated includes:

(1) the web and the face plate of the side frames and brackets,

(2) the hold surface of side shell, hopper tank and topside tank plating, as applicable, over a width not less than 100 mm from the web of the side frame.

(ii) Epoxy coating or equivalent is to be applied.

In all cases, all the surfaces to be coated are to be sand blasted prior to coating application.

(e) Reinforcing measures

Reinforcing measures are constituted by tripping brackets, located at the lower part and at midspan of side frames (see Fig. III 1A-4). Tripping brackets may be located at every two frames, but lower and midspan brackets are to be fitted in line between alternate pairs of frames.

The thickness of the tripping brackets is to be not less than the as-built thickness of the side frame webs to which they are connected.

Double continuous welding is to be adopted for the connections of tripping brackets to the side shell frames and shell plating.

(f) Weld throat thickness

In case of steel renewal the welded connections are to comply with 1A.3.7.

(g) Pitting and grooving

If pitting intensity is higher than 15% in area (see Fig. III 1A-21), thickness measurement is to be taken to check pitting corrosion.

The minimum acceptable remaining thickness in pits or grooves is equal to:

(i) 75% of the as built thickness, for pitting or grooving in the frame and brackets webs and flanges.

(ii) 70% of the as built thickness, for pitting or grooving in the side shell, hopper tank and topside tank plating attached to the side frame, over a width up to 30 mm from each side of it.

1A.9.3 Strength check criteria

In general, loads are to be calculated and strength checks are to be carried out for the aft, middle and forward frames of each hold. The scantlings required for frames in intermediate positions are to be obtained by linear interpolation between the results obtained for the above frames.

When scantlings of side frames vary within a hold, the required scantlings are also to be calculated for the mid frame of each group of frames having the same scantlings. The scantlings required for frames in intermediate positions are to be obtained by linear interpolation between the results obtained for the calculated frames.

(a) Load model

(i) Forces

The forces $P_{fr,a}$ and $P_{fr,b}$, in kN, to be considered for the strength checks at sections a) and b) of side frames (specified in Fig. III 1A-19; in the case of separate lower brackets, section b) is at the top of the lower bracket), are given by:

$$P_{fr,a} = P_S + \max(P_1, P_2)$$
$$P_{fr,b} = P_{fr,a}\frac{h-2h_B}{h}$$

where:

P_S = Still water force, in kN.

= $sh\frac{(p_{S,U}+p_{S,L})}{2}$ when the upper end of the side frame span h (see Fig. III 1A-18) is below the load water line.

= $sh'\left(\frac{p_{S,L}}{2}\right)$ when the upper end of the side frame span h (see Fig. III 1A-18) is at or above the load water line.

P_1 = $sh\frac{(p_{1,U}+p_{1,L})}{2}$,wave force, in kN, in head sea.

P_2 = $sh\frac{(p_{2,U}+p_{2,L})}{2}$,wave force, in kN, in beam sea.

h, h_B = Side frame span and lower bracket length, in m, defined in Fig. III 1A-18 and 19, respectively.

h' = Distance, in m, between the lower end of side frame span h (see Fig. III 1A-18) and the load water line.

s = Frame spacing, in m.

$p_{S,U}$, $p_{S,L}$ = Still water pressure, in kN/m^2, at the upper and lower end of the side frame span h (see Fig. III 1A-18), respectively.

$p_{1,U}$, $p_{1,L}$ = Wave pressure, in kN/m^2, at defined in 1A.9.3(a)(ii)(1). below for the upper and lower end of the side frame span h, respectively.

$p_{2,U}$, $p_{2,L}$ = Wave pressure, in kN/m^2, as defined in 1A.9.3(a)(ii)(2). below for the upper and lower end of the side frame span h, respectively.

(ii) Wave Pressure

(1) Wave pressure p_1

a) The wave pressure p_1, in kN/m^2, at and below the waterline is given by:

$$p_1 = 1.50\left[p_{11} + 135\frac{B}{2(B+75)} - 1.2(d-z)\right]$$
$$p_{11} = 3k_sC + k_f$$

b) The wave pressure p_1, in kN/m^2, above the water line is given by:

$$p_1 = p_{1WL} - 7.50(z-d)$$

(2) Wave pressure p_2

a) The wave pressure p_2, in kN/m^2, at d and below the waterline is given by:

$$p_2 = 13.0\left[0.5B\frac{50C_r}{2(B+75)} + C_b\frac{0.5B+k_f}{14}\left(0.7+2\frac{z}{d}\right)\right]$$

b) The wave pressure p_2, in kN/m^2, above the water line is given by:

$p_2 = p_{2WL} - 5.0(z - d)$

where:

p_{1WL} = p_1 wave sea pressure at the waterline.
p_{2WL} = p_2 wave sea pressure at the waterline.
L = Length of ship, in m, as defined in 1.2, Part II of the Rules.
B = Greatest moulded breadth, in m.
C_b = Block coefficient, as defined in 1.2, Part II of the Rules but not to be taken less than 0.6.
d = Maximum design draught, in m.
C = Coefficient,
= $10.75 - \left(\frac{300-L}{100}\right)^{1.5}$ for 90 m ≤ L ≤ 300m,
= 10.75 for 300 m < L.
C_r = $\left(1.25 - 0.025\frac{2k_r}{\sqrt{GM}}\right)k$
k = 1.2 for ships without bilge keel.
= 1.0 for ships with bilge keel.
k_r = Roll radius of gyration. If the actual value of k_r is not available,
= 0.39 B for ships with even distribution of mass in transverse section (e.g. alternate heavy cargo loading or homogeneous light cargo loading).
= 0.25 B for ships with uneven distribution of mass in transverse section (e.g. homogeneous heavy cargo distribution).
GM = 0.12 B if the actual value of GM is not available.
z = Vertical distance, in m, from the baseline to the load point.
k_S = $C_b + \frac{0.83}{\sqrt{C_b}}$ at aft end of L,
= C_b between 0.2 L and 0.6 L from aft end of L,
= $C_b + \frac{1.33}{C_b}$ at forward end of L.
Between the above specified points, k_s is to be interpolated linearly.
k_f = 0.8 C

(b) Allowable stresses

The allowable normal and shear stresses σ_a and τ_a, in N/mm^2, in the side shell frames and brackets are given by:

$\sigma_a = 0.90\sigma_F$
$\tau_a = 0.40\sigma_F$

where σ_F is the minimum upper yield stress, in N/mm^2, of the material.

(c) Shear strength check

Where t_M in the lower part of side frames, as defined in Fig. III 1A-18, is equal to or less than t_{COAT}, shear strength check is to be carried out in accordance with the following.

The thickness $t_{REN,S}$, in mm, is the greater of the thicknesses $t_{REN,Sa}$ and $t_{REN,Sb}$ obtained from the shear strength check at sections a) and b) (see Fig. III 1A-19 and 1A.9.3(a)) given by the following, but need not be taken in excess of $0.75t_{S12}$.

(i) At sections a): $t_{REN,Sa} = \frac{1000k_s p_{fr,a}}{d_a \sin\phi \tau_a}$

(ii) At sections b): $t_{REN,Sb} = \frac{1000k_s p_{fr,b}}{d_b \sin\phi \tau_a}$

where:

k_s = Shear force distribution factor, to be taken equal to 0.6
$P_{r,a}, P_{r,b}$ = Pressures forces defined in 1A.9.3(a)(i).
d_a, d_b = Bracket and frame web depth, in mm, at sections a) and b), respectively (see Fig. III 1A-19); in case of separate (non integral) brackets, d_b is to be taken as the minimum web depth deducing possible scallops.
ϕ = Angle between frame web and shell plate.
τ_a = Allowable shear stress, in N/mm^2, defined in 1A.9.3(b).

(d) Bending strength check

Where the lower bracket length or depth does not meet the requirements in 1A.3.4, the actual section modulus, in cm^3, of the brackets and side frames at sections a) and b) is to be not less than:

(i) At section a): $Z_a = \frac{1000 p_{fr,a} h}{m_a \sigma_a}$

(ii) At section b): $Z_b = \frac{1000 p_{fr,b} h}{m_b \sigma_a}$

where:

$p_{fr,a}$ = Pressures force defined in 1A.9.3(a)(i).
h = Side frame span, in m, defined in Fig. III 1A-18.
σ_a = Allowable normal stress, in N/mm^2, defined in 1A.9.3(b).
m_a, m_b = Bending moment coefficients defined in Table III 1A-2.

The actual section modulus of the brackets and side frames is to be calculated about an axis parallel to the attached plate, based on the measured thicknesses. For pre-calculations, alternative thickness values may be used, provided they are not less than:

- t_{REN}, for the web thickness.
- the minimum thicknesses allowed by the Society renewal criteria for flange and attached plating.

The attached plate breadth is equal to the frame spacing, measured along the shell at midspan of h.

If the actual section moduli at sections a) and b) are less than the values Z_a and Z_b, the frames and brackets are to be renewed or reinforced in order to obtain actual section moduli not less than 1.2 Z_a and 1.2 Z_b, respectively.

In such a case, renewal or reinforcements of the flange are to be extended over the lower part of side frames, as defined in Fig. III 1A-18.

Table III 1A-2
Bending Moment Coefficients m_a and m_b

	m_a	m_b		
		$h_B = 0.08h$	$h_B = 0.1h$	$h_B = 0.125h$
Empty holds of ships approved to operate in non-homogeneous loading conditions	10	17	19	22
Other cases	12	20	22	26

Notes:

(1) Non homogeneous loading condition means a loading condition in which the ratio between the highest and the lowest filling ratio, evaluated for each hold, exceeds 1.20 corrected for different cargo densities.

(2) For intermediate values of the bracket length h_B, the coefficient m_b is obtained by linear interpolation between the table values.

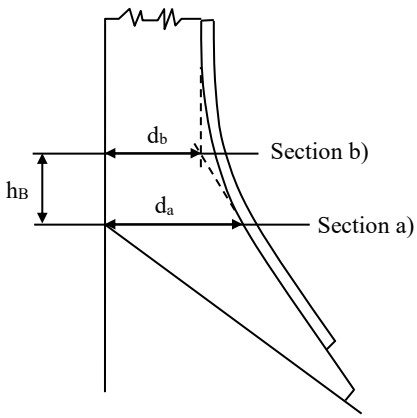

Fig. III 1A-18
Lower Part and Zones of Side Frames

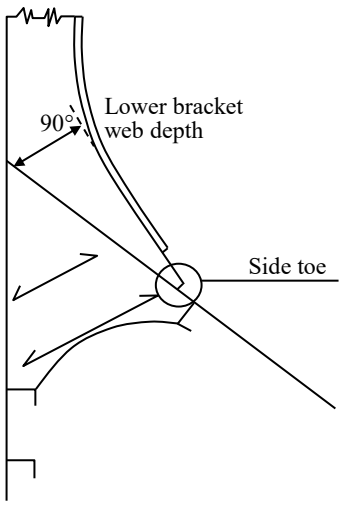

d_a = lower bracket web depth for determining $t_{REN,S}$
d_b = frame web depth
h_B = lower bracket length

Fig. III 1A-19
Sections a) and b)

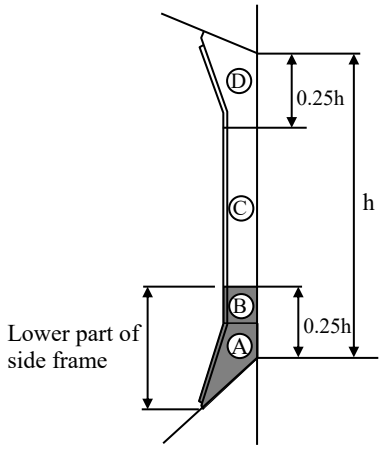

Fig. III 1A-20
Definition of the Lower Bracket Web Depth for Determining $t_{REN,d/t}$

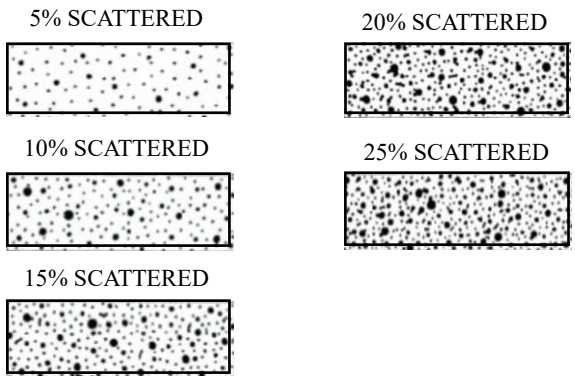

Fig. III 1A-21
Pitting Intensity Diagrams (from 5% to 25% Intensity)

Chapter 2
Oil Tankers

2.1 General

2.1.1 For double hull oil tankers of 150 m in length or greater, classed with the Society and contracted for construction on or after 1 April 2006, the structural requirements are to be in accordance with IACS's Common Structural Rules for Oil Tankers. For regions of the structure, which IACS's Common Structural Rules do not cover, the relevant requirements of the Society's Rules are to be applied, with appropriate consideration to related provisions of the Common Structural Rules.

2.1.2 This Chapter applies to ships classed in accordance with the provisions in Chapter 1 of Part I and built for the purpose of carrying oil in bulk having a specific gravity not exceeding 1.05, and flash point at or below 60°C closed cup test. For oil tankers intended to carry oil having a flash point above 60°C and assigned a service notation in accordance with 1.4.5 of Part I, the requirements for cofferdams and gastight bulkheads may be modified.

2.1.3 Except otherwise provided by this chapter, the requirements for the construction of general ships given in Part II are to be applied.

2.1.4 Scantling requirements given in this Chapter are generally intended to apply to single deck tankers with machinery aft and having two or more longitudinal bulkheads. The bottom and the deck are to be framed longitudinally in cargo oil tank spaces. Side frames and bulkhead stiffeners may be arranged either horizontally or vertically. The scantling for the ship constructions other than those mentioned above may be specially considered by the Society.

2.1.5 Tank arrangement

Oil tankers are to comply with the requirements in 2A.2.1, 2A.2.2, 2A.2.3 of Chapter 2A with regard to segregated ballast tanks, protective location, hypothetical outflow of oil, limitation of size and arrangement of cargo tanks and subdivision and damage stability.

2.1.6 Cofferdams

(a) Cofferdams are to be provided to separate cargo oil tanks from the galley, living quarters, the navigation space, general cargo spaces, boiler room and enclosed spaces containing machinery, where sources of vapour ignition are normally present.

(b) The width of cofferdams is at least to be adequate for ready access.

(c) Pump rooms may be considered as cofferdams provided that they have no direct access to the machinery space, the service passage, or the accommodation.

(d) Cofferdams may be omitted provided that the space immediately adjacent to the cargo oil space is a ballast tank or a completely welded fuel oil tank carrying liquid oil having a flash point above 60°C.

(e) Any access or opening to cofferdams is to be from the open deck.

(f) Where a corner to corner situation occurs between a safe space and a cargo tank, a diagonal plate across the corner may be accepted as a cofferdams. Such cofferdams are to be ventilated if accessible or filled with a suitable compound if not accessible.

2.1.7 Gastight bulkheads complying with the requirement of Chapter 14 Part II are to be provided for the isolation of cargo pump and piping from spaces containing stoves, boilers, propelling machinery, electric apparatus other than those of explosion proof type, or machinery where sources of ignition are normally present.

2.1.8 Vent holes are to be cut in structural members to prevent the gas to be "Pocketed"; Special attention is to be paid to the effective ventilation of the pump room, cofferdam and other working spaces adjacent to cargo oil tanks.

2.1.9 The thickness of any part of the structural members in the cargo tank spaces is not to be less than:

0.025L + 6.5 mm, or

11.5 mm

Whichever is the lesser.

2.1.10 When an approved method of protection against corrosion is adopted in cargo spaces, and after all minimum thickness and longitudinal strength requirements have been satisfied, approval may be given for the following reduction in thickness.

(a) 10% for plating and stiffeners of transverse and longitudinal bulkheads; bottom, side and deck transverses; transverse side framing; vertical webs and horizontal girders; cross ties.

(b) 5% for keels, bottom and side shells, deck plating, bottom, side and deck longitudinals, bottom and deck centerline and side girders.

(c) The minimum thickness of remaining items may be 1.0 mm less than the minimum given in 2.1.9 of this Part.

2.1.11 Tanks forward of the collision bulkhead are not to be arranged for the carriage of oil or other liquid substances that are flammable.

2.2 Special Conditions of Assignment for Tanker Freeboard

2.2.1 For ships intended to be operated at the freeboard for type "A" ships the following conditions are to be complied with.

2.2.2 Machinery casings

(a) The machinery casing is to be protected by an enclosed poop or bridge of at least standard height, or by a deckhouse of equal height and equivalent strength, provided that machinery casings may be exposed if there are no openings giving direct access from the freeboard deck to the machinery space. Weathertight doors of steel or other equivalent materials may, however, be permitted in the machinery casing, provided that it leads to a space or passageway which is as strongly constructed as the casing and is separated from the stairways to the engine room by a second weathertight door of steel or other equivalent materials. The sill height of the exterior door is not to be less than 600 mm and of the second not less than 230 mm.

(b) The standard height of a superstructure is to be as follows:

1.8	m	for $L_f \leq 75$ m
$1.8 + 0.5\left(\frac{L_f - 75}{50}\right)$	m	for 75 m $< L_f <$ 125 m
2.3	m	for $L_f \geq 125$ m

2.2.3 Gangways and accesses

(a) An efficiently constructed fore and aft permanent gangway of sufficient strength is to be fitted on the ship at the level of the superstructure deck between the poop and the midship bridge or deckhouse where fitted, or equivalent means of access are to be provided in lieu of the gangway, such as passages below the deck. Elsewhere, and on type "A" ships without a midship bridge, arrangements to the satisfaction of the Society are to be provided to safeguard the crew in reaching all parts of the ship to carry out the necessary work.

(b) Safe and satisfactory access from the gangway level is to be available between separate crew accommodations and also between crew accommodations and the machinery space.

2.2.4 Exposed hatchways on the freeboard and forecastle decks or on tops of expansion trunks on type "A" ships are to be provided with efficient watertight covers of steel or other equivalent materials.

2.2.5 Freeing arrangements

(a) Type "A" ships with bulwarks are to have open rails fitted for at least half the length of the exposed parts of the weather deck or other effective freeing arrangements. The upper edge of the sheer strakes is to be kept as low as practicable.

(b) Where superstructures are connected by trunks, open rails are to be fitted for the whole length of exposed parts of the freeboard deck.

2.3 Primary Supporting Members-Webs, Girders, Transverses and Cross Ties

2.3.1 The depth measured at the middle of the span l of primary supporting members is not to be less than the following requirements:

(a) The depth of side and deck transverses, webs and horizontal girders of longitudinal bulkheads, and stringers is not to be less than 12.5% of the span l.

(b) The depth of deck centerline girders, webs and the horizontal girders of transverse bulkheads, bottom transverses and bottom centerline girders is not to be less than 20% of the span l.

(c) The depth of side transverses and vertical webs may be tapered from bottom to top by an amount not exceeding 20% of the depth measured at the middle of the span l.

(d) In no case is the depth of the member to be less than 3 times the depth of the slot for longitudinals.

2.3.2 The thickness of webs is not to be less than 8.0 mm in the ship 45 m in length and 12.5 mm in ships 210 m in length and above with the intermediate thickness used at lengths between 45 m and 210 m.

2.3.3 The section modulus of the member in association with an effective area of plating of a width equal to s, or l/3, whichever is the lesser, and the thickness equal to the mean thickness of the plating attached is not to be less than that given in the following:

$Cshl^2$ cm^3

where:

s = The spacing of transverses, webs, girders or stringers, in m.

h = The depth of the ship (D) for bottom transverses and girders, in m, and for others h is the vertical distance from the middle of the span *l*, or the center of the area supported to a point located 1.2 m above the deck at side amidships in ships 60 m in length and under, and to a point located 2.4 m above the deck at side amidships in 120 m in length and above. For intermediate lengths, intermediate points may be used. The value of h is not to be less than the distance to the top of the hatch. For deck transverses and girders h is not to be less than 0.15 D.

l = The unsupported span of transverses, webs, girders or stringers as shown in Fig. III 2-1, in m. For deck and bottom transverses in wing tanks, *l* is not to be less than the half breadth of the wing tank. Where intercostal centerline bottom and deck girders are arranged, the span of the bottom and deck transverses in the center tank is to be determined without consideration of the center line bottom and deck girders.

C = 7.0, 4.0, 3.0, 2.5 and 3.5 for the side transverse and the vertical web of the longitudinal bulkhead where there is no cross tie, one cross tie, 2 cross ties, 3 or more cross ties, and one horizontal and 3 diagonal cross ties meeting at the side transverse respectively.

= 8.5 for the bottom transverse in the center tank with continuous bottom center line girder.

= 7.3 for the bottom transverse in the center tank with intercostal bottom center line girder.

= 5.6 for the bottom transverse in the center tank with 3 continuous bottom girders.

= 9.5 for the continuous bottom center line girder, the vertical web of the transverse bulkhead, the horizontal girder and the stringer.

= 12 for the bottom transverse in the wing tank, the deck transverse in the center tank with continuous deck center line girder and the continuous deck center line girder.

= 8.65 for the deck transverse in the center tank with intercostal center line deck girder.

= 17 for the deck transverse in the win tank.

In ships without a continuous bottom center line girder, the intercostal center line docking girder is to be provided having sufficient strength depending upon docking conditions and support arrangements.

2.3.4 The net sectional area of the web plate, including effective brackets where applicable, at any section of its length is not to be less than:

$$0.117\,Q \qquad \text{cm}^2$$

where:

Q = Shear force at the actual section under consideration obtained by means of an acceptable method of engineering analysis, in kN.

2.3.5 The sectional area of the cross tie is not to be less than that given in the following:

$$\frac{0.875\text{sbh}}{1-0.37\frac{l}{\text{r}}} \qquad \text{cm}^2$$

where:

l = The length of the cross tie, in m.

b = The breadth of the area supported, in m.

r = The least radius of gyration of the cross tie, in cm.

s and h are to be as defined in 2.3.3 of this Part.

2.3.6 The web of the transverse, the horizontal girder and the vertical web are to be efficiently stiffened and their face plates or flanges are to be properly supported by tripping brackets.

2.3.7 The lightening hole cut in the web of the primary supporting member is to be located at not less than 30% of the depth of the web from the face plate and the corner of the notch and its diameter is not to exceed 25% of the depth of the web.

2.4 Longitudinal Strength

2.4.1 The longitudinal strength is to be as required by Chapter 3 of Part II.

2.4.2 A loading manual as required by Chapter 3 of Part II is to be prepared to the satisfaction of the Society and furnished to the master of the ship for guidance. Alternative means of obtaining this information are to be considered.

2.5 Shell and Deck Plating

2.5.1 The thickness of the shell and deck plating is not to be less than that required to provide the longitudinal strength in accordance with Chapter 3 of Part II nor is to be less than as required in Chapters 7 and 11 of Part II respectively.

2.6 Structural Sections

2.6.1 The section modulus of the structural section is not to be less than that given by the following:

$Csh\ell^2$ cm^3

where:

s = The spacing of structural sections, in m.

h = As defined in 2.3.3 of this Part. The value of "h" for the bulkhead stiffener and the deck longitudinal is not to be less than he distance from the stiffener or the longitudinal to the top of the hatch, in m.

C = 7.50 for the horizontal stiffener on the longitudinal bulkhead.

= 7.75 for the side longitudinal.

= 8 for the vertical shell frame, the horizontal or the vertical stiffener on the transverse bulkhead and the vertical stiffener on the longitudinal bulkhead.

= 10 for the deck longitudinal.

= 11.5 for the bottom longitudinal.

ℓ = The unsupported span of structural sections as shown in Fig. III 2-2, in m.

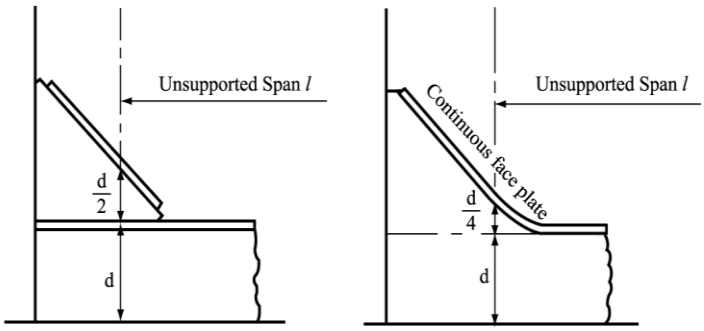

Fig. III 2-1
Unsupported Span ℓ for Primary Supporting Member

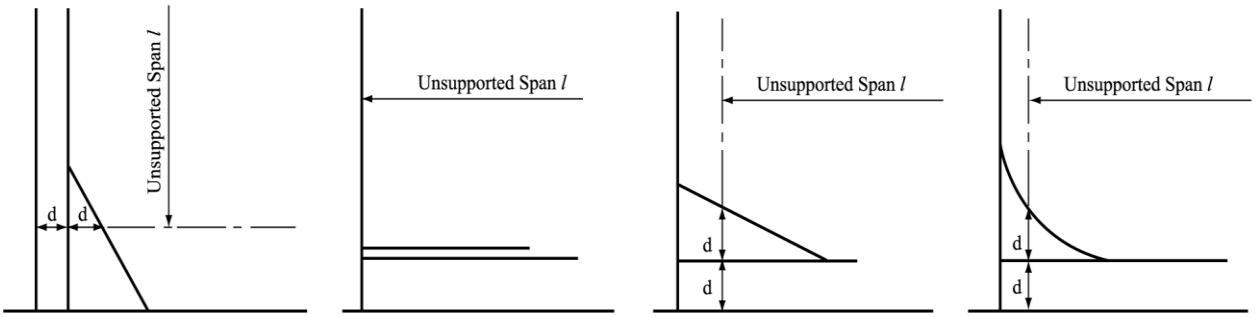

Fig. III 2-2
Unsupported Span *l* for Structural Section

2.6.2 Longitudinals around the bilge are to be gradated in size from that required for the lowest side longitudinals to that required for the bottom longitudinals.

2.7 Bulkhead Plating

2.7.1 General

(a) Longitudinal bulkheads may be plane or horizontally corrugated.

(b) Transverse bulkheads may be plane or arranged horizontally or vertically corrugated.

2.7.2 Scantling

(a) The plate thickness of plane bulkheads is to be determined from 16.2.2 of Part II, where h is to be measured from the lower edge of the plate to the top of the hatch or to a point located at 1.2 m above the deck at side amidships, whichever is the greater.

(b) The thickness and breadth of top strakes of the longitudinal bulkhead

(i) The thickness of top strakes of the longitudinal bulkhead is not to be less than that given in the following:

$0.045L + 4.5$ mm

(ii) The breadth of top strakes of the longitudinal bulkhead is not to be less than that given in the following:

$100D$ mm

where:
L = Length of ship, in m.
D = Depth of ship, in m.

(c) The section modulus of the stiffener is to be determined in accordance with 2.6.1 of this Part.

2.8 Structural Requirements beyond Cargo Spaces and at Ends

2.8.1 The scantling of primary supporting members and structural sections beyond cargo spaces may be as required in way of cargo oil spaces in association with the values of "h" in the various formulae measured to the upper deck, except:

(a) In way of deep tanks, the value of "h" for determining the scantling of structures is not to be less than the distance measured to the top of the overflow.

(b) In way of dry spaces.

(i) The scantling of deck beams and longitudinals is to be as required in Chapter 9 of Part II.

(ii) The section modulus of deck transverses is to be obtained from the formula given in 2.3.3 of this Part by using:

C = 6.0
h = As required in Chapter 9 of Part II.

2.9 Finite Element Analyses

2.9.1 Where finite element analysis are employed to determine the scantling of structural members, consideration is to be given to the following local loading conditions:

(a) Center tank loaded; wing tank empty; 1/3 summer load line draft.

(b) Center tank empty; wing tank loaded; 1/3 summer load line draft.

(c) Center and wing tank loaded; 1/3 summer load line draft.

(d) Center tank loaded; wing tank empty; summer load line draft.

(e) Center tank empty; wing tank loaded; summer load line draft.

2.9.2 For loaded tanks, the water head up to the level of 2.45 m above the deck at side is to be applied.

2.9.3 The calculated stresses using the loading conditions specified in 2.9.1 are not to exceed the following permissible bending and average shearing stresses:

Members			Stress
Transverse members		Web σ_e	$\frac{200}{K}$ N/mm^2
Longitudinal members	Within 0.4L amidships	Face σ_n	$\frac{188}{K}$ N/mm^2
		Web τ_n	$\frac{85}{K}$ N/mm^2
		Web σ_e	$\frac{177}{K}$ N/mm^2
	Others	Face σ_n	$\frac{166}{K}$ N/mm^2
		Web τ_n	$\frac{69}{K}$ N/mm^2

where:

σ_e = Von Mises equivalent stress

= $\sqrt{\sigma_x^2 + \sigma_y^2 - \sigma_x\sigma_y + 3\tau^2}$

σ_x = In-plane stress in x-direction.

σ_y = In-plane stress in y-direction.

τ = Shear stress in xy-plane.

σ_n = Axial stress of face plate.

τ_n = Average shearing stress.

K = Material factor as defined in 1.5.2 of Part II.

2.9.4 Detail calculations for buckling control of stiffeners subjected to large axial compressive stress are also to be considered.

2.10 Structural Details

2.10.1 All main structural members are to be so arranged that continuity of the strength is ensured.

2.10.2 Primary supporting members are as far as practicable to be connected to one another so as to complete planes of stiffness.

2.10.3 If the edge of the primary supporting member is flanged, the arrangement at the junction of the member and the bracket is to be of careful design and execution.

2.10.4 The bracket of the primary supporting member is generally to be of the same thickness as the thinner one of these two adjacent members, and to be flanged at their edges, and are to be suitably stiffened.

2.10.5 Where members about on both sides of the bulkhead or on other members, care is to be taken that they are in alignment.

2.10.6 Where the bracket is attached to the unsupported plating, suitable arrangement is to be made to distribute the load effectively.

2.10.7 The notch is to have well rounded corners and smooth edges and not to be larger than necessary. When the notch occurs at such a point as adjacent to the toe of a bracket, where stress concentration may develop, a welded collar or equivalent reinforcement is to be fitted. The collar is also to be fitted in way of the cross tie.

2.10.8 Small drains or air holes cut in primary supporting members or structural sections are to be kept clear of the toe of end brackets and their edges are to be well rounded.

2.10.9 Welding

The special requirements of welded construction for oil tanker are to comply with the requirements given in Chapter 5 of Part XII.

2.11 Safe Access to Tanker Bows

2.11.1 Tankers are to be provided with means to enable the crew to gain safe access to the bow even in severe weather conditions. The access is to be by means of either a walkway on the deck or a permanently constructed gangway of substantial strength at or above the level of the superstructure deck or the first tier of a deck house which is to:

(a) be not less than 1 m in width, situated on or as near as practicable to the centre line of the ship and located so as not to hinder easy access across working areas of the deck; be fitted at each side throughout its length with a foot-stop and guard rails supported by stanchions. Such rails are to consist of no less than three courses, the lowest being not more than 230 mm and the uppermost being at least 1 m above the gangway or walkway, and no intermediate opening is to be more than 380 mm in height. Stanchions are to be at intervals of not more than 1.5m;

(b) be constructed of fire resistant and non-slip material;

(c) have openings, with ladders where appropriate, to and from the deck. Openings are not to be more than 40 m apart;

(d) if the length of exposed deck to be traversed exceeds 70 m, have shelters of substantial construction set in way of the gangways or walkways at intervals

(e) not exceeding 45 m. Every such shelter is to be capable of accommodating at least one person and be so constructed as to afford weather protection of the forward, port and starboard sides; and

(f) if obstructed by pipes or other fittings of a permanent nature, be provided with means of passage over such obstruction.

2.11.2 Alteration or modified arrangements for tanker with space constraint, such as small tankers, provided that such alteration or modified arrangements achieve an equivalent level of safety for access to the bow.

Chapter 2A
Double Hull Tankers

2A.1 General

2A.1.1 This chapter applies primarily to the arrangements and scantlings within the cargo tank region of sea going tankers having integral cargo tanks, for the carriage of oil having a flash point not exceeding 60°C (closed cup test) or other similar liquid cargoes.

2A.1.2 The requirements in this Chapter are framed for tankers with machinery aft having one or more longitudinal bulkheads and single deck with double bottom or with double hull structures or mid-deck.

2A.1.3 In case where the construction differs from that specified in 2A.1.2 and the requirements in this Chapter are considered to be not applicable. Matters are to be determined as deemed appropriate by the Society.

2A.1.4 As regards matters not specifically provided for in this Chapter, the general requirements for the construction and equipment of steel ships are to be applied.

2A.1.5 In addition to the requirements specified in 2A.1.4, the relevant requirements in Part IX of the Rules are to be applied to ships specified in 2A.1.1.

2A.2 Tank Arrangement

2A.2.1 Accidental oil outflow performance

(a) For the purpose of this paragraph, the following definitions shall apply:

(i) "Load line draught (d_S)" is the vertical distance, in m, from the moulded baseline at midlength to the waterline corresponding to the summer freeboard to be assigned to the ship. Calculations pertaining to this paragraph should be based on draught ds, notwithstanding assigned draughts that may exceed d_S, such as the tropical loadline.

(ii) "Waterline (d_B)" is the vertical distance, in meters, from the moulded baseline at midlength to the waterline corresponding to 30% of the depth D_S.

(iii) "Breadth (B_S)" is the greatest moulded breadth of the ship, in m, at or below the deepest load line d_S.

(iv) "Breadth (B_B)" is the greatest moulded breadth of the ship, in m, at or below the waterline d_B.

(v) "Depth (D_S)" is the moulded depth, in m, measured at midlength to the upper deck at side.

(vi) Length (L) means 96 per cent of the total length on a waterline at 85 per cent of the least moulded depth measured from the top of the keel, or the length from the foreside of the stem to the axis of the rudder stock on that waterline, if that be greater. In ships designed with a rake of keel the waterline on which this length is measured shall be parallel to the designed waterline. The length (L) shall be measured in m.

(vii) Deadweight (DW) means the difference in tonnes between the displacement of a ship in water of a relative density of 1.025 at the load waterline corresponding to the assigned summer freeboard and the lightweight of the ship.

(b) To provide adequate protection against oil pollution in the event of collision or stranding, the following shall be complied with:

(i) for oil tankers of 5,000 tonnes deadweight (DWT) and above, the mean oil outflow parameter shall be as follows:

$O_M \leq 0.015$ for $C \leq 200{,}000\ m^3$

$O_M \leq 0.012 + \frac{0.003}{200{,}000} \times (400{,}000 - C)$ for $200{,}000\ m^3 < C < 400{,}000\ m^3$

$O_M \leq 0.012$ for $C \geq 400{,}000\ m^3$

for combination carriers between 5,000 tonnes deadweight (DWT) and 200,000 m^3 capacity, the mean oil outflow parameter may be applied, provided calculations are submitted to the satisfaction of the Administration, demonstrating that after accounting for its increased structural strength, the combination carrier has at least equivalent oil outflow performance to a standard double hull tanker of the same size having a $O_M \leq 0.015$.

$O_M \leq 0.021$ for $C \leq 100{,}000\ m^3$

$O_M \leq 0.015 + \frac{0.006}{100{,}000} \times (200{,}000 - C)$ for $100{,}000\ m^3 < C \leq 200{,}000\ m^3$

where:

O_M = Mean oil outflow parameter.

C = Total volume of cargo oil, in m^3, at 98% tank filling

(ii) for oil tankers of less than 5,000 tonnes deadweight (DWT), The length of each cargo tank shall not exceed 10 m or one of the following values, whichever is the greater:

(1) where no longitudinal bulkhead is provided inside the cargo tanks:

$$\left(0.5\frac{b_i}{B} + 0.1\right)L \quad \text{but not to exceed } 0.2L$$

(2) where a centreline longitudinal bulkhead is provided inside the cargo tanks:

$$\left(0.25\frac{b_i}{B} + 0.15\right)L$$

(3) where two or more longitudinal bulkheads are provided inside the cargo tanks:

a) for wing cargo tanks: 0.2L

b) for centre cargo tanks:

i) if $b_i / B \geq 0.2L$: 0.2L

ii) if $b_i / B < 0.2L$:

1) where no centreline longitudinal bulkhead is provided: $(0.5b_i/B+0.1)L$

2) where a centreline longitudinal bulkhead is provided: $(0.25b_i/B+0.15)L$

(4) b_i is the minimum distance from the ship's side to the outer longitudinal bulkhead of the tank in question measured inboard at right angles to the centreline at the level corresponding to the assigned summer freeboard.

(c) The following general assumptions shall apply when calculating the mean oil outflow parameter:

(i) The cargo block length extends between the forward and aft extremities of all tanks arranged for the carriage of cargo oil, including slop tanks.

(ii) Where this paragraph refers to cargo tanks, it shall be understood to include all cargo tanks, slop tanks and fuel tanks located within the cargo block length.

(iii) The ship shall be assumed loaded to the load line draught ds without trim or heel.

(iv) All cargo oil tanks shall be assumed loaded to 98% of their volumetric capacity. The nominal density of the cargo oil (ρ_n) shall be calculated as follows:

$$\rho_n = \frac{1000(DWT)}{C} \quad kg/m^3$$

(v) For the purposes of these outflow calculations, the permeability of each space within the cargo block, including cargo tanks, ballast tanks and other non-oil spaces shall be taken as 0.99, unless proven otherwise.

(vi) Suction wells may be neglected in the determination of tank location provided that such wells are as small as practicable and the distance between the well bottom and bottom shell plating is not less than 0.5h, h = B/15, in m, or h = 2.0 m, whichever is the lesser. The minimum value of h = 1.0 m.

(d) The following assumptions shall be used when combining the oil outflow parameters:

(i) The mean oil outflow shall be calculated independently for side damage and for bottom damage and then combined into the non-dimensional oil outflow parameter O_M, as follows:

$$O_M = (0.4O_{MS} + 0.6O_{MB})/C$$

where:

O_{MS} = Mean outflow for side damage, in m^3; and
O_{MB} = Mean outflow for bottom damage, in m^3.

(ii) For bottom damage, independent calculations for mean outflow shall be done for 0 m and minus 2.5 m tide conditions, and then combined as follows:

$$O_{MB} = 0.7O_{MB(0)} + 0.3O_{MB(2.5)}$$

where:

$O_{MB(0)}$ = Mean outflow for 0 m tide condition; and
$O_{MB(2.5)}$ = Mean outflow for minus 2.5 m tide condition, in m^3.

(e) The mean outflow for side damage O_{MS} shall be calculated as follows:

$$O_{MS} = C_3 \sum_{i}^{n} P_{s(i)} O_{s(i)} \qquad m^3$$

where:

i = Represents each cargo tank under consideration;
n = Total number of cargo tanks;
$P_{s(i)}$ = The probability of penetrating cargo tank i from side damage, calculated in accordance with 2A.2.1(g)(i);
$O_{s(i)}$ = The outflow, in m^3, from side damage to cargo tank i, which is assumed equal to the total volume in cargo tank i at 98% filling, unless it is proven through the application of the Guidelines that any significant cargo volume will be retained; and
C_3 = 0.77 for ships having two longitudinal bulkheads inside the cargo tanks, provided these bulkheads are continuous over the cargo block and $P_{s(i)}$ is developed in accordance with this paragraph. C_3 equals 1.0 for all other ships or when $P_{s(i)}$ is developed in accordance with 2A.2.1(g).

(f) The mean outflow for bottom damage shall be calculated for each tidal condition as follows:

(i) $O_{MB(0)} = \sum_{i}^{n} P_{B(i)} O_{B(i)} C_{DB(i)} \qquad m^3$

where:

i = Represents each cargo tank under consideration;
n = The total number of cargo tanks;
$P_{B(i)}$ = The probability of penetrating cargo tank i from bottom damage, calculated in accordance with 2A.2.1(h)(i);
$O_{B(i)}$ = The outflow from cargo tank i, in m^3, calculated in accordance with 2A.2.1(f)(iii);
$C_{DB(i)}$ = Factor to account for oil capture as defined in 2A.2.1(f)(iv).

(ii) $O_{MB(2.5)} = \sum_i^n P_{B(i)} O_{B(i)} C_{DB(i)}$ m^3

where:

i, n, $P_{B(i)}$ and $C_{DB(i)}$ = As defined in subparagraph (i) above;

$O_{B(i)}$ = The outflow from cargo tank i, in m³, after tidal change

(iii) The oil outflow $O_{B(i)}$ for each cargo oil tank shall be calculated based on pressure balance principles, in accordance with the following assumptions:

(1) The ship shall be assumed stranded with zero trim and heel, with the stranded draught prior to tidal change equal to the load line draught d_s.

(2) The cargo level after damage shall be calculated as follows:

$$h_c = \frac{(d_s + t_c - Z_l)(\rho_s) - \frac{1000p}{g}}{\rho_n}$$

where:

h_c = The height of the cargo oil above Z_l, in m.

t_c = The tidal change, in m. Reductions in tide shall be expressed as negative values ;

Z_l = The height of the lowest point in the cargo tank above baseline, in m.

ρ_s = Density of seawater, to be taken as 1,025 kg/m³.

p = If an inert gas system is fitted, the normal overpressure, in kPa, is to be taken as 5 kPa; if an inert gas system is not fitted, the over pressure may be taken as 0;

g = The acceleration of gravity, to be taken as 9.81 m/s² and

ρ_n = Nominal density of cargo oil, calculated in accordance with 2A.2.1(c)(iv).

(3) For cargo tanks bounded by the bottom shell, unless proven otherwise, oil outflow $O_{B(i)}$ shall be taken not less than 1% of the total volume of cargo oil loaded in cargo tank *i*, to account for initial exchange losses and dynamic effects due to current and waves.

(iv) In the case of bottom damage, a portion from the outflow from a cargo tank may be captured by nonoil compartments. This effect is approximated by application of the factor $C_{DB(i)}$ for each tank, which shall be taken as follows:

$C_{DB(i)}$ = 0.6 for cargo tanks bounded from below by nonoil compartments;
$C_{DB(i)}$ = 1.0 for cargo tanks bounded by the bottom shell.

(g) The probability Ps of breaching a compartment from side damage shall be calculated as follows:

(i) $P_S = P_{SL} \cdot P_{SV} \cdot P_{ST}$

where:

$P_{SL} = 1 - P_{Sf} - P_{Sa}$ = Probability the damage will extend into the longitudinal zone bounded by X_a and X_f

$P_{SV} = 1 - P_{Su} - P_{Sl}$ = Probability the damage will extend into the vertical zone bounded by Z_l and Z_u and

$P_{ST} = 1 - P_{Sy}$ = Probability the damage will extend transversely beyond the boundary defined by y.

(ii) P_{Sa}, P_{Sf}, P_{Sl}, P_{Su} and P_{Sy} shall be determined by linear interpolation from the table of probabilities for side damage provided in 2A.2.1(g)(iii),

where:

P_{Sa} = The probability the damage will lie entirely aft of location X_a/L.

P_{Sf} = The probability the damage will lie entirely forward of location X_f/L.

P_{Sl} = The probability the damage will lie entirely below the tank.

P_{Su} = The probability the damage will lie entirely above the tank and

P_{Sy} = The probability the damage will lie entirely outboard of the tank.

Compartment boundaries X_a, X_f, Z_l, Z_u and y shall be developed as follows:

X_a = The longitudinal distance from the aft terminal of L to the aftmost point on the compartment being considered, in m.

X_f = The longitudinal distance from the aft terminal of L to the foremost point on the compartment being considered, in m.

Z_l = The vertical distance from the moulded baseline to the lowest point on the compartment being considered, in m.

Z_u = The vertical distance from the moulded baseline to the highest point on the compartment being considered, in m. Z_u is not to be taken greater than D_S and

y = The minimum horizontal distance measured at right angles to the centreline between the compartment under consideration and the side shell in m.

(iii) Table of probabilities for side damage

P_{Sy} shall be calculated as follows:

$$P_{Sy} = \left(24.96 - \frac{199.6y}{B_S}\right)\left(\frac{y}{B_S}\right) \qquad \text{for} \quad \frac{y}{B_S} \le 0.05$$

$$P_{Sy} = 0.749 + \left[5 - 44.4\left(\frac{y}{B_S} - 0.05\right)\right]\left(\frac{y}{B_S} - 0.05\right) \qquad \text{for} \quad 0.05 < \frac{y}{B_S} < 0.1$$

$$P_{Sy} = 0.888 + 0.56\left(\frac{y}{B_S} - 0.1\right) \qquad \text{for} \quad \frac{y}{B_S} \ge 0.1$$

P_{Sy} shall not be taken greater than 1.

$\frac{X_a}{L}$	P_{Sa}	$\frac{X_f}{L}$	P_{Sf}	$\frac{Z_l}{D_S}$	P_{Sl}	$\frac{Z_u}{D_S}$	P_{Su}
0.00	0.000	0.00	0.967	0.00	0.000	0.00	0.968
0.05	0.023	0.05	0.917	0.05	0.000	0.05	0.952
0.10	0.068	0.10	0.867	0.10	0.001	0.10	0.931
0.15	0.117	0.15	0.817	0.15	0.003	0.15	0.905
0.20	0.167	0.20	0.767	0.20	0.007	0.20	0.873
0.25	0.217	0.25	0.717	0.25	0.013	0.25	0.836
0.30	0.267	0.30	0.667	0.30	0.021	0.30	0.789
0.35	0.317	0.35	0.617	0.35	0.034	0.35	0.733
0.40	0.367	0.40	0.567	0.40	0.055	0.40	0.670
0.45	0.417	0.45	0.517	0.45	0.085	0.45	0.599
0.50	0.467	0.50	0.467	0.50	0.123	0.50	0.525
0.55	0.517	0.55	0.417	0.55	0.172	0.55	0.452
0.60	0.567	0.60	0.367	0.60	0.226	0.60	0.383
0.65	0.617	0.65	0.317	0.65	0.285	0.65	0.317
0.70	0.667	0.70	0.267	0.70	0.347	0.70	0.225
0.75	0.717	0.75	0.217	0.75	0.413	0.75	0.197
0.80	0.767	0.80	0.167	0.80	0.482	0.80	0.143
0.85	0.817	0.85	0.117	0.85	0.553	0.85	0.092
0.90	0.867	0.90	0.068	0.90	0.626	0.90	0.046
0.95	0.917	0.95	0.023	0.95	0.700	0.95	0.013
1.00	0.967	1.00	0.000	1.00	0.775	1.00	0.000

(h) The probability P_B of breaching a compartment from bottom damage shall be calculated as follows:

(i) $P_B = P_{BL} \cdot P_{BT} \cdot P_{BV}$

where:

$P_{BL} = 1 - P_{Bf} - P_{Ba}$ = Probability the damage will extend into the longitudinal zone bounded by X_a and X_f ;

$P_{BT} = 1 - P_{Bp} - P_{Bs}$ = Probability the damage will extend into the transverse zone bounded by Y_p and Y_s and

$P_{BV} = 1 - P_{Bz}$ = Probability the damage will extend vertically above the boundary defined by z.

(ii) P_{Ba}, P_{Bf}, P_{Bp}, P_{Bs} and P_{Bz} shall be determined by linear interpolation from the table of probabilities for bottom damage provided in 2A.2.1(h)(iii),

where:

P_{Ba} = The probability the damage will lie entirely aft of location X_a / L.
P_{Bf} = The probability the damage will lie entirely forward of location X_f / L.
P_{Bp} = The probability the damage will lie entirely to port of the tank.
P_{Bs} = The probability the damage will lie entirely to starboard of the tank; and
P_{Bz} = The probability the damage will lie entirely below the tank.

Compartment boundaries X_a, X_f, Y_p, Y_s and z shall be developed as follows:

X_a and X_f are as defined in 2A.2.1(g)(ii);

Y_p = The transverse distance from the port-most point on the compartment located at or below the waterline d_B, to a vertical plane located $B_B/2$ to starboard of the ship's centreline, in m.
Y_s = the transverse distance from the starboard-most point on the compartment located at or below the waterline d_B, to a vertical plane located $B_B/2$ to starboard of the ship's centreline, in m and
z = the minimum value of z over the length of the compartment, where, at any given longitudinal location, z is the vertical distance from the lower point of the bottom shell at that longitudinal location to the lower point of the compartment at that longitudinal location, in m.

(iii) Table of probabilities for bottom damage

$\frac{X_a}{L}$	P_{Ba}	$\frac{X_f}{L}$	P_{Bf}	$\frac{Y_P}{B_B}$	P_{Bp}	$\frac{Y_S}{B_B}$	P_{Bs}
0.00	0.000	0.00	0.969	0.00	0.844	0.00	0.000
0.05	0.002	0.05	0.953	0.05	0.794	0.05	0.009
0.10	0.008	0.10	0.936	0.10	0.744	0.10	0.032
0.15	0.017	0.15	0.916	0.15	0.694	0.15	0.063
0.20	0.029	0.20	0.894	0.20	0.644	0.20	0.097
0.25	0.042	0.25	0.870	0.25	0.594	0.25	0.133
0.30	0.058	0.30	0.842	0.30	0.544	0.30	0.171
0.35	0.076	0.35	0.810	0.35	0.494	0.35	0.211
0.40	0.096	0.40	0.775	0.40	0.444	0.40	0.253
0.45	0.119	0.45	0.734	0.45	0.394	0.45	0.297
0.50	0.143	0.50	0.687	0.50	0.344	0.50	0.344
0.55	0.171	0.55	0.630	0.55	0.297	0.55	0.394
0.60	0.203	0.60	0.563	0.60	0.253	0.60	0.444
0.65	0.242	0.65	0.489	0.65	0.211	0.65	0.494
0.70	0.289	0.70	0.413	0.70	0.171	0.70	0.544
0.75	0.344	0.75	0.333	0.75	0.133	0.75	0.594
0.80	0.409	0.80	0.252	0.80	0.097	0.80	0.644
0.85	0.482	0.85	0.170	0.85	0.063	0.85	0.694
0.90	0.565	0.90	0.089	0.90	0.032	0.90	0.744
0.95	0.658	0.95	0.026	0.95	0.009	0.95	0.794
1.00	0.761	1.00	0.000	1.00	0.000	1.00	0.844

P_{Bz} shall be calculated as follows:

$$P_{Bz} = \left(14.5 - \frac{67z}{D_S}\right)\left(\frac{z}{D_S}\right) \qquad \text{for } \frac{z}{D_S} \le 0.1$$

$$P_{Bz} = 0.78 + 1.1\left(\frac{z}{D_S} - 0.1\right) \qquad \text{for } \frac{z}{D_S} > 0.1$$

P_{Bz} shall not be taken greater than 1.

(i) The following provisions regarding piping arrangements shall apply:

(i) Lines of piping which run through cargo tanks in a position less than $0.3B_S$ from the ship's side or less than $0.3D_S$ from the ship's bottom are to be fitted with valves or similar closing devices at the point at which they open into any cargo tank. These valves shall be kept closed at sea at any time when the tanks contain cargo oil, except that they may be opened only for cargo transfer needed for essential cargo operations.

(ii) Credit for reducing oil outflow through the use of an emergency rapid cargo transfer system or other system arranged to mitigate oil outflow in the event of an accident may be taken into account only after the effectiveness and safety aspects of the system are approved by the Society.

2A.2.2 Subdivisions and stability

(a) Every oil tanker is to comply with the subdivision and damage stability criteria as specified in 2A.2.2(c) after the assumed side or bottom damage as specified in 2A.2.2(b), for any operating draught reflecting actual partial or full load conditions consistent with trim and strength of the ship as well as specific gravities of the cargo. Such damage is to be applied to all conceivable locations along the length of the ship as shown in the following (i) to (iii):

(i) In tankers of more than 225 m in length, anywhere in the ship's length.

(ii) In tankers of more than 150 m, but not exceeding 225 m in length, anywhere in the ship's length except involving either after or forward bulkhead bounding the machinery space located aft. The machinery space is to be treated as a single floodable compartment.

(iii) In tankers not exceeding 150 m in length, anywhere in the ship's length between adjacent transverse bulkheads with the exception of the machinery space. For tankers of 100 m or less in length where all requirements in 2A.2.2(c) cannot be fulfilled without materially impairing the operational qualities of the ship, the Society may allow relaxations from these requirements. Ballast conditions where the tanker is not carrying oil (excluding oil residues) in cargo tanks, is not to be considered.

(b) The following requirements regarding the extent and the character of the assumed damage are to apply:

(i) The extent of side damage is to be as shown in Table III 2A-3.

(ii) The extent of bottom damage is to be as shown in Table III 2A-4.

Table III 2A-3
Extent of Side Damage

Direction	Extent of damage
Longitudinal extent	$\frac{1}{3}L_f^{\frac{2}{3}}$ or 14.5m, whichever is less
Transverse extent	B/5 or 11.5 m, whichever is less (inboard from the ship's side at right angles to the centreline at the level of the summer load line)
Vertical extent	From the moulded line of the bottom shell plating at centreline, upwards without limit

Table III 2A-4
Extent of Bottom Damage

Direction	Extent of damage	
	For 0.3 L_f from the forward perpendicular of the ship	Any other part of the ship
Longitudinal extent	$\frac{1}{3}L_f^{\frac{2}{3}}$ or 14.5 m, whichever is less	$\frac{1}{3}L_f^{\frac{2}{3}}$ or 5 m, whichever is less
Transverse extent	B/6 or 10 m, whichever is less	B/6 or 5 m, whichever is less
Vertical extent	B/15 or 6 m, whichever is less, measured from the moulded line of the bottom shell plating at centreline	

(iii) If any damage of lesser extent than the maximum extents of damage specified in (i) and (ii) result in a more severe condition, such damage is to be assumed.

(iv) Where the damage involving transverse bulkheads is envisaged as specified in 2A.2.2(a)(i) and (ii), transverse watertight bulkheads are to be spaced at least at a distance equal to the longitudinal extent of assumed damage specified in (i) in order to be considered effective. Where transverse bulkheads are spaced at a lesser distance one or more of these bulkheads within such extent of damage are to be assumed as non-existent for the purpose of determining flooded compartments.

(v) Where the damage between adjacent watertight bulkheads is envisaged as specified in 2A.2.2(a)(iii), no main transverse bulkhead or a transverse bulkhead bounding side tanks or double bottom tanks are to be assumed damaged, unless:

(1) the spacing of the adjacent bulkheads is less than the longitudinal extent of assumed damage specified in (i); or

(2) there is a step or a recess in a transverse bulkhead of more than 3.05 m in length, located within the extent of penetration of assumed damage. The step formed by the after peak bulkhead and after peak tank top is not to be regarded as a step for the purpose of the requirements of 2A.2.2.

(vi) If pipes, ducts or tunnels are situated within the assumed extent of damage, arrangements are to be made so that progressive flooding cannot thereby extend to compartments other than those assumed to be floodable for each case of damage.

(c) Oil tankers are to be regarded as complying with the damage stability criteria of the following requirements as shown (i) to (v) are met:

(i) The final waterline, taking into account sinkage, heel and trim, are to be below the lower edge of any opening through which progressive flooding may take place. Such openings are to include air pipes and those which are closed by means of weathertight doors or hatch covers and may exclude those openings closed by means of watertight manhole covers and flush scuttles, small watertight cargo tank hatch covers which maintain the high integrity of the deck, remotely operated watertight sliding doors, and side scuttles of the non-opening type.

(ii) In the final stage of flooding, the angle of heel due to unsymmetrical flooding is not to exceed 25 degrees, provided that this angle may be increased up to 30 degrees if no deck edge immersion occurs.

(iii) It may be regarded as sufficient if the righting lever curve has at least a range of 20 degrees beyond the position of equilibrium in association with a maximum residual righting lever of at least 0.1 m within the 20 degrees range. The area within this range below the curve is to be 0.0175 m-radian or more. Except for the case in which the relevant compartments are assumed flooded, unprotected openings are to be assumed not to immerse. Within this range, all openings listed in (i) and other openings which can be closed with a weathertight cover may be accepted by the Society.

(iv) It is to be satisfied that the stability is sufficient during intermediate stages of flooding.

(v) Even in cases where an equalizing system requiring the mechanical aid such as valves or inter-connecting pipes for the purpose of reducing the heel angle or of acquiring the minimum residual stability are provided for complying with the requirements in (i) to (iii), such provisions are not to be taken into account, and sufficient residual stability is to be maintained in all stages of service of the equalizing system. Compartments connected through ducts with a large sectional area may be considered to be common.

(d) The requirements in the preceding (a) above are to be confirmed by calculations which take into consideration the design characteristics of the ship, the arrangements, configuration and contents of the damaged compartments; and the distribution, specific gravities and the free surface effect of liquids. The calculations are to be based on the following requirements (i) through (v):

(i) Account is to be taken of any empty or partially filled tanks, the specific gravity of cargoes carried as well as any outflow of liquids from damaged compartments.

(ii) The permeabilities are to be assumed as given in Table III 2A-5.

(iii) The buoyancy of any superstructure directly above the side damage is to be disregarded.

Table III 2A-5
Permeabilities

Spaces	Permeability
Appropriated to stores	0.60
Occupied by accommodation	0.95
Occupied by machinery	0.85
Voids	0.95
Intended for consumable liquids	0 - 0.95*
Intended for other liquids	0 - 0.95*

*The permeability of partially filled compartment is to be consistent with the amount of liquid carried in the compartment. Whenever damage extends to any tank carrying liquid, it is to be assumed that the content totally flows out of the compartment and is replaced by salt water up to the level of final plane of equilibrium.

The unflooded parts of superstructure beyond the extent of damage, however, may be taken into consideration provided that they are separated from the damaged space by watertight bulkheads and the requirements in the preceding 2A.2.2(c)(i) in respect of these intact spaces are complied with. Hinged watertight doors may be acceptable in watertight bulkheads in the superstructure.

(iv) The free surface effect is to be calculated at an angle of heel of 5 degrees for each individual compartment. The Society may require or allow the free surface corrections to be calculated at an angle of heel greater than 5 degrees for partially filled tanks.

(v) In calculating the effect of free surface of consumable liquids it is to be assumed that, for each type of liquid at least one transverse pair or a single centerline tank has a free surface and the tank or combination of tanks to be taken into account is to be those where the effect of free surface is the greatest.

(e) Every oil tanker to which the requirements in this chapter applied is to be provided with the following (i) and (ii):

(i) Information relative to loading and distribution of cargo necessary to ensure compliance with the requirements of 2A.2.2; and

(ii) Data on the ability of the ship to comply with damage stability criteria as determined by 2A.2.2, including the effect of relaxations that have been allowed under the preceding 2A.2.2(a)(iii).

2A.2.3 Segregated ballast tanks

Every crude oil tanker of 20,000 tons deadweight and over and product carrier of 30,000 tons deadweight and over are to be provided with segregated ballast tanks of the following capacities and arrangements. However, it is no need to comply with the provisions of following requirements in (b) where the paragraph 2A.2.4 is applied:

(a) The capacity of the segregated ballast tanks in all cases of ballast conditions including the light weight plus segregated ballast only are to be such that the ship’s draughts and trim can meet each of the following requirements (i) to (iii). However, the segregated ballast conditions for oil tankers less than 150 m in length are to be the satisfaction of the Society.

(i) the moulded draught amidships (d_m), in m, (with-out taking into account any ship's deformation) is to be not less than:

$$2.0 + 0.02L_f$$

(ii) the draughts at the forward and after perpendiculars are to correspond to those determined by the draught amidships (d_m) as specified in (i) of this paragraph, in association with the trim by the stern of not greater than 0.015L: and

(iii) in any case the draught at the after perpendicular is not to be less than that which is necessary to obtain full immersion of the propeller(s).

(b) The segregated ballast tanks situated within the cargo oil spaces are to meet the following requirements (i) to (iii) to provide a measure of protection against oil outflow in the event of grounding or collision:

(i) The segregated ballast tanks and enclosed spaces other than cargo oil tanks within the cargo tank length (L_t) are to be so arranged as to comply with the following requirements:

$$\Sigma PA_c + \Sigma PA_s \geq J[L_t(B + 2D)]$$

where:

PA_c = The side shell area, in m^2, for each segregated ballast tank or space other than an oil tank based on projected moulded dimensions,

PA_s = The bottom shell area, in m^2, for each such tank or space based on projected moulded dimensions,

L_t = Length, in m, between the forward and after extremities of the cargo tanks,

D = Moulded depth, in m, measured vertically from the top of the keel to the top of the freeboard deck beam at side amidships. In ships having rounded gunwales, the moulded depth is to be measured to the point of intersection of the moulded lines of the deck and side shell plating, the lines extending as though the gunwale were of angular design,

J = 0.45 for oil tankers of 20,000 tons deadweight, 0.30 for oil tankers of 200,000 tons deadweight and above, subject to the provisions of paragraph (ii) of this regulation.

For intermediate values of deadweight the value of J are to be determined by linear interpolation.

(ii) For oil tankers of 200,000 tons deadweight and over, the value of J may be reduced as follows:

$$J_{reduced} = \left[J - \left(a - \frac{O_c + O_s}{4O_A}\right)\right] \text{ or } 0.2, \text{whichever is the greater}$$

where:

a = 0.25 for oil tankers of 200,000 tons dead-weight;
= 0.40 for oil tankers of 300,000 tons dead-weight;
= 0.50 for oil tankers of 420,000 tons dead-weight and above.

For oil tankers of intermediate dead-weight tonnage between the above, the value of a is to be determined by linear interpolation.

O_c and O_s = The values specified in 2A.2.1 (b).

O_A = Allowable oil outflow as required in 2A.2.1 (c).

In the determination of PA_c and PA_s for segregated ballast tanks and enclosed spaces other than cargo oil tanks, the requirements into following (1) and (2) are to be complied with:

(1) The width of a full-depth wing tank, or space either of which extends from the deck to the top of double bottom is not to be less than 2 m. The width of a wing tank or other enclosed space is to be measured inboard from the ship side at right angles to the centerline of the ship. Any wing tank or other enclosed space with the minimum width of less than 2 m is not to be considered in determining PA_c.

(2) The minimum vertical depth of each double bottom tank or other enclosed space is not to be less than B/15 or 2 m, whichever is less. Double bottom tanks or other enclosed spaces with the minimum depth of less than the above value are not considered in determining PA_s.

The minimum width and minimum depth of wing tanks or double bottom tanks are to be measured clear of the bilge area and, in the case of minimum width, are to be measured clear of any rounded gunwale area.

2A.2.4 Prevention of oil pollution in the event of collision or stranding

(a) Every oil tanker of 5,000 tons deadweight and above is to comply with any one of the following requirements (i) to (iii):

(i) The entire cargo tank length is to be protected by ballast tanks or spaces other than cargo and fuel oil tanks as follows:

(1) Wing tanks or spaces are to extend either for the full depth of the ship's side or from the top of the double bottom to the uppermost deck, disregarding a rounded gunwale where fitted. They are to be arranged such that the cargo tanks are located inboard of the moulded line of the side shell plating, nowhere less than the distance *w* which, as shown in Fig. III 2A-1, is measured at any cross-section at right angles to the side shell, as specified below:

$$w = 0.5 + \frac{DW}{20{,}000} \text{ or } 2.0\text{m, whichever is the lesser.}$$

where:
DW = Dead weight.
However, the minimum value of w = 1.0 m.

(2) At any cross-section the depth of each double bottom tank or space is to be such that the distance h between the bottom of the cargo tanks and the moulded line of the bottom shell plating measured at right angles to the bottom shell plating as shown in Fig. III 2A-1 is not less than specified below:

h = B/15 or 2.0 m, whichever is the lesser.

However, the minimum value of h = 1.0 m.

(3) When the distances h and w are different at turn of the bilge area or at locations without a clearly defined turn of the bilge, the distance w is to have preference at levels exceeding 1.5 h above the base line as shown in Fig. III 2A-1.

(4) On crude oil tankers of 20,000 tons deadweight and above and product carriers of 30,000 tons deadweight and above, the aggregate capacity of wing tanks, double bottom tanks, forepeak tanks and after peak tanks are not to be less than the capacity of segregated ballast tanks necessary to meet the requirements of 2A.2.3(a). Wing tanks or spaces and double bottom tanks used to meet the requirements of 2A.2.3(a) are to be located as uniformly as practicable along the cargo tank length. Additional segregated ballast capacity provided for reducing longitudinal hull girder bending stress, trim, etc., may be located anywhere within the ship.

(5) Suction wells in cargo tanks may protrude into the double bottom below the boundary line defined by the distance h provided that such wells are as small as practicable and the distance between the well bottom and bottom shell plating is not to be less than 0.5h.

(6) Ballast piping and other piping such as sounding and vent piping to ballast tanks are not to pass through cargo tanks. Cargo piping and similar piping to cargo tanks are not to pass through ballast tanks. Exemptions to this requirement may be granted for short lengths of piping, provided that they are completely welded or equivalent.

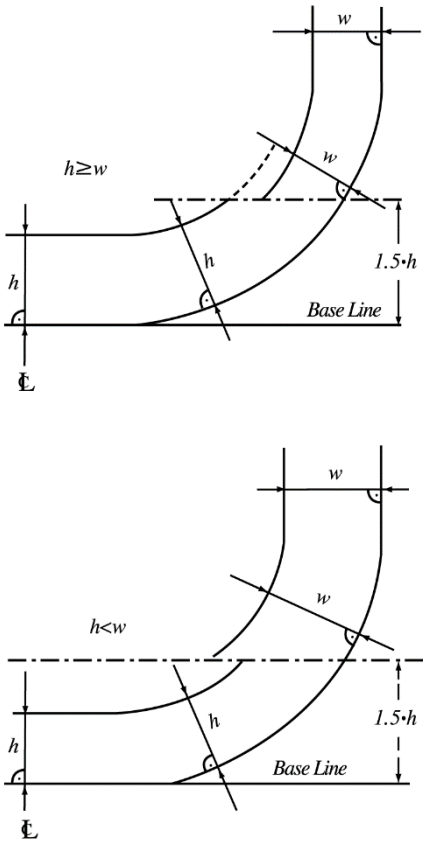

Fig. III 2A-1
Cargo Tank Boundary Lines

(ii) Double bottom tanks or spaces as required by paragraph 2A.2.4(a)(i)(2) may be dispensed with, provided that the entire cargo tank length is to be protected by mid-deck plating, ballast tanks or spaces other than cargo and fuel oil tanks as follows:

(1) The cargo and vapour pressure exerted on the bottom shell plating forming a single boundary between the cargo and the sea is not to exceed the external hydrostatic water pressure as expressed by the following formula:

$$f \cdot h_c \cdot \rho_c \cdot g + 100 \cdot \Delta P \leq d_n \cdot \rho_s \cdot g$$

where:

h_c = Height of cargo in contact with the bottom shell plating, in m.
ρ_c = Maximum cargo density in t/m^3.
d_n = Minimum operating draught under any expected loading condition, in m.
ρ_s = Density of sea water in t/m^3.
ΔP = Maximum set pressure of pressure/ vacuum valve provided for the cargo tank in bars.
f = 1.1 , safety factor
g = 9.81 m/sec^2, standard acceleration of gravity

(2) Any horizontal partition necessary to fulfill the above requirements is to be located at a height of not less than B/6 or 6 m, whichever is the lesser, but not more than 0.6 D, above the base line where D is the moulded depth amidships.

(3) The location of wing tanks or spaces is to be as defined in 2A.2.4(a)(i)(1) except that, below a level 1.5 h above the baseline where h is as defined in 2A.2.4(a)(i)(2), the cargo tank boundary line may be vertical down to the bottom plating, as shown in Fig. III 2A-2.

(4) On crude oil tankers of 20,000 tons deadweight and above and product carriers of 30,000 tons deadweight and above, the aggregate capacity of wing tanks, forepeak tanks and afterpeak tanks are to be comply with the requirements of 2A.2.4(a)(i)(4).

(5) Ballast piping and cargo piping are to be comply with the requirements of 2A.2.4(a)(i)(6).

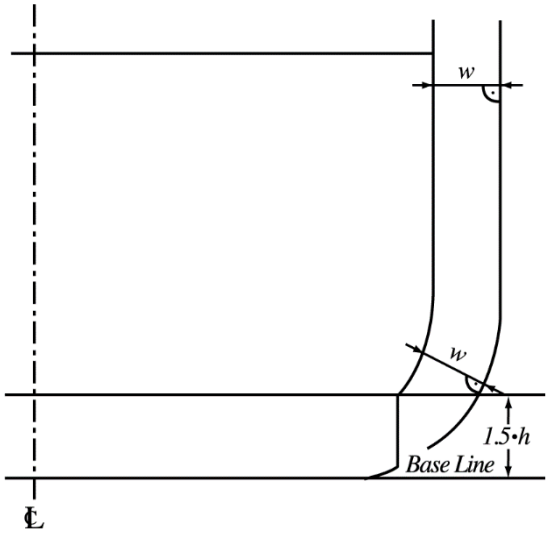

Fig. III 2A-2
Cargo Tank Boundary Lines

Table III 2A-6
Extent of Bottom Raking Damage

Direction	Extent of damage
Longitudinal extent	Ships of 75,000 tons deadweight and above: 0.6 L_f measured from the forward perpendicular
	Ships of less than 75,000 tons deadweight: 0.4 L_f measured from the forward perpendicular
Transverse extent	B/3 anywhere in the bottom
Vertical extent	Breach of the outer hull.

(iii) Other methods of design and construction of oil tankers may be accepted as alternatives to the requirements prescribed in 2A.2.4(a)(i), provided that such methods ensure at least the same level of protection against oil pollution in the event of collision or stranding by the Society.

(b) For oil tankers of 20,000 tons deadweight and above, the damage assumptions prescribed in 2A.2.2(b)(ii) are to be supplemented by the assumed bottom raking damage in accordance with Table III 2A-6.

(c) Oil tankers of less than 5,000 tons deadweight are to comply with the following requirements (i) and (ii):

(i) Double bottom tanks or spaces in accordance with 2A.2.4(a)(i)(2) are to be arranged along the entire cargo tank length. However, the distance h specified in 2A.2.4(a)(i)(2) may comply with the following:

$h = B/15$ m

However, the minimum value of h = 0.76 m in the turn of the bilge area and at locations without a clearly defined turn of the bilge, the cargo tank boundary line is to run parallel to the line of the mid-ship flat bottom as shown in Fig. III 2A-3.

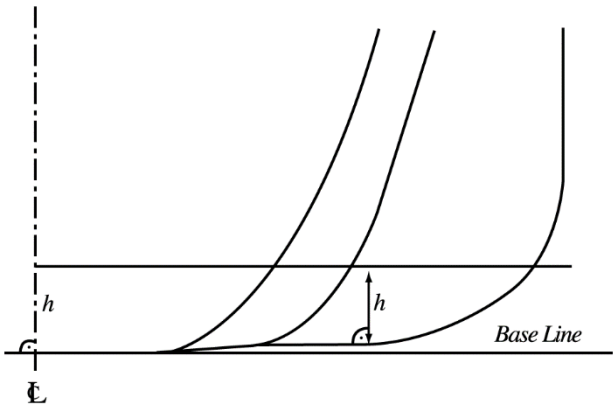

Fig. III 2A-3
Cargo Tank Boundary Lines

(ii) The capacity of each cargo tanks is not to exceed 700 m^3 unless wing tanks or spaces in accordance with 2A.2.4(a)(i)(1) are arranged along the entire cargo tank length. However, the distance w specified in 2A.2.4(a)(i)(1) is to comply with the following:

$$w = 0.4 + \frac{2.4DW}{20,000} \quad \text{m}$$

where:

DW = Dead weight.
However, the minimum value of w = 0.76 m.

(d) Oil is not to be carried in any space extending forward of a collision bulkhead located in accordance with 14.1.1(a) of Part II. An oil tanker other than the above is not to carry oil in any space extending forward of the transverse plan perpendicular to the centerline that is located as if it were a collision bulkhead located in accordance with that requirement.

2A.3 Location and Separation

2A.3.1 In cargo oil spaces, the standard arrangement of bulkheads is to be such that the interval between longitudinal bulkheads or transverse bulkheads does not exceed $1.2\sqrt{L}$, in m.

2A.3.2 Cofferdams are to be provided in accordance with followings:

(a) Cofferdams of air-tight construction with a sufficient width for access are to be provided at fore and aft terminations of cargo oil spaces and the space between cargo space and accommodation space.

(b) Cofferdams specified in (a) may be used as pump rooms.

(c) Fuel oil or ballast water tanks may be concurrently used as the cofferdams to be provided between cargo oil tanks and fuel oil or ballast water tanks, subject to the approval by the Society.

2A.3.3 Passageways leading to cargo areas are to be provided in accordance with followings:

(a) Access to cofferdams, ballast tanks, cargo oil tanks and other spaces in the cargo area are to be direct from the open deck and such as to ensure their complete inspection. Access to double bottom spaces may be through a cargo pump room, pump room, deep cofferdam, pipe tunnel or similar compartments, subject to consideration of ventilation aspect.

(b) For access through horizontal openings, hatches or manholes, the dimensions are to be sufficient to allow a person wearing a self-contained air breathing apparatus and protective equipment to ascend or descend any ladder without obstruction and also to provide a clear opening to facilitate the hoisting of an injured person from the bottom of the space. The minimum clear opening is 600 mm × 600 mm.

(c) For access through vertical openings, or man-holes providing passage through the length and breadth of the space, the minimum clear opening is to be 600 mm × 800 mm at a height of not more than 600 mm, unless gratings or other footholds are provided.

(d) For tankers of 5,000 tons deadweight and above, smaller dimensions of clear opening specified in (b) and (c) may be approved by the Society in special circumstances, if the ability to traverse such openings or to remove an injured person can be proved to the satisfaction of the Society.

(e) Access to pipe tunnels or duct keels

Where a pipe tunnel or duct keel is fitted, and access is normally required for operational purposes, provision is to be made for at least two exits to the open deck arranged at a maximum distance from each other. Access is not to be via the engine room. Where there is permanent access from a pipe tunnel to the pump room, a watertight door is to be fitted complying with the requirements of 14.3 of Part II of the Rules, and in addition with the following requirements:

(i) In addition to bridge operation, the watertight door is to be capable of being manually closed from outside the main pump-room entrance.

(ii) The watertight door shall be kept closed during normal operations of the ship except when access to the pipe tunnel is required.

Mechanical ventilation is to be provided and such spaces are to be adequately ventilated prior to entry. A notice-board is to be fitted at each entrance to the pipe tunnel stating that before any attempt is made to enter, the ventilating fan must have been in operation for an adequate period. In addition, the atmosphere in the tunnel is to be sampled by a reliable gas monitor, and where an inert gas system is fitted in cargo tanks, an oxygen monitor is to be provided. The suitable lighting system in pipe tunnels or duct keels is to be considered.

2A.3.4 All areas, where cargo oil pumps and cargo oil piping are provided, are to be segregated by an air-tight bulkhead from areas where boilers, propelling machinery, electric installations other than those of explosion-proof type or machinery where source of ignition is normally present.

2A.3.5 Ventilation inlets and outlets are to be arranged so as to minimize the possibilities of vapours of cargoes being admitted to an enclosed space containing a source of ignition, or collecting in the vicinity of deck machinery and equipment which may constitute an ignition hazard. Especially, openings of ventilation for machinery spaces are to be situated as far afterwards apart from the cargo spaces as practicable.

2A.3.6 Ullage openings, sight port and tank cleaning openings are not to be arranged in enclosed spaces.

2A.3.7 The arrangement of openings on the boundaries of superstructures and deck-houses are to be such as to minimize the possibility of accumulation of vapours of cargoes. Due consideration in this regards is to be given for the openings in superstructures and deck-houses when the ship is equipped with cargo piping to load or unload at the stern.

2A.3.8 Where long tanks or wide tanks are fitted, nontight bulkheads are to be provided to prevent excessive sloshing pressure form internal liquid cargo. Alternatively, reinforcements to the bulkheads and decks without fitting of nontight bulkheads may be determined by an acceptable engineering method.

2A.4 Minimum Thickness

2A.4.1 The thickness of structural members in cargo oil tanks and deep tanks such as bulkheads plating, floors, girders, including struts and their end brackets is not to be less than:

t = 8.0	mm	for $L \leq 105$ m
t = 11.5	mm	for L = 210 m
t = 13.5	mm	for $L \geq 375$ m

for L between 105 m and 210 m or between 210 m and 375 m, t is to be obtained by interpolation.

2A.4.2 The thickness of structural members other than 2A.4.1 in cargo oil tanks and deep tanks is not to be less than 7 mm.

2A.5 Direct Strength Calculation

2A.5.1 Notwithstanding the requirements in this Chapter, scantling of structural members may be determined based on direct strength calculation. Where, however, this is not to be applied to the minimum thickness of plating specified in 2A.4 and the special requirements for corrosion specified in 2A.10.5, 2A.10.6 and 2A.10.7.

2A.5.2 A three dimension stress analysis may be required, if deemed necessary, to carry out the load sharing effects of girders and transverses from the forces combination by internal tank loadings and external sea pressure etc.

2A.6 Bulkhead Plating

2A.6.1 "Bulkhead plating" referred to in this Chapter means those plate members used in the boundaries of cargo oil tanks and deep tanks where longitudinal bulkheads, transverse bulkheads, deck plates, side shell and inner bottom plates are included.

(a) The thickness t of bulkhead plating is not to be less than the greatest of the values obtained from the following formula when h is substituted with h_1, h_2 and h_3.

$$t = C_1 C_2 S\sqrt{h} + 3.5 \qquad \text{mm}$$

where:

S = Spacing of stiffeners, in m

h = The following h_1, h_2 and h_3:

h_1 = Vertical distance from the lower edge of the plating under consideration to the top of hatchway.

h_2 = As obtained from the following formula:

= $0.85\,(h_1 + \Delta h)$

Δh = Additional water head given by the following formula:

$$= \frac{16}{L}(l_t - 10) + 0.25(b_t - 10) \qquad \text{m}$$

l_t = Tank length, in m, take 10, when less than 10 m.

b_t = Tank breadth, in m, take 10, when less than 10 m.

h_3 = For oil tank obtained from the following formula:

= $0.3\sqrt{L}$

For deep tank, as obtained by multiplying 0.7 by vertical distance from the lower edge of the bulkhead plating under consideration to the point 2.0 m above the top of overflow pipe.

C_1 = Coefficients determined according to values of L as specified below:

C_1 = 1.0 where $L \le 230$ m

C_1 = 1.07 where $L \ge 400$ m

For intermediate values of L, C_1 are to be obtained by linear interpolation.

C_2 = $3.6\sqrt{K}$, however, C_2 for h_1 is to be obtained by the following formulae according to the type of bulkhead and stiffening system:

In the case of longitudinal bulkheads of longitudinal system,

$$C_2 = 13.4\sqrt{\frac{K}{27.7 - \alpha K}}$$

Where, however, value of C_2 are not to be less than $3.6\sqrt{K}$.

In the case of longitudinal bulkheads of transverse system,

$$C_2 = 100\sqrt{\frac{K}{767 - \alpha^2 K^2}}$$

K = Coefficient corresponding to material strength, and is to be as given below:

= 1 for MS

= 0.78 for HT32

= 0.72 for HT36

= 0.69 for HT40

α = Either α_1 or α_2 according to value of y. However, value of α are not to be less than α_3

when $y_B < y$

$\alpha_1 = 15.5 f_D \frac{(y - y_B)}{y_O}$

when $y \le y_B$

$\alpha_2 = 15.5 f_B \left(1 - \frac{y}{y_B}\right)$

$\alpha_3 = \beta \left(1 - \frac{2b}{B}\right)$

f_D, f_B = Ratios of section modulus of athwartship section on the basis of mild steel in accordance with the requirements of Chapter 3 in Part II of the Rules to actual section modulus of athwartship section concerning the strength deck and bottom.

y = Vertical distance from the top of keel to the lower edge of the bulkhead plating under consideration, in m.

y_B = Vertical distance from the top keel amidship to the horizontal neutral axis of the athwartship section of the hull, in m.

y_O = The greater of the value specified in 3.2.5 (e), (i) or (ii), Part II of the Rules.

β = Coefficient given by the following formulae. For the intermediate values of L, β is to be obtained by linear interpolation.

$= \frac{6}{a}$ where $L \le 230m$

$= \frac{10.5}{a}$ where $L \ge 400m$

a = $\sqrt{K}$ when high tensile steels are used for not less than 80% of side shell plating at the athwartship section amidships, and 1.0 for other parts.

b = Horizontal distance from side shell plating to the outer end of the bulkhead plating under consideration, in m.

B = Moulded breadth of ship, in m.

(b) In determining the thickness of plating, coefficient C_2 for h_1 may be gradually reduced for the parts forward and afterward the midship part, and it may take as $3.6\sqrt{K}$ in calculations at 0.1 L from fore end and aft end.

2A.6.2 Swash bulkheads

(a) Stiffeners and girders of swash bulkhead are to be of sufficient strength considering the size of tanks and opening ratios.

(b) The thickness of swash bulkhead plating is not to be less than that obtained from the following formula:

$t = 0.3S\sqrt{L + 150} + 3.5$ mm

where:
S = Spacing of stiffeners, in m.

(c) In determining the thickness of swash bulkhead plating, sufficient consideration is to be given to buckling.

2A.6.3 Trunk

The thicknesses of trunk top and side plating are to be determined applying the requirements of 2A.6.1 in addition to the requirements in Chapter 11 of Part II.

2A.7 Longitudinals and Stiffeners

2A.7.1 Longitudinals

(a) The section modulus of bottom longitudinals is not to be less than the value obtained from the following formula:

$Z = 100C_1C_2Shl^2$ cm^3

where:

l = Spacing of girders, in m.
S = Spacing of longitudinals, in m.
h = Distance from the longitudinals under consideration to the following point above the top of keel, in m.
= d + 0.026L′
L′ = Length of ship, in m. Where, however, L exceed 230 m, L′ is to be taken as 230 m.
C_1 = As specified in 2A.6.1 (a).
C_2 = Coefficient given by the following formula:

$$= \frac{K}{24 - 15.5f_BK}$$

f_B and K = As specified in 2A.6.1 (a).

(b) The section modulus of side longitudinals including bilge longitudinals is not to be less than the value obtained from the following formula:

$Z = 100C_1C_2Shl^2$ cm^3

where:

l, S = As specified in (a).
h = Distance from the longitudinals under consideration to the following point above the top of keel, in m.
= d + 0.038 L′
L′ = As specified in (a).
C_1 = As specified in 2A.6.1 (a).
C_2 = Coefficient given by the following formula:

$$= \frac{K}{24 - \alpha K}$$

K = As specified in 2A.6.1 (a).
α = α_1 or α_2 as given below, whichever is greater.

$\alpha_1 = 15.5f_B\left(1 - \frac{y}{y_B}\right)$

f_B, y_B = As specified in 2A.6.1(a).
y = Vertical distance from the top of keel to the longitudinals under consideration, in m.

α_2 = Coefficient as given below, determined by values of L. For intermediate value of L, the value of α_2 is to be obtained by linear interpolation.

$= \frac{6}{a}$ where $L \leq 230$m

$= \frac{10.5}{a}$ where $L \geq 400$m

a = $\sqrt{K}$ when high tensile steels are used in the athwartship sections of the midship hull for 80% or more of side shell plating, and 1.0 for other cases.

The section modulus, however, need not exceed that of bottom longitudinals specified in (a), but is not to be less than the value obtained from the following formula:

$Z = 2.9K\sqrt{L}Sl^2$ cm^3

(c) For side longitudinals, sufficient consideration is to be given for fatigue strength.

(d) For the parts forward and afterward of the midship part, the scantlings of longitudinals may be gradually reduced and at the end parts they may reduced by 15% of the value obtained from the requirements in (a) and (b). In no case, however, are the scantlings of longitudinals to be less than required in (a) and (b) for the part between a point 0.15L from the fore end and the collision bulkhead.

2A.7.2 Bulkhead stiffeners in cargo oil tanks and deep tanks

(a) Section modulus of stiffeners is not to be less than the value obtained from the following formula:

$$Z = 125C_1C_2C_3Shl^2 \qquad cm^3$$

where:

S	=	Spacing of stiffeners, in m.
h	=	As specified in 2A.6.1(a). Where, however, "the lower edge of the bulkhead plating" is to be construed as "the mid-point of the stiffener" for vertical stiffeners, and as "the stiffener" for horizontal stiffeners.
l	=	Spacing of girders, in m.
C_1	=	As specified in 2A.6.1(a).
C_2	=	K/18, however C_2 for h_1 is to be obtained by the following formula according to the stiffening system:
	=	$\frac{K}{24-\alpha K}$ for the longitudinal system, however, in no case is the value of C_2 to be less than K/18.
	=	K/18, for the transverse system or transverse bulkheads.
α,K	=	As specified in 2A.6.1(a), however, "the lower edge of the bulkhead plating" and "the bulk head" are to be construed as "the stiffener" in applying the requirements for y and b.
C_3	=	As determined from Table III 2A-7 according to the fixity condition of stiffener ends.

(b) In determining the section modulus of stiffeners attached to bulkhead plating, coefficient C_2 for h_1 may be gradually reduced, and at the end parts, C_2 may be as K/18.

2A.7.3 Buckling strength

(a) Buckling strength of longitudinal frames, beams and stiffeners is to be in accordance with the requirements (i) to (iii) below.

(i) Longitudinal beams, side longitudinals attached to sheer strakes and longitudinal stiffeners attached to the longitudinal bulkhead within 0.1D from the strength deck are to have a slenderness ratio not exceeding 60 at the midship part as far as practicable.

(ii) As for flat bars used for longitudinal beams, frames and stiffeners, the ratio of depth to thickness is not to exceed 15.

(iii) The full width of face plates of longitudinal beams, frames and stiffeners is not to be less than that obtained from the following formula:

$$b = 69.6\sqrt{d_0 l} \qquad mm$$

where:

d_0	=	Depth of web of longitudinal beam, frame or stiffener, in m.
l	=	Spacing of girders, in m.

(b) In case where assembled members, special shape steels or flanged plates are used for frames, beams or stiffeners in cargo oil tanks and deep tanks whose scantlings are specified only in terms of section modulus, the thickness of web is not to be less than that obtained from the following formula. In case where, however, the depth of web is intended to be greater than the required level due to reasons other than strength, it may be suitably modified.

$t = 15K_0d_0 + 3.5$ mm

where:

d_0 = Depth of web, in m.

K_0 = As specified bellows:

$$K_0 = \sqrt{\frac{1}{4}\left(3f_B + \frac{1}{K}\right)} \text{ for bottom longitudinals located not more than 0.25D above top of keel,}$$

$$K_0 = \sqrt{\frac{1}{4}\left(3f_D + \frac{1}{K}\right)} \text{ for deck longitudinals located not more than 0.25D below deck,}$$

$$K_0 = \sqrt{\frac{1}{4}\left(3 + \frac{1}{K}\right)} \text{ for other structural members.}$$

f_B, f_D, K = As specified in 2A.6.1 (a).

Table III 2A-7
Value of C_3

Another end→ / One end↓	(1)	(2)	(3)	(4)
(1) Rigid fixity by bracket	0.70	1.15	0.85	1.30
(2) Soft fixity by bracket	1.15	0.85	1.30	1.15
(3) Supported by girders or lug-connection	0.85	1.30	1.00	1.50
(4) Snip	1.30	1.15	1.50	1.50

Notes:

(1) Rigid fixity by bracket means the fixity in the connection between the double bottom plating or comparable stiffeners within adjoining planes and brackets, or equivalent fixity.

(2) Soft fixity by bracket means the fixity in the connection between beams, frames, etc., which are crossing members, and brackets.

2A.8 Girders, Transverses and Cross Tie

2A.8.1 General

(a) The double bottom and double side hull structures and the arrangements and scantlings of girders in cargo oil spaces are to be based upon direct strength calculation and deemed appropriate by the Society.

(b) Notwithstanding the requirement in (a), the scantlings of girders may be determined in accordance with the requirements in 2A.8.2 to 2A.8.6 provided that the arrangements of girders in the double bottom, double side hull and cargo oil tank at cargo oil spaces are determined referring to the structural types shown in following (i) to (v) as the standard:

(i) The height of a double bottom at cargo oil spaces is not to be less than B/20, in m.

(ii) The width of a double side hull is not to be less than D/9, in m.

(iii) In double bottoms at cargo oil spaces, girders are to be provided at a spacing not exceeding $0.9\sqrt{l_T}$, and floors are to be provided at a spacing not exceeding $0.55\sqrt{B}$ (m) or $0.75\sqrt{D}$ (m), whichever is smaller. l_T is the length of a cargo hold, in m.

(iv) In double side hull, side stringers are to be provided at a spacing not exceeding $1.1\sqrt{l_T}$, in m.

(v) Transverses in double side hull, cargo oil tanks and deep tanks are to be provided in line with floors in double bottoms.

2A.8.2 Scantlings of girders and floors in double bottom.

The scantlings of girders and floors in double bottom are to be as deemed appropriate by the Society.

2A.8.3 Scantlings of stringers and transverses in double side hull

The scantling of stringers and transverses in double side hull are to be as deemed appropriate by the Society.

2A.8.4 Girders and transverses in cargo oil tanks and deep tanks.

(a) The section modulus Z of girders is not to be less than that obtained from the following formula:

$$Z = 7.13C_1KSh l_0^2 \qquad cm^3$$

where:

S = Width of the area supported by the girders, in m.

h = As specified in 2A.6.1 (a). Where, however, "from the lower edge of the bulkhead plating under consideration" is to be construed as "from the midpoint of S" for horizontal girders, and as "from the midpoint of l_0" for vertical girders in applying the value of h.

l_0 = Length of girders obtained from the following formula:

l_0 = kl, in m.

l = Total length of girders, in m, and if it is continuous with other girders and transverses, distance to the inner surface of face plates of the girder.

k = Correction factor for brackets, and to be as obtained from the following formula:

$$= 1 - \frac{0.65(b_1 + b_2)}{l}$$

b_1, b_2 = Arm length of brackets at respective ends of girders and transverses, in m.

K = As specified in 2A.6.1 (a).

C_1 = Coefficient determined by L as given below:

= 1.0, where L is not more than 230 m.

= 1.20, where L exceeds 400 m.

For intermediate value of L, to be obtained by linear interpolation.

(b) The moment of inertia of girders is not to be less than that obtained from the following formula. Additionally, in no case is the depth of girders to be less than 2.5 times the depth of slots.

$$I = 30h l_0^4 \qquad cm^4$$

where:

h, l_0 = As specified in (a).

(c) The thickness of girders is not to be less than the greatest of the following t_1, t_2 or t_3:

$$t_1 = 0.0417\frac{(C_1C_2Shl_0)}{d_1} + 3.5 \qquad mm$$

$$t_2 = 1.74\sqrt[3]{\frac{C_1 C_2 K S h l_0 S_1^2}{d_1}} + 3.5 \qquad \text{mm}$$

$$t_3 = 0.01 S_1 + 3.5 \qquad \text{mm}$$

where:

S, h, l_0, C_1 & K	=	As specified in (a).
S_1	=	Spacing of stiffeners of girders or the depth of girders, whichever is smaller, in m.
d_1	=	Depth of the girder under consideration, in m, subtracting the depth of openings.
C_2	=	Coefficient as obtained from the following formula:
		In no case is it to be less than 0.5:
C_2	=	$\left\lvert 1 - 2\frac{x}{l_0} \right\rvert$ for vertical girders,
	=	$\left\lvert 1 + \frac{1}{5}\frac{l_0}{h} - \left(2 + \frac{l_0}{h}\right)\frac{x}{l_0} + \frac{l_0}{h}\left(\frac{x}{l_0}\right)^2 \right\rvert$ for horizontal girders.
	x =	Distance from the end of l_0 to the sectional area under consideration, in m, and from the lower end of l_0 for vertical girders.

(d) Effective steel plates used for calculating actual moment of inertia of girders and section modulus are to be as specified in 1.6.3 of Part II. In case where, however, stiffeners are provided within the effective width, they may be included in the effective steel plates.

(e) The web thickness of transverse at the portion where cross ties are connected is not to be less than obtained from the following formula. Where slots are provided in the web at the portion where cross ties are connected, the slots are to be effectively covered with collar plates.

$$t = 16\sqrt{\frac{C_1 S b_s h_s}{A}} S_1 \qquad \text{mm}$$

where:

S	=	Spacing of transverses, in m.
b_s	=	Width supported by cross tie, in m.
h_s	=	Distance from mid-point of b_s to the following point above top of keel, in m:
	=	d+0.038L′
		L′ = As specified in 2A.7.1(a).
C_1	=	As specified in (a).
S_1	=	Spacing of stiffeners provided depth-wise on the web plates of transverses at the portion where cross ties are connected, in m.
A	=	Sectional area effective to support the axial force from cross tie (cm^2), which is to be taken as follows:

(i) Where the face plates of cross ties are continuous to the face plates of transverses in an arc form or a similar form, A is the total sum of the sectional area of the web plate of transverse at the portion between the contact points of tangents to the arc or similar curve making an angle of 45° to the direction of cross tie, that of the stiffener provided in the axial direction of cross tie on the web plate between the contact points, and 0.50 times that of the face plates at the contact points (See Fig. III 2A-4(a)).

(ii) Where the face plates of cross ties are continuous to the face plates of transverses in the form of straight line with rounded corners, A is the total sum of the sectional area of the web plate of transverse at the portion between the mid-points of the intersections of the extensions of the lines of inner surface of face plates of both cross tie and transverse with the lines making an angle of 45° to the direction of cross tie in contact with the inner surface plates at the transforming parts, that of the stiffener provided in the axial direction of cross tie on the web plate between the above-mentioned mid-points and 0.50 times that of the face plates at the mid-points (See Fig. III 2A-4(b)).

(iii) Where the face plates of cross ties are joined directly to the face plates of transverses with a right or nearly right angle and both face plates are connected with brackets and further, stiffeners are provided on the web plate of transverses on the extended lines of face plates of cross tie. A is the total sum of the sectional area of the web plate of transverse at the portion between the mid-points of the intersections of the extensions of lines of inner surface of face plates of both cross tie and transverse with the lines making an angle of 45° to the direction of cross tie in contact with the free edge lines of brackets, and that of the stiffeners provided as mentioned above (See Fig. III 2A-4(c)).

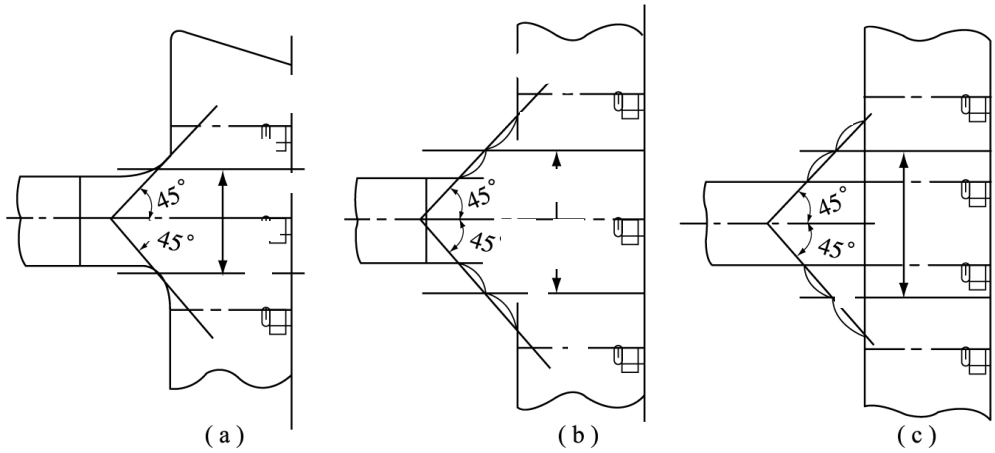

Fig. III 2A-4
Extent for Total Sectional Area

(f) The thickness of face plates forming a girder is to be greater than the thickness of web, and the total width is not to be less than that obtained from the following formula:

$85.4\sqrt{d_0 l}$ mm

where:
d_0 = Depth of girders, in m.
l = Distance between supporting points of girders, in m. Where, however, if effective tripping brackets are provided, they may be regarded as supporting points.

2A.8.5 Transverse of ships without double side hull

(a) In addition to the requirements in 2A.8.4, depth of side transverse d and section modulus of transverse Z are not to be less than that obtained from the following formulae:

$d = 0.15l$ m
$Z = 8.7KSh l_0^2$ cm^3

where:
l = Total length of side transverses, and if they are continuous with other transverses, distance to the inner surface of face plates of the transverses, in m.
l_0 = As given below;
= kl, in m.
k = As specified in 2A.8.4(a).
S = Spacing of transverses, in m.
h = Distance from mid-point of l_0 to the following point above top of keel, in m.
= d + 0.038L′

L′ = As specified in 2A.7.1(a).
K = As specified in 2A.6.1(a).

(b) The scantlings of deck transverses are to be as given in (i) and (ii) below:

(i) Section modulus Z of deck transverses of a ship without trunks is not to be less than that obtained from the following formula:

$$Z = 3KS\sqrt{L}\, l_0^2 \quad \text{cm}^3$$

where:
S, K, l_0 = As specified in (a).

(ii) For ships with trunks the construction of providing continuous deck transverses across the trunks is to be considered as the standard. In this case, the depth of the deck transverses that can be regarded as those supported by trunks may be 0.03B.

(c) For transverses provided on the centreline bulkhead, the requirements for side transverses specified in (a) are to be applied correspondingly. In no case, however, are the scantlings to be less than the value obtained by 0.8 times the coefficient in each formula.

2A.8.6 Stiffeners attached to girders in cargo oil tanks and deep tanks

The thickness of flat bar stiffeners and tripping brackets provided on girders and transverses, and stiffeners attached to bulkhead is not to be less than that obtained from the following formula. However, it needs not exceed the thickness of webs of the girder to which they are provided.

$$t = 0.5\sqrt{L} + 3.5 \quad \text{mm}$$

2A.8.7 Cross ties

(a) Cross ties in ships having two or more rows of longitudinal bulkheads, where they are effectively connected with longitudinal bulkhead transverses in cargo oil tanks are to be in accordance with this requirements.

(b) The sectional area of cross ties interconnecting longitudinal bulkhead transverses in cargo oil tanks is not to be less than that obtained from the following formula:

$$A = C_1C_2KSb_sh \quad \text{cm}^2$$

where:
S, b_s and C_1 = As specified in 2A.8.4(e).
h = Vertical distance from mid-point of b_s to top of hatch-ways of adjacent cargo oil tanks, in m.
K = As specified in 2A.6.1(a).
C_2 = Coefficient obtained from the following formula:

$$= \frac{0.77}{1 - 0.5\frac{l}{k}}$$ in no case, however, is it to be less than 1.1.

l = Length of cross ties between the inner surface of longitudinal bulkhead transverses, in m.
k = As given below:

$$= \sqrt{\frac{I}{A}} \quad \text{cm}$$

I = Moment of inertia of cross ties (cm^4).
A = Sectional area of cross ties (cm^2).

2A.9 Structural Details

2A.9.1 General

(a) The principal structural members are to be arranged so that continuity of strength can be secured throughout the cargo area. In forward and afterward parts of the cargo area, the structures are to be effectively strengthened so that continuity of strength is not impaired sharply.

(b) For the principal structural members, sufficient consideration is to be given for fixity at ends, supporting and stiffening systems against out-of-plan deflections, and the construction is to minimize local stress concentrations.

2A.9.2 Frames and stiffeners

Longitudinal beams, frames and stiffeners are to be of continuous structures, or to be connected securely so that their sectional areas at ends can be properly maintained and provide sufficient resistance against bending moments.

2A.9.3 Girders and cross ties

(a) Girders provided within the same plane are to be arranged to avoid sharp changes in strength and rigidity, and brackets in suitable size are to be provided at the ends of girders, and bracket toes are to be sufficiently rounded.

(b) In case where the depth of longitudinal girders is large, stiffeners are to be arranged in parallel with face plates.

(c) Transverses and vertical webs are to be provided with tripping brackets at the junctions with cross ties.

(d) Where the breadth of face plates forming cross ties exceeds 150 mm on one side of the web, stiffeners are to be provided at proper intervals to support the face plates as well.

(e) Tripping brackets are to be provided on the web plate transverses at the inner edge of end brackets and at the connecting part of cross ties, etc. and also at the proper intervals in order to support transverses effectively. In case where the width of face plates of each girder exceeds 180 mm on one side, the tripping brackets shown above are to support face places as well.

(f) Web for the upper and lower end brackets of side transverses and longitudinal bulkhead transverses and those in the vicinity of the roots of cross ties are to be stiffened specifically with closer spacing.

2A.10 Special Requirements for Corrosion

2A.10.1 Thickness of shell plating

(a) The thickness of shell plating forming casing of cargo oil tanks planned to carry ballast water, except the tank to carry ballast water only in heavy weather conditions, in ships without double side hull is not to be less than a thickness added with 0.5 mm to that obtained from the formula given in 2A.6.

(b) 0.5 mm may be reduced for the thickness of shell plating when applying the requirements of this Chapter from the thickness of shell plating when applying the requirements of this Chapter from the thickness obtained from the formula given in 2A.6.1.

2A.10.2 Thickness of deck plating

(a) 0.5 mm may be reduced for the thickness of freeboard deck plating when applying the requirements of this Chapter from the thickness obtained from the formula given in 2A.6.1.

(b) The thickness of the freeboard deck plating in spaces carrying cargo oil when applying the requirements in Chapter 11 of Part II, the thickness obtained from the formula given in 11.3 of Part II is to be added at least by 0.5 mm.

2A.10.3 Thickness of tank top plating

The thickness of tank top plating in cargo oil tanks and deep tanks is not to be less than the thickness corresponding to that obtained from the formula given in 2A.6.1 added by 1.0 mm. Such an addition, however, is not required for the thickness of the inner bottom plating.

2A.10.4 Section modulus of longitudinal beams, frames and stiffeners

(a) The section modulus of longitudinal beams provided on deck plating in spaces carrying cargo oil is not to be less than 1.1 times that calculated according to the requirements in 9.3 of Part II.

(b) The section modulus of frames and stiffeners provided on shell plating and bulkheads forming cargo oil tanks planned to carry ballast water, except the tank to carry ballast only in heavy weather conditions, is not to be less than 1.1 times that calculated in accordance with the requirements in 2A.7.1 and 2A.7.2.

2A.10.5 Thickness of plate members in ballast tanks adjacent to cargo oil tanks

(a) The thickness of bulkhead plating at the boundaries between ballast tanks and cargo oil tanks is not to be less than the thickness specified in 2A.4 added by 1.0 mm.

(b) In case where the adjacent cargo oil tanks are equipped with heating systems, the thickness of bulkhead plating at the boundaries between ballast tanks and cargo oil tanks is not to be less than the thickness determined from (a) added by 1.0 mm.

2A.10.6 Thickness of deck plating in cargo oil tanks

(a) The thickness of deck plating in cargo oil tanks is not to be less than the thickness specified in 2A.4 added by 1.0 mm.

2A.10.7 Thickness of inner bottom plating in cargo oil tanks.

(a) The thickness of inner bottom plating of cargo oil tanks is to be sufficient considering the effects of pitting corrosion.

(b) The thickness of inner bottom plating in the vicinity of suction bell mouths in cargo oil tanks, and the thickness of suction wells, when provided, are not to be less than the thickness obtained by the requirements in 2A.6.1(a) or the appropriate area of application added by 2.0 mm.

2A.11 Special Requirements for Tankers with Mid-Deck

2A.11.1 Application

The structural members of tankers having mid-deck penetrating longitudinally through the cargo areas are to comply with the requirements in 2A.1 through 2A.10 in addition to the requirements in 2A.11.

2A.11.2 Loads

Values of h_1, h_2 and h_3 in case where the scantlings of structural members in cargo oil tanks below the mid-deck are obtained from the formulae specified in 2A.6.1, 2A.7.2 and 2A.8.4 are to be as specified in Table III 2A-8.

2A.11.3 Mid-Deck

In case where the thickness of a mid-deck plating is counted as the top plating of the lower cargo oil tank, it is not to be less than the thickness obtained from the formula given in 2A.6.1, using the loads specified in 2A.11.2 adding 1.0 mm thereto.

2A.12 Special Requirements for Forward Wing Tanks

2A.12.1 Application

For tankers of not less than 200 m in length, the structural members in wing tanks which become empty in the full loaded condition for spaces from a point 0.15 L from the bow to the collision bulkhead are to comply with the requirements in 2A.1, 2A.3 through 2A.11 in addition to the requirements in 2A.12.

2A.12.2 Side longitudinals

(a) The section modulus of side longitudinals is not to be less than that obtained from the following formula:

$$Z = 9C_1KShl^2 \quad \text{cm}^3$$

where:

l = As specified in 2A.8.4(e).
S = Spacing of side longitudinals, in m.
h = Distance from the longitudinals under consideration to the point above top of keel obtained from the following formula, in m:
= 0.7d + 0.05L
Where, however, in no case is h to be less than that obtained from the following formula, in m:
= $0.2\sqrt{L} + 0.03L$
C_1, K = As specified in 2A.6.1(a).

(b) In case where side longitudinals are connected to transverses by brackets, the section modulus may be determined by multiplying the value obtained from the following formula by the formula specified in (a):

$$(1 - C)^2$$

where:

C = As obtained from the following formula:

$$C = \frac{b_1 + b_2 - 0.3}{l} \quad \text{where brackets are provided at both ends,}$$

$$C = \frac{b - 0.15}{l} \quad \text{where a bracket is provided at one end.}$$

b_1, b_2, b = Length of bracket arms along longitudinals, in m.

Where, however, in case where the value of C is negative, C = 0. (See Fig. III 2A-5)

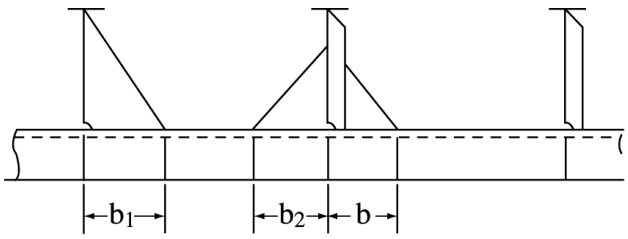

Fig. III 2A-5
Measurement of b, b_1 and b_2

2A.13 Construction and Strengthening of the Forward Bottom

Strengthening of the forward bottom is to comply with the requirements in 8.2 of Part II.

2A.14 Special Requirements for Hatchways and Freeing Arrangements

2A.14.1 Tankers having unusually large freeboard

Relaxation from the requirements in 2A.14 will be considered to tankers having an unusually large freeboard.

2A.14.2 Hatchways to cargo oil tanks

(a) The thickness of coaming plates is not to be less than 10 mm. Where the length and coaming height of a hatch way exceed 1.25 meters and 760 mm respectively, vertical stiffeners are to be provided to the side or end coamings, and the upper edge of coamings is to be suitably stiffened.

(b) Hatch covers are to be of steel or other approved materials. The construction of steel hatch covers is to comply with the following requirements. The construction of hatch covers of materials other than steel is to be in accordance with the discretion of the Society.

(i) The thickness of cover plates is not to be less than 12 mm.

(ii) Where the area of a hatchway exceeds 1 m^2 but does not exceed 2.5 m^2, cover plates are to be stiffened by flat bars of 100 mm in depth space not more than 610 mm apart. Where, however, the cover plates are 15 mm or more in thickness, the stiffeners may be dispensed with.

(iii) Where the area of a hatchway exceeds 2.5 m^2, cover plates are to be stiffened by flat bars of 125 mm in depth spaced not more than 610 mm apart.

(iv) The covers are to be secured by fastenings spaced not more than 457 mm apart in circular hatchways or 380 mm apart and not more than 230 mm from the corners in rectangular hatchways.

(c) The cover is to be provided with an opening at least 150 mm in diameter which is to be so constructed as to be capable of being closed oil tight by means of a screw plug or a cover of peep hole.

(d) Hatchway coamings are to be provided with gas cocks or other suitable exhausting devices.

2A.14.3 Hatchways to spaces other than cargo oil tanks.

In exposed positions on the freeboard and forecastle decks or on the top of expansion trunks, hatchways serving spaces other than cargo oil tanks are to be provided with steel watertight covers having scantlings complying with the requirements in Chapter 17 of Part II.

2A.14.4 Freeing arrangement

(a) Ships with bulwarks are to have open rails for at least half the length of the exposed part of the freeboard deck or to have other effective freeing arrangements. The upper edge of sheer strake is to be kept as low as practicable.

(b) Where superstructures are connected by trunks, open rails are to be provided for the whole length of exposed parts of freeboard deck.

2A.15 Welding

2A.15.1 Application

The welding in tankers is to be accordance with the requirements given in Table XII 5-4 and XII 5-5.

2A.15.2 Fillet welding

(a) The application of fillet welding to structural members within the cargo areas is to be as given in Table III 2A-9.

(b) The leg length of fillet welds in areas given in (i) and (ii) below is to be at least 0.7 times the plate thickness as specified in the requirements in this Chapter.

(i) Fillet welding at the connected parts between the outermost girders in the double bottom and floors.

(ii) Fillet welding at the connected parts between the lowermost girders in the double side hull and transverses.

Table III 2A-8
Loads

Loads \ Provisions	2A.6.1	2A.7.2	2A.8.4
h_1	Vertical distance from the lower edge of bulkhead plating to the mid-deck, in m	Vertical distance from mid-length of l for vertical stiffeners, and from mid-point between the upper and lower stiffeners for horizontal stiffeners to the mid-deck, in m	Vertical distance from mid-length of S for horizontal girders, and from mid-length of *l* for vertical girders to the mid-deck, in m
h_2	0.85 (h_1 + Δh), in m Δh is to be as specified in 2A.6.1(a)	0.85 (h_1 + Δh), in m Δh is to be as specified in 2A.6.1(a)	0.85 (h_1 + Δh), in m Δh is to be as specified in 2A.6.1(a)
h_3	0.7 times the vertical distance from the lower edge of bulkhead plating to the top of hatchway multiplied, in m	0.7 times the vertical distance from mid-length of *l* for vertical stif-feners, and from mid-span of the upper and lower stiffeners for horizontal stiffeners to the top of hatchway, in m	0.7 times the vertical distance from mid-length of S for horizontal girders, and from mid-length of *l* for vertical girders to the top of hatchway, in m

Table III 2A-9
Application of Fillet Welding

Column	Item		Application	Double continuous Type of fillet weld size	Intermittent Pitch (S) (All with 75 mm long of Type 2 fillet weld)
1	Girders and transverses	Web plates	Shell, deck, longitudinal bulkhead or inner bottom plating	2	
2			Web plates	2	
3			Face plates	4	
4		Slots in web plates	Web plates of longitudinal frames, beams and horizontal stiffeners on longitudinal bulkheads	4	
5		Tripping brackets and stiffeners provided on web plates	Web plates	2	200
6			Longitudinal frames, beams horizontal stiffeners on longitudinal bulkheads	2	
7	Longitudinal frames, beams and horizontal stiffeners on longitudinal bulkheads		Shell, deck or longitudinal bulkhead plating	2	200
8	Cross ties		Members forming cross ties (web plates to face plates)	2	200
9			Face plates of transverses or girders	2	

Note: Where the radius at the toe of end brockets is small, it is recommended that Type 2 be used for appropriate length at the toe of bracket.

Chapter 3
Container Carriers

3.1 General

3.1.1 This Chapter applies to ships classed in accordance with the provisions in Chapter 1 of Part I and built for the carriage of containers in holds and on deck. Ships complying with the requirements of this Chapter are to be assigned the service notation of **Container Carrier**. Proposals for the omission of hatch covers will be specially considered to comply with the provisions of the MSC Circular. 608/Rev.1(1994/07/05) of the IMO "Interim Guidelines for Open-top Containerships". Such proposals are to include details, established by model tests or alternative means, of the quantity of water likely to ingress the cargo holds under the worst sea-going and weather conditions, and the means by which it is efficiently and safely discharged.

3.1.2 Except otherwise provided by this Chapter, the requirements for the construction of general ships given in Part II are to be applied.

3.1.3 The scantlings requirements given in this Chapter are generally intended to apply to container carriers with a basic structure configuration which includes a double bottom and a double skin side construction, or alternatively a single skin side construction with an efficient torsion box girder or equivalent structure at topsides. Longitudinal framing is to be fitted at topsides and at the bottom throughout the region of container holds. The side shell clear of the topside torsion box girder may be longitudinally or transversely framed.

3.1.4 The scantlings for ship constructions other than those mentioned above, to which the requirements in this Chapter are not applicable, may be specially considered by the Society.

3.1.5 Where required by the Society, direct calculations are to be employed in derivation of the scantlings of structural members. The scantlings so determined are to be adopted where they exceed the scantlings required by the Rules. Direct calculations are also to be used for unusual structural arrangements.

3.1.6 Special consideration is to be given to ships having hatch openings with a width greater than 0.85B, or where the average rate of the torsional deformation exceeds 0.006° per meter, or where the elongation of the hatch opening diagonal exceeds 35 mm under hydrodynamic torque loading, M_t, as defined in 3.3.1(c).

3.1.7 For container ships contracted for construction on or after 1 July 2016, the following requirements are to be complied with, if applicable:

(a) IACS UR S34 "Functional Requirements on Load Cases for Strength Assessment of Container Ships by Finite Element Analysis"

(b) IACS UR S11A "Longitudinal Strength Standard for Container Ships"

3.2 Submission of Plans and Data

3.2.1 In addition to the plans required by 1.3 of Part II, the followings are to be submitted:

(a) Hull section modulus and inertia calculations about vertical and horizontal axis in way of container holds, are as follows:

(i) At the forward end of the engine room.
(ii) At the forward end of the foremost container hatch.
(iii) At five intermediate sections, at least three of which are to be within 0.4L amidships.
(iv) At any other sections where there are structural changes.

(b) Details of hatch coamings and underdeck longitudinal girders supporting hatch coamings, together with their modulus and inertia calculations.

(c) Plan showing overlap arrangement and scarfing of steps in longitudinal inner skin bulkheads.

(d) An outline plan showing arrangement of cell guides, and indicating the position of guides relative to hatch corner radii, and attachment to structure members.

(e) An outline plan showing stowage arrangement and securing plan of containers.

(f) Details of reinforcement to structure in way of container corners.

(g) Combined stress diagrams with envelope of still water bending moments and wave bending moments.

(h) Direct calculations for structural scantlings as specified in 3.1.5.

(i) Container stowage and securing manual which include copies of the container stowage and securing plans as well as an inventory list for all container securing equipment required for the ship.

3.3 Longitudinal Strength

Longitudinal strength calculations are to be made in accordance with the requirements given in Part II, Chapter 3, covering the range of load and ballast conditions proposed for the ship. The longitudinal strengh requirements in IACS UR S11A are also to be complied with, if applicable as specified in 3.1.7.

3.4 Double Bottoms

3.4.1 The requirements in Chapter 5 of Part II are generally to apply. However, the construction of double bottoms in holds which are exclusively loaded with containers is to be in accordance with the requirements of this Section.

3.4.2 Side girders, solid floors or local stiffeners are to be provided in double bottoms under container corner seating.

3.4.3 For double bottoms having a depth greater than 1.6 m, additional stiffening may have to be introduced in order to ensure the buckling stability of the side girders.

3.4.4 The inner bottom plating with which their corner fittings of containers are in contact is to be strengthened by means of doubling or by other appropriate means.

3.5 Decks

3.5.1 The Upper deck is to be longitudinally framed throughout the region of container holds for ships where L ≥ 100 m, and the midship scantlings are generally to extend over the region of the container holds.

3.5.2 The scantlings of upper and second deck plating and stiffeners are to satisfy the modulus requirements of 3.3, and are to be not less than that required by Chapter 11 of Part II. The thickness of strength deck may be required to be increased locally in way of large openings.

3.5.3 Attention is to be paid to structural continuity, and abrupt changes of shape, section or plate thicknesses are to be avoided. Where the difference between the thicknesses of plating inside and outside the line of main hatches exceeds 12 mm, a transitional plate of a thickness equivalent to the mean of the adjacent plate thickness is to be fitted.

3.5.4 Arrangements in way of corners and openings are to be such as to minimize the creation of stress concentration. Corners of main hatchway openings are to be rounded with a radius not less than:

0.525L + 350 mm, for outboard corners.
0.3L + 250 mm, for inboard corners.
40B mm, for corners adjacent to engine room.

Where:
L = Length of ship, in m.
B = Breadth of ship, in m.
Parabolic or elliptic corners, or corners with less radii are to be specially considered.

3.5.5 If insert plates are required at main hatch corners. They are to have a thickness increase above the adjacent plating outside the line of hatchways of 15% in way of container holds, and 25% in container holds at the engine room bulkheads. The minimum increase is to be not less than 4 mm, and minimum fore and aft extent is to be 1 m from the edge of openings.

3.5.6 Longitudinal underdeck girders of open sections or closed box sections are to be fitted at deck level to support hatch coamings. They are to be continuous throughout the container hold area, including the machinery space which is situated between container holds.

3.6 Shell Plating and Double Skin

3.6.1 The thickness of the bottom, bilge and side shell plating is to comply with the requirements in Chapter 7 of Part II, and is to be such as to achieve the hull modulus required to limit the combined stress to that given in 3.3. However, at positions where high forces are present, and where the double skin construction is terminated, local increases in thickness may be required.

3.6.2 Side shell and inner skin longitudinal bulkheads may be transversely or longitudinally framed. The continuity of the longitudinal material is to be maintained in way of container holds and the machinery space which is situated between container holds.

3.6.3 In general, the thickness of the strake below the sheer strake is to be not less than 80% of the sheer strake thickness, and the thickness of the strake below the top strake of inner skin longitudinal bulkhead is to be not less than 80% of the top strake thickness, but the difference in thickness is in no case to exceed 12 mm.

3.6.4 Where the inner skin bulkheads are stepped to accommodate the container stowage arrangement, the scantlings and stiffening arrangement are to be specially considered. The scarfing arrangements in way of the steps are to be sufficient to ensure an efficient overlap of the inner skin bulkheads.

3.7 Fixed Cell Guides

3.7.1 Arrangement of fixed cell guides

(a) Vertical guides generally consist of sections with equal sides, not less than 12 mm in thickness, extended for a height sufficient to give uniform support to containers.

(b) Guides are to be connected to each other and to the supporting structures of the hull by means of cross-ties and longitudinal members such as to prevent deformation due to the action of forces transmitted by containers.

In general, the spacing between cross-ties connecting the guides may not exceed 5 metres, and their position is to coincide as nearly as possible with that of the container corners.

Cross-ties are to be longitudinally restrained at one or more points so that their elastic deformation due to the action of the longitudinal thrust of containers does not exceed 20 mm at any point.

(c) The upper end of the guides is to be fitted with a block to facilitate entry of the containers. Such appliance is to be of robust construction so as to withstand impact and chafing.

3.7.2 Strength criteria

The local stresses in the elements of cell guides, transverse and longitudinal cross-ties, and connections with the hull structure are to be less than the following values:

(a) normal stress：150/k (N/mm^2)

(b) shear stress：100/k (N/mm^2)

(c) Von Mises equivalent stress: 175/k (N/mm^2)

Where k is material factor defined in Part II/1.5.2 (a) of the Rules. Calculations are to consider net scantlings in accordance with IACS UR S11A.

3.8 Lashing Bridge

3.8.1 General

(a) Container securing

Containers on deck may be secured by means of lashing bridges permanently connected by welding to the ship structure. Lashing bridges allow lashing at a higher level.

(b) Material

Materials used are to comply with Part XI of the Rules. The manufacturing processes and testing are to comply with the applicable requirements of Part XII of the Rules.

(c) Strength verification

Drawings of the lashing bridge structure and details of the supporting structure are to be submitted to the Society for approval together with details on the calculations carried out.

Calculations shall be based at least on a three-dimensional beam analysis or on finite element analysis.

Calculations are to consider net scantlings in accordance with IACS UR S11A.

The mesh size requirement for each component of the lashing bridge model is to be as follow:

Table III 3-1
Mesh Size for Lashing Bridge Model

Application	Mesh Size
Hull structure below the lashing bridge: - Stringer - Upper deck - Bulkhead - Side shell/Inner shell	Secondary stiffener spacing or smaller
Lashing bridge structure and region connecting to the hull structure: - Vertical, horizontal and diagonal members/columns - Hatch coaming top	20t × 20t or 150 mm × 150 mm
Hot spot stress locations: - Lashing eye brackets - Brackets, etc.	To allow adequate representation of structural geometry and accurate determination of stress concentrations. Need not be less than t × t
Note: t is the smaller member thickness.	

(d) General arrangement

Structural continuity is to be ensured at the connections of the vertical supports of the lashing bridge to the ship structure.

3.8.2 Design loads

(a) General

Forces applied to the lashing bridge structure are to consider the loads transferred by containers. Force intensity is considered by the Society on a case by case basis, depending on the lashing arrangement and the proportion of the load that is considered as transferred to the lashing bridge structure.

(b) Container loads

To derive loads induced by container lashing devices, loads to be applied to container stacks include still water, inertial and wind forces.

(c) Forces applied on lashing bridge

Forces applied on each fixed cargo securing device on the lashing bridge shall be considered acting in the direction of the lashing bar.

In general, the SWL (Safe Working Load) for fixed cargo securing device may be taken as 250 kN and the applied force as 70% of this SWL value.

(d) Loading conditions

The following loading conditions are to be considered for the calculation of lashing bridges:

(i) both fore and aft bay of the lashing bridge are loaded with containers

(ii) fore bay of the lashing bridge is loaded with containers while the aft bay is empty

(iii) aft bay of the lashing bridge is loaded with containers while the fore bay is empty.

Loading condition (i) is intended to maximize vertical and transverse forces acting on the lashing bridge. Loading conditions (ii) and (iii) are intended to maximize the longitudinal forces acting on the lashing bridge.

3.8.3 Strength criteria

Permissible stresses for all supports and plating elements should comply with Part II/17.2.5 (a) of the Rules.

3.9 Breakwater

3.9.1 General

When a breakwater is fitted on deck to protect the containers from green sea loads, it is to comply with the requirements given in 3.8.2 and 3.8.3.

3.9.2 Design loads

Design loads on the breakwater are to be taken as the design head for unprotected lowest tier front bulkhead of superstructure, as defined in Part II/Ch.12.3.

3.9.3 Strength criteria

Scantlings of plating and stiffeners are to be evaluated according to criteria for unprotected lowest tier front bulkhead of superstructure, as described in Part II/Ch.12.

3.10 Measures to Prevent Propagation of Brittle Fractures

For container carriers where extremely thick steel plates are applied for longitudinal structural members, measures to prevent propagation of brittle fractures are to be taken in accordance with Part XI 3.10.

3.11 Direct Strength Assessment

3.11.1 General

(a) Cargo Hold Analysis is to be carried out for ships of length 150 m or above. An additional Global Analysis is to be carried out for ships of length 250 m or above.

(b) Fatigue assessment is to be carried out on ships equal to or greater than 150 m in length. It may also be required on ships less than 150 m in length, if deemed necessary by the Society.

(c) Direct Strength assessment is to be carried out according to Appendix III-1, considering load cases and loading conditions as described in 3.11.2~3.11.4. The acceptance criteria for the strength assessment are to be referred to IACS UR S11A.

(d) Direct Strength assessment is to consider the net scantling in accordance with IACS UR S11A.

(e) Definition

(i) Global Analysis

A Global Analysis is a finite element analysis, using a full ship model, for assessing the structural strength of global hull girder structure, cross deck structures and hatch corner radii.

(ii) Cargo Hold Analysis

A Cargo Hold Analysis is a finite element analysis for assessing the structural strength of the cargo hold primary structural members (PSM) in the midship region.

(iii) Primary Structural Members (PSM)

Primary structural members are members of girder or stringer type which provide the overall structural integrity of the hull envelope and cargo hold boundaries, such as:

(1) double bottom structure (bottom plate, inner bottom plate, girders, floors)

(2) double side structure (shell plating, inner hull, stringers and web frames)

(3) bulkhead structure

(4) deck and cross deck structure

3.11.2 Load components

(a) Global analysis

The following methods may be used for Global Analysis:

(i) Method 1: Analysis where hull girder loads only (vertical bending moment, horizontal bending moment and torsional moment) are directly applied to the full ship finite element model

(ii) Method 2: Analysis where direct loads transferred from direct load analysis are applied to the full ship finite element model

The load components to be considered in Global Analysis are defined in Table III 3-2.

The loads definition is to be obtained accordingly to the flowchart presented in Fig. III 3-1.

Table III 3-2
Load Components to be Considered in Global Analysis

	Static load	Dynamic load
Method 1	- Still water vertical bending moment - Still water torsional moment	- Wave-induced vertical bending moment - Wave-induced horizontal bending moment - Wave-induced torsional moment
Method 2	- Static sea pressure - Static container loads - Static loads for ballast and fuel oil - Self-weight of hull structure	- Wave-induced sea pressure - Dynamic loads for hull structure, containers, ballast and fuel oil

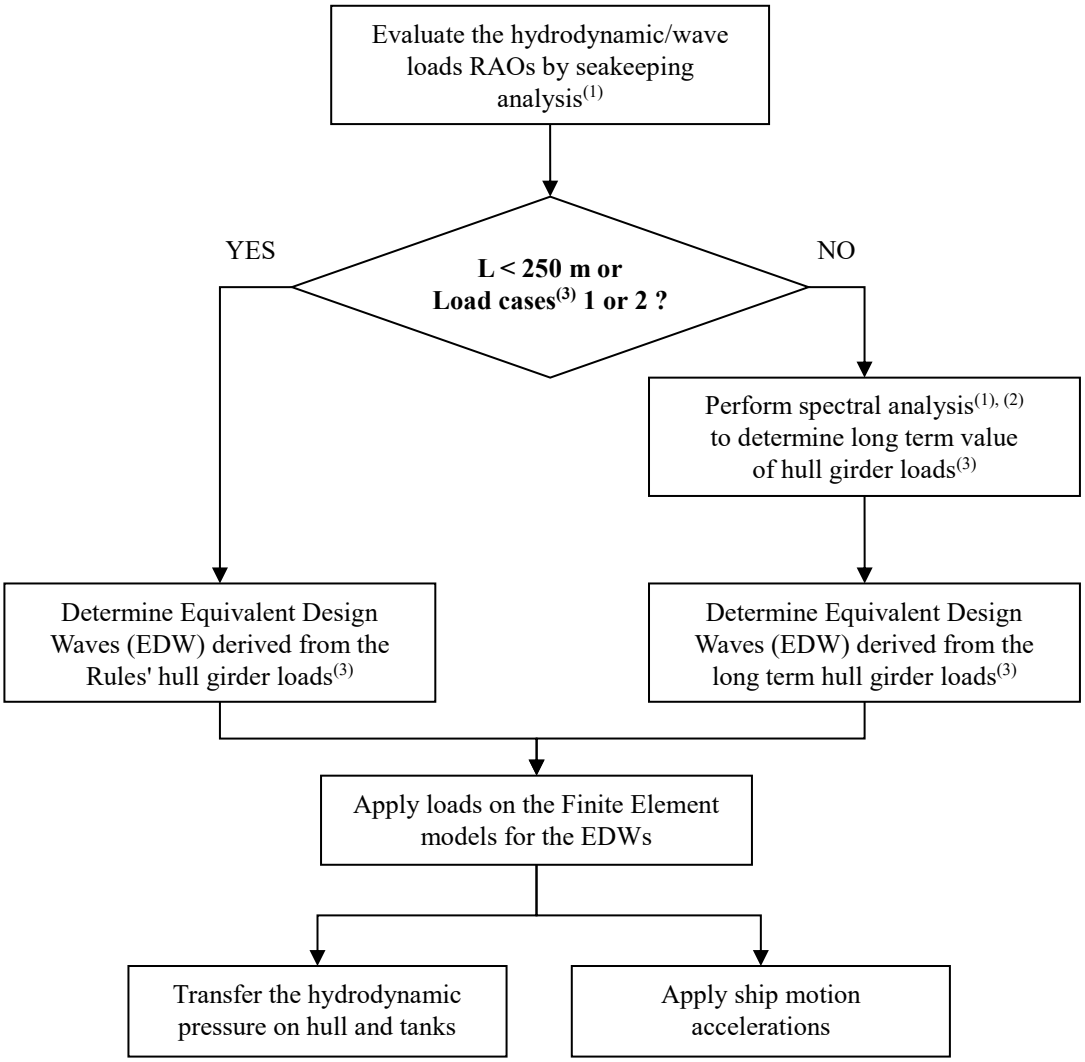

Notes:
(1) CR Internal Guidance for Seakeeping Assessment
(2) Spectral analysis settings are provided in Appendix III-1
(3) Governing loads as provided in Table III 3-5. Rules values of hull girder loads are provided in 3.11.5.

Fig. III 3-1
Flowchart for the Determination of Governing Loads for Global Analysis

(b) Cargo hold analysis

The load components to be considered in Cargo Hold Analysis are defined in Table III 3-3.

Table III 3-3
Load Components to be Considered in Cargo Hold Analysis

	Static load	Dynamic load
Hull girder loads	- Still water vertical bending moment	- Wave-induced vertical bending moment - Wave-induced horizontal bending moment - Wave-induced torsional moment
Local loads	- Static sea pressure - Static container loads - Static loads for ballast and fuel oil(1) - Self-weight of hull structure	- Wave-induced sea pressure - Dynamic loads for hull structure containers, ballast and fuel oil (1)

Note:

(1) For the minimum set of loading conditions specified in Table III 3-4, all ballast and fuel oil tanks in way of the cargo hold model are to be empty. If additional loading conditions other than those given in Table III 3-4 are considered, ballast and fuel oil loads may be taken into consideration at the discretion of the Society.

3.11.3 Loading conditions

(a) Global analysis

A single loading condition is to be selected from the loading manual, considering the following criteria:

(i) the ship is to be homogeneously loaded with 40' containers (few 20' containers might be used to fill in empty spaces)

(ii) cargo holds are to be loaded up to their top

(iii) no ballast water is carried in the cargo hold region

(iv) among all conditions that fulfil the above requirements, the one with the lightest weight per container is to be selected.

If no relevant homogeneous loading condition is provided without ballast water, the one with the least ballast water is to be selected.

This generally leads to a nominal container weight of 28 t / FEU. Any significant deviation to this value shall be discussed with the Society.

(b) Cargo hold analysis

The minimum set of loading conditions is specified in Table III 3-4. In addition, loading conditions from the Loading Manual are to be considered in the Cargo Hold Analysis where deemed necessary.

Table III 3-4
Minimum Set of Loading Conditions for Cargo Hold Analysis

Loading Condition	Draught	Container weight	Ballast and fuel oil tanks	Still water hull girder moment
Full load condition	Scantling Draught	Heavy cargo weight(1) (40' containers)	Empty	Permissible hogging(7)
Full load condition	Scantling Draught	Light cargo weight(2) (40' containers)	Empty	Permissible hogging(7)
Full load condition	Reduced draught(3)	Heavy cargo weight(1) (20' containers)	Empty	Permissible sagging(7) (or minimum hogging)
One bay empty condition(4)	Scantling Draught	Heavy cargo weight(1) (40' containers)	Empty	Permissible hogging(7)
Ballast condition	Ballast draught(5)	Cargo holds empty	Full Ballast/ Empty fuel oil tanks	From the loading manual
Flooding condition (Any cargo hold flooded)	Flooding draught(6)	Heavy cargo weight(1) (40' containers)	Empty	-(6)

Notes:

(1) Heavy cargo weight of a container unit is to be calculated as the permissible stacking weight divided by the maximum number of tiers planned.

(2) Light cargo weight corresponds to the expected cargo weight when light cargo is loaded in the considered holds.

- Light cargo weight of a container unit in hold is not to be taken more than 55% of its related heavy cargo weight (see (1) above).

- Light cargo weight of a container unit on deck is not to be taken more than 90% of its related heavy cargo weight (see (1) above) or 17 metric tons, whichever is the lesser.

(3) Reduced draught corresponds to the expected draught amidships when heavy cargo is loaded in the considered holds while lighter cargo is loaded in other holds. Reduced draught is not to be taken more than 90% of scantling draught.

(4) For one bay empty condition, if the cargo hold consists of two or more bays, then each bay is to be considered entirely empty in hold and on deck (other bays full) in turn as separate load cases.

(5) The ballast draught is to be taken as the minimum ballast draught provided in the loading manual and the still water bending moment is to be taken from the same condition.

(6) The flooding draught is the deepest equilibrium waterline in damaged condition obtained from applicable damage stability calculations. If the value is not available at the design stage, draught is to be considered up to the freeboard deck. It is to be checked at a later stage that the deepest equilibrium waterline remains below the freeboard deck. Hull girder loads are disregarded and the structural analysis is only carried out on the transverse bulkheads.

(7) Permissible maximum (hogging) and minimum (sagging) vertical still water bending moments at any longitudinal postion are to envelop

- The maximum and minimum still water bending moments for the seagoing loading conditions defined in the Loading Manual.

- The maximum and minimum still water bending moments and shear forces specified by the designer.

3.11.4 Load cases (wave conditions)

The ship is to be considered sailing in the North Atlantic wave environment for yielding and buckling assessments. The corresponding vertical wave bending moments are to be in line with IACS UR S11A and the hull girder loads formulations to be considered are provided in 3.11.5.

(a) Global analysis

Wave conditions presumed to lead to the most severe load combinations due to vertical bending moment, horizontal bending moment and torsional moment are to be considered.

Table III 3-5
Governing Load Cases

Load case	Governing load	Wave heading	Wave length
1	Maximum vertical wave bending moment amidship in hogging condition	180°	Peak value of vertical wave bending moment RAO amidship
2	Maximum vertical wave bending moment amidship in sagging condition	180°	Peak value of vertical wave bending moment RAO amidship
3	Maximum roll motion amidship	90°	Peak value of roll motion RAO amidship
4	Maximum wave pressure at the waterline amidship	90°	Peak value of wave pressure RAO amidship
5	Maximum horizontal wave bending moment amidship	~120° (1)	Peak value of horizontal wave bending moment RAO amidship
6	Maximum wave torque in vicinity of 0.75 L from AP	~60° (1)	Peak value of wave torque RAO at 0.75L
7	Maximum heave motion at fore end	~120° (1)	Peak value of heave motion RAO at fore end

Note:

(1) For Rules' load based EDWs (see Fig. III 3-1), the wave heading corresponds to the highest peak value of the RAO. For long term value based EDW (see Fig. III 3-1), the wave heading is to be selected as the most contributive one to the long-term value.

(b) Cargo hold analysis

The following wave conditions are to be considered:

(i) Head sea condition yielding the maximum hogging and sagging vertical bending moments.

(ii) Beam sea condition yielding the maximum roll motion. This condition may be disregarded for some loading conditions defined in Table III 3-4 where deemed not necessary.

3.11.5 Wave loads

(a) Vertical wave bending moment

The distribution of the vertical wave induced bending moments, M_W in kNm, along the ship length is given in Fig. III 3-3, where:

$$M_{W-Hog} = +1.5 f_R L^3 C C_W \left(\frac{B}{L}\right)^{0.8} f_{NL-Hog}$$

$$M_{W-Sag} = -1.5 f_R L^3 C C_W \left(\frac{B}{L}\right)^{0.8} f_{NL-Sag}$$

L = Ship Length, in m

C = Wave parameter

$$C = 1 - 1.50\left(1 - \sqrt{\frac{L}{L_{ref}}}\right)^{2.2} \quad \text{for } L \le L_{ref}$$

$$C = 1 - 0.45\left(\sqrt{\frac{L}{L_{ref}} - 1}\right)^{1.7} \qquad \text{for } L > L_{ref}$$

L_{ref} = Reference length, in m, taken as:

= $315C_W^{-1.3}$ for the determination of vertical wave bending moments

C_w = Waterplane coefficient at scantling draught

B = Moulded breadth, in m

f_R = Factor related to the operational profile, to be taken as: $f_R = 0.85$

$f_{NL\text{-}Hog}$ = Non-linear correction for hogging, to be taken as:

$f_{NL\text{-}Hog} = 0.3 \cdot (C_B/C_W) \cdot \sqrt{T}$, not to be taken greater than 1.1

$f_{NL\text{-}Sag}$ = Non-linear correction for sagging, to be taken as:

$f_{NL-Sag} = 4.5\left(\frac{1 + 0.2f_{BOW}}{C_W\sqrt{C_B}L^{0.3}}\right)$, not to be taken less than 1.0

f_{Bow} = Bow flare shape coefficient, to be taken as: $\frac{A_{DK} - A_W}{0.2L_{zf}}$

A_{DK} = Projected area in horizontal plane of uppermost deck, in m2 including the forecastle deck, if any, extending from 0.8L forward (see Fig. III 3-2). Any other structures, e.g. plated bulwark, are to be excluded.

A_W = Waterplane area, in m^2, at draught T, extending from 0.8L forward

Z_f = Vertical distance, in m, from the waterline at draught T to the uppermost deck (or forecastle deck), measured at FE (see Fig. III 3-2). Any other structures, e.g. plated bulwark, are to be excluded.

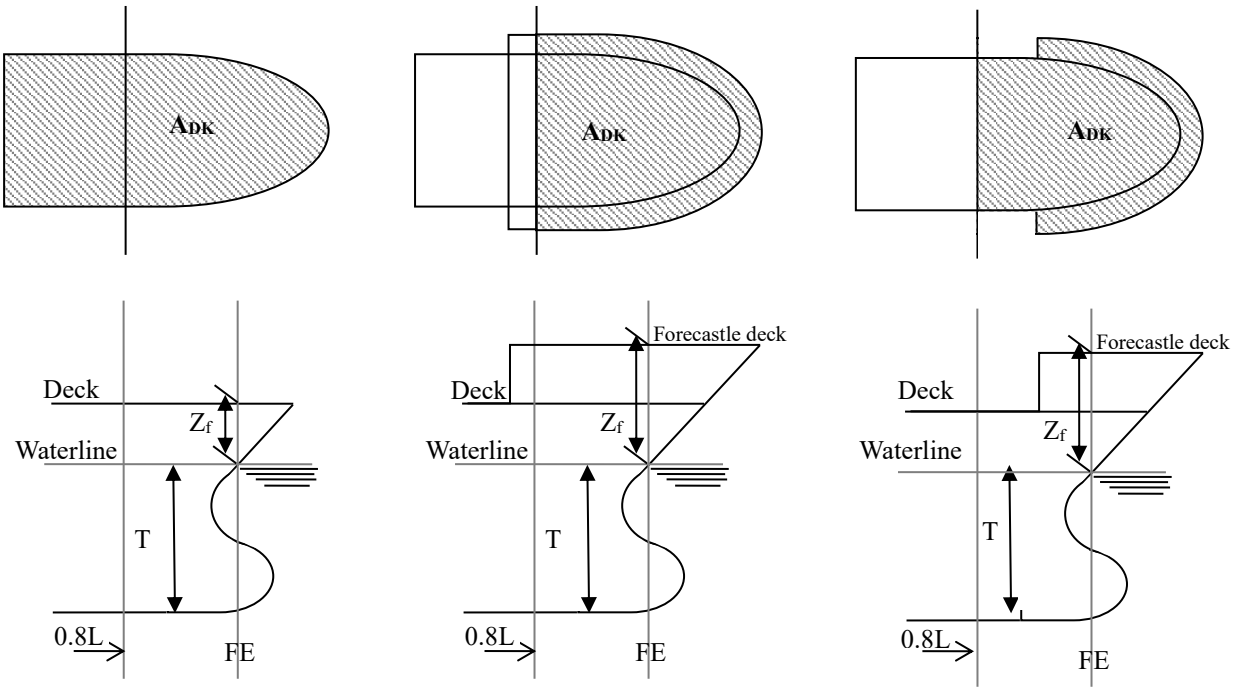

Fig. III 3-2
Projected Area A_{DK} and Vertical Distance Z_f

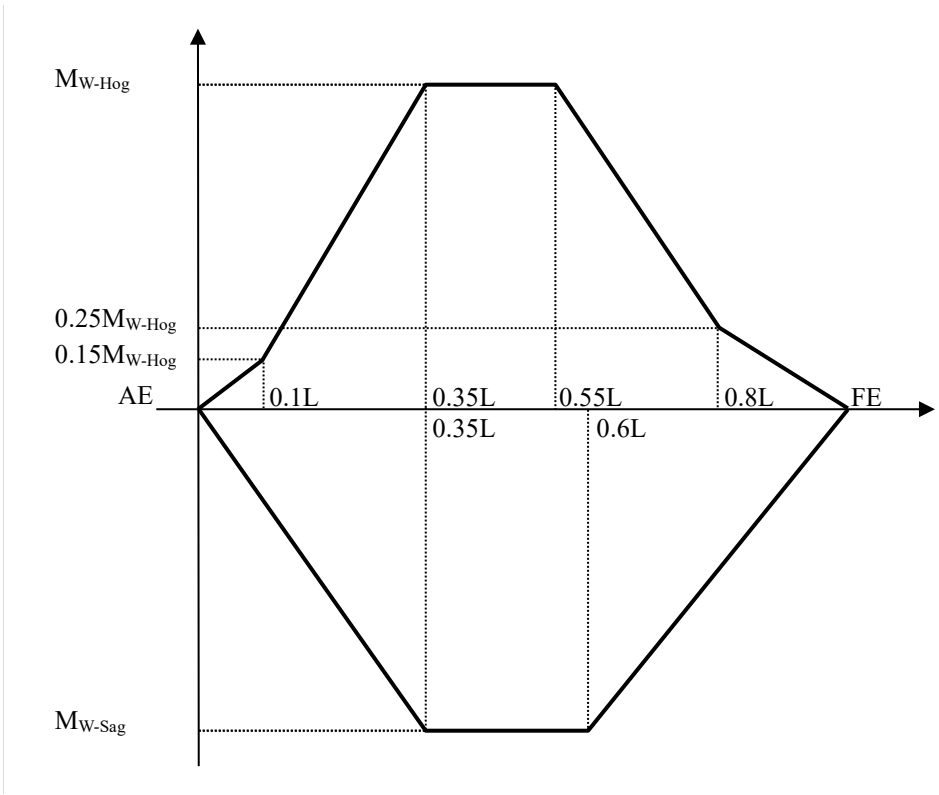

Fig. III 3-3
Distribution of Vertical Wave Bending Moment M_W along the Ship Length

(b) Horizontal wave bending moment

The horizontal wave bending moment at any hull transverse section is obtained, in kN · m, from the following formula:

$$M_{WH} = 0.42\ F_M\ H\ L^2\ T\ C_B$$

where

F_M = Distribution factor defined in Table III 3-6 (see Fig. III 3-4).

H = Wave parameter

= $8.13 - \left(\frac{250 - 0.7L}{125}\right)^3$, without being taken greater than 8.13

Table III 3-6
Distribution Factor F_M

Hull transverse section location	Distribution factor F_M
$0 \le x < 0.4\ L$	$2.5\frac{x}{L}$
$0.4\ L \le x \le 0.65\ L$	1
$0.65\ L < x \le L$	$2.86\left(1 - \frac{x}{L}\right)$

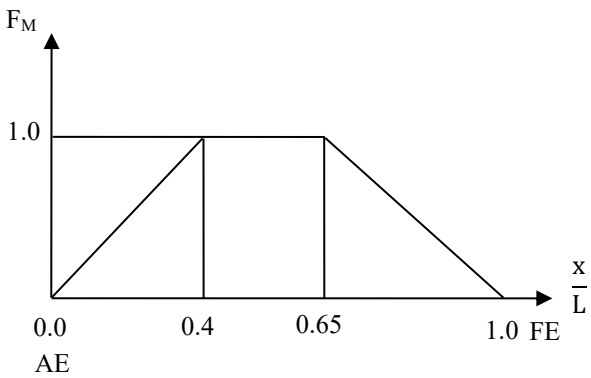

Fig. III 3-4
Distribution Factor F_M

(c) Wave torque

The wave torque at any hull transverse section is to be calculated considering the ship in two different conditions:

(i) condition 1: ship direction forming an angle of 60° with the prevailing sea direction

(ii) condition 2: ship direction forming an angle of 120° with the prevailing sea direction.

The values of the wave torques in these conditions, calculated with respect to the section center of torsion, are obtained, in $kN \cdot m$, from the following formula:

$$M_{WT} = \frac{HL}{4}(F_{TM}C_M + F_{TQ}C_Q d)$$

F_{TM}, F_{TQ} = Distribution factors defined in Table III 3-7 for ship conditions 1 and 2

C_M = Wave torque coefficient:

$C_M = 0.45\ B^2\ C_W^2$

C_Q = Horizontal wave shear coefficient:

$C_Q = 5\ T\ C_B$

C_W = Waterplane coefficient, to be taken not greater than the value obtained from the following formula:

$C_W = 0.165 + 0.95\ C_B$

where C_B is to be assumed not less than 0.6. In the absence of more precise determination, C_W may be taken equal to the value provided by the above formula.

d = Vertical distance, in m, from the center of torsion to a point located 0.6 T above the baseline.

Table III 3-7
Distribution Factors F_{TM} and F_{TQ}

Ship condition	Distribution factor F_{TM}	Distribution factor F_{TQ}
1	$1 - \cos\frac{2\pi x}{L}$	$\sin\frac{2\pi x}{L}$
2	$1 - \cos\frac{2\pi(L - x)}{L}$	$\sin\frac{2\pi(L - x)}{L}$

3.11.6 Forces applied to containers

(a) Still water and inertial forces

The still water and inertial forces applied to one container located at tier "i", are to be obtained, in kN, as specified in Table III 3-8.

Table III 3-8
Container at Tier "i" Still Water and Inertial Forces

Load case	Still water force F_S and inertial force F_W, in kN
Still water	• in z direction z: $F_{S,i} = M_i.g$
Head sea (positive heave motion)	• in x direction x: $F_{W,X,i} = M_i\ a_{X1}$ • in z direction z: $F_{W,Z,i} = M_i\ a_{Z1}$
Beam sea (negative roll angle)	• in y direction y: $F_{W,Y,i} = M_i\ a_{Y2}$ • in z direction z: $F_{W,Z,i} = M_i\ a_{Z2}$

g = Gravitational acceleration, in m/s^2:

= 9.81 m/s^2

M_i = Mass, in t, of the container at tier "i"

a_{X1}, a_{Z1} = Reference values of longitudinal and vertical accelerations, in m/s^2, determined at the container center of gravity in accordance with "Condition B" as specified in 5.2.4 of the "Guidelines for Certification of Container Securing Systems."

a_{Y2}, a_{Z2} = Reference values of longitudinal and vertical accelerations, in m/s^2, determined at the container center of gravity in accordance with "Condition A" as specified in 5.2.4 of the "Guidelines for Certification of Container Securing Systems."

(b) Empty containers

When empty containers are stowed at the top of a stack, still water and inertial forces are to be derived considering weight of empty containers equal to:

(i) 2.5 t for twenty feet containers

(ii) 3.5 t for forty feet containers

(iii) 3.5 t for forty-five feet containers.

For other container sizes, the weight of empty containers is to be taken equal to 0.14 times the maximum gross weight of the container.

(c) Wind forces

The forces due to the effect of the wind, applied to one exposed container stowed above deck at tier "i", are to be obtained, in kN, from the following formulae:

in x direction x : $F_{x,wind,i} = 1.08\ h_C\ b_C$

in y direction y : $F_{y,wind,i} = 1.08\ h_C\ l_C$

where:

h_C = Height, in m, of a container

l_C, b_C = Dimension, in m, of the container stack in the ship longitudinal and transverse direction, respectively.

These forces only act on a stack exposed to wind. In the case of M juxtaposed and connected stacks of the same height, the wind forces are to be distributed over the M stacks.

In the case of juxtaposed and connected stacks of different heights, the wind forces are to be distributed taking into account the number of stacks at the tier considered (see example on Fig. III 3-5).

Note: Are said "exposed containers" any containers which the position/arrangement comply with the definition provided in 5.2.2 of the "Guidelines for Certification of Container Securing Systems."

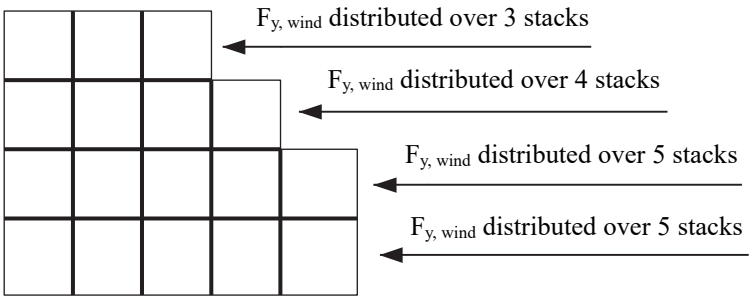

Fig. III 3-5
Distribution of Wind Forces in the Case of Stacks of Different Heights

(d) Stacks of containers

The still water, inertial and wind forces are to be considered as being applied at the center of gravity of the stack, and forces transmitted at the corners of such a stack are to be obtained as specified in Table III 3-9.

If the container securing strength calculations have been conducted accordingly to the "Guidelines for Certification of Container Securing Systems", the produced vertical reaction forces at the corner of the stack can be employed.

Table III 3-9
Container Stack Load and Corners Vertical Reaction Forces

Load case	Still water force F_S and inertial and wind force F_W, in kN, acting on each container stack	Vertical still water force R_S and inertial and wind force R_W, in kN, transmitted at the corners of each container stack
Still water	$F_S = \sum_{i=1}^{N} Fs, i$	$R_s = \frac{F_s}{4}$
Head sea (positive heave motion) (see Fig. III 3-6)	• in x direction $F_{w,x} = \sum_{i=1}^{N}(F_{w,x,i} + F_{x,wind,i})$ • in z direction $F_{w,z} = \sum_{i=1}^{N} F_{w,z,i}$	$R_{w,1} = \frac{F_{w,z}}{4} + \frac{N_c h_c F_{w,x}}{4l_c}$ $R_{w,2} = \frac{F_{w,z}}{4} - \frac{N_c h_c F_{w,x}}{4l_c}$
Beam sea (negative roll angle) (see Fig. III 3-7)	• in y direction $F_{w,y} = \sum_{i=1}^{N}(F_{w,y,i} + F_{y,wind,i})$ • in z direction $F_{w,z} = \sum_{i=1}^{N} F_{w,z,i}$	$R_{w,1} = \frac{F_{w,z}}{4} + \frac{N_c h_c F_{w,y}}{4b_c}$ $R_{w,2} = \frac{F_{w,z}}{4} - \frac{N_c h_c F_{w,y}}{4b_c}$

Note:

(1) N_C = Number of containers per stack

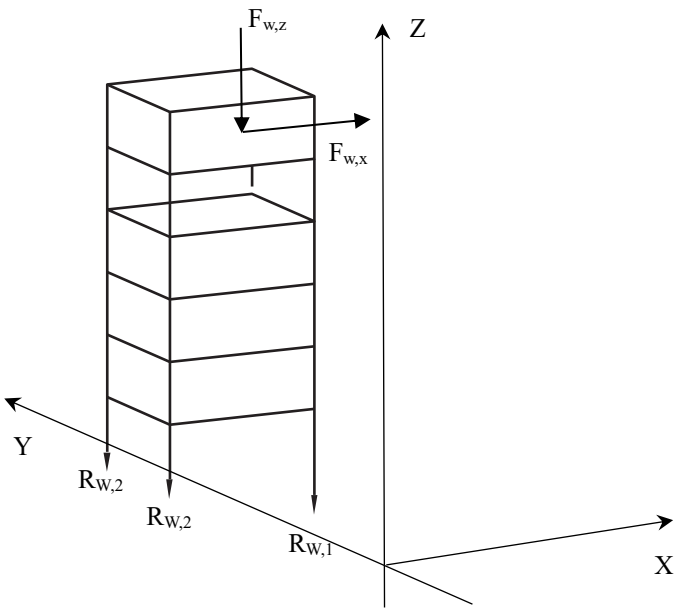

Fig. III 3-6
Container Stack Loads and Reaction Forces at Corners for Head Sea Condition

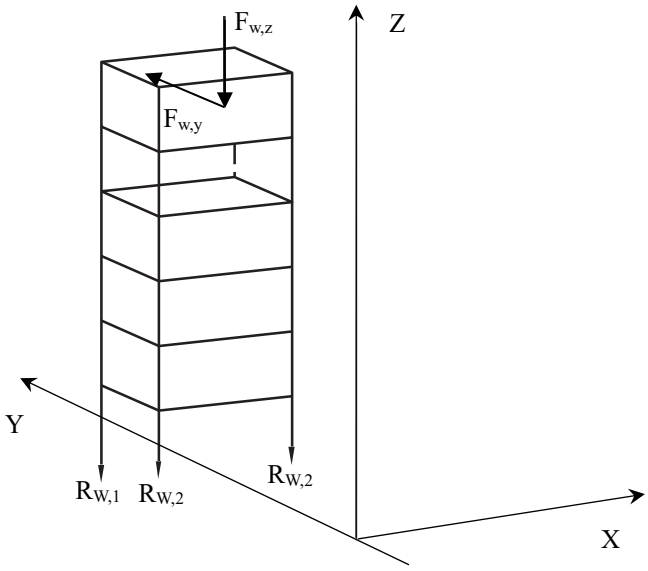

Fig. III 3-7
Container Stack Loads and Reaction Forces at Corners for Beam Sea Condition

(e) Effect of cell guides

Where cell guides support the containers stowed in holds, values of $R_{W,1}$ and $R_{W,2}$ calculated according to 3.11.6(d) for Beam sea condition, may be assumed not to be greater than ($F_{W,Z}$ / 4 + 160), provided that arrangements of cell guides and horizontal transverse crossties, effectively block the container corners.

Any other arrangement may be accepted, to the Society's satisfaction.

3.11.7 Mesh size

Mesh size for finite element modelling should comply with Appendix III-1 3.3.

(a) Global analysis model is to be built using a coarse mesh.

(b) Cargo hold analysis model is to be built using a coarse mesh.

(c) A fine mesh analysis is to be carried out for high stress areas of the cargo hold model. In addition, the following details are to be investigated by means of a fine mesh analysis:

(i) Representative hatch corners in way of cargo holds (from the second deck to the top of hatch coaming, where second deck means the first complete deck below the main deck), in particular in way:

(1) of connections between the engine room and adjacent cargo holds (aft and fore)

(2) of connections between fuel oil tanks and adjacent cargo holds

(3) of a representative watertight bulkhead amidships and of the first watertight bulkhead forward of the engine room fore bulkhead (if different)

(4) of support bulkheads beside the watertight bulkheads listed above

(5) of the first discontinuity forward at each deck level (each complete deck above the inner bottom)

(6) of any other areas with significant scantling modifications

(ii) Ends of hatch coamings

(iii) Openings in way of engine room platforms (from the second deck to the upper deck)

(iv) Openings in way of fuel oil tanks platforms, when deep fuel oil tanks are located in the cargo hold area (from the second deck to the upper deck)

(v) Typical uppermost and lowest openings in vertical girders of transverse watertight bulkhead

(vi) Typical connection of longitudinal step bulkheads with web frames, inner hull and inner bottom as well as holes nearby.

Fine mesh analysis might also be required on other details when deemed relevant by the Society

(d) When fatigue assessment is required, the following structural details are to be checked using a very fine mesh model:

(i) Representative hatch corners in way of cargo holds (from the second deck to the top of hatch coaming)

(ii) Ends of hatch coamings

(iii) Openings in way of engine room platforms (from the second deck to the upper deck)

(iv) Openings in way of fuel oil tanks platforms, when deep fuel oil tanks are located in the cargo hold area (from the second deck to the upper deck)

(v) Connection of longitudinal stiffeners with stiffeners of transverse primary supporting members or bulkheads

(vi) Connection of longitudinal stiffeners with transverse primary supporting members or bulkheads (without stiffener on transverse primary member connected to longitudinal stiffeners).

Items (i) to (iv) are to be checked through a spectral fatigue analysis. As an alternative, for ships of length less than 250 m, they might be checked using the deterministic approach. Items (v) and (vi) are to be checked following a deterministic approach.

Fatigue calculation might be requested for other details when deemed relevant by the Society.

Chapter 4
Liquefied Gas Carriers

4.1 General

4.1.1 This Chapter applies to ships classed for the carriage in bulk of liquefied gases having an absolute vapor pressure exceeding 0.28 MPa (2.8 kgf/mm^2) at a temperature of 37.8°C. Where permitted by the class notations assigned to the ship, certain other substances may also be carried.

4.1.2 Except otherwise provided by this Chapter, the ship's hull, machinery and equipment are generally to comply with the requirements in relevant Parts of the Rules.

4.1.3 In addition to the applicable requirements of the Rules, the ship is to comply with the requirements of the International Maritime Organization (IMO) Resolution MSC.5(48) "International Code for the Construction and Equipment of Ships Carrying Liquefied Gases in Bulk" (hereinafter referred to as IGC Code), adopted on 17 June 1983 and amendments in force, except that the requirements for personnel, operating and as prescribed in 4.1.4 are not within the scope of classification.

4.1.4 The following requirements of IGC Code are not classification requirements, however, when the Society is authorized to issue an "International Certificate of Fitness for the Carriage of Liquefied Gases in Bulk" under provisions of IGC Code 1.5, and carries out surveys on behalf of an Administration, all requirements are to be applied:

2.2 Freeboard and stability
2.3 Damage and flooding assumptions
2.4 Survival requirements
2.5 Standard of damage
2.6 Location of cargo tanks
2.7 Special consideration for small ships

4.1.5 Gas carriers also intended for carriage of oil are to comply with the rules for oil tankers, Chapter 2 of this Part.

4.1.6 Gas carriers also intended for carriage of dangerous liquid chemical cargoes in bulk are to comply with the rules for chemical carriers, Chapter 5 of this Part.

4.2 Class Notations

4.2.1 For ships to which the requirements in this Chapter applies, a notation of **"Liquefied Gas Carrier"** is to be assigned in accordance with 1.4.5 of Part I. Additional notations in respect of the following items are to be affixed in the certificate of class as appropriate:

Name of Liquefied Gas
Names of tanks.
Maximum allowable relief valve setting (MARVS).
Minimum design temperature.

4.2.2 For ships for which the survival capability as prescribed in Chapter 2 of IGC Code has been approved by the Society in accordance with 4.1.4, the ship type for survival capability and cargo tank arrangement (Type 1G, 2G, 2PG, and/or 3G) are to be included in the class notations.

4.3 Submission of Plans and Data

4.3.1 For classification surveys during construction, plans and information as may be necessary depending upon the products intended to be carried, condition of cargo stowage, construction of cargo containment system and other design conditions, are to be submitted before the work is commenced.

4.3.2 In addition to the plans required by the appropriate Chapters of the Rules, the following plans and data are to be submitted for approval.

(a) A general arrangement is to be submitted for approval giving location of:
- (i) machinery and boiler spaces, accommodation, service and control station spaces, chain lockers, cofferdams, fuel oil tanks, drinking and domestic water tanks and stores.
- (ii) cargo tanks and cargo containment systems.
- (iii) cargo pump and compressor rooms.
- (iv) cargo control rooms.
- (v) cargo piping with shore connections including stern loading/discharge arrangements and emergency cargo pumping arrangement, if fitted.
- (vi) cargo hatches, vent pipes and any other openings to the cargo tanks.
- (vii) ventilating pipes, doors and openings to cargo pump rooms, cargo compressor rooms and other gas-dangerous spaces.
- (viii) doors, air locks, hatches, ventilating pipes and openings, hinged scuttles which can be opened, and other openings to gas-safe spaces within and adjacent to the cargo area including spaces in and below the forecastle.
- (ix) entrances, air inlets and openings to accommodation, service and control station spaces.
- (x) gas-safe spaces and zones and gas-dangerous spaces and zones to be clearly identified.

(b) Plans of the cargo containment system with the following particulars are to be submitted for approval:
- (i) drawing of cargo tanks including information on non-destructive testing of welds and strength and tightness testing of tanks.
- (ii) drawings of support and staying of independent tanks.
- (iii) drawing of anti-floatation arrangement for independent tanks.
- (iv) specification on materials in cargo tanks and cargo piping systems.
- (v) specifications of welding procedures for cargo tanks.
- (vi) specification of stress relieving procedures for independent tanks type C (thermal or mechanical).
- (vii) specification of design loads and structural analysis of cargo tanks.
- (viii) a complete stress analysis is to be submitted for independent tanks, type B and type C.
- (ix) detailed analytical calculation of hull and tank system for independent tanks, type B.
- (x) specification of cooling-down procedure for cargo tanks.
- (xi) arrangement and specifications of secondary barriers, including method for periodically checking of tightness.
- (xii) documentation of model tests of primary and secondary barriers of membrane tanks.
- (xiii) drawings and specifications of tank insulation.
- (xiv) drawing of marking plate for independent tanks.

(c) Plans of the following piping systems are to be submitted for approval:
- (i) drawings and specifications of cargo and process piping including vapour piping and vent lines of safety relief valves or similar piping, and relief valves discharging liquid cargo from the cargo piping system.

(ii) drawings and specifications of offsets, loops, bends and mechanical expansion joints, such as bellows, slip joints (only inside tank) or similar means in the cargo piping.

(iii) drawings and specifications of flanges, valves and other fittings in the cargo piping system. For valves intended for piping systems with a design temperature below –55°C, documentation for leak test and functional test at design temperature (type test) is required.

(iv) complete stress analysis of piping system when design temperature is below –110°C.

(v) documentation of type tests for expansion components in the cargo piping system.

(vi) specification of materials, welding, post-weld heat treatment and non-destructive testing of cargo piping.

(vii) specification of pressure tests (structural and tightness tests) of cargo and process piping.

(viii) program for functional tests of all piping systems including valves, fittings and associated equipment for handling cargo (liquid or vapour).

(ix) specifications of control system for all quick-closing shut-off valves.

(x) drawings and specifications of insulation for low temperature piping where such insulation is installed.

(xi) specification of electrical bonding of piping.

(xii) specification of means for removal of liquid contents from cargo loading and discharging crossover headers and/or cargo hoses prior to disconnecting the shore connection.

(d) The following plans and particulars for the safety relief valves are to be submitted for approval:

(i) drawings and specifications for safety relief valves and pressure/vacuum relief valves and associated vent piping.

(ii) calculation of required cargo tank relief valve capacity.

(iii) specification of procedures for changing of set pressures of cargo tank safety relief valves if such arrangements are contemplated.

(e) Plans of electrical installations giving the following particulars are to be submitted for approval:

(i) drawing(s) showing location of all electrical equipment in gas dangerous area.

(ii) single line diagram for intrinsically safe circuits.

(iii) list of explosion protected equipment with reference to drawings together with certificates.

(f) Damage stability

The following documentation is to be submitted for approval:

(i) Preliminary damage stability calculations.

(ii) Final damage stability calculations.

(g) Other plans and data considered necessary by the Society.

4.3.3 Plans of the following equipment and systems with particulars are to be submitted:

(a) construction and specifications of pressure relief systems for hold spaces, interbarrier spaces and cargo piping if such systems are required.

(b) calculation of hull steel significant temperature when cargo temperature is below –20°C.

(c) specification of tightness test of hold spaces for membrane tank system.

(d) arrangement and specifications of means for maintaining the cargo tank vapour pressure below MARVS. (cooling plant, gas burning arrangement, etc.)

(e) drawings showing location and construction of air locks with alarm equipment
  (i) drawings of gastight bulkhead stuffing boxes
  (ii) arrangements and specifications of mechanical ventilation systems for spaces in the cargo area, giving capacity and location of fans and their motors. Drawings and material specifications of rotating parts and casings for fans and portable ventilators
  (iii) drawings and specifications of protection of hull steel beneath liquid piping where liquid leakage may be anticipated, such as at shore-connections and at pump seals
  (iv) arrangement and specifications of piping systems for gas freeing and purging of cargo tanks
  (v) arrangement of piping for inerting of interbarrier and hold spaces (not required for independent tanks type C)
  (vi) specifications of equipment for provision of dry inert gas (dry air in hold spaces containing independent tanks type C) for the maintenance of an inert atmosphere in interbarrier and hold spaces
  (vii) specification of instruments for measurement of oxygen content in inert atmospheres
  (viii) arrangement and specifications of all monitoring systems and devices for indicating liquid level, vapour pressure and temperature in the cargo tanks, interbarrier and hold spaces
  (ix) specifications of liquid level alarms
  (x) arrangement of automatic shut-down of cargo pump and compressors
  (xi) arrangement and specifications of gas detecting equipment
  (xii) location of gas sampling points within cargo tanks
  (xiii) bilge and drainage arrangements in cargo pump rooms, cargo compressor rooms, cofferdams, pipe tunnels, hold spaces and interbarrier spaces
  (xiv) drawings and specifications of inert gas plants if installed
  (xv) documentation for fire protection
  (xvi) Other plans and data considered necessary by the Society.

4.4 Special Material and Construction Requirements

4.4.1 Chapter 6 of IGC Code gives the requirements for plates, sections, pipes, forgings, casting and weldments used in the construction of cargo tanks, cargo process pressure vessels, cargo and process piping, secondary barriers and contiguous hull structures associated with the transportation of products are to meet the requirements of IGC Code Chapter 6, materials of construction.

4.4.2 Materials for low temperature service are to be manufactured, tested and inspected in accordance with the relevant requirements in Part XI. Materials with alternative chemical composition, mechanical properties, or that treatment are to be specially considered in each case.

4.4.3 For liquefied gas carriers, where low temperature cargo is carried, the grade of material for the strength deck stringer, sheer strake and bilge strake outside 0.4L amidships is to be the same as would be required within 0.4L amidships for the particular thickness. The strakes of this material are to extend beyond the end of the space containing low temperature cargoes.

4.5 Safe Access to Tanker Bows

The requirement of safe access to tanker bows as specified in 2.11 of this part is to be applied.

Chapter 5
Chemical Tanker

5.1 General

5.1.1 This Chapter applies to ships classed for the carriage in bulk of dangerous liquid chemical cargoes having an absolute vapor pressure exceeding 0.28 MPa (2.8 kgf/cm^2) at a temperature of 37.8°C, other than petroleum or similar flammable products as follows:

(a) Products having significant fire hazards in exceed of those of petroleum products and similar flammable products.

(b) Products having significant hazards in addition to or other than flammability.

5.1.2 Except otherwise provided by this Chapter, the ship's hull, machinery and equipment are generally to comply with the requirements in relevant Parts of the Rules.

5.1.3 In addition to the applicable requirements of the Rules, the ship is to comply with the requirements of the International Maritime Organization (IMO) Resolution MSC.4(48) "International Code for the Construction and Equipment of Ships Carrying Dangerous Chemicals in Bulk" (hereinafter referred to as IBC Code), adopted on 17 June 1983 and amendments in force, except that the requirements for personnel, operating and as prescribed in 5.1.4 are not within the scope of classification.

5.1.4 The following requirements of IBC Code are not classification requirement, however, in cases when the Society is authorized to issue an "International Certificate of Fitness for the Carriage of Dangerous Chemicals in Bulk" under provisions of IBC Code 1.5, and carries out surveys on behalf of an Administration, all requirements are to be applied:

2.2 Freeboard and intact stability.
2.3 Shipside discharge below the freeboard deck.
2.4 Conditions of loading.
2.5 Damage assumptions.
2.6 Location of cargo tanks.
2.7 Flooding assumptions.
2.8 Standard of damage.
2.9 Survival requirements.

5.1.5 Chemical tanker also intended for carriage of oil are to comply with the rules for oil tankers in Chapter 2 of this Part.

5.2 Class Notations

5.2.1 For ships to which the requirements in this chapter applies, a notation of **"Chemical Tanker"** is to be assigned in accordance with 1.4.5 of Part I.

5.2.2 For ships for which the survival capability as prescribed in Chapter 2 of IBC Code has been approved by the Society in accordance with 5.1.4, the ship type for survival capability and cargo tank arrangement (**type 1 ship**, **type 2 ship**, or **type 3 ship**) are to be included in the class notations.

5.3 Submission of Plans and Data

5.3.1 In addition to the plans required by the appropriate Chapter of the rules, the following plans and data are to be submitted.

(a) Full particulars of the intended cargoes, including relative density, maximum vapor pressure, stowage and operating temperature, etc., which are the governing points of the design and are required for approval of arrangements and scantling.

(b) Designed maximum contemplated cargo relative density and intended pressure/vacuum relief valve settings.

(c) Construction of cargo tank boundaries and particulars of special materials, tank linings and coatings.

(d) Plans showing the location of:

Hatches, manholes and other openings to cargo tanks. Doors, hatches, ventilation ducts and other openings to enclosed spaces used for cargo handling and spaces adjacent to cargo tanks. Doors, hatches and other openings to superstructures accommodations, store and working spaces.

(e) Particulars and arrangements of ventilation system for spaces adjacent to cargo tanks and other spaces in which hazardous vapors may collect.

(f) Details and installations of various monitoring systems, including devices for measuring the level and temperature of cargoes, pressure indicators and vapor detectors.

(g) Particulars of the cargo temperature control system and temperature distribution of structures, where appropriate.

(h) Details of testing procedure.

(i) Other plans and data considered necessary by the Society.

5.4 Safe Access to Tanker Bows

The requirements of safe access to tanker bows as specified in 2.11 of this part are to be applied.

Chapter 6

Roll on-Roll off Ships

6.1 General

6.1.1 This Chapter applies to roll on-roll off cargo ships specially designed and constructed for the carriage of vehicles, and cargoes in pallet form or in containers, and loaded/unloaded by wheeled vehicles.

6.1.2 Except otherwise provided by this Chapter, the requirements for the construction of general ships given in Part II are to be applied.

6.1.3 The requirements provide for a basic structural configuration of a multideck hull which includes a double bottom, and in some cases wing tanks up to the lowest deck. Where bulkheads are omitted, a system of partial bulkheads, web frames and deck transverses are to be fitted to provide equivalent transverse strength. Longitudinal framing is to be adopted at the strength deck and at the bottom, but special consideration is to be given to proposals for transverse framing in these regions.

6.1.4 Reference is to be made to the regulations of the International Convention for the Safety of Life at Sea, 1974 and applicable amendments.

6.2 Submission of Plans and Data

6.2.1 In addition to plans required by 1.3 of Part II, the following are to be submitted:

(a) Bow, side and stern doors.

(b) Vehicle ramps.

(c) Movable decks, if fitted, including supports or suspensions, connections to hull structure and stowing arrangements for portable components.

(d) Plans and specifications for fire alarm system, fire extinguishing system and ventilation system, where cargo spaces are intended for the carriage of vehicles with petrol in their tanks.

6.3 Deck Structure

6.3.1 Vehicle decks for the carriage of cars, trucks, etc., are to have loading resulting from the proposed storage or operation of vehicles. Details including the wheel load, axle and wheel spacing, wheel size, tire pressure and tire print dimensions for the vehicles are to be supplied by the shipbuilder.

6.3.2 Where vehicle decks are also used for the carriage of cargoes the scantlings of the deck structure are to be not less than that required by relevant Chapters. Train decks for transport of railway carriages on fixed rails are to be considered individually.

6.3.3 Deck plating

(a) The vehicle deck plate thickness is to be not less than that obtained from the following formula:

$K\sqrt{P_w} + 1.5$ mm

where:
K = Tire print load stress factor as given in Table III 6-1.
P_w = Load on the tire print, in tons.

(b) Where the necessary data is not initially available, the deck plate thickness may be estimated from the maximum as given in Table III 6-2.

Table III 6-1
Tire Print Load Stress Factor K

		a/s									
a/b	*l*/s	0.1	0.2	0.3	0.4	0.5	0.6	0.7	0.8	0.9	1.0
0.5	2.5	6.42	5.63	5.04	4.62	4.32	4.01	3.74	3.50	3.29	3.12
	1.0	6.19	5.30	4.74	4.29	3.96	3.65	3.38	3.15	2.91	2.76
1.0	2.5	6.29	5.38	4.78	4.34	3.98	3.68	3.41	3.19	2.95	2.76
	1.0	6.03	5.08	4.46	4.01	3.59	3.25	2.95	2.64	2.43	2.21
2.0	2.5	5.89	4.93	4.32	3.85	3.50	3.19	2.87	2.60	2.39	2.21
	1.0	5.63	4.60	3.90	3.35	2.91	2.52	2.16	–	–	–
3.0	2.5	5.54	4.58	3.90	2.62	3.09	2.76	2.43	2.21	–	–
	1.0	5.26	4.17	3.41	2.84	2.30	–	–	–	–	–
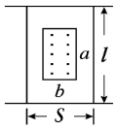		*l*, s = Spacing of beams or longitudinals a, b = Tire print dimensions a/b = Tire print ratio *l*/s = Plate panel ratio									

Note: For intermediate value of tire print ratio and plate panel ratio, the stress factor K is obtained by interpolation.

Table III 6-2
Approximate Deck Thickness for Fork Lift Trucks

Capacity of fork lift (tons)	Min. thickness (mm)
1.0	s/85
5.0	s/45
10.0	s/37
15.0	s/34
20.0	s/32
s = Beam spacing, in mm.	

Note: Interpolation method is to be used for intermediate values of fork lift trucks.

6.3.4 Deck beams and longitudinals

(a) The section modulus of deck beams or longitudinals is to be not less than that derived from the following formula:

$K\,(CK_1Pl + 0.00125K_2hsl^2)$ cm^3

where:
K = Material factor as defined in 1.5.2 of Part II.
C = 0.375 for general purpose cargo decks where fork lift trucks are to be used. 0.536 for permanent

vehicle decks in association with a value of h which need not to exceed 2.5 m.

K_1,K_2 = Factors as given in Table III 6-3.

P = Maximum axle load, in tons. Generally, P is to be taken as the total weight of vehicles divided by the number of axles. For fork lift trucks the total weight is to be applied to one axle.

l = Length of the stiffening members measured between span points, in m.

s = Spacing of stiffeners, in mm.

h = Normal load height on the deck, in m.

Table III 6-3
K_1, K_2, K_3, and K_4

Wheel spacing / Beam span	K_1	K_2	K_3	K_4
0.1	15.4	1.89	11.96	2.32
0.2	14.6	1.845	10.69	1.89
0.3	13.35	1.730	9.58	1.55
0.4	11.8	1.55	8.46	1.28
0.5	10.1	1.30	7.46	1.07
0.6	–	–	6.51	0.91
0.7	–	–	5.55	0.73
0.8	–	–	4.23	0.36
0.9	–	–	2.38	0.11
Note: Wheel spacing is measured from outer wheel to outer wheel on axles with multiple wheel arrangements.				

(b) For decks designed only for the carriage of wheeled vehicles, the section modulus is to be required that bending stress in associate with the most severe arrangement of print wheel loads on the stiffener, assuming both ends fixed, is not to exceed 100/K N/mm^2. Where K is the material factor.

6.3.5 Deck girders and transverses.

(a) Where the load on deck girders and transverse is uniformly distributed, the section modulus is to be not less than:

$4.75bhl^2$ cm^3

where:

b = Mean width of plating supported by a deck girder or transverse, in meters.

h = Normal load height on the deck, in meters.

l = Effective length of deck girder or transverse measured between span points.

(b) Where the member supports point loads, with or without the addition of uniformly distributed load. The section modulus is to be based on a stress of 123.6/K N/mm^2, assuming both ends are fixed.

6.3.6 Where wheeled vehicles are to be loaded on hatch covers, the thickness of hatch cover plating is to be not less than that required by 6.3.3, and the section modulus of stiffeners is to be not less than:

$K_3Pl + 0.00167\ K_4hsl^2$ cm^3

where:

K_3, K_4 = Factors as given in Table III 6-3.

P, *l*, s and h are defined as 6.3.4(a).

6.4 Doors in Ship's Shell

6.4.1 General

Bow doors, inner doors, side shell doors and stern doors are to be in accordance with the requirements in 13.4 and 13.5 of Part II.

Chapter 7
Fishing Ships

7.1 General

7.1.1 This Chapter applies to ships classed in accordance with the provisions in Chapter 1 of Part I and built for the purpose of fishing.

7.1.2 Except where the following modifications are required or are permissible, the requirements for the construction of general ships given in Part II are to be applied.

7.1.3 Definitions

(a) Where the freeboard assignment is not required for a fishing ship, the draft d for determining the hull scantling and the definition of the length of ship L is to be taken as 90% of the depth of ship D, unless otherwise specially noted and subject to special consideration by the Society.

(b) Position 1, Position 2 and L_f used in 7.4 of this Chapter are as defined in 17.1.2 of Part II and 1.2.10 of Part II respectively, for fishing ships for which the assignment of freeboard is not required where L_f may be substituted by L.

7.2 Decks

7.2.1 The thickness of unsheathed upper strength deck plating for vessels up to 90 meters in length is to be not less than that given by the following formula:

$0.064L + 3.7$ mm

Where the beam spacing differs from 2L + 480 mm the thickness is to be modified at the rate of 0.5 mm for every 100 mm of difference.

7.2.2 The thickness of the unsheathed upper strength deck plating at 0.1L from ends needs not exceed the following formula:

$0.025L + 4.7$ mm

7.2.3 The thickness of the unsheathed forecastle and bridge deck plating for ships up to 60 meters in length is to be not less than that given by the following formula:

$0.05L + 3.5$ mm

7.2.4 The thickness of the unsheathed poop deck plating for ships up to 70 meters in length is to be not less than that given by the following formula:

$0.05L + 3.0$ mm

But in no case to be less than 4.5 mm.

7.2.5 Where steel upper and superstructure deck is sheathed with wood planking, the thickness of steel deck plating may be 1 mm less, but in no case to be less than 4.5 mm.

7.2.6 The thickness of the wood plank on the weather deck is to be as required by 11.6 of Part II (the Rules 1997) except that for ships of 50 meters and under in length the thickness of the wood plank on the exposed superstructure deck may be of 50 mm. In way of the wood plank with excessive wear during fishing operations the thickness of the wood plank is to be increased in thickness or double wood planks to be fitted.

7.2.7 The trawl ramp of the stern trawler is to be of sufficient strength. The thickness is recommended to be not less than 12 mm. The thickness of sides of the trawl ramp is not to be less than 10% in excess that of the shell plating at ends. Doubling plates or other equivalent means are to be fitted in way of the trawl ramp which is subject to excessive wear.

7.3 Shell Plating and Bulwarks

7.3.1 In way of gallows of side trawlers the upper part of the shell plating is to be strengthened by doubling plates or other equivalent means.

7.3.2 The garbage opening is to be reinforced by inserted plates or doubling plates.

7.3.3 The thickness of the bulwark is to be not less than 5 mm for ships less than 30 meters in length and 6 mm for ships of 30 meters and over in length. In way of gallows and shrouds the thickness is to be suitably increased.

7.4 Weather Deck Hatchways and Openings

7.4.1 The height of the coaming above the upper surface of the wood deck for hatchways and openings closed by portable covers secured weathertight by tarpaulins and battening devices is not to be less than:

600 mm on upper deck
300 mm on superstructure deck

7.4.2 The thickness of the coaming plate of weather deck hatchways is to be not less than 7 mm in ships not exceeding 30 m in length and 11 mm in ships of 75 m in length and above. The thickness at the intermediate length is obtained by interpolation.

7.4.3 The finished thickness of wood hatch covers may be of 50 mm when the unsupported span is less than 1.0 m.

7.4.4 The height of the coaming of the companionway above the upper surface of the wood deck is to be not less than 450 mm in position 1 and 230 mm in position 2.

7.4.5 The height of the sill above the deck of doors in the exposed machinery casing is not to be less than:

600 mm on upper deck
300 mm on superstructure deck

7.4.6 The thickness of the steel ventilator coaming plate is to be not less than that obtained by the following formula but the thickness needs not exceed 8 mm and is not to be less than 6 mm:

$$3.0 + \frac{\phi}{32} \quad \text{mm}$$

where:

ϕ = External diameter of the ventilator coaming, in mm.

7.5 Equipment

7.5.1 The equipment may be based on the "Equipment Number", with 10% less than that determined by 25.2 of Part II.

Chapter 8
Floating Docks

8.1 General

8.1.1 This Chapter apply to steel floating docks of the caisson type, in which the bottom caisson and both wing walls are continuous and inseparable; and the pontoon type, in which wing walls are continuous and the bottom is framed of non-continuous pontoons, which are bolted to wing walls. The scantlings and arrangements of docks of other types are to be specially considered.

8.1.2 Floating docks which have been constructed in accordance with the Rules are to be assigned a service notation of **"Floating Dock"** affixed to surveying symbols or if there are no surveying symbols, affixed to classification symbols. Where floating docks are specifically approved by the Society for the carriage of objects other than ships to be repaired, such as reinforced concrete blocks to be built, the service notation is to be specially assigned accordingly.

8.1.3 Materials used for main structural members are to comply with Part XI.

8.2 Plans

8.2.1 The following plans are to be submitted for approval:

(a) General arrangement.

(b) Midship section.

(c) Structural plan of wing walls, top deck, safety deck and for pontoon type decks, the planting across the base of the wing walls in way of the pontoon gaps.

(d) Structural plan of bottom caisson or pontoons.

(e) Tank arrangement.

(f) Hydrostatic curves and stability calculations.

(g) Calculations or data for longitudinal strength, transverse and local strength including diagram showing the maximum differences in pressure between the inside and outside water over the whole docking procedure.

(h) Operating and loading instructions.

(i) Water level indicator system for tanks and drafts.

(j) Machinery and electrical installation plans.

(k) Piping systems.

(l) Fire extinguishing arrangements.

(m) Other plans, if deemed necessary.

8.3 Definitions

8.3.1 The lifting capacity is the maximum ship weight that the dock can lift and support in normal service corresponding to the minimum pontoon freeboard with all dock machinery, cranes and equipment in place, full fresh water, fuel oil for the use of the dock, compensating ballast water if required and rest-water.

8.3.2 The length L of the dock is to be measured from the aft end of the aftermost pontoon to the fore end of the forward pontoon, exclusive of end platforms or swing bridges.

8.3.3 The breadth is the molded breadth.

8.3.4 The depth is the vertical distance from the top of the keel to the top of the beam at the outer wall of the upper most deck.

8.3.5 The safety deck is a watertight deck arranged at such a height below the top deck that when all tank spaces below the safety deck are filled with water but with no load on keel blocks, the buoyancy of the space above the safety deck and the air cushion below the safety deck, if any, is sufficient to keep the dock afloat and to have a freeboard as required in 8.4.1, hereinafter.

8.3.6 Rest-water is ballast water in tanks which pumps cannot discharge.

8.3.7 Compensating ballast water is ballast water which may be used to control the deflection of the dock under longitudinal bending. Rest-water is not included in compensating ballast water.

8.4 Freeboards and Stability

8.4.1 The safety freeboard from the upper edge of the top deck of the completely immersed dock is generally not to be less than 1 m.

8.4.2 The freeboard to the top of the pontoon deck at the centerline of the dock when supporting a ship whose displacement is the lifting capacity is generally to be not less than 300 mm. The freeboard at side is to be such that when both cranes are moved to the forward or after end of the dock, the side of the pontoon deck at the ends of the dock is not to be submerged.

8.4.3 Stability calculations for the dock in the various operating conditions are to be submitted. The results of these calculations are to be shown in the form of curves over the whole docking procedure. The GM of the ship-dock unit after all corrections have been made is generally not to be less than 1.0 m.

8.4.4 The operating instructions for the dock are to include preferably in the form of curves, data giving a range of ship weights and the associated ship centers of gravity that would result in the ship-dock unit complying with the foregoing stability requirements.

8.5 Longitudinal Strength

8.5.1 The longitudinal strength of the dock is to be calculated for the condition when the dock supports the shortest ship anticipated to be docked whose displacement is equal to the lifting capacity of the dock. Generally the length between perpendiculars of the shortest ship may be assumed to be 80% that of the length of the dock.

8.5.2 Where it is intended that the normal operation of the dock is to be with ballast water evenly distributed over its entire length, the bending stress in the bottom or deck is not to exceed 138 N/mm^2.

8.5.3 Where it is intended that the normal operation of the dock is to be by the compensating ballast water available, the bending stress with the water ballast suitably distributed is to be in accordance with 8.5.2 above and in addition, the section modulus of the dock is to be not less than that required to ensure that the bending stress does not exceed 216 N/mm^2 when the ballast water of the same amount used in the foregoing condition is evenly distributed over the length of the dock.

8.5.4 Where the dock is to be towed in open waters, the total permissible stress en route is not to exceed 177 N/mm^2. The length of wave to be assumed is to be equal to the length of the dock, and the wave height is to be assumed equal to the maximum height to be expected during the voyage in tow.

8.5.5 The scantlings of members included in the midship section modulus calculations are to extend over the midship 0.4L of the dock and gradually tapered beyond the 0.4L. For the pontoon type dock material of pontoon lying between the lines of the inner walls is not included in the modulus calculation. At the section in way of the gap between pontoon all continuous fore and aft material of the wing walls structure may be included together with the horizontal plate across the base of the outer and inner walls, provided this plate extends longitudinally at least 2 m over each pontoon.

8.5.6 Two completely independent deflection meters, preferably of different types, are to be fitted. On very small docks, alternative proposals for ensuring stress limitation will be considered. The maximum allowable deflection is indicated such that the corresponding longitudinal bending stress is not to exceed 138 N/mm^2.

8.6 Transverse Strength

8.6.1 Bending moments and shearing forces are to be calculated with the assumption that there is one line of center keel blocks support only. The load on keel blocks is to be the maximum permissible load per meter length of dock specified in the operating instructions and is to be not less than that obtained with the shortest ship anticipated to be docked as specified in 8.5.1 above and having displacement equal to the lifting capacity of the dock. Under the foregoing loading conditions the compressive or tensile stress as computed is not to exceed 157 N/mm^2. The shear stress is not to exceed 98 N/mm^2.

8.6.2 The transverse strength of the dock is also to be considered with the dock emerged to that draft which gives the maximum difference in pressure between the inside and outside water over the whole docking procedure.

8.7 Local Strength

8.7.1 The tank or shell plating, stiffeners or framing and other structural members are to be taken as Part II with the following heads to be used:

(a) For ballast tanks the head is to be the maximum expected due to unequal filling of the tanks in service, or where air pipes projected into the ballast tanks, the head corresponding to the maximum pressure in the air cushion, but at least the vertical distance from the tank crown to the maximum immersion waterline, in m.

(b) For all other tanks the head is to be the vertical distance to a point located 1/2 of the distance from the top of the tank to the top of the overflow, to the maximum immersion waterline, or 2.5 m, whichever is the greatest, in m.

(c) For void spaces and cofferdams the head is to be the vertical distance from the member being considered to the maximum immersion waterline but at least 2.5 m.

8.7.2 The thickness of the top deck plating for the 0.4L amidships is to be as required for the longitudinal strength. For 0.1L at each end of the dock, the thickness is to be not less than:

$$6.5 + \left(1 + 0.03\frac{s - 610}{25}\right) \qquad \text{mm}$$

where:
s = Spacing of longitudinals, in mm.
For intermediate lengths the thickness of the deck is to be of proportionate values.

8.7.3 The scantlings of top deck longitudinals for the 0.4L amidships is to be as required for longitudinal strength but are not to be less than that for longitudinals at ends. For 0.1L at each end of the deck, the scantlings of longitudinals are to be such that the stress under a loading of 14.2 kN/m^2 does not exceed 132 N/mm^2. The scantlings of the longitudinals in the intermediate length are to be intermediate between those required for the middle and end portions.

8.7.4 The thickness of non-watertight bulkheads and girders in pontoons is to be at least 7.5 mm. Stiffeners are to be spaced not more than 1500 mm apart.

8.7.5 The loading on platforms extending from ends of the dock is generally to be assumed as 5.88 kN/m^2.

8.7.6 The loading on swing bridges at ends of the dock is generally to be assumed as 3.4 kN/m^2.

8.7.7 The total weight of cranes and the arrangement of wheels and rails, are to be taken into consideration in determining the crane foundation and indicated on the plans.

8.7.8 All structural panels and members are to be adequately stiffened to prevent buckling.

8.8 Tests

8.8.1 All ballast tanks are to be hose tested. The water pressure in the hose is not to be less than 0.2 N/mm^2. On submission of all necessary details, air testing may be considered as an alternative to the foregoing. All other tanks and cofferdams are to be separately tested by a head of water of 2.45 m or by a head of water to the overflow or to the maximum immersion waterline, whichever is the greatest.

8.8.2 Immersion tests are to be carried out upon completion of the dock to ascertain freeboards, the dock lightweight and the lifting capacity of the dock.

8.9 Machinery and Electrical Installation

8.9.1 Machinery such as boilers, pressure vessels, auxiliary engines, compressors, pumps, etc., essential to the operation of the floating dock are to be constructed and installed in general accordance with the relevant requirements of the Rules.

8.9.2 Pumping arrangements and piping systems are to be provided in accordance with Part VI so far as they may be applicable to floating docks. Arrangements for discharging water ballast are to be such that not less than 2 pumps are available for pumping out each ballast compartment.

8.9.3 The electrical plant is to be constructed in general with the requirements of Part VII.

8.10 Fire Extinguishing Arrangements

8.10.1 Fire extinguishing arrangements are to be in accordance with the requirements of Part IX as they are applicable.

8.11 Surveys

8.11.1 The general requirements for the survey of steel ships given in Part I are to be applied except otherwise provided by the followings.

8.11.2 In order to maintain the class, the floating dock is to be subjected to the following surveys:

(a) Biennial Survey.

(b) Periodical Special Survey.

(c) Occasional Survey.

8.11.3 A Biennial Survey is to be carried out at 2-year intervals within 3 months either way of each due date after the date of build or the date of completion of the previous Class Renewal Survey. The requirement of Biennial Survey are in general as those required for Annual Survey of steel ships given in Chapter 2 of Part I so far as they are applicable to floating docks and in general is need not to be docked.

8.11.4 A Class Renewal Survey is to be carried out 4-year after the date of build and thereafter 4 years from the date of the completion of the previous Class Renewal Survey. The requirements of the Class Renewal Survey are in general as those required for Class Renewal surveys of steel ships given in Chapter 2 of Part I so far as they are applicable to floating docks except that at the discretion of the Society docking may be waived according to the actual condition of the floating dock.

8.11.5 An Occasional Survey is to be carried out:

(a) When the floating dock has sustained damage or undergoes major repairs or alterations. In the case of alterations, plans are to be submitted and approved by the Society before the work is commenced.

(b) When requested by the Owner.

(c) When the Society considers necessary.

Chapter 9

Steel Barges

9.1 General

9.1.1 This Chapter applies to non-self-propelled barges classed in accordance with the provisions in Chapter 1 of Part I and intended to be towed or pushed.

9.1.2 Except otherwise provided in the Chapter, the requirements given in Part II are to be applied.

9.1.3 Barges built for the carriage of special cargo or of novel design in respect of the hull, piping or equipment are to be subject to special consideration.

9.1.4 Existing barges which have not been built under the supervision of the Surveyors to the Society, but are submitted for classification, are to be subject to a special classification survey.

9.1.5 Barges built in accordance with the Rules are to be assigned a ship type notation of **Barge** and a non-self-propelled notation **NSP** affixed to surveying or classification symbols, e.g. "**CR 100 ✠ Barg**e..." and "**CMS ✠ NSP**".

9.2 Longitudinal Strength

9.2.1 Barges of 100 m or more in length intended to be classed for services other than harbour use are to have longitudinal strength in accordance with the requirements of Chapter 3 of Part II, but the midship section modulus may be 5% less than that required by 3.2 of Part II.

9.2.2 Barges of less than 100 m in length are to have the midship section modulus not less than that obtained from the following formula:

$SM_0 = f\,B\,(C_b + 0.7)\,10^{-2}$

where :

SM_0	=	Midship section modulus, in cm^2-m.
f	=	$13.6L^2 - 683.4L + 11400$
C_b	=	The molded block coefficient at load draught.
B	=	Breadth of ship, in m.
L	=	Length of ship, in m.

9.3 Single Bottoms

9.3.1 In general the single bottom is to be constructed in accordance with Chapter 4 of Part II, except otherwise provided in this Chapter.

9.3.2 Center keelsons

(a) Depth of center keelsons:

d = 45B

(b) the minimum thickness of vertical plates and horizontal top plates within 0.4L amidships:

t = 0.064L + 5.0

The plate thickness may be reduced by 10% at ends.

(c) The sectional area of horizontal top plates amidships:

A = 0.7L + 5.0

(d) The notations used in 9.3.2(a) to (c) above are defined as follows:

d	=	Depth of center keelson, in mm.
t	=	Plate thickness, in mm.
B	=	Breadth of ship, in m.
L	=	Length of ship, in m.
A	=	Sectional area of horizontal top plate, in cm^2.

9.3.3 Side keelsons

(a) The Minimum thickness of vertical plates and face plates within 0.4L amidships:

t = 0.047L + 4.7

The plate thickness may be reduced by 10% at ends.

(b) The sectional area of face plates amidships:

A = 0.18L + 5.3

(c) The notations used in 9.3.3(a) and (b) above are defined as follows:

t	=	Plate thickness, in mm.
L	=	Length of ship, in m.
A	=	Sectional area of face plate, in cm^2.

9.4 Double Bottoms

9.4.1 In general double bottoms are to be constructed in accordance with Chapter 5 of Part II except otherwise provided in this Chapter.

9.4.2 The thickness of solid floor plates is to be obtained from the following formula:

(a) Longitudinally framed barges:

t = 0.047L + 4.6

(b) Transversely framed barges:

$t = 0.036L + 4.9$

(c) Tank end floors:

$t = 0.047L + 6.1$

(d) The notations used in 9.4.2(a) to (c) above are defined as follows:

t = Thickness of floor plate, in mm.
L = Length of ship, in m.

9.4.3 For barges intended for the carriage of bulk or ore cargo, the requirements given in 1.4 of this Part are to apply.

9.5 Frames

9.5.1 The scantlings of frames for dry cargo barges are to be determined according to Chapter 6 of Part II and the scantlings of frames for oil barges are determined according to Chapter 2 of this Part.

9.6 Shell Plating

9.6.1 The thickness of the shell plating is neither to be less than that required for the purpose of longitudinal strength in accordance with 9.2 of this Chapter nor that required in the following.

9.6.2 Side shell plating

The minimum thickness of the side shell plating is to be obtained from the following formula:

(a) For the midship 0.4L with longitudinal framing:

$$t = 0.00138s\sqrt{L} + 2.0$$

(b) For the midship 0.4L with transverse framing:

$$t = 0.00138s\sqrt{L} + 2.5$$

(c) Side shell plating at ends:

$$t = 0.0014s\sqrt{L} + 3.0$$

(d) In general, the thickness of the sheer strake is to be of the thickness of the deck stringer plate or the thickness of the adjacent side shell plating whichever is the greater.

(e) The notations used in 9.6.2(a) to (c) above are defined as follows:

t = Thickness of side shell plating, in mm.
s = Frame spacing, in mm.
L = Length of ship, in m.

9.6.3 Bottom shell plating

The minimum thickness of the bottom shell plating is to be obtained from the following formula:

(a) For midship 0.4L with longitudinal framing:

$$t = 0.0011s\sqrt{L} + 3.7$$

(b) For midship 0.4L with transverse framing:

$$t = 0.0011s\sqrt{L} + 4.45$$

(c) Bottom plating forward for 0.2L from the fore end

$$t = 0.0013s\sqrt{L} + 4.4$$

(d) The notations used in 9.6.3(a) to (c) above are defined as follows:

t = Thickness of bottom shell plating, in mm.
s = Frame spacing, in mm.
L = Length of ship, in m.

9.6.4 Immersed bow plating

Where the bow is of ship-shape form, the thickness of the plating below the waterline for 0.15L from the stem is to be not less than that obtained from the following formula:

$$t = 0.0013s\sqrt{L} + 3.3$$

where:

t = Plate thickness, in mm.
s = Frame spacing, in mm.
L = Length of ship, in m.

9.6.5 The thickness of the short superstructure side plating is to be obtained from the following formula:

$$t = 0.00095s\sqrt{L} + 3.0$$

where:

t = Thickness of super structure side plating, in mm.
s = Frame spacing, in mm.
L = Length of ship, in m.

9.7 Beams and Deck Longitudinals

9.7.1 The scantlings of beams and deck longitudinals for dry cargo and oil barges are to be determined according to Chapter 9 of Part II and 2.3 of this Part respectively.

9.8 Deck Girders and Pillars

9.8.1 The scantlings of deck girders for dry cargo and oil barges are to be determined according to Chapter 10 of Part II and 2.3 of this Part respectively.

9.8.2 The sectional area of pillars, is to be determined according to 10.6 of Part II.

9.9 Decks

9.9.1 The thickness of the deck plating within the 0.4L amidships is neither to be less than that required for purpose of longitudinal strength nor that obtained from the following formula.

9.9.2 Deck plating amidships

(a) For decks on transverse beams:

$t = 0.012\,s + 1.0$ when $s \leq 700$
$= 0.0053\,s + 6.0$ when $s > 700$

(b) For decks on longitudinal beams:

$t = 0.012\,s + 0.5$ when $s \leq 700$
$= 0.0054\,s + 5.4$ when $s > 700$

9.9.3 Deck plating amidships inside the line of opening

$t = 0.01\,s + 0.9$ when $s \leq 760$
$= 0.0067\,s + 3.4$ when $s > 760$

9.9.4 Deck stringer amidships

(a) Thickness of deck stringer plate:

$t = 0.018L + 7.0$

(b) Breadth of deck stringer plate:

$b = 8L + 30$

9.9.5 Platform deck
Thickness of platform deck plating:

$t = 0.007s + 1.0$

9.9.6 The notations used in 9.9.2 to 9.9.5 above are defined as follows:
t = Plate thickness, in mm.
s = Beam spacing, in mm.

b = Breadth of deck stringer plate, in mm.
L = Length of ship, in m.

9.10 Watertight Bulkheads and Tank Bulkheads

9.10.1 All barges are to be fitted with a collision bulkhead located not less than 0.05L abaft the forward perpendicular at any point. A watertight bulkhead is to be fitted at the aft end of the hold region. Other watertight bulkheads are to be fitted as necessary to provide transverse strength and subdivision.

9.10.2 The scantlings of watertight bulkheads, collision bulkheads and tank bulkheads are to be determined according to Chapters 14, 16 of Part II and 2.7 of this Part.

9.10.3 The scantlings of non-watertight centerline bulkheads in cargo space are to be determined according to Chapter 15 of Part II.

9.11 End Constructions

9.11.1 For barges which have normal ship-shape fore and aft ends, the scantlings of structural members are to be determined according to Chapter 2 and 8 of Part II.

9.11.2 Where barges are always operating without appreciable trim, relaxation from the requirements concerning strengthening of bottom forward may be admitted.

9.11.3 Where barges have raked ends with flat bottom, at least one centre keelson and one side keelson on each side are to be fitted and effectively connected with the midship structure. The keelsons are to be spaced not more than 4.5 m apart.

9.11.4 Where the bottom is of longitudinal construction, floors are to be spaced not more than 2.5 m apart.

9.11.5 The scantlings of deck, side and bottom structure members are to be determined in accordance with the respective chapters of Part II.

9.11.6 Where trusses and stanchions are used for the support of frames. The sectional areas are to be determined according to 10.6 of Part II.

9.12 Hatchways and Other Closing Appliances

For barges for services than harbour use, the requirements given in Chapters 17, 21 and 22 of Part II are to apply.

9.13 Equipment

9.13.1 For manual barges, the equipment of anchors, chains and ropes is to be determined according to Chapter 25 of Part II.

9.13.2 Where more than two anchors are prescribed, the spare anchor may be used as stern anchor.

9.13.3 For unmanned barges, a reduced equipments as compared with the equipment required may be admitted.

Chapter 10
Navigation in Ice

10.1 General

10.1.1 Application

(a) The classification and surveying symbols are followed by the notation **Ice Class** if the scantling of hull, power of propulsion engine and the machinery and equipment arrangements given in this Chapter have been complied with.

(b) The requirements in this Chapter are embodied for the ice strengthened ships which are intended to navigate in ice. If ships are intended to navigate in ice-infested polar waters, they are to be in compliance with the requirements of Chapter 10A.

10.1.2 Classification of Ice Class

(a) The notation, **Ice Class**, is classified into the following four ice classes in this chapter:
(i) class **IAS**
(ii) class **IA**
(iii) class **IB**
(iv) class **IC**

(b) The scantling of hull, power of propulsion engine and the machinery and equipment arrangements which are complied with the requirements specified in this Chapter, ice class annotation will be affixed to the notation, Ice Class, e.g. **Ice Class IAS**.

10.1.3 Additional description in drawing

(a) Ice belt, LWL and BWL defined in 10.4.2 and 10.2.1 are to be shown in the Shell Expansion.

(b) The power of propulsion engine defined in 10.3.1, the displacement defined in 10.2.3 and the power necessary for propulsion engine required in 10.3.2 or 10.3.3 are to be indicated in the General Arrangement.

10.2 Max. and Min. Draught

10.2.1 LWL and BWL

The line defined by the max. draughts fore, amidships and aft will be referred to as LWL(Load water Line). The line defined by the min. draughts fore and aft will be referred to as BWL(Ballast Water Line).

10.2.2 Max. draught

(a) The max. ice class draught amidships is to be the draught on the Fresh Water Load Line in Summer. If the ship has a timber load line, the Fresh Water Timber Load Line in Summer is to be used.

(b) The draught and trim, limited by the LWL, must not be exceeded when the ship is navigating in ice. The salinity of the sea water along the intended route is to be taken into account when loading the ship.

10.2.3 Min. draught

(a) The ship is always to be loaded down at least to the BWL when navigating in ice. Any ballast tank, situated above the BWL and needed to load down the ship to this water line, is to be equipped with devices to prevent the water from freezing.

(b) In determining the BWL, regard is to be paid to the need for ensuring a reasonable degree of ice-going capacity in ballast. The propeller is to be fully submerged, if possible entirely below the ice. The forward draught is to be at least:

$(2+0.00025\Delta)\ h_o$ m
but need not exceed $4\ h_o$,

where :
Δ = displacement of the ship in tons, on the max. ice class draught according to 10.2.2.
h_o = level ice thickness in m, according to Table III 10-1.

Table III 10-1
Level Ice Thickness

Ice class	h_o (m)
IAS	1.0
IA	0.8
IB	0.6
IC	0.4

10.3 Power of Propulsion Engines

10.3.1 Definition

(a) The power of propulsion engine P_E is the max. continuous output of engine. If the output of the engine is restricted by technical means or by any regulations applicable to the ship, P_E is to be taken as the restricted output.

(b) The power of propulsion engine is not to be less than that determined by the formula below and in no case less than 1,000 KW for ice class **IA**, **IB** and **IC**, and not less than 2,800 KW for **IAS**.

(c) The dimensions of the ship and some other parameters are defined below and shown as Fig. III 10-1:
L = Length of the ship between the perpendiculars, in m.
L_{BOW} = Length of the bow, in m.
L_{PAR} = Length of the parallel midship body, in m.
B = Maximum breadth of the ship, in m.

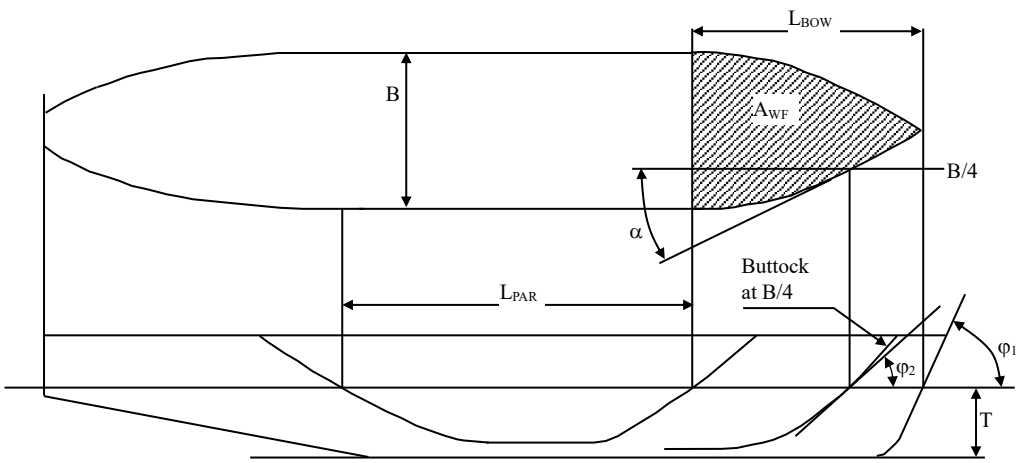

T	=	Actual ice class draughts of the ship, in m, according to 10.3.2.
A_{wf}	=	Area of the waterline of the bow, in m^2.
α	=	The angle of the waterline at B/4, in degrees.
φ_1	=	The rake of the stem all the centerline, in degrees, if ship with bulbous bow $\varphi_1 = 90°$.
φ_2	=	The rake of the bow at B/4, in degrees.
D_p	=	Diameter of the propeller, in m.
H_M	=	Thickness of the brash ice in mid channel, in m.
H_F	=	Thickness of the brash ice layer displaced by the bow, in m.

Fig. III 10-1
Dimensions and Parameters

10.3.2 New ship

(a) The power of propulsion engine requirement is to be calculated for the max. draught amidships referred to as LWL and the min. draught referred to as BWL, as defined in 10.2. But L and B are to be determined only at the LWL. The power of propulsion engine is not to be less than the greater of these two outputs.

$$P_E = K_e \frac{\left(\frac{R_{CH}}{1000}\right)^{\frac{2}{3}}}{D_P} \qquad \text{kW}$$

where:
K_e = Constant is to be taken as Table III 10-2.

Table III 10-2
Value of K_e

Propeller type or machinery	CP or electric or hydraulic propulsion machinery	FP propeller
1 propeller	2.03	2.26
2 propellers	1.44	1.60
3 propellers	1.18	1.31

R_{CH} = the resistance of the ship in a channel with brash ice and a consolidated layer, in N,

$$= C_1 + C_2 + C_3 C_\mu (H_F + H_M)^2 (B + C_\Psi H_F) + C_4 L_{PAR} H_F^2 + C_5 \left(\frac{LT}{B^2}\right)^3 \frac{A_{wf}}{L}$$

C_1 = $f_1 \dfrac{BL_{PAR}}{2\left(\frac{T}{B}\right) + 1} + (1 + 0.021\varphi_1)(f_2 B + f_3 L_{BOW} + f_4 B L_{BOW})$ for ice class **IAS**.

= 0, for ice class **IA**, **IB** and **IC**.

C_2 = $(1 + 0.063\varphi_1)(g_1 + g_2B) + g_3\left(1 + 1.2\frac{T}{B}\right)\frac{B^2}{\sqrt{L}}$ for ice class **IAS**.
= 0, for ice class **IA**, **IB** and **IC**.
C_μ = $0.15\cos\varphi_2 + \sin\Psi\sin\alpha$, C_μ is to be taken equal or larger than 0.45.
C_Ψ = $0.047\Psi - 2.115$,
= 0, if $\Psi \leq 45°$.
H_F = $0.26 + (H_M B)^{0.5}$
H_M = 1.0 for ice classes **IA** and **IAS**,
= 0.8for ice class **IB**,
= 0.6 for ice class **IC**.
C_3 = 845 $kg/(m^2 s^2)$
C_4 = 45 $kg/(m^2 s^2)$
C_5 = 825 kg/s^2
f_1, f_2, f_3, f_4, g_1, g_2 and g_3 = values is to be taken as Table III 10-3.
Ψ = $\arctan\left(\frac{\tan\varphi_2}{\sin\alpha}\right)$ degrees

$\left(\frac{LT}{B^2}\right)^3$ is not to be taken as less than 5 and not to be taken as more than 20.

Table III 10-3
Value of f_1, f_2, f_3, f_4, g_1, g_2 and g_3

$f_1 = 23$	N/m^2	$g_1 = 1530$	N
$f_2 = 45.8$	N/m	$g_2 = 170$	N/m
$f_3 = 14.7$	N/m	$g_3 = 400$	$N/m^{1.5}$
$f_4 = 29$	N/m^2		

(b) The ranges of parameters used in the validation of the above formulae are shown in Table III 10-4. If any of the ships parameters are outside these ranges of validity, other methods for determining R_{CH} are to be used as specified in 10.3.4. When calculating the parameter D_p / T, T is to be measured on the LWL.

Table III 10-4
Ranges of Ship Parameters

Parameter		Minimum	Maximum
α	degree	15	55
φ_1	degree	25	90
φ_2	degree	10	90
L	m	65.0	250.0
B	m	11.0	40.0
T	m	4.0	15.0
L_{BOW}/L		0.15	0.40
L_{PAR}/L		0.25	0.75
D_p/T		0.45	0.75
$A_{wf}/(LB)$		0.09	0.27

10.3.3 Existing Ship

(a) Existing ships of ice class **IAS** and **IA**

(i) For ships of ice class **IAS** and **IA** which are keel laid before 1 September 2003, is to be complied with the requirement as specified in 10.3.2 at the following dates, whichever occurs the latest.

(1) 1 January 2005 or

(2) 1 January in the year when 20 years has elapsed since the year the ship was delivered.

(ii) When values for some of the hull form parameters required for the calculating method in 10.3.2 are difficult to obtain, the following alternative formulae for determining R_{CH} can be used:

$$R_{CH} = C_1 + C_2 + C_3(H_F + H_M)^2(B + 0.658H_F) + C_4LH_F^2 + C_5\left(\frac{LT}{B^2}\right)^3\frac{B}{4}$$

where:

C_1 = $f_1\dfrac{BL}{2\left(\frac{T}{B}\right)+1} + 1.84(f_2B + f_3L + f_4BL)$ for ice class **IAS** and ship without bulbous bow,

= $f_1\dfrac{BL}{2\left(\frac{T}{B}\right)+1} + 2.89(f_2B + f_3L + f_4BL)$ for ice class **IAS** and ship with bulbous bow,

= 0, for ice class **IA**.

C_2 = $3.52(g_1 + g_2B) + g_3\left(1 + 1.2\dfrac{T}{B}\right)\dfrac{B^2}{\sqrt{L}}$ for ice class **IAS** and ship without bulbous bow,

= $6.67(g_1 + g_2B) + g_3\left(1 + 1.2\dfrac{T}{B}\right)\dfrac{B^2}{\sqrt{L}}$ for ice class **IAS** and ship with bulbous bow,

= 0, for ice class **IA**.

C_3 = 460 $kg/(m^2 s^2)$

C_4 = 18.7 $kg/(m^2 s^2)$

C_5 = 825 kg/s^2

f_1, f_2, f_3, f_4, g_1, g_2 and g_3 = values are to be taken as Table III 10-5.

$\left(\frac{LT}{B^2}\right)^3$ is not to be taken as less than 5 and not to be taken as more than 20.

Table III 10-5
Values of f_1, f_2, f_3, f_4, g_1, g_2 and g_3

f_1=10.3	N/m^2	g_1=1530	N
f_2=45.8	N/m	g_2=170	N/m
f_3=2.94	N/m	g_3=400	$N/m^{1.5}$
f_4=5.8	N/m^2		

(b) For existing ship of ice class **IB** and **IC** which are keel laid before 1 September 2003, the power of propulsion engine is to be determined by the following formulae and in no case less than 740 kW.

$P_E = f_1 \cdot f_2 \cdot f_3 \cdot (f_4 \cdot \triangle + P_{E0})$ kW

where :

f_1 = 1.0, for a fixed pitch propeller,

= 0.9, for a controllable pitch propeller.

f_2 = $(\varphi_1/200) + 0.675$, but not more than 1.1,

= 1.1, for a bulbous bow.

f_3 = $1.2B/\triangle^{1/3}$, but not less than 1.0.

f_4 and P_{E0} = Values are to be taken as Table III 10-6.

$\triangle$ = Displacement, in t, of the ship on the max. draught according to 10.2.2. It needs not be taken greater than 80,000 t.

The product of f_1 f_2 is not to be taken as less than 0.85.

Table III 10-6
Values of f_4 and P_{E0}

Ice class	**IB**	**IC**	**IB**	**IC**
Displacement	△ < 30000		△ ≥ 30000	
f_4	0.22	0.18	0.13	0.11
P_{E0}	370	0	3,070	2,100

10.3.4 Other methods of determining K_e or R_{CH}

(a) For individual ship, in lieu of the K_e or R_{CH} values defined in 10.3.2 and 10.3.3, the use of K_e values based on more exact calculations or R_{CH} values based on model tests may be approved. Such an approval will be given on the understanding that it can be revoked if experience of the ship's performance in practice motivates this.

(b) The design requirement for ice classes is a min. speed of 5 knots in the following brash ice channels:

IAS: H_M = 1.0 m and a 0.1 m thick consolidated layer of ice.

IA: H_M = 1.0 m

IB: H_M = 0.8 m

IC: H_M = 0.6 m

10.4 Reinforcement of Hull Structures

10.4.1 General

(a) The frame spacing and spans defined in the following requirements are to be measured in a vertical plane parallel to the centerline of the ship. However, if the ship's side deviates more than 20° from this plane, the frame distances and spans are to be measured along the side of the ship.

(b) Side scuttles are not to be situated in the ice belt as defined in 10.4.2. If the weather deck in any part of the ship is situated below the upper limit of the ice belt (e.g. in way of the well of a raised quarter deck), the bulwark is to be given at least the same strength as is required for the shell in the ice belt. The strength of the construction of the freeing ports is to meet the same requirements.

(c) An ice-strengthened ship is assumed to operate in open sea conditions corresponding to a level ice thickness not exceeding h_o, as defined in 10.2.3. The design height h of the area actually under ice pressure is, however, assumed to be less than h and given in Table III 10-7.

Table III 10-7
The Design Ice Pressure Height

Ice class	h (m)
IAS	0.35
IA	0.30
IB	0.25
IC	0.22

10.4.2 Areas to be strengthened

(a) Areas which are to be strengthened are shown in Fig. III 10-2.

(i) Forward region

From the stem to a line parallel to and 0.04L aft of the forward borderline of the part of the hull where the water lines run parallel to the centerline. For ice class **IAS** and **IA** the overlap over the borderline need not exceed 6 meters, for ice class **IB** and **IC** this overlap need not exceed 5 meters.

(ii) Midship region

From the aft boundary of the Forward region to a line parallel to and 0.04L aft of the aft borderline of the part of the hull where the water line run parallel to the centerline. For ice classes **IAS** and **IA** the overlap over the borderline need not exceed 6 meters, for ice classes **IB** and **IC** this overlap need not exceed 5 meters.

(iii) Aft region

From the aft boundary of the midship region to the stern.

(b) other shell plating

(i) Fore foot (for ice class **IAS** only):

The shell plating below the ice belt from the stem to a position five main frame spaces abaft the point where the bow profile departs from the keel line.

(ii) Upper forward ice belt (for ice classes **IAS** and **IA** and with open water service speed ≥ 18 knots only):

The shell plate from the upper limit of the ice belt to 2 meters above it and from the stem to a position at least 0.2L abaft the forward perpendiculars.

(iii) The vertical extension of the Forward, midship and Aft regions is to be determined from Table III 10-8.

L is to be taken as the definition as specified in 1.2.1 of Part II

Table III 10-8
Vertical Extension of Ice Belt

Ice Class	Above LWL (m)	Below BWL (m)
IAS	0.6	0.75
IA	0.5	0.6
IB	0.4	0.5
IC	0.4	0.5

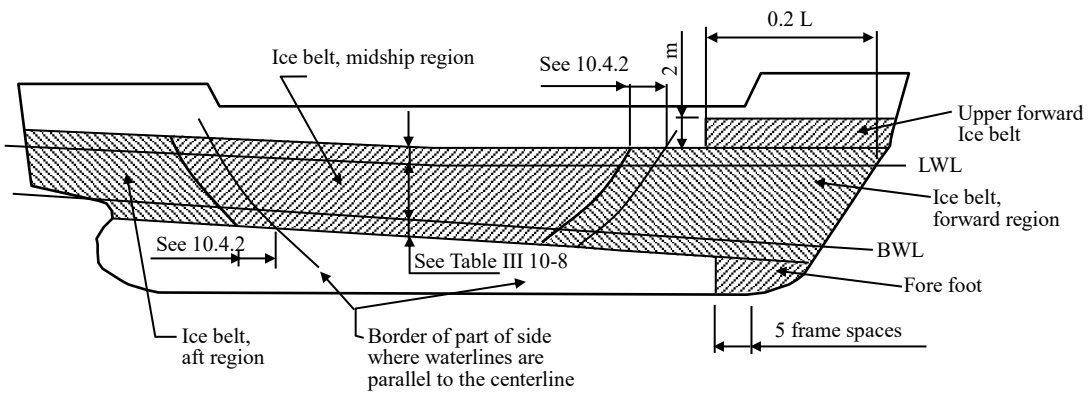

Fig. III 10-2
Regions and Shell Plating

10.4.3 Ice pressure

The design ice pressure is determined by the formula:

$p = c_d \cdot c_1 \cdot c_a \cdot p_o$ MPa

where :

c_d = A factor which takes account of the influence of the size and engine output of the ship. It is calculated by the formula:

$$= \frac{a \cdot k + b}{1000}$$

$$k = \frac{\sqrt{\Delta P_E}}{1000}$$

a and b are given in the following Table III 10-9:

Table III 10-9
Values of a and b

	Region			
	Forward		Midship & Aft	
	k ≤ 12	k > 12	k ≤ 12	k > 12
a	30	6	8	2
b	230	518	214	286

Δ = The displacement of the ship at maximum ice class draught, in t.

P_E = The actual continuous engine output of the ship, in kW.

c_1 = A factor which takes account of the probability that the design ice pressure occurs in a certain region of the hull for the ice class in question.

The value of c_1 is given in the following Table III 10-10.

Table III 10-10
Value of C_1

Ice Class	Region		
	Forward	Midship	Aft
IAS	1.0	1.0	0.75
IA	1.0	0.85	0.65
IB	1.0	0.70	0.45
IC	1.0	0.50	0.25

C_a = A factor which takes account of the probability that the full length of the area under consideration will be under pressure at the same time. It is calculated by the formula:

$$C_a = \frac{47 - 5l_a}{44} \quad \text{maximum } 1.0; \text{minimum } 0.6$$

P_o = the nominal ice pressure; the value 5.6 MPa is to be used.

l_a is to be taken as following Table III 10-11:

Table III 10-11
Value of l_a

Structure	Type of framing	l_a (m)
Shell	Transverse	Frame space
	Longitudinal	2 frame spaces
Frames	Transverse	Frame space
	Longitudinal	Span of stringer
Ice stringer		Span of stringer
Web frame		2 web frame spaces

10.4.4 Shell plating thickness

(a) The shell plating in way of fore foot, as defined in 10.4.2, is to have at least the thickness required in the midship region.

(b) The shell plating in way of upper forward ice belt, as defined in 10.4.2, is to have at least the thickness required in the midship region. A similar strengthening of the bow region is advisable also for a ship with a lower service speed, when it is, e.g. on the basis of the model tests, evident that the ship will have a high bow wave.

(c) Plate thickness in the ice belt

For transverse framing the thickness of the shell plating is to be determined by the formula:

$$t = 667s\sqrt{\frac{f_1 \cdot P_{PL}}{\sigma_y}} + t_c \qquad \text{mm}$$

For longitudinal framing the thickness of the shell plating is to be determined by the formula:

$$t = 667s\sqrt{\frac{P_{PL}}{f_2 \cdot \sigma_y}} + t_c \qquad \text{mm}$$

where :

s	=	The frame spacing, in m.
P_{PL}	=	0.75 p in MPa.
p	=	As given in 10.4.3.
f_1	=	$1.3 - \frac{4.2}{\left(\frac{h}{s} + 1.8\right)^2}$ maximum 1.0.
f_2	=	$0.6 + \frac{0.4}{\frac{h}{s}}$ when $\frac{h}{s} \leq 1$.
	=	$1.4 - 0.4 \cdot (h/s)$ when $1 \leq h/s < 1.8$.
h	=	As given in Table III 10-7.
σ_y	=	Yield stress of the material, in N/mm^2.
t_c	=	Increment for abrasion and corrosion, in mm; normally t_c is to be 2 mm; if a special surface coating, by experience shown capable to withstand the abrasion of ice, is applied and maintained, lower values may be approved.

10.4.5 Side frames

(a) Within the ice-strengthened area all frames are to be effectively attached to all the supporting structures. A longitudinal frame is to be attached to all the supporting web frames and bulkheads by brackets. When a transversal frame terminates at a stringer or deck, a bracket or similar construction is to be fitted. When a frame is running through the supporting structure, both sides of the web plate of the frame are to be connected to the structure (by direct welding, collar plate or lug). When a bracket is installed, it has to have at least the same thickness as the web plate of the frame and the edge has to be appropriately stiffened against buckling.

(b) For ice class **IAS**, for ice class **IA** in the forward and midship regions and for ice classes **IB** and **IC** in the forward region, the following are to apply in the ice-strengthened area:

(i) Frames which are not at a straight angle to the shell are to be supported against tripping by brackets, intercostals, stringers or similar at a distance not exceeding 1,300 mm.

(ii) The frames is to be attached to the shell by double continuous weld. No scalloping is allowed (except when crossing shell plate butts).

(iii) The web thickness of the frames is to be at least one half of the thickness of the shell plating and at least 9 mm. Where there is a deck, tank top or bulkhead in lieu of a frame, the plate thickness of this is to be as above, to a depth corresponding of the height of adjacent frames.

(c) Vertical extension of ice strengthening of side frames

The vertical extension of ice strengthening of side frames is to be at least as shown in Table III 10-12.

Table III 10-12
Vertical Extension of Ice Strengthening of Side Frames

Ice Class	Region	Above LWL (m)	Below BWL (m)
IAS	From stem to 0.3L abaft it	1.2	To double bottom or below top of floors
	Abaft 0.3L from stem	1.2	1.6
	Midship	1.2	1.6
	Aft	1.2	1.2
IA, **IB**, **IC**	From stem to 0.3L abaft it	1.0	1.6
	Abaft 0.3L from stem	1.0	1.3
	Midship	1.0	1.3
	Aft	1.0	1.0

Where an upper forward ice belt is required, see 10.4.2(b)(ii), the ice-strengthened part of the framing is to be extended at least to the top of this ice belt. Where the ice-strengthening would go beyond a deck or a tank top by no more than 250 mm, it can be terminated at that deck or tank top.

(d) Transverse frames

(i) Section modulus

The section modulus of a main or intermediate transverse frame is to be calculated by the formula:

$$Z = \frac{psh\mathit{l}}{m_t \sigma_y} 10^6 \qquad cm^3$$

where :

p = Ice pressure as given in 10.4.3, in MPa.
s = Frame spacing, in m.
h = Height of load area as given in Table III 10-7, in m.
l = Span of the frame, in m.
σ_y = Yield stress of the material, in N/mm^2.
m_t = $\dfrac{7m_o}{7 - \dfrac{5h}{\mathit{l}}}$
m_o = Values are given in Table III 10-13.

The boundary conditions are those for the main and intermediate frames. Load is applied at mid span.

Where less than 15% of the span, l, of the frame is situated with the ice-strengthening zone for frames as defined 10.4.5(c), ordinary frame scantlings may be used.

Table III 10-13
Value of m_o

Boundary condition	m_o	Example
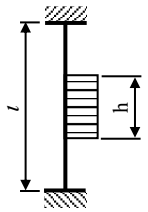	7	Frames in a bulk carrier with top wing tanks
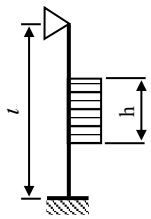	6	Frames extending from the tank top to a single deck
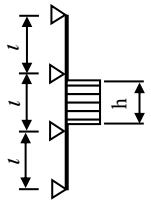	5.7	Continuous frames between several decks or stringers
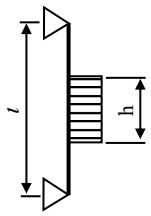	5	Frames extending between two decks only

(ii) Upper end of transverse framing

(1) The upper end of the strengthened part of a main frame and of an intermediate ice frame is to be attached to a deck of an ice stringer as defined in 10.4.6.

(2) Where a frame terminates above a deck or a stringer which is situated at or above the upper limit of the ice belt (section 10.4.2(b)), the part above the deck or stringer may have the scantlings required for an unstrengthened ship and the upper end of an intermediate frame may be connected to the adjacent frames by a horizontal member having the same scantlings as the main frame. Such an intermediate frame can also be extended to the deck above, and if this is situated more than 1.8 metre above the ice belt, the intermediate frame need not be attached to that deck, except in the Forward region.

(iii) Lower end of transverse framing

(1) The lower end of the strengthened part of a main frame and of an intermediate ice frame is to be attached to a deck, tank top or ice stringer as defined in 10.4.6.

(2) Where an intermediate frame terminates below a deck, tank top or ice stringer which is situated at or below the lower limit of the ice belt (section 10.4.2(b)), the lower end may be connected to the adjacent main frames by a horizontal member of the same scantlings as the frames.

(e) Longitudinal frames

The section modulus of a longitudinal frame is to be calculated by the formula:

$$Z = \frac{f_3 \cdot f_4 \cdot p \cdot h \cdot l^2}{m\sigma_y} 10^6 \qquad cm^3$$

The shear area of a longitudinal frame is to be:

$$A = \frac{\sqrt{3} \cdot f_3 \cdot p \cdot h \cdot l}{2\sigma_y} 10^4 \qquad cm^2$$

where :

f_3	=	Factor which takes account of the load distribution to adjacent frames,
	=	(1- 0.2h/s)
f_4	=	Factor which takes account of the concentration of load to the point of support,
	=	0.6.
p	=	Ice pressure as given in 10.4.3, in MPa.
h	=	Height of load area as given in Table III 10-7.
s	=	Frame spacing, in m. The frame spacing is not to exceed 0.35 metre for ice class **IAS** or **IA** and is in no case to exceed 0.45 meter.
l	=	Span of frame, in m.
m	=	Boundary condition factor;
	=	13.3 for a continuous beam; where the boundary conditions deviate significantly from those of a continuous beam, e.g. in an end field, a smaller boundary factor may be required.
σ_y	=	Yield stress of the material, in N/mm^2.

10.4.6 Ice stringers

(a) Stringers within the ice belt

The section modulus of a stringer situated within the ice belt is to be calculated by the formula:

$$Z = \frac{f_5 \cdot p \cdot h \cdot l^2}{m\sigma_y} 10^6 \qquad cm^3$$

The shear area is to be:

$$A = \frac{\sqrt{3} \cdot f_5 \cdot p \cdot h \cdot l}{2\sigma_y} 10^4 \qquad cm^2$$

where :

p	=	Ice pressure as given in 10.4.3, MPa.
h	=	Height of load area as given in Table III 10-7, in m.

The product p·h is not to be taken as less than 0.30.

l	=	Span of stringer, in m.
m	=	Boundary condition factor as defined in 10.4.5(e).
f_5	=	Factor which takes account of the distribution of load to the transverse frames; to be taken as 0.9.
λ	=	Yield stress of the material, in N/mm^2.

(b) Stringers outside the ice belt

The section modulus of a stringer situated outside the ice belt but supporting ice-strengthened frames is to be calculated by the formula:

$$Z = \frac{f_6 \cdot p \cdot h \cdot l^2}{m\sigma_y} \left(1 - \frac{h_s}{l_s}\right) 10^6 \qquad cm^3$$

The shear area is to be:

$$A = \frac{\sqrt{3} \cdot f_6 \cdot p \cdot h \cdot l}{2\sigma_y}\left(1 - \frac{h_s}{l_s}\right)10^4 \qquad cm^2$$

where :

p = Ice pressure as given in 10.4.3, MPa.
h = Height of load area as given in Table III 10-7, in m.
The product of p·h is not to be taken as less than 0.30.
l = Span of stringer, in m.
m = Boundary condition factor as defined in 10.4.5(e).
l_s = The distance to the adjacent ice stringer, in m.
h_s = The distance to the ice belt, in m.
f_6 = Factor which takes account of load to the transverse frames; to be taken as 0.95.
σ_y = Yield stress of the material, in N/mm^2.

(c) Deck stringers

Narrow deck strips abreast of hatches and serving as ice stringers are to comply with the section modulus and shear area requirements in 10.4.6(a) and (b) respectively. In the case of very long hatches, the product of p·h may be taken as less than 0.30 but in no case as less than 0.20. Regard is to be paid to the deflection of the ship's sides due to ice pressure in way of very long hatch openings when designing weather deck hatch covers and their fittings.

10.4.7 Web frames

(a) Load

The load transferred to a web frame from an ice stringer or from longitudinal framing is to be calculated by the formula:

$$F = p \cdot h \cdot S \qquad MN$$

where :

p = Ice pressure as given in 10.4.3, in MPa, in calculating c_a however, l_a is to be taken as 2S.
h = Height of load area as given in Table III 10-7, in m.
The product of p·h is not to be taken as less than 0.30.
S = Distance between web frames, in m.

In case the supported stringer is outside the ice belt, the force F is to be multiplied by $(1 - h_s/l_s)$, where h_s and l_s is to be taken as defined in 10.4.6(b).

(b) Section modulus and shear area

If a web frame is represented by the structure model shown in Fig. III 10-3, the section modulus and shear area is to be calculated by the formulae:

(i) Shear area

$$A = \frac{\sqrt{3} \cdot \alpha \cdot Q \cdot 10^4}{\sigma_y} \qquad cm^2$$

where :

p = Maximum calculated shear force under the load F, as given in 10.4.7(a), or $k_1 \cdot F$.
k_1 = $1 + 1/2\,(l_F/l)^3 - 3/2\,(l_F/l)^2$ or

= $3/2\ (l_F/l)^2 - 1/2\ (l_F/l)^3$ whichever is greater.

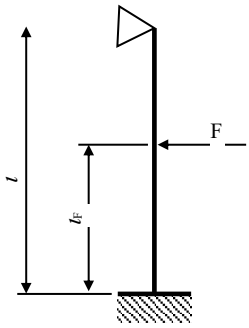

Fig. III 10-3
Loading Model

For the lower part of the web frame the smallest l_F within the ice belt is to be used. For the upper part the biggest l_F within the ice belt is to be taken.

α	=	As given in the Table III 10-14.
σ_y	=	Yield stress of the material, in N/mm^2.
F	=	As in 10.4.7(a).

(ii) Section modulus

$$Z = \frac{M}{\sigma_y}\sqrt{\frac{1}{1-\left(\frac{\gamma A}{A_a}\right)^2}}\,10^6 \qquad \text{cm}^3$$

where :

M	=	Maximum calculated bending moment under the load F, as given in 10.4.7(a), or $k_2 \cdot F \cdot l$.
k_2	=	$1/2\ (l_F/l)^3 - 3/2\ (l_F/l)^2 + (l_F/l)$
γ	=	As given in Table III 10-14.
A	=	Required shear area obtained by using k_1.
k_1	=	$1 + 1/2\ (l_F/l)^3 - 3/2\ (l_F/l)^2$
A_a	=	Actual cross sectional area of the web frame.

Table III 10-14
Factors α and γ

$\frac{A_f}{A_w}$	α	γ
0	1.5	0
0.2	1.23	0.44
0.4	1.16	0.62
0.6	1.11	0.71
0.8	1.09	0.76
1.0	1.07	0.80
1.2	1.06	0.83
1.4	1.05	0.85
1.6	1.05	0.87
1.8	1.04	0.88
2.0	1.04	0.89

where :

A_f = Cross section area of free flange.
A_w = Cross section area of web plate.

(c) Direct calculations

For other web frame configurations and boundary conditions than those given in 10.4.7(b), a direct stress calculation is to be performed.

The concentrated load on the web frame is given in 10.4.7(a). The point of application is in each case to be chosen in relation to the arrangement of stringers and longitudinal frames so as to obtain the maximum shear and bending moments. Allowable stresses are as follows:

(i) Shear stress

$$\tau = \frac{\sigma_y}{\sqrt{3}}$$

(ii) Bending stress

$$\sigma_b = \sigma_y$$

(iii) Equivalent stress

$$\sigma_c = \sqrt{\sigma_b^2 + 3\tau^2} = \sigma_y$$

10.4.8 Bow

(a) Stem

The stem is to be made of rolled, cast or forged steel or of shaped steel plates. A sharp edged stem (see Fig. III 10-4) improves the manoeuvrability of the ship in ice and is recommended particularly for smaller ships with a length under 150 m.

The plate thickness of a shaped plate stem and in the case of a blunt bow, any part of the shell which forms an angle of 30° or more to the centerline in a horizontal plane, is to be calculated according to the formula in 10.4.4 assuming that:

S = Spacing of elements supporting the plate, in m.
P_{PL} = Pressure, as given in 10.4.4, in MPa.
l_a = Spacing of vertical supporting elements, in m.

The stem and the part of a blunt bow defined above are to be supported by floors or brackets spaced not more than 0.6 m apart and having a thickness of at least half the plate thickness. The reinforcement of the stem is to extend from the keel to a point 0.75 m above LWL or, in case an upper forward ice belt is required (section 10.4.2(b)), to the upper limit of this.

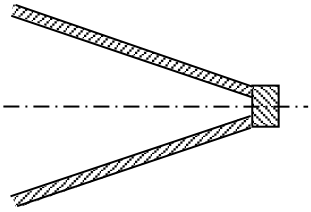

Fig. III 10-4A
Sharp Edge Stem

(b) Arrangements for towing

(i) A mooring pipe with an opening not less than 250 by 300 mm, a length of at least 150 mm and an inner surface radius of at least 100 mm is to be fitted in the bow bulwark at the centerline.

(ii) A bitt or other means for securing a towline, dimensioned to stand the breaking force of the towline of the ship, is to be fitted.

(iii) On ships with a displacement not exceeding 30,000 t, the part of the bow which extends to a height of at least 5 m above the LWL and at least 3 m back from the stem is to be strengthened to take the stresses caused by fork towing. For this purpose intermediate frames are to be fitted and the framing is to be supported by stringers or decks.

(iv) It is to be noted that fork towing is often the most efficient way of assisting ships of moderate size (displacement not exceeding 30,000t) in ice. Ships with a bulb protruding more than 2.5 m forward of the forward perpendicular are, however, often difficult to tow in this way.

10.4.9 Stern

The introduction of new propulsion arrangements with azimuthing thrusters or "podded" propellers, which provide an improved manoeuvrability, will result in increased ice loading of the aft region and the stern area. This fact is to be considered in the design of the aft/stern structure.

(a) An extremely narrow clearance between the propeller blade tip and the stern frame is to be avoided as a small clearance would cause very high loads on the blade tip.

(b) On twin and triple screw ships the ice strengthening of the shell and framing is to be extended to the double bottom for 1.5 m forward and aft of the side propellers.

(c) Shafting and stern tubes of side propellers is to normally be enclosed within plated bossings. If detached struts are used, their design, strength and attachments to the hull are to be duly considered.

(d) A wide transom stern extending below the LWL will seriously impede the capability of the ship to back in ice, which is most essential. Therefore a transom stern is not to be extended below the LWL, if this can be avoided. If unavoidable, the part of the transom below the LWL is to be kept as narrow as possible. The part of a transom stern situated within the ice belt is to be strengthened as for the midship region.

10.4.10 Bilge keels

Bilge keels are often damaged or ripped off in ice. The connection of bilge keels to the hull is to be so designed that the risk of damage to the hull, in case a bilge keel is ripped off, is minimized. To limit damage when a bilge keel is partly ripped off, it is recommended that bilge keels are cut up into several shorter independent lengths.

10.5 Rudders and Steering Arrangements

10.5.1 Scantlings

The scantlings of rudder post, rudder stock, pintles, steering engine etc. as well as the capability of the steering engine are to be determined according to Chapter 24 of Part II. The maximum service speed of the ship to be used in these calculations is to, however, not be taken as less than stated below:

IAS	20 knots
IA	18 knots
IB	16 knots
IC	14 knots

If the actual maximum service speed of the ship is higher, that speed is to be used.

10.5.2 Protection of rudder

For the ice classes **IAS** and **IA** the rudder stock and the upper edge of the rudder are to be protected against ice pressure by an ice knife or equivalent means.

10.5.3 Excessive load

For the ice classes **IAS** and **IA** due regard is to be paid to the excessive load caused by the rudder being forced out of the midship position when backing into an ice ridge.

10.5.4 Special devices

Relief valves for hydraulic pressure are to be effective. The components of the steering gear are to be dimensioned to stand the yield torque of the rudder stock. Where possible, rudder stoppers working on the blade or rudder head are to be fitted.

10.6 Propellers, Shafts and Gears

10.6.1 Dimensions of propellers, shafting and gearing are determined by formulae taking into account the impact when a propeller blade hits ice. The ensuing load is hereinafter called the ice torque M.

$$M = m \cdot D_P^2 \qquad kN - m$$

where :

D_P = Diameter of propeller, in m.
m = 21.09 for ice class **IAS**,
= 15.70 for ice class **IA**,
= 13.05 for ice class **IB**,
= 11.97 for ice class **IC**.

If the propeller is not fully submerged when the ship is in ballast condition, the ice torque for ice class **IA** is to be used for ice classes **IB** and **IC**.

10.6.2 Propellers

(a) The elongation of the material used is not to be less than 19%, preferably less than 22% for a test piece length = 5 d and the value for the Charpy V-notch test is not to be less than 21 J at –10°C.

(b) Width c and thickness t of propeller blade sections are to be determined so that:

(i) at the radius 0.25 D_P /2, for solid propellers

$$ct^2 = \frac{26490}{\sigma_b \cdot \left(0.65 + \frac{0.7H}{D}\right)} \left(27.2 \frac{P_s}{Z \cdot n} + 2.24M\right)$$

(ii) at the radius 0.35 $D_P/2$ for cp-propellers

$$ct^2 = \frac{21090}{\sigma_b \cdot \left(0.65 + \frac{0.7H}{D}\right)} \left(27.2 \frac{P_s}{Z \cdot n} + 2.34M\right)$$

(iii) at the radius 0.6 $D_P/2$

$$ct^2 = \frac{9320}{\sigma_b \cdot \left(0.65 + \frac{0.7H}{D}\right)} \left(27.2 \frac{P_s}{Z \cdot n} + 2.85M\right)$$

where :

c	=	Length, in cm, of the expanded cylindrical section of the blade, at the radius in question.
t	=	The corresponding maximum blade thickness, in cm.
H	=	Propeller pitch in m at the radius in question. (For controllable pitch propellers 0.7 $H_{nominal}$ is to be used.)
P_s	=	Shaft engine output according to 10.3.1, in kW.
n	=	Propeller revolutions, in rpm.
M	=	Ice torque according to 10.3.1.
Z	=	Number of blades.
σ_b	=	Tensile strength, in N/mm^2, of the material.

(c) The blade tip thickness t at the radius 1.0 $D_p/2$ is to be determined by the following formulae:

(i) Ice Class **IAS**

$$t = (20 + 2D_P)\sqrt{\frac{490}{\sigma_b}} \qquad \text{mm}$$

(ii) Ice Classes **IA**, **IB** and **IC**

$$t = (15 + 2D_P)\sqrt{\frac{490}{\sigma_b}} \qquad \text{mm, where } D_P \text{ and } \sigma_b \text{ are as defined in (b).}$$

(d) The thickness of other sections is governed by a smooth curve connecting the above section thicknesses.

(e) Where the blade thickness derived is less than the thickness as specified in 7.2 of Part IV, the latter is to be used.

(f) The thickness of blade edges is not to be less than 50% of the derived tip thickness t, measured at 1.25 t from the edge. For controllable pitch propellers this applies only to the leading edge.

(g) The strength of mechanisms in the boss of a controllable pitch propeller is to be 1.5 times that of the blade when a load is applied at the radius 0.9 D_p / 2 in the weakest direction of the blade.

10.6.3 Propeller shaft

The diameter of the propeller shaft at the aft bearing is not to be less than:

$$d_s = 10.8 \cdot \sqrt[3]{\frac{\sigma_b \cdot ct^2}{\sigma_y}} \qquad \text{mm}$$

where:

σ_b = Tensile strength of the blade in N/mm^2.
ct^2 = Value derived by the formulae in 10.6.2.
σ_y = Yield stress of the shaft, in N/mm^2.

If the diameter of the propeller boss is greater than 0.25 D_p, the following formula is to be used:

$$d_s = 11.5 \cdot \sqrt[3]{\frac{\sigma_b \cdot ct^2}{\sigma_y}} \qquad \text{mm}$$

where :

ct^2 = Value derived by the formulae in 10.6.2.
σ_b and σ_y are as defined previously.

If the shaft diameter derived is less than the diameter as specified in 6.4 of Part IV, the latter is to be used. The shaft may be tapered in accordance with the rules.

10.6.4 Intermediate shafts

The diameter of intermediate shafts and thrust shafts in external bearings are not to be less than:

d_i =1.1 d_{rule}, for ice class **IAS**.

No strengthening is required for ice classes **IA**, **IB** and **IC**, i.e. the diameters as specified in 6.2 of Part IV, are to be used.

10.6.5 Reduction gears

For calculation of the maximum permissible gear tooth load for maximum P_S according to 10.3.1, the following loading factor K_i is to be used:

$$K_i = K \frac{N}{N + \frac{\frac{M I_h R^2}{9.81}}{I_1 + I_h R^2}}$$

where :

K = The rule loading factor as specified in 5.3.1 of Part IV.
M = Ice torque according to 10.6.1.
N = 0.534 P_S/n where,
  P_S = Shaft engine output according to 10.3.1, in kW.
  n = Corresponding engine, in rpm.
R = Gear ratio, pinion rpm/gear wheel rpm.
I_h = Mass moment of inertia of machinery components rotating at higher rpm.
I_l = Mass moment of inertia of machinery components rotating at lower rpm including propeller with an addition of 30% for water. (I_h and I_l are to be expressed in the same dimension)

10.7 Starting Arrangements

10.7.1 Capacity of starting air receivers

The capacity of the air receivers is to be sufficient to provide without reloading not less than 12 consecutive starts of the propulsion engine, if this has to be reversed for going astern, or 6 consecutive starts if the propulsion engine does not have to be reversed for going astern. If the air receivers serve any other purposes than starting the propulsion engine, they are to have additional capacity sufficient for these purposes.

10.7.2 Capacity of starting air compressors

The capacity of the air compressors is to be sufficient for charging the air receivers from atmospheric to full pressure in one (1) hour, except for a ship with the ice class **IAS**, if its propulsion engine has to be reversed for going astern, in which case the compressor is to be able to charge the receivers in half an hour.

10.8 Sea Inlets and Cooling Water Systems

The cooling water system is to be designed to ensure supply of cooling water when navigating in ice.

10.8.1 Sea chest

For this purpose at least one cooling water inlet chest is to be arranged as follows:

(a) The sea inlet is to be situated near the center line of the ship and well aft if possible.

(b) As guidance for design the volume of the chest is to be about one cubic metre for every 750 kW engine output of the ship including the output of auxiliary engines necessary for the ship's service.

(c) The chest is to be sufficiently high to allow ice to accumulate above the inlet pipe.

(d) A pipe for discharge cooling water, allowing full capacity discharge, is to be connected to the chest.

(e) The open area of the strainer plates is to not be less than four (4) times the inlet pipe sectional area. If there are difficulties to meet the requirements of paragraphs (b) and (c) above, two smaller chests may be arranged for alternating intake and discharge of cooling water. Otherwise the arrangement and situation is to be as above.

10.8.2 Heating coils

Heating coils may be installed in the upper part of the sea chest.

10.8.3 Using ballast water for cooling

Arrangements for using ballast water for cooling purposes may be useful as a reserve in ballast condition but cannot be accepted as a substitute for sea inlet chest as described above.

Chapter 10A

Polar Class

10A.1 Polar Class Descriptions and Application

10A.1.1 Application

(a) The classification and surveying symbols are followed by the notation **Ice Class** if ships are in compliance with the requirements of this chapter.

(b) The requirements for Polar Class ships apply to ships constructed of steel and intended for independent navigation in ice-infested polar waters, except ice breakers.

(c) Ships that comply with the 10A.2 and 10A.3 can be considered for a Polar Class notation as listed in Table III 10A-1. The requirements of 10A.2 and 10A.3 are in addition to the open water requirements of the Rules. If the hull and machinery are constructed such as to comply with the requirements of different Polar Classes, then both the hull and machinery are to be assigned the lower of these classes in the classification certificate. Compliance of the hull or machinery with the requirements of a higher Polar Class is also to be indicated in the classification certificate or equivalent.

(d) For ships which are assigned a Polar Class notation, the hull form and propulsion power are to be such that the ship can operate independently and at continuous speed in a representative ice condition, as defined in Table III 10A-1 for the corresponding Polar Class. For ships and ship-shaped units which are intentionally not designed to operate independently in ice, such operational intent or limitations are to be explicitly stated in the classification certificate or equivalent.

(e) For ships which are assigned a Polar Class notation **PC1** through **PC5**, bows with vertical sides, and bulbous bows are generally to be avoided. Bow angles should in general be within the range specified in 10A.2.3(a)(v).

(f) For ships which are assigned a Polar Class notation **PC6** and **PC7**, and are designed with a bow with vertical sides or bulbous bows, operational limitations (restricted from intentional ramming) in design conditions are to be stated in the classification certificate or equivalent.

10A.1.2 Polar Classes

(a) The Polar Class (**PC**) notations and descriptions are given in Table III 10A-1. For ships complying with the requirements specified in this chapter, ice class notation will be affixed to the notation, **Ice Class**, e.g., **Ice Class PC1**.

(b) It is the responsibility of the Owner to select an appropriate Polar Class. The descriptions in Table III 10A-1 are intended to guide owners, designers and administrations in selecting an appropriate Polar Class to match the requirements for the ship with its intended voyage or service.

(c) The Polar Class notation is used throughout this chapter to convey the differences between classes with respect to operational capability and strength.

Table III 10A-1
Polar Class Descriptions

Polar Class	Ice description(based on WMO Sea Ice Nomenclature)
PC1	Year round operation in all polar waters
PC2	Year-round operation in moderate multi-year ice conditions
PC3	Year-round operation in second-year ice which may include multi- year ice inclusions.
PC4	Year-round operation in thick first-year ice which may include old ice inclusions
PC5	Year-round operation in medium first-year ice which may include old ice inclusions
PC6	Summer/autumn operation in medium first-year ice which may include old ice inclusions
PC7	Summer/autumn operation in thin first-year ice which may include old ice inclusions

10A.1.3 Upper and lower ice waterlines

(a) The upper and lower ice waterlines upon which the design of the ship has been based is to be indicated in the classification certificate. The upper ice waterline (UIWL) is to be defined by the maximum draughts fore, amidships and aft. The lower ice waterline (LIWL) is to be defined by the minimum draughts fore, amidships and aft.

(b) The lower ice waterline is to be determined with due regard to the ship's ice-going capability in the ballast loading conditions. The propeller is to be fully submerged at the lower ice waterline.

10A.2 Structural Requirements for Polar Class Ships

10A.2.1 Application

These requirements are to be applied to Polar Class ships according to 10A.1.

10A.2.2 Hull areas

(a) The hull of Polar Class ships is divided into areas reflecting the magnitude of the loads that are expected to act upon them. In the longitudinal direction, there are four regions: Bow, Bow Intermediate, Midbody and Stern. The Bow Intermediate, Midbody and Stern regions are further divided in the vertical direction into the Bottom, Lower and Icebelt regions. The extent of each hull area is illustrated in Fig. III 10A-1.

(b) The upper ice waterline (UIWL) and lower ice waterline (LIWL) are as defined in 10A.1.3.

(c) Fig. III 10A-1 notwithstanding, at no time is the boundary between the Bow and Bow Intermediate regions to be forward of the intersection point of the line of the stem and the ship baseline.

(d) Fig. III 10A-1 notwithstanding, the aft boundary of the Bow region need not be more than 0.45 L aft of the forward perpendicular (FP).

(e) The boundary between the bottom and lower regions is to be taken at the point where the shell is inclined 7 degrees from horizontal.

(f) If a ship is intended to operate astern in ice regions, the aft section of the ship is to be designed using the Bow and Bow Intermediate hull area requirements.

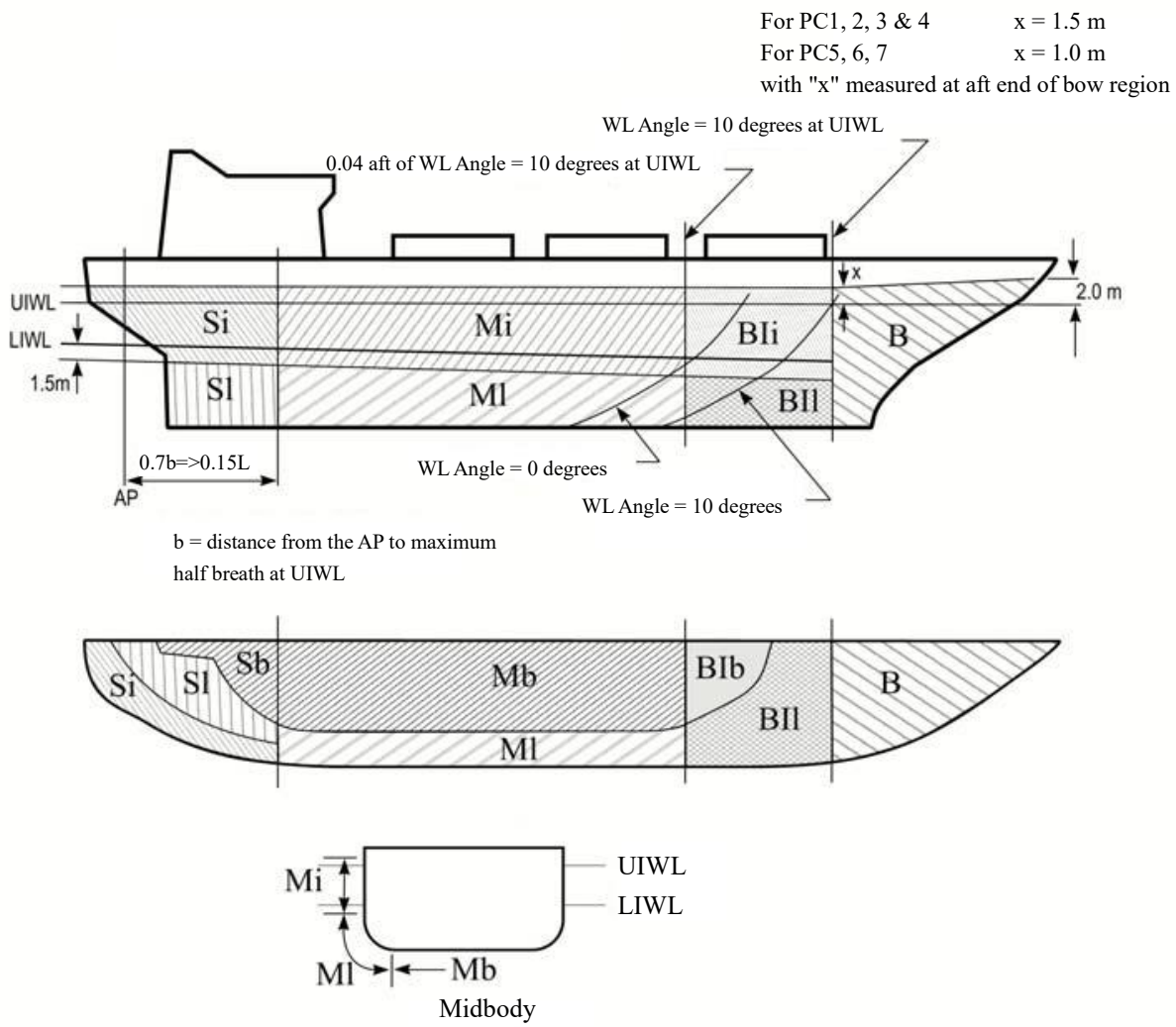

Fig. III 10A-1
Hull Area Extents

10A.2.3 Design ice loads

(a) General

(i) A glancing impact on the bow is the design scenario for determining the scantlings required to resist ice loads.

(ii) The design ice load is characterized by an average pressure (P_{avg}) uniformly distributed over a rectangular load patch of height (b) and width (w).

(iii) Within the Bow area of all Polar Class ships, and within the Bow Intermediate Icebelt area of Polar Classes **PC6** and **PC7**, the ice load parameters are functions of the actual bow shape. To determine the ice load parameters (P_{avg}, b and w), it is required to calculate the following ice load characteristics for sub-regions of the bow area; shape coefficient (fa_i), total glancing impact force (F_i), line load (Q_i) and pressure (P_i).

(iv) In other ice-strengthened areas, the ice load parameters (P_{avg}, b_{NonBow} and w_{NonBow}) are determined independently of the hull shape and based on a fixed load patch aspect ratio, AR= 3.6.

(v) Design ice forces calculated according to 10A.2.3(b) are applicable for bow forms where the buttock angle γ at the stem is positive and less than 80 degrees, and the normal frame angle β' at the center of the foremost sub-region, as defined in 10A.2.3(b)(ii)(1), is greater than 10 degrees.

(vi) Design ice forces calculated according to 10A.2.3(b)(ii)(4) are applicable for ships which are assigned the Polar Class **PC6** or **PC7** and have a bow form with vertical sides. This includes bows where the normal frame anglesβ' at the considered sub-regions, as defined in 10A.2.3(b)(ii)(1), are between 0 and 10 degrees.

(vii) For ships which are assigned the Polar Class **PC6** and **PC7**, and equipped with bulbous bows, the design ice forces on the bow are to be determined according to 10A.2.3(b)(ii)(4). In addition, the design forces are not to be taken led than those given in 10A.2.3(b)(ii)(3), assuming f_a=0.6 and AR=1.3.

(viii) For ships with bow forms other than those defined in (v) to (vii), design forces are to be specially considered by the Society.

(ix) Ship structures that are not directly subjected to ice loads may still experience inertial loads of stowed cargo and equipment resulting from ship/ice interaction. These inertial loads are to be considered in the design of these structures.

(b) Glancing impact load characteristics

(i) The parameters defining the glancing impact load characteristics are reflected in the Class Factors listed in Table III 10A-2 and Table III 10A-3.

Table III 10A-2
Class Factors to be Used in 10A.2.3(b)(ii)(3)

Polar Class	Crushing failure Class Factor (CF_C)	Flexural failure Class Factor (CF_F)	Load Patch Dimensions Class Factor(CF_D)	Displacement Class Factor (CF_{DIS})	Longitudinal Strength Class Factor(CF_L)
PC1	17.69	68.60	2.01	250	7.46
PC2	9.89	46.80	1.75	210	5.46
PC3	6.06	21.17	1.53	180	4.17
PC4	4.50	13.48	1.42	130	3.15
PC5	3.10	9.00	1.31	70	2.50
PC6	2.40	5.49	1.17	40	2.37
PC7	1.80	4.06	1.11	22	1.81

Table III 10A-3
Class Factors to be Used in 10A.2.3(b)(ii)(4)

Polar Class	Crushing failure Class Factor (CF_{CV})	Line load Class Factor (CF_{QV})	Pressure Class Factor(CF_{PV})
PC6	3.43	2.82	0.65
PC7	2.60	2.33	0.65

(ii) Bow area

(1) In the Bow area, the force (F), line load (Q), pressure (P) and load patch aspect ratio (AR) associated with the glancing impact load scenario are functions of the hull angles measured at the upper ice waterline (UIWL). The influence of the hull angles is captured through calculation of a bow shape coefficient (fa). The hull angles are defined in Fig. III 10A-2.

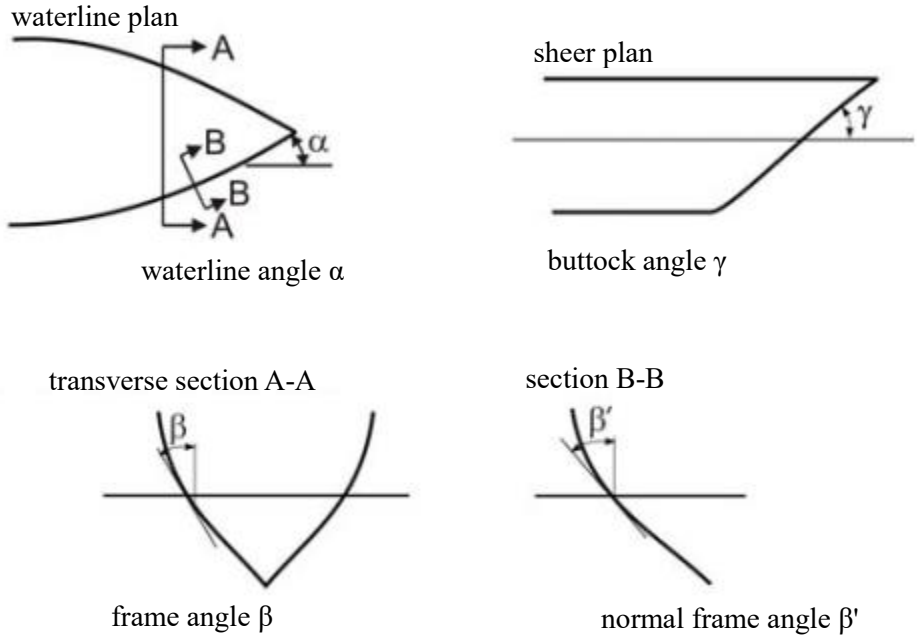

Note: β' = Normal frame angle at upper ice waterline, in degree
α = Upper ice waterline angle, in degree
γ = Buttock angle at upper ice waterline, in degree (angle of buttock line measured from horizontal)
tan(β) = tan(α) / tan(γ)
tan(β') = tan(β) · cos(α)

Fig. III 10A-2
Definition of Hull Angles

(2) The waterline length of the bow region is generally to be divided into 4 sub-regions of equal length. The force (F), line load (Q), pressure (P) and load patch aspect ratio (AR) are to be calculated with respect to the mid-length position of each sub-region (each maximum of F, Q and P is to be used in the calculation of the ice load parameters P_{avg}, b and w).

(3) The Bow area load characteristics for bow forms defined in 10A.2.3(a)(v) are determined as follows:

a) Shape coefficient fa_i is to be taken as:

$$fa_i = \min(fa_{i,1}, fa_{i,2}, fa_{i,3})$$ [Eq. III 10A-1]

where:

$$fa_{i,1} = \left[0.097 - 0.068\left(\frac{x}{L} - 0.15\right)^2\right] \cdot \alpha_i/(\beta_i')^{0.5}$$ [Eq. III 10A-2]

$$fa_{i,2} = 1.2 \cdot CF_F/[\sin(\beta_i') \cdot CF_C \cdot D^{0.64}]$$ [Eq. III 10A-3]

$$fa_{i,3} = 0.60$$ [Eq. III 10A-4]

b) Force, F_i:

$$F_i = fa_i \cdot CF_C \cdot D^{0.64} \quad \text{MN}$$ [Eq. III 10A-5]

c) Load patch aspect ratio, AR:

$$AR_i = 7.46 \cdot \sin(\beta_i') \geq 1.3$$ [Eq. III 10A-6]

d) Line load, Q:

$$Q_i = F_i^{0.61} \cdot CF_D/AR_i^{0.35} \quad \text{MN/m}$$ [Eq. III 10A-7]

e) Pressure, P:

$$P_i = F_i^{0.22} \cdot CF_D^2 \cdot AR_i^{0.3} \quad \text{MPa}$$ [Eq. III 10A-8]

where:

i = Sub-region considered

CF_D = Load patch dimensions class factor from Table III 10A-2

L = Ship length as defined in 10A.2.1,in m, but measured on the upper ice waterline (UIWL)

x = Distance from the forward perpendicular (FP) to station under consideration, in m

α = Waterline angle,in degree, see Fig. III 10A-2

β' = Normal frame angle, in degree, see Fig. III 10A-2

D = Ship displacement, in kt, not to be taken less than 5 kt

CF_C = Crushing failure Class Factor from Table III 10A-2

CF_F = Flexural failure Class Factor from Table III 10A-2

β'_i = Normal frame angle of sub-region i, in degree

(4) The bow area load characteristics for bow forms defined in 10A.2.3(a)(vi) are determined as follows:

a) Shape coefficient, fa_i, is to be taken as

$$fa_i = \alpha_i/30$$

b) Force, F_i:

$$F_i = fa_i \cdot CF_{CV} \cdot D^{0.47} \quad \text{MN}$$

c) Line load, Q_i:

$$Q_i = F_i^{0.22} \cdot CF_{QV} \quad \text{MN/m}$$

d) Pressure, P_i:

$$P_i = F^{0.56} \cdot CF_{PV} \quad \text{MPa}$$

i = Sub-region considered

α = Waterline angle, in degree, see Fig. III 10A-2

D = Ship displacement, in kt, not to be taken less than 5kt

CF_{CV} = Crushing failure Class Factor from Table III 10A-3

CF_{QV} = Line load Class Factor from Table III 10A-3

CF_{PV} = Pressure Class Factor from Table III 10A-3

(iii) Hull areas other than the bow

(1) In the hull areas other than the bow, the force (F_{NonBow}) and line load (Q_{NonBow}) used in the determination of the load patch dimensions (b_{NonBow}, w_{NonBow}) and design pressure (P_{avg}) are determined as follows:

a) Force, F_{NonBow}:

$$F_{NonBow} = 0.36 \cdot CF_C \cdot DF \quad \text{MN} \qquad \text{[Eq. III 10A-9]}$$

b) Line Load, Q_{NonBow}:

$$Q_{NonBow} = 0.639 \cdot F_{NonBow}^{0.61} \cdot CF_D \quad \text{MN/m} \qquad \text{[Eq. III 10A-10]}$$

where:

CF_C = Crushing failure Class Factor from Table III 10A-2

DF = Ship displacement factor

= $D^{0.64}$ if $D \le CF_{DIS}$

= $CF_{DIS}^{0.64} + 0.10 \cdot (D - CF_{DIS})$ if $D > CF_{DIS}$

D = Ship displacement, in kt, not to be taken less than 10 kt

CF_{DIS} = Displacement Class Factor from Table III 10A-2

CF_D = Load patch dimensions Class Factor from Table III 10A-2

(c) Design load patch

(i) In the Bow area, and the Bow Intermediate Icebelt area for ships with class notation **PC6** and **PC7**, the design load patch has dimensions of width, w_{Bow}, and height, b_{Bow}, defined as follows:

$$w_{Bow} = F_{Bow}/Q_{Bow} \quad \text{m} \qquad \text{[Eq. III 10A-11]}$$
$$b_{Bow} = Q_{Bow}/P_{Bow} \quad \text{m} \qquad \text{[Eq. III 10A-12]}$$

where:

F_{Bow} = Maximum force F_i in the Bow area from Eq. III 10A-5, in MN

Q_{Bow} = Maximum line load Q_i in the Bow area from Eq. III 10A-7, in MN/m

P_{Bow} = Maximum pressure P_i in the Bow area from Eq. III 10A-8, in MPa

(ii) In hull areas other than those covered by 10A.2.3(c)(i), the design load patch has dimensions of width, w_{NonBow}, and height, b_{NonBow}, defined as follows:

$$w_{NonBow} = F_{NonBow}/Q_{NonBow} \quad \text{m} \qquad \text{[Eq. III 10A-13]}$$
$$b_{Nonbow} = w_{NonBow}/3.6 \quad \text{m} \qquad \text{[Eq. III 10A-14]}$$

where:

F_{NonBow} = Force determined using Eq.III 10A-9, in MN

Q_{NonBow} = Line load determined using Eq.III 10A-10, in MN/m

(d) Pressure within the design load patch

(i) The average pressure, P_{avg}, within a design load patch is determined as follows:

$$P_{avg} = F/(b \cdot w) \quad \text{MPa} \qquad \text{[Eq. III 10A-15]}$$

where:

F = F_{Bow} or F_{NonBow} as appropriate for the hull area under consideration, in MN

b = b_{Bow} or b_{NonBow} as appropriate for the hull area under consideration, in m

w = w_{Bow} or w_{NonBow} as appropriate for the hull area under consideration, in m

(ii) Areas of higher, concentrated pressure exist within the load patch. In general, smaller areas have higher local pressures. Accordingly, the peak pressure factors listed in Table III 10A-4 are used to account for the pressure concentration on localized structural members.

Table III 10A-4
Peak Pressure Factors

Structural member		Peak Pressure Factor(PPF_i)
Plating	Transversely-framed	$PPF_p = (1.8 - s) \geq 1.2$
	Longitudinally-framed	$PPF_p = (2.2 - 1.2s) \geq 1.5$
Frames in transverse framing systems	With load distributing stringers	$PPF_t = (1.6 - s) \geq 1.0$
	With no load distributing stringers	$PPF_t = (1.8 - s) \geq 1.2$
Load carrying stringers Side and bottom longitudinals Web frames		$PPF_s = 1$, if $S_w \geq 0.5w$, $PPF_s = 2.0 - 2.0S_w / w$, if $S_w < (0.5w)$
Where: s = Frame or longitudinal spacing, in m S_w = Web frame spacing, in m w = Ice load patch width, in m		

(e) Hull area factors

(i) Associated with each hull area is an Area Factor that reflects the relative magnitude of the load expected in that area. The Area Factor (AF) for each hull area is listed in Table III 10A-5.

(ii) In the event that a structural member spans across the boundary of a hull area, the largest hull area factor is to be used in the scantling determination of the member.

(iii) Due to their increased manoeuvrability, ships having propulsion arrangements with azimuthing thruster(s) or "podded" propellers are to have specially considered Stern Icebelt (S_i) and Stern Lower (S_l) hull area factors.

Table III 10A-5
Hull Area Factors (AF)

Hull Area		Area	Polar Class						
			PC1	**PC2**	**PC3**	**PC4**	**PC5**	**PC6**	**PC7**
Bow (B)	All	B	1.00	1.00	1.00	1.00	1.00	1.00	1.00
Bow Intermediate (BI)	Icebelt	BI_i	0.90	0.85	0.85	0.80	0.80	1.00(1)	1.00(1)
	Lower	BI_l	0.70	0.65	0.65	0.60	0.55	0.55	0.50
	Bottom	BI_b	0.55	0.50	0.45	0.40	0.35	0.30	0.25
Midbody (M)	Icebelt	M_i	0.70	0.65	0.55	0.55	0.50	0.45	0.45
	Lower	M_l	0.50	0.45	0.40	0.35	0.30	0.25	0.25
	Bottom	M_b	0.30	0.30	0.25	(2)	(2)	(2)	(2)
Stern (S)	Icebelt	S_i	0.75	0.70	0.65	0.60	0.50	0.40	0.35
	Lower	S_l	0.45	0.40	0.35	0.30	0.25	0.25	0.25
	Bottom	S_b	0.35	0.30	0.30	0.25	0.15	(2)	(2)

Notes:
(1) See 10A.2.3(a)(iii)
(2) Indicates that strengthening for ice loads is not necessary

10A.2.4 Shell plate requirements

(a) The required minimum shell plate thickness, t, is given by:

$t = t_{net} + t_s$ mm [Eq. III 10A-16]

where:

t_{net} = Plate thickness required to resist ice loads according to 10A.2.4(b), in mm

t_s = Corrosion and abrasion allowance according to 10A.2.11, in mm

(b) The thickness of shell plating required to resist the design ice load, t_{net}, depends on the orientation of the framing.

In the case of transversely-framed plating ($\Omega \geq 70$ degrees), including all bottom plating, i.e. plating in hull areas BI_b, M_b and S_b, the net thickness is given by:

$$t_{net} = 500s \cdot \left[(AF \cdot PPF_P \cdot P_{avg})/\sigma_y\right]^{0.5} / [1 + s/(2 \cdot b)] \text{ mm} \quad \text{[Eq. III 10A-17a]}$$

In the case of longitudinally-framed plating ($\Omega \leq 20$ degrees), when $b \geq s$, the net thickness is given by:

$$t_{net} = 500s \cdot \left[(AF \cdot PPF_P \cdot P_{avg})/\sigma_y\right]^{0.5} / [1 + s/(2 \cdot l)] \text{ mm} \quad \text{[Eq. III 10A-17b]}$$

In the case of longitudinally-framed plating ($\Omega \leq 20$ degrees), when $b < s$, the net thickness is given by:

$$t_{net} = 500s \cdot \left[(AF \cdot PPF_P \cdot P_{avg})/\sigma_y\right]^{0.5} \cdot [2 \cdot b/s - (b/s)^2]^{0.5} / [1 + s/(2 \cdot l)] \text{ mm} \quad \text{[Eq. III 10A-17c]}$$

In the case of obliquely-framed plating(70 degrees $> \Omega >$ 20 degrees), linear interpolation is to be used.

where:

Ω = Smallest angle between the chord of the waterline and the line of the first level framing as illustrated in Fig. III 10A-3, in degree

s = Transverse frame spacing in transversely-framed ships or longitudinal frame spacing in longitudinally-framed ships, in m

AF = Hull Area Factor from Table III 10A-5

PPF_P = Peak Pressure Factor from Table III 10A-4

P_{avg} = Average patch pressure according to Eq.III 10A-15, in MPa

σ_y = Minimum upper yield stress of the material, in N/mm^2

b = Height of design load patch, where $b \leq (l\text{-}s/4)$ in the case of Eq.III 10A-17a, in m

l = Distance between frame supports, i.e. equal to the frame span as given in 10A.2.5(e), but not reduced for any fitted end brackets, in m. When a load-distributing stringer is fitted, the length *l* need not be taken larger than the distance from the stringer to the most distant frame support.

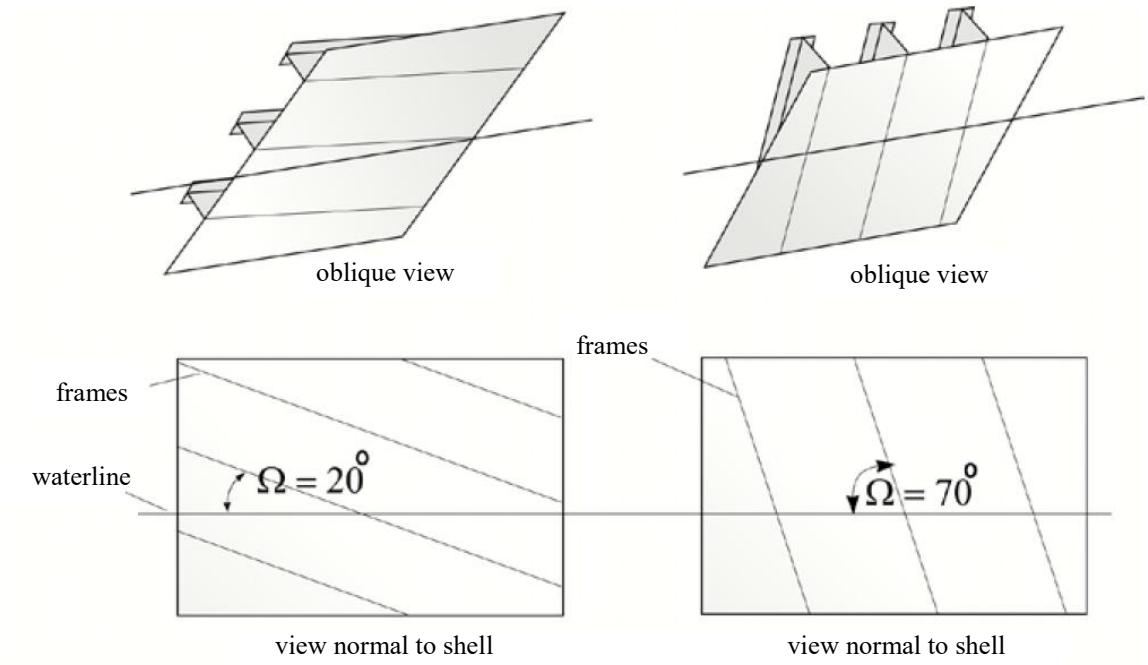

Fig. III 10A-3
Shell Framing Angle Ω

10A.2.5 Framing - General

(a) Framing members of Polar Class ships are to be designed to withstand the ice loads defined in 10A.2.3.

(b) The term "framing member" refers to transverse and longitudinal local frames, load-carrying stringers and web frames in the areas of the hull exposed to ice pressure, see Fig. III 10A-1. Where load-distributing stringers have been fitted, the arrangement and scantlings of these are to be in accordance with the requirements of the Society.

(c) The strength of a framing member is dependent upon the fixity that is provided at its supports. Fixity can be assumed where framing members are either continuous through the support or attached to a supporting section with a connection bracket. In other cases, simple support is to be assumed unless the connection can be demonstrated to provide significant rotational restraint. Fixity is to be ensured at the support of any framing which terminates within an ice-strengthened area.

(d) The details of framing member intersection with other framing members, including plated structures, as well as the details for securing the ends of framing members at supporting sections, are to be in accordance with the requirements of the Society.

(e) The effective span of a framing member is to be determined on the basis of its moulded length. If brackets are fitted, the effective span may be reduced in accordance with the usual practice of the Society. Brackets are to be configured to ensure stability in the elastic and post-yield response regions.

(f) When calculating the section modulus and shear area of a framing member, net thicknesses of the web, flange (if fitted) and attached shell plating are to be used. The shear area of a framing member may include that material contained over the full depth of the member, i.e. web area including portion of flange, if fitted, but excluding attached shell plating.

(g) The actual net effective shear area, A_w, of a transverse or longitudinal local frame is given by:

$$A_w = h \cdot t_{wn} \cdot \sin\varphi_w / 100 \quad cm^2$$ [Eq. III 10A-18]

where:

h = Height of stiffener,in mm, see Fig. III 10A-4

t_{wn} = Net web thickness, in mm

= $t_w - t_c$

t_w = As built web thickness, in mm, see Fig. III 10A-4

t_c = Corrosion deduction to be subtracted from the web and flange thickness (as specified by the Society, but not less than t_s as required by 10A.2.11(c)), in mm

φ_w = Smallest angle between shell plate and stiffener web, measured at the midspan of the stiffener, in degree, see Fig. III 10A-4. The angle φ_w may be taken as 90 degrees provided the smallest angle is not less than 75 degrees.

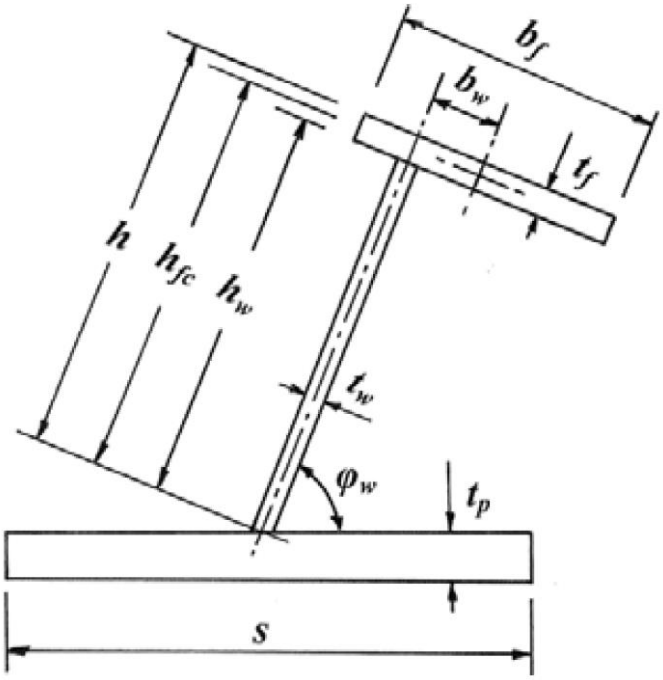

Fig. III 10A-4
Stiffener Geometry

(h) When the cross-sectional area of the attached plate flange exceeds the cross-sectional area of the local frame, the actual net effective plastic section modulus, Z_p, of a transverse or longitudinal frame is given by:

$$Z_p = A_{pn} \cdot \frac{t_{pn}}{20} + (h_w^2 \cdot t_{wn} \cdot \sin\varphi_w)/2000 + A_{fn} \cdot (h_{fc} \cdot \sin\varphi_w - b_w \cdot \cos\varphi_w)/10 \quad cm^3$$ [Eq. III 10A-19]

where:

h, t_{wn}, t_c and φ_w are as given in 10A.2.5(g) and s as given in 10A.2.4(b).

A_{pn} = Net cross-sectional area of the local frame, in cm^2

t_{pn} = Fitted net shell plate thickness, in mm (shall comply with t_{net} as required by 10A.2.4(b))

h_w = Height of local frame web, in mm, see Fig. III 10A-4

A_{fn} = Net cross-sectional area of local frame flange, in cm^2

h_{fc} = Height of local frame measured to center of the flange area, in mm, see Fig. III 10A-4

b_w = Distance from mid thickness plane of local frame web to the center of the flange area, in mm, see Fig. III 10A-4

When the cross-sectional area of the local frame exceeds the cross-sectional area of the attached plate flange, the plastic neutral axis is located a distance z_{na} above the attached shell plate, given by:

$$z_{na} = (100 \cdot A_{fn} + h_w \cdot t_{wn} - 1000 \cdot t_{pn} \cdot s)/(2 \cdot t_{wn}) \text{ mm}$$ [Eq. III 10A-20]

and the net effective plastic section modulus, Z_p, of a transverse or longitudinal frame is given by:

$$Z_P = t_{pn} \cdot s \cdot \left(z_{na} + \frac{t_{pn}}{2}\right) \cdot \sin\varphi_w + \left\{\frac{[(h_w - z_{na})^2 + z_{na}^2] \cdot t_{wn} \cdot \sin\varphi_w}{2000} + \frac{A_{fn} \cdot [(h_{fc} - z_{na}) \cdot \sin\varphi_w - b_w \cdot \cos\varphi_w]}{10}\right\} \text{ cm}^3$$ [Eq. III 10A-21]

(i) In the case of oblique framing arrangement (70 degrees > Ω > 20 degrees, where Ω is defined as given in 10A.2.4(b)), linear interpolation is to be used.

10A.2.6 Framing – Local frames in bottom structures and transverse local frames in side structures.

(a) The local frames in bottom structures and transverse local frames in side structures are to be dimensioned such that the combined effects of shear and bending do not exceed the plastic strength of the member. The plastic strength is defined by the magnitude of midspan load that causes the development of a plastic collapse mechanism. For bottom structure the patch load shall be applied with the dimention (b) parallel with the frame direction.

(b) The actual net effective shear area of the frame, A_w, as defined in 10A.2.5(g), is to comply with the following condition: $A_w \geq A_t$, where:

$$A_t = 100^2 \cdot 0.5 \cdot LL \cdot s \cdot (AF \cdot PPF_t \cdot P_{avg})/(0.577 \cdot \sigma_y) \quad \text{cm}^2$$ [Eq. III 10A-22]

where:

LL = Length of loaded portion of span, lesser of a and b, in m

a = Local frame span as defined in 10A.2.5(e), in m

b = Height of design ice load patch according to Eq. III 10A-12 or 14, in m

s = Transverse frame spacing, in m

AF = Hull Area Factor from Table III 10A-5

PPF_t = Peak Pressure Factor PPF_t or PPF_s as appropriate from Table III 10A-4

P_{avg} = Average pressure within load patch according to Eq. III 10A-15, in MPa

σ_y = Minimum upper yield stress of the material, in N/ mm^2

(c) The actual net effective plastic section modulus of the plate/stiffener combination, Z_p, as defined in 10A.2.5(h), is to comply with the following condition: $Z_p \geq Z_{pt}$, where Z_{pt} is to be the greater calculated on the basis of two load conditions: a) ice load acting at the midspan of the local frame, and b) the ice load acting near a support. The A_1 parameter defined below reflects these two conditions:

$$Z_{pt} = 100^3 \cdot LL \cdot Y \cdot s \cdot (AF \cdot PPF_t \cdot P_{avg}) \cdot a \cdot A_1/(4 \cdot \sigma_y) \quad cm^3$$ [Eq. III 10A-23]

where: AF, PPF_t, P_{avg}, LL, b, s, a and σ_y are given in 10A.2.6(b);

Y	=	1 - 0.5 • (LL / a)
A_1	=	Maximum of:
A_{1A}	=	$1/\{1 + j/2 + k_w \cdot j/2 \cdot [(1 - a_1^2)^{0.5} - 1]\}$
A_{1B}	=	$[1 - 1/(2 \cdot a_1 \cdot Y)] / (0.275 + 1.44 \cdot k_z^{0.7})$
j	=	1, for a local frame with one simple support outside the ice-strengthened areas
	=	2, for a local frame without any simple supports
A_1	=	A_t / A_w
A_t	=	Minimum shear area of the local frame as given in 10A.2.6(b), in cm^2
A_w	=	Effective net shear area of the local frame (calculated according to 10A.2.5(g)), in cm^2
k_w	=	$1/(1 + 2 \cdot A_{fn} / A_w)$ with A_{fn} as given in 10A.2.5(h)
k_z	=	z_p / Z_P in general
	=	0, when the frame is arranged with end bracket
z_p	=	Sum of individual plastic section modulus of flange and shell plate as fitted, in cm^3
	=	$(b_f \cdot t_{fn}^2/4 + b_{eff} \cdot t_{pn}^2/4)/1000$
b_f	=	Flange breadth, in mm, see Fig. III 10A-4
t_{fn}	=	Net flange thickness, in mm
	=	$t_f - t_c$ (t_c as given in 10A.2.5(g))
t_f	=	As-built flange thickness, in mm, see Fig. III 10A-4
t_{pn}	=	The fitted net shell plate thickness, in mm (not to be less than t_{net} as given in 10A.2.4)
b_{eff}	=	Effective width of shell plate flange, in mm
	=	500 • s
Z_p	=	Net effective plastic section modulus of the local frame, in cm^3 (calculated according to 10A.2.5(h))

(d) The scantlings of the local frame are to meet the structural stability requirements of 10A.2.9.

10A.2.7 Framing - Longitudinal local frames in side structures

(a) Longitudinal local frames in side structures are to be dimensioned such that the combined effects of shear and bending do not exceed the plastic strength of the member. The plastic strength is defined by the magnitude of midspan load that causes the development of a plastic collapse mechanism.

(b) The actual net effective shear area of the frame, A_w, as defined in 10A.2.5(g), is to comply with the following condition: $A_w \geq A_L$, where:

$$A_L = 100^2 \cdot (AF \cdot PPF_s \cdot P_{avg}) \cdot 0.5 \cdot b_1 \cdot a/(0.577 \cdot \sigma_y) \quad cm^2$$ [Eq. III 10A-24]

where:

AF	=	Hull Area Factor from Table III 10A-5
PPF_s	=	Peak Pressure Factor from Table III 10A-4
P_{avg}	=	Average pressure within load patch according to Eq. III 10A-15, in MPa
b_1	=	$k_0 \cdot b_2$, in m
k_0	=	1 - 0.3 / b'
b'	=	b / s
b	=	Height of design ice load patch from Eq. III 10A-12 or 14, in m
s	=	Spacing of longitudinal frames, in m

b_2 = $b\,(1 - 0.25 \cdot b')$, if $b' < 2$, in m
= s, if $b' \geq 2$, in m
a = Effective span of longitudinal local frame as given in 10A.2.5(e), in m
σ_y = Minimum upper yield stress of the material, in N/mm^2

(c) The actual net effective plastic section modulus of the plate/stiffener combination, Z_p, as defined in 10A.2.5(h), is to comply with the following condition: $Z_p \geq Z_{pL}$, where:

$$Z_{pL} = 100^3 \cdot (AF \cdot PPF_s \cdot P_{avg}) \cdot b_1 \cdot a^2 \cdot A_4/(8 \cdot \sigma_y) \ \ cm^3 \qquad \text{[Eq. III 10A-25]}$$

where: AF, PPF_s, P_{avg}, b_1, a and σ_y are as given in 10A.2.7(b);

A_4 = $1/\{2 + k_{wl} \cdot [(1 - a_4^2)^{0.5} - 1]\}$
a_4 = A_L / A_W
A_L = Minimum shear area for longitudinal as given in 10A.2.7(b), in cm^2
A_w = Net effective shear area of longitudinal, in cm^2 (calculated according to 10A.2.5(g))
k_{wl} = $1/(1 + 2 \cdot A_{fn} / A_w)$, with A_{fn} as given in 10A.2.5(h)

(d) The scantlings of the longitudinals are to meet the structural stability requirements of 10A.2.9.

10A.2.8 Framing - Web frames and load carrying stringers

(a) Web frames and load-carrying stringers are to be designed to withstand the ice load patch as defined in 10A.2.3. The load patch is to be applied at locations where the capacity of these members under the combined effects of bending and shear is minimised.

(b) Web frames and load-carrying stringers are to be dimensioned such that the combined effects of shear and bending do not exceed the limit state(s) defined by the Society. Where the structural configuration is such that members do not form part of a grillage system, the appropriate peak pressure factor (PPF) from Table III 10A-4 is to be used. Special attention is to be paid to the shear capacity in way of lightening holes and cut-outs in way of intersecting members.

(c) For determination of scantlings of load carrying stringers, web frames supporting local frames, or web frames supporting load carrying stringers forming part of a structural grillage system, appropriate methods as outlines in 10A.2.17 are normally to be used.

(d) The scantlings of web frames and load-carrying stringers are to meet the structural stability requirements of 10A.2.9.

10A.2.9 Framing - structural stability

(a) To prevent local buckling in the web, the ratio of web height (h_w) to net web thickness (t_{wn}) of any framing member is not to exceed:

For flat bar sections:

$$h_w/t_{wn} \leq 282(\sigma_y)^{0.5}$$

For bulb, tee and angle sections:

$$h_w/t_{wn} \leq 805/(\sigma_y)^{0.5}$$

where:

h_w = Web height

t_{wn} = Net web thickness

σ_y = Minimum upper yield stress of the material, in N/mm^2

(b) Framing members for which it is not practicable to meet the requirements of 10A.2.9(a) (e.g. load carrying stringers or deep web frames) are required to have their webs effectively stiffened. The scantlings of the web stiffeners are to ensure the structural stability of the framing member. The minimum net web thickness for these framing members is given by:

$$t_{wn} = 2.63 \cdot 10^{-3} \cdot c_1 \sqrt{\sigma_y / \left(5.34 + 4 \cdot \left(\frac{c_1}{c_2}\right)^2\right)} \text{ mm} \qquad \text{[Eq. III 10A-26]}$$

where:

c_1 = h_w - 0.8 • h, in mm

h_w = Web height of stringer / web frame (see Fig. III 10A-5), in mm

h = Height of framing member penetrating the member under consideration, in mm (0 if no such framing member) (see Fig. III 10A-5)

c_2 = Spacing between supporting structure oriented perpendicular to the member under consideration, in mm (see Fig. III 10A-5)

σ_y = Minimum upper yield stress of the material, in N/mm^2

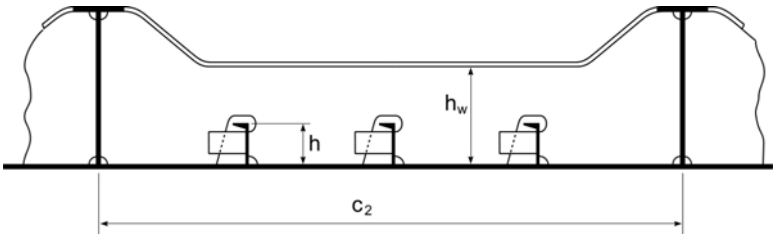

Fig. III 10A-5
Parameter Definition for Web Stiffening

(c) In addition, the following is to be satisfied:

$$t_{wn} \geq 0.35 \cdot t_{pn} \cdot (\sigma_y/235)^{0.5}$$

where:

σ_y = Minimum upper yield stress of the shell plate in way of the framing member, in N/mm^2

t_{wn} = Net thickness of the web, in mm

t_{pn} = Net thickness of the shell plate in way of the framing member, in mm

(d) To prevent local flange buckling of welded profiles, the following are to be satisfied:

(i) The flange width, b_f, in mm, is not to be less than five times the net thickness of the web

(ii) The flange outstand, b_{out}, in mm, is to meet the following requirement:

$$b_{out}/t_{fn} \leq 155/(\sigma_y)^{0.5}$$

where:

t_{fn} = Net thickness of flange, in mm

σ_y = Minimum upper yield stress of the material, in N/mm^2

10A.2.10 Plated structures

(a) Plated structures are those stiffened plate elements in contact with the hull and subject to ice loads. These requirements are applicable to an inboard extent which is the lesser of:

(i) web height of adjacent parallel web frame or stringer; or

(ii) 2.5 times the depth of framing that intersects the plated structure

(b) The thickness of the plating and the scantlings of attached stiffeners are to be such that the degree of end fixity necessary for the shell framing is ensured.

(c) The stability of the plated structure is to adequately withstand the ice loads defined in 10A.2.3.

10A.2.11 Corrosion/abrasion additions and steel renewal

(a) Effective protection against corrosion and ice-induced abrasion is recommended for all external surfaces of the shell plating for all Polar Class ships.

(b) The values of corrosion/abrasion additions, t_s, to be used in determining the shell plate thickness for each Polar Class are listed in Table III 10A-6.

Table III 10A-6
Corrosion/Abrasion Additions for Shell Plating

Hull area	t_s(mm)					
	With effective protection			Without effective protection		
	PC1-PC3	**PC4-PC5**	**PC6-PC7**	**PC1-PC3**	**PC4-PC5**	**PC6-PC7**
Bow;Bow Intermediate; Icebelt	3.5	2.5	2.0	7.0	5.0	4.0
Bow Intermediate Lower; Midbody& Stern Icebelt	2.5	2.0	2.0	5.0	4.0	3.0
Midbody and Stern Lower; Bottom	2.0	2.0	2.0	4.0	3.0	2.5

(c) Polar Class ships are to have a minimum corrosion/abrasion addition of t_s=1.0 mm applied to all internal structures within the ice-strengthened hull areas, including plated members adjacent to the shell, as well as stiffener webs and flanges.

(d) Steel renewal for ice strengthened structures is required when the gauged thickness is less than t_{net} + 0.5 mm.

10A.2.12 Materials

(a) Steel grades of plating for hull structures are to be not less than those given in Tables III 10A-8 based on the as-built thickness, the Polar Class and the material class of structural members according to 10A.2.12(b).

Table III 10A-7
Material Classes for Structural Members

Structural Members	Material Class
Shell plating within the bow and bow intermediate icebelt hull area(B,BI_i)	II
All weather and sea exposed SECONDARY and PRIMARY, as defined in Table II 1-4, structural members outside 0.4L amidships	I
Plating materials for stem and stern frames, rudder horn, rudder, propeller nozzle, shaft brackets, ice skeg, ice knife and other appendages subject to ice impact loads	II
All inboard framing members attached to the weather and sea-exposed plating, including any contiguous inboard member within 600 mm of the plating	I
Weather-exposed plating and attached framing in cargo holds of ships which by nature of their trade have their cargo hold hatches open during cold weather operations	I
All weather and sea exposed SPECIAL, as defined in Table II 1-4, structural members within 0.2L from FP	II

Table III 10A-8
Steel Grades for Weather Exposed Plating

Thickness t(mm)	Material Class I				Material Class II				Material Class III					
	PC1-PC5		**PC6-PC7**		**PC1-PC5**		**PC6-PC7**		**PC1-PC3**		**PC4-PC5**		**PC6-PC7**	
	MS	HT	MS	HT	MS	HT	MS	HT	MS	HT	MS	HT	MS	HT
t ≤ 10	B	AH	B	AH	B	AH	B	AH	E	EH	E	EH	B	AH
10 < t ≤ 15	B	AH	B	AH	D	DH	B	AH	E	EH	E	EH	D	DH
15 < t ≤ 20	D	DH	B	AH	D	DH	B	AH	E	EH	E	EH	D	DH
20 < t ≤ 25	D	DH	B	AH	D	DH	B	AH	E	EH	E	EH	D	DH
25 < t ≤ 30	D	DH	B	AH	E	EH2	D	DH	E	EH	E	EH	E	EH
30 < t ≤ 35	D	DH	B	AH	E	EH	D	DH	E	EH	E	EH	E	EH
35 < t ≤ 40	D	DH	D	DH	E	EH	D	DH	F	FH	E	EH	E	EH
40 < t ≤ 45	E	EH	D	DH	E	EH	D	DH	F	FH	E	EH	E	EH
45 < t ≤ 50	E	EH	D	DH	E	EH	D	DH	F	FH	F	FH	E	EH

Notes:

(1) Includes weather-exposed plating of hull structures and appendages, as well as their outboard framing members, situated above a level of 0.3 m below the lowest ice waterline

(2) Grades D, DH are allowed for a single strake of side shell plating not more than 1.8 m wide from 0.3 m below the lowest ice waterline.

(b) Material classes specified in Table II 1-4 are applicable to Polar Class ships regardless of the ship's length. In addition, material classes for weather and sea exposed structural members and for members attached to the weather and sea exposed plating are given in Table III 10A-7. Where the material classes in Table III 10A-7 and those in Table II 1-4 differ, the higher material class is to be applied.

(c) Steel grades for all plating and attached framing of hull structures and appendages situated below the level of 0.3 m below the lower waterline, as shown in Fig. III 10A-6, are to be obtained from Table II 1-8 and Table II 1-9 based on the material class for structural members in Table 10A-7 above, regardless of Polar Class.

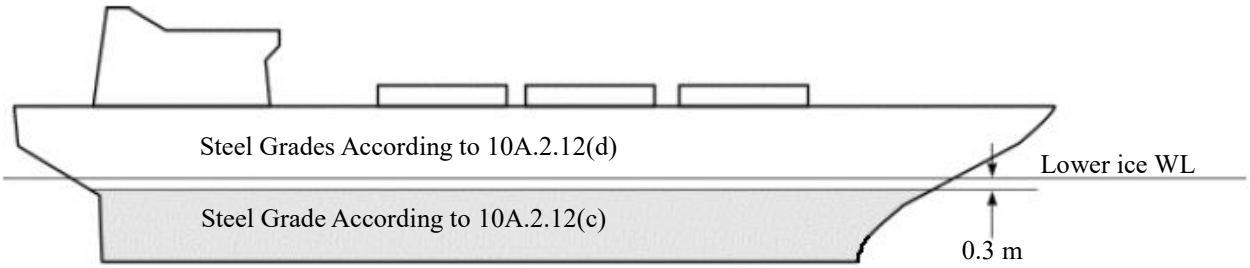

Fig. III 10A-6
Steel Grade Requirements for Submerged and Weather Exposed Shell Plating

(d) Steel grades for all weather exposed plating of hull structures and appendages situated above the level of 0.3 m below the lower ice waterline, as shown in Fig. III 10A-6, are to be not less than given in Table III 10A-8.

(e) Castings are to have specified properties consistent with the expected service temperature for the cast component.

10A.2.13 Longitudinal strength

(a) Application

(i) A ramming impact on the bow is the design scenario for the evaluation of the longitudinal strength of the hull.

(ii) Intentional ramming is not considered as a design scenario for ships which are designed with vertical or bulbous bows, see 10A.1.1(f). Hence the longitudinal strength requirements given in 10A.2.13 is not to be considered for ships with stem angle γ_{stem} equal to or larger than 80 degrees.

(iii) Ice loads are only to be combined with still water loads. The combined stresses are to be compared against permissible bending and shear stresses at different locations along the ship's length. In addition, sufficient local buckling strength is also to be verified.

(b) Design vertical ice force at the bow

(i) The design vertical ice force at the bow, F_{IB}, is to be taken as:

$$F_{IB} = \min(F_{IB,1}, F_{IB,2}) \text{ MN} \qquad \text{[Eq. III 10A-27]}$$

where:

$$F_{IB,1} = 0.534 \cdot K_I^{0.15} \cdot \sin^{0.2}(\gamma_{stem}) \cdot (D \cdot K_h)^{0.5} \cdot CF_L \text{ MN} \qquad \text{[Eq. III 10A-28]}$$

$$F_{IB,2} = 1.20 \cdot CF_F \text{ MN} \qquad \text{[Eq. III 10A-29]}$$

$K_I = K_f / K_h$, indentation parameter

(1) for the case of a blunt bow form:

$$K_f = \left[2 \cdot C \cdot B^{1-eb}/(1+e_b)\right]^{0.9} \cdot \tan(\gamma_{stem})^{-0.9(1+eb)}$$

(2) for the case of wedge bow form (α_{stem}<80 degrees)，e_b= 1 and the above simplifies to:

$$K_f = [\tan(\alpha_{stem})/\tan^2(\gamma_{stem})]^{0.9}$$

$$K_h = 0.01 \cdot A_{wp} \quad \text{MN/m}$$

CF_L = Longitudinal Strength Class Factor from Table III 10A-2

e_b = Bow shape exponent which best describes the waterplane (see Fig. III 10A-7 and Fig. III 10A-8)

= 1.0，for a simple wedge bow form

= 0.4~0.6，for a spoon bow form

= 0，for a landing craft bow form

An approximate e_b determined by a simple fit is acceptable

γ_{stem} = Stem angle to be measured between the horizontal axis and the stem tangent at the upper ice waterline(buttock angle as per Fig. III 10A-2 measured on the centerline)

α_{stem} = Waterline angle measured in way of the stem at the upper ice waterline (UIWL) (see Fig. III 10A-7)

C = $1/[2 \cdot (L_B / B)^{eb}]$

B = Ship moulded breadth, in m

L_B = Bow length used in the equation $y = B / 2 \cdot (x / L_B)^{eb}$,in m, see Fig. III 10A-7 and Fig. III 10A-8

D = Ship displacement, in kt, not to be taken less than 10 kt

A_{wp} = Ship waterplane area, in m^2

CF_F = Flexural Failure Class Factor from Table III 10A-2

Where applicable, draught dependent quantities are to be determined at the waterline corresponding to the loading condition under consideration.

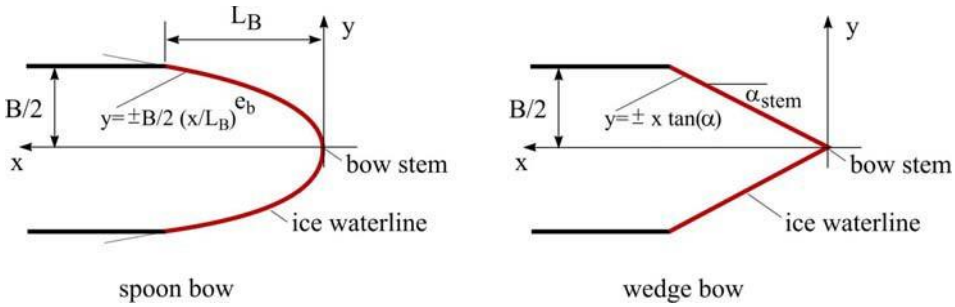

Fig. III 10A-7
Bow Shape Definition

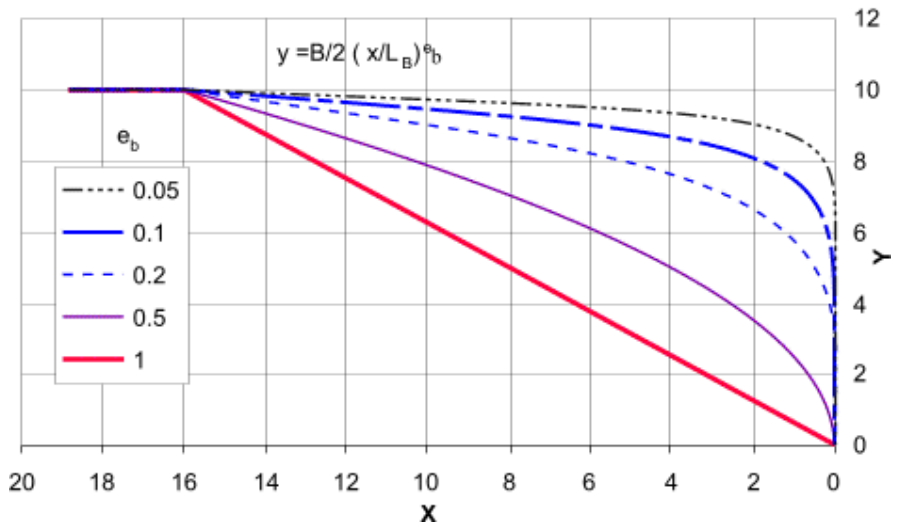

Fig. III 10A-8
Illustration of e_b Effect on the Bow Shape for B = 20 and L_B =16

(c) Design vertical shear force

(i) The design vertical ice shear force, F_I, along the hull girder is to be taken as:

$$F_I = C_f \cdot F_{IB} \quad \text{MN} \qquad \text{[Eq. III 10A-30]}$$

where:

C_f = Longitudinal distribution factor to be taken as follows:

(1) Positive shear force
C_f = 0.0，between the aft end of L and 0.6L from aft
C_f = 1.0，between 0.9 L from aft and the forward end of L

(2) Negative shear force
C_f = 0.0，at the aft end of L
C_f = -0.5，between 0.2 L and 0.6L from aft
C_f = 0.0，between 0.8 L from aft and the forward end of L
Intermediate values are to be determined by linear interpolation.

(ii) The applied vertical shear stress, τ_a, is to be determined along the hull girder in a similar manner as in Part II 3.4.4(b) by substituting the design vertical ice shear force for the design vertical wave shear force.

(d) Design vertical ice bending moment

(i) The design vertical ice bending moment, M_I, along the hull girder is to be taken as:

$$M_I = 0.1 \cdot C_m \cdot L \cdot \sin^{-0.2}(\gamma_{stem}) \cdot F_{IB} \text{ MNm} \qquad \text{[Eq. III 10A-31]}$$

where:

L	=	Ship length as defined in Part II 1.2.1, but measured on the upper ice waterline [UIWL], in m
γ_{stem}	=	As given in 10A.2.13(b)(i)
F_{IB}	=	Design vertical ice force at the bow, in MN
C_m	=	Longitudinal distribution factor for design vertical ice bending moment to be taken as follows:
	=	0.0，at the aft end of L
	=	1.0，between 0.5L and 0.7L from aft
	=	0.3，at 0.95L from aft
	=	0.0，at the forward end of L

Intermediate values are to be determined by linear interpolation.

Where applicable, draught dependent quantities are to be determined at the waterline corresponding to the loading condition under consideration.

(ii) The applied vertical bending stress, σ_a, is to be determined along the hull girder in a similar manner as in Part II 3.4.4(a), by substituting the design vertical ice bending moment for the design vertical wave bending moment. The ship still water bending moment is to be taken as the maximum sagging moment.

(e) Longitudinal strength criteria

The strength criteria provided in Table III 10A-9 are to be satisfied. The design stress is not to exceed the permissible stress.

Table III 10A-9
Longitudinal Strength Criteria

Failure mode	Applied stress	Permissible stress when $\frac{\sigma_y}{\sigma_u} \le 0.7$	Permissible stress when $\frac{\sigma_y}{\sigma_u} > 0.7$
Tension	σ_a	$\eta \cdot \sigma_y$	$\eta \cdot 0.41(\sigma_u + \sigma_y)$
Shear	τ_a	$\eta \cdot \sigma_y/(3)^{0.5}$	$\eta \cdot 0.41(\sigma_u + \sigma_y)/(3)^{0.5}$
Buckling	σ_a	σ_c for plating and for web plating of stiffeners σ_c /1.1 for stiffeners	
	τ_a	τ_c	

Where:

σ_a	=	Applied vertical bending stress, in N/mm^2
τ_a	=	Applied vertical shear stress, in N/mm^2
σ_y	=	Minimum upper yield stress of the material, in N/mm^2
σ_u	=	Ultimate tensile strength of material, in N/mm^2
σ_c	=	Critical buckling stress in compression, in N/mm^2, according to Part II 3.4
τ_c	=	Critical buckling stress in shear, in N/mm^2, according to Part II 3.4
η	=	0.8

10A.2.14 Stem and stern frames

The stem and stern frame are to be designed according to the requirements of the Society. For **PC6/PC7** ships requiring IAS/IA equivalency, the stem and stern requirements of Chapter 10 may need to be additionally considered.

10A.2.15 Appendages

(a) All appendages are to be designed to withstand forces appropriate for the location of their attachment to the hull structure or their position within a hull area.

(b) Load definition and response criteria are to be determined by the Society.

10A.2.16 Local details

(a) For the purpose of transferring ice-induced loads to supporting structure (bending moments and shear forces), local design details are to comply with the requirements of the Society.

(b) The loads carried by a member in way of cut-outs are not to cause instability. Where necessary, the structure is to be stiffened.

10A.2.17 Direct calculations

(a) Direct calculations are not to be utilised as an alternative to the analytical procedures prescribed for the shell plating and local frame requirements given in 10A.2.4, 10A.2.6 and 10A.2.7.

(b) Direct calculations are to be used for load carrying stringers and web frames forming part of a grillage system.

(c) Where direct calculation is used to check the strength of structural systems, the load patch specified in 10A.2.3 is to be applied, without being combined with any other loads. The load patch is to be applied at locations where the capacity of these members under the combined effects of bending and shear is minimised. Special attention is to be paid to the shear capacity in way of lightening holes and cut-outs in way of intersecting members.

(d) The strength evaluation of web frames and stringers may be performed based on linear or non-linear analysis. Recognized structural idealisation and calculation methods are to be applied, but the detailed requirements are to be specified by the Society. In the strength evaluation, the guidance in 10A.2.17(e) and 10A.2.17(f) may generally be considered.

(e) If the structure is evaluated based on linear calculation methods, the following are to be considered:
   (i) Web plates and flange elements in compression and shear to fulfill relevant buckling criteria as specified by the Society.
   (ii) Nominal shear stresses in member web plates to be less than $\sigma_y/\sqrt{3}$
   (iii) Nominal von Mises stresses in member flanges to be less than $1.15\sigma_y$

(f) If the structure is evaluated based on non-linear calculation methods, the following are to be considered:
   (i) The analysis is to capture buckling and plastic deformation of the structure.
   (ii) The acceptance criteria are to ensure a suitable margin against fracture and major buckling and yielding causing significant loss of stiffness.
   (iii) Permanent lateral and out-of-plane deformation of considered member are to be minor relative to the relevant structural dimensions.

(iv) Detailed acceptance criteria to be decided by the Society.

10A.2.18 Welding

(a) All welding within ice-strengthened areas is to be of the double continuous type.

(b) Continuity of strength is to be ensured at all structural connections.

10A.3 Machinery Requirements for Polar Class Ships

10A.3.1 Application

(a) The contents of this section apply to main propulsion, steering gear, emergency and essential auxiliary systems essential for the safety of the ship and the survivability of the crew.

(b) Machinery and supporting auxiliary systems shall be designed, constructed and maintained to comply with the requirements of "periodically unattended machinery spaces" with respect to fire safety. Any automation plant (i.e. control, alarm, safety and indication systems) for essential systems installed is to be maintained to the same standard.

(c) Systems, subject to damage by freezing, shall be drainable.

(d) Single screw ships classed **PC1** to **PC5** inclusive shall have means provided to ensure sufficient ship operation in the case of propeller damage including CP-mechanism.

10A.3.2 Drawings and particulars to be submitted

(a) Details of the environmental conditions and the required ice class for the machinery, if different from ship's ice class.

(b) Detailed drawings of the main propulsion machinery. Description of the main propulsion, steering, emergency and essential auxiliaries are to include operational limitations. Information on essential main propulsion load control functions.

(c) Description detailing how main, emergency and auxiliary systems are located and protected to prevent problems from freezing, ice and snow and evidence of their capability to operate in intended environmental conditions.

(d) Calculations and documentation indicating compliance with the requirements of this section.

10A.3.3 Materials

(a) Materials exposed to sea water

Materials exposed to sea water, such as propeller blades, propeller hub and blade bolts shall have an elongation not less than 15% on a test piece the length of which is five times the diameter.

Charpy V impact test shall be carried out for other than bronze and austenitic steel materials. Test pieces taken from the propeller castings shall be representative of the thickest section of the blade. An average impact energy value of 20 J taken from three Charpy V tests is to be obtained at minus 10 ºC.

(b) Materials exposed to sea water temperature

Materials exposed to sea water temperature shall be of steel or other approved ductile material.

An average impact energy value of 20 J taken from three tests is to be obtained at minus 10 ºC.

(c) Material exposed to low air temperature

Materials of essential components exposed to low air temperature shall be of steel or other approved ductile material.

An average impact energy value of 20 J taken from three Charpy V tests is to be obtained at 10 ºC below the lowest design temperature.

10A.3.4 Ice interaction load

(a) Propeller ice interaction

The Rules cover open and ducted type propellers situated at the stern of a ship having controllable pitch or fixed pitch blades. Ice loads on bow propellers and pulling type propellers shall receive special consideration. The given loads are expected, single occurrence, maximum values for the whole ships service life for normal operational conditions. These loads do not cover off-design operational conditions, for example when a stopped propeller is dragged through ice. The Rules apply also for azimuthing (geared and podded) thrusters considering loads due to propeller ice interaction. However, ice loads due to ice impacts on the body of azimuthing thrusters are not covered by 10A.3.

The loads given in section 10A.3.4 are total loads (unless otherwise stated) during ice interaction and are to be applied separately (unless otherwise stated) and are intended for component strength calculations only. The different loads given here are to be applied separately.

F_b is a force bending a propeller blade backwards when the propeller mills an ice block while rotating ahead;F_f is a force bending a propeller blade forwards when a propeller interacts with an ice block while rotating ahead.

(b) Ice class factors

Table III 10A-10 lists the design ice thickness and ice strength index to be used for estimation of the propeller ice loads.

Table III 10A-10
Factors for Ice Thickness and Ice Strength

Ice Class	H_{ice}[m]	S_{ice}[-]	S_{qice}[-]
PC1	4.0	1.2	1.15
PC2	3.5	1.1	1.15
PC3	3.0	1.1	1.15
PC4	2.5	1.1	1.15
PC5	2.0	1.1	1.15
PC6	1.75	1	1
PC7	1.5	1	1

Where: H_{ice} = Ice thickness for machinery strength design
S_{ice} = Ice strength index for blade ice force
S_{qice} = Ice strength index for blade ice torque

(c) Design ice loads for open propeller

(i) Maximum backward blade force, F_b

when $D < D_{limit}$:

$$F_b = -27 \cdot S_{ice}(nD)^{0.7} \cdot \left(\frac{EAR}{Z}\right)^{0.3} \cdot D^2 \text{ kN} \qquad \text{[Eq. III 10A-32]}$$

when $D \geq D_{limit}$:

$$F_b = -23 \cdot S_{ice}(nD)^{0.7} \cdot \left(\frac{EAR}{Z}\right)^{0.3} \cdot (H_{ice})^{1.4} D \text{ kN}$$ [Eq. III 10A-33]

where:

D_{limit} = $0.85 \cdot (H_{ice})^{1.4}$

n = The nominal rotational speed (at MCR free running condition) for CP-propeller;

= 85% of the nominal rotational speed (at MCR free running condition) for a FP-propeller (regardless driving engine type).

F_b is to be applied as a uniform pressure distribution to an area on the back (suction) side of the blade for the following load cases:

(1) Load case 1: from 0.6R to the tip and from the blade leading edge to a value of 0.2 chord length.

(2) Load case 2: a load equal to 50% of the F_b is to be applied on the propeller tip area outside of 0.9R.

(3) Load case 5: for reversible propellers a load equal to 60% of the F_b is to be applied from 0.6R to the tip and from the blade trailing edge to a value of 0.2 chord length.

See load cases 1, 2 and 5 in Table III 10A-14.

(ii) Maximum Forward Blade Force, F_f

when $D < D_{limit}$:

$$F_f = 250\left(\frac{EAR}{Z}\right)D^2 \text{ kN}$$ [Eq. III 10A-34]

when $D \geq D_{limit}$:

$$F_f = 500\left(\frac{1}{1-\frac{d}{D}}\right)H_{ice}\left(\frac{EAR}{Z}\right)D \text{ kN}$$ [Eq. III 10A-35]

where:

$$D_{limit} = \left(\frac{2}{1-\frac{d}{D}}\right)H_{ice}$$ [Eq. III 10A-36]

d = Propeller hub diameter, in m

D = Propeller diameter, in m

EAR = Expanded blade area ratio

Z = Number of propeller blades

F_f is to be applied as a uniform pressure distribution to an area on the face (pressure) side of the blade for the following loads cases:

(1) Load case 3: from 0.6R to the tip and from the blade leading edge to a value of 0.2 chord length.

(2) Load case 4: a load equal to 50% of the F_f is to be applied on the propeller tip area outside of 0.9R

(3) Load case 5: for reversible propellers a load equal to 60% F_f is to be applied from 0.6R to the tip and from the blade trailing edge to a value of 0.2 chord length.

See load cases 3, 4 and 5 in Table III 10A-14.

(iii) Maximum blade spindle torque, Q_{smax}

Spindle torque Q_{smax} around the spindle axis of the blade fitting shall be calculated both for the load cases described in 10A.3.4(c)(i) & 10A.3.4(c)(ii) for F_b and F_f. If these spindle torque values are less than the default value given below, the default minimum value shall be used.

Default value: $Q_{smax} = 0.25 \cdot F \cdot c_{0.7}$ kNm [Eq. III 10A-37]

where:

$c_{0.7}$ = Length of the blade chord at 0.7R radius, in m

F = Either F_b or F_f which ever has the greater absolute value

(iv) Maximum propeller ice torque applied to the propeller

when $D < D_{limit}$:

$$Q_{max} = 105 \cdot \left(1 - \frac{d}{D}\right) \cdot S_{qice} \cdot \left(\frac{P_{0.7}}{D}\right)^{0.16} \cdot \left(\frac{t_{0.7}}{D}\right)^{0.6} \cdot (nD)^{0.17} \cdot D^3 \text{ kNm} \quad \text{[Eq. III 10A-38]}$$

when $D \geq D_{limit}$:

$$Q_{max} = 202 \cdot \left(1 - \frac{d}{D}\right) \cdot S_{qice} \cdot H_{ice}^{1.1} \cdot \left(\frac{P_{0.7}}{D}\right)^{0.16} \cdot \left(\frac{t_{0.7}}{D}\right)^{0.6} \cdot (nD)^{0.17} \cdot D^{1.9} \text{ kNm} \quad \text{[Eq. III 10A-39]}$$

where:

D_{limit} = $1.81H_{ice}$

$t_{0.7}$ = Max thickness at 0.7R, in m

$P_{0.7}$ = Propeller pitch at 0.7R, in m

n = The rotational propeller speed, in rps, at bollard condition. If not known, n is to be taken as follows:

Table III 10A-11
n Value

Propeller Type	n
CP propellers	n_n
FP propellers driven by turbine or electric motor	n_n
FP propellers driven by diesel engine	$0.85n_n$

Where n_n is the nominal rotational speed at MCR, free running condition.

For CP propellers, propeller pitch, $P_{0.7}$ shall correspond to MCR in bollard condition. If not known, $P_{0.7}$ is to be taken as $0.7P_{0.7n}$, where $P_{0.7n}$ is propeller pitch at MCR free running condition.

(v) Maximum propeller ice thrust applied to the shaft

$T_f = 1.1F_f$ kN [Eq. III 10A-40]
$T_b = 1.1F_b$ kN [Eq. III 10A-41]

(d) Design ice loads for ducted propeller

(i) Maximum backward blade force, F_b

when $D < D_{limit}$:

$$F_b = -9.5 \cdot S_{ice} \cdot \left(\frac{EAR}{Z}\right)^{0.3} \cdot (nD)^{0.7} \cdot D^2 \quad \text{kN}$$ [Eq. III 10A-42]

when $D \geq D_{limit}$:

$$F_b = -66 \cdot S_{ice} \cdot \left(\frac{EAR}{Z}\right)^{0.3} \cdot (nD)^{0.7} \cdot H_{ice}^{1.4} \cdot D^{0.6} \quad \text{kN}$$ [Eq. III 10A-43]

where:

D_{limit} = $4H_{ice}$
D = Propeller diameter, in m
EAR = Expanded blade area ratio
Z = Number of propeller blades

n shall be taken as in 10A.3.4(c)(i).

F_b is to be applied as a uniform pressure distribution to an area on the back side for the following load cases (see Table III 10A-15):

(1) Load case 1: On the back of the blade from 0.6R to the tip and from the blade leading edge to a value of 0.2 chord length.

(2) Load case 5: For reversible rotation propellers a load equal to 60% of F_b is applied on the blade face from 0.6R to the tip and from the blade trailing edge to a value of 0.2 chord length.

(ii) Maximum forward blade force, F_f

when $D \leq D_{limit}$:

$$F_f = 250\left(\frac{EAR}{Z}\right) \cdot D^2 \quad \text{kN}$$ [Eq. III 10A-44]

when $D > D_{limit}$:

$$F_f = 500\left(\frac{EAR}{Z}\right)\cdot D\cdot\left(\frac{1}{1-\frac{d}{D}}\right)\cdot H_{ice} \quad \text{kN}$$ [Eq. III 10A-45]

where:

$$D_{limit} = \left(\frac{2}{1-\frac{d}{D}}\right)\cdot H_{ice} \quad \text{m}$$

F_f is to be applied as a uniform pressure distribution to an area on the face (pressure) side for the following load case (see Table III 10A-15):

(1) Load case 3: On the blade face from 0.6R to the tip and from the blade leading edge to a value of 0.5 chord length.

(2) Load case 5: A load equal to 60% F_f is to be applied from 0.6R to the tip and from the blade leading edge to a value of 0.2 chord length.

(iii) Maximum propeller ice torque applied to the propeller

Q_{max} is the maximum torque on a propeller due to ice-propeller interaction.

when $D \le D_{limit}$:

$$Q_{max} = 74\cdot\left(1-\frac{d}{D}\right)\cdot\left(\frac{P_{0.7}}{D}\right)^{0.16}\cdot\left(\frac{t_{0.7}}{D}\right)^{0.6}\cdot(nD)^{0.17}\cdot S_{qice}\cdot D^3 \quad \text{kNm}$$ [Eq. III 10A-46]

when $D > D_{limit}$:

$$Q_{max} = 141\cdot\left(1-\frac{d}{D}\right)\cdot\left(\frac{P_{0.7}}{D}\right)^{0.16}\cdot\left(\frac{t_{0.7}}{D}\right)^{0.6}\cdot(nD)^{0.17}\cdot S_{qice}\cdot H_{ice}^{1.1}\cdot D^{1.9} \quad \text{kNm}$$ [Eq. III 10A-47]

where:

D_{limit} = $1.8H_{ice}$

n = The rotational propeller speed, in rps, at bollard condition. If not known, n is to be taken as Table III 10A-11

(iv) Maximum blade spindle torque for CP-mechanism design, Q_{smax}

Spindle torque Q_{smax} around the spindle axis of the blade fitting shall be calculated for the load case described in 10A.3.4(d)(i) and 10A.3.4(d)(ii). If these spindle torque values are less than the default value given below, the default value shall be used.

Default value: $Q_{smax} = 0.25\cdot F\cdot c_{0.7}$ kNm [Eq. III 10A-48]

where:

$c_{0.7}$ = Length of the blade section at 0.7R radius, in m

F = Either F_b or F_f which ever has the greater absolute value

(v) Maximum propeller ice thrust (applied to the shaft at the location of the propeller)

$T_f = 1.1F_f$ kN [Eq. III 10A-49]
$T_b = 1.1F_b$ kN [Eq. III 10A-50]

(e) Design loads on propulsion line

(i) Torque

The propeller ice torque excitation for shaft line dynamic analysis shall be described by a sequence of blade impacts which are of half sine shape and occur at the blade. The torque due to a single blade ice impact as a function of the propeller rotation angle is then

$Q(\varphi) = C_q \cdot Q_{max} \cdot \sin\left[\varphi\left(\frac{180}{\alpha_i}\right)\right]$ kNm when $\varphi = 0...\alpha_i$ [Eq. III 10A-51]

$Q(\varphi) = 0$ kNm when $\varphi = \alpha_i...360$

where C_q and α_i parameters are given in Table III 10A-12:

Table III 10A-12
Values of C_q and α_i

Torque excitation	Propeller-ice interaction	C_q	α_i
Case 1	Single ice block	0.5	45
Case 2	Single ice block	0.75	90
Case 3	Single ice block	1.0	135
Case 4	Two ice blocks with 45 degree phase in rotation angle	0.5	45

The total ice torque is obtained by summing the torque of single blades taking into account the phase shift 360 deg./Z. The number of propeller revolutions during a milling sequence shall be obtained with the formula:

$N_Q = 2 \cdot H_{ice}$ [Eq. III 10A-52]

The number of impacts is ZN_Q.

See Fig. III 10A-9.

Milling torque sequence duration is not valid for pulling bow propellers, which are subject to special consideration.The response torque at any shaft component shall be analysed considering excitation torque $Q(\varphi)$ at the propeller, actual engine torque Q_e and mass elastic system.

Q_e = actual maximum engine torque at considered speed

The design torque (Q_r) of the shaft component shall be determined by means of torsional vibration analysis of the propulsion line. Calculations have to be carried out for all excitation cases given above and the response has to be applied on top of the mean hydrodynamic torque in bollard condition at considered propeller rotational speed.

(ii) Maximum response thrust

Maximum thrust along the propeller shaft line is to be calculated with the formula below. The factors 2.2 and 1.5 take into account the dynamic magnification due to axial vibration. Alternatively the propeller thrust magnification factor may be calculated by dynamic analysis.

Maximum shaft thrust forwards:

$T_r = T_n + 2.2T_f$ kN [Eq. III 10A-53]

Maximum shaft thrust backwards:

$T_r = 1.5T_b$ kN [Eq. III 10A-54]

where:

T_n = Propeller bollard thrust, in kN

T_f = Maximum forward propeller ice thrust, in kN

If hydrodynamic bollard thrust, T_n is not known, T_n is to be taken as follows:

Table III 10A-13
T_n

Propeller type	T_n
CP propellers(open)	1.25T
CP propellers (ducted)	1.1T
FP propellers driven by turbine or electric motoe	T
FP propeller driven by diesel engine (open)	0.85T
FP propeller driven by diesel engine (ducted)	0.7T

Note: T = nominal propeller thrust at MCR at free running open water conditions

(iii) Blade failure load for both open and nozzle propeller

The force is acting at 0.8R in the weakest direction of the blade and at a spindle arm of 2/3 of the distance of axis of blade rotation of leading and trailing edge which ever is the greatest.

The blade failure load is:

$$F_{ex} = \frac{0.3 \cdot c \cdot t^2 \cdot \sigma_{ref}}{0.8D - 2r} \cdot 10^3 \quad \text{kN} \qquad \text{[Eq. III 10A-55]}$$

where:

$\sigma_{ref} = 0.6\sigma_{0.2} + 0.4\sigma_u$

Where σ_u and $\sigma_{0.2}$ are representative values for the blade material.

c, t and r are respectively the actual chord length, thickness and radius of the cylindrical root section of the blade at the weakest section outside root fillet, and typically will be at the termination of the fillet into the blade profile.

10A.3.5 Design

(a) Design principle

The strength of the propulsion line shall be designed

(i) for maximum loads in 10A.3.4;

(ii) such that the plastic bending of a propeller blade shall not cause damages in other propulsion line components; and

(iii) with sufficient fatigue strength.

(b) Azimuthing main propulsors

In addition to the above requirements special consideration shall be given to the loading cases which are extraordinary for propulsion units when compared with conventional propellers. Estimation of the loading cases must reflect the operational realities of the ship and the thrusters. In this respect, for example, the loads caused by impacts of ice blocks on the propeller hub of a pulling propeller must be considered. Also loads due to thrusters operating in an oblique angle to the flow must be considered. The steering mechanism, the fitting of the unit and the body of the thruster shall be designed to withstand the loss of a blade without damage. The plastic bending of a blade shall be considered in the propeller blade position, which causes the maximum load on the studied component.

Azimuth thrusters shall also be designed for estimated loads due to thruster body/ice interaction as per 10A.2.15.

(c) Blade design

(i) Maximum blade stresses

Blade stresses are to be calculated using the backward and forward loads given in section 10A.3.4(c) & 10A.3.4(d). The stresses shall be calculated with recognised and well documented FE-analysis or other

acceptable alternative method. The stresses on the blade shall not exceed the allowable stresses σ_{all} for the blade material given below.

$$\sigma_{calc} < \sigma_{all} = \frac{\sigma_{ref}}{S}$$

where:

S = 1.5

σ_{ref} = Reference stress, defined as the following whichever is less:

$\sigma_{ref} = 0.7\sigma_u$ or [Eq. III 10A-56]

$\sigma_{ref} = 0.6\sigma_{0.2} + 0.4\sigma_u$ [Eq. III 10A-57]

Where σ_u and $\sigma_{0.2}$ are representative values for the blade material.

(ii) Blade edge thickness

The blade edge thicknesses t_{ed} and tip thickness t_{tip} are to be greater than t_{edge} given by the following formula:

$$t_{edge} \geq x \cdot S \cdot S_{ice}\sqrt{\frac{3p_{ice}}{\sigma_{ref}}} \quad \text{mm}$$ [Eq. III 10A-58]

where:

x = Distance from the blade edge measured along the cylindrical sections from the edge and shall be 2.5% of chord length, however not to be taken greater than 45 mm. In the tip area (above 0.975R radius) x shall be taken as 2.5% of 0.975R section length and is to be measured perpendicularly to the edge, however not to be taken greater than 45 mm.

S = Safety factor, 2.5 for trailing edges, 3.5 for leading edges, 5 for tip

S_{ice} = According to Table III 10A-10

p_{ice} = Ice pressure, =16MPa for leading edge and tip thickness

σ_{ref} = According 10A.3.5(c)(i)

The requirement for edge thickness has to be applied for leading edge and in case of reversible rotation open propellers also for trailing edge. Tip thickness refers to the maximum measured thickness in the tip area above 0.975R radius. The edge thickness in the area between position of maximum tip thickness and edge thickness at 0.975 radius has to be interpolated between edge and tip thickness value and smoothly distributed.

(d) Prime movers

(i) The Main engine is to be capable of being started and running the propeller with the CP in full pitch.

(ii) Provisions shall be made for heating arrangements to ensure ready starting of the cold emergency power units at an ambient temperature applicable to the Polar class of the ship.

(iii) Emergency power units shall be equipped with starting devices with a stored energy capability of at least three consecutive starts at the design temperature in 10A.3.5(d)(ii) above. The source of stored energy shall be protected to preclude critical depletion by the automatic starting system, unless a second independent means of starting is provided. A second source of energy shall be provided for an additional three starts within 30 min., unless manual starting can be demonstrated to be effective.

10A.3.6 Machinery fastening loading accelerations

(a) Essential equipment and main propulsion machinery supports shall be suitable for the accelerations as indicated in as follows. Accelerations are to be considered acting independently.

(b) Longitudinal Impact Accelerations, a_I

Maximum longitudinal impact acceleration at any point along the hull girder:

$$a_I = \left(\frac{F_{IB}}{\Delta}\right) \cdot \left\{[1.1 \cdot \tan(\gamma + \varphi)] + \left(7\frac{H}{L}\right)\right\} \quad m/s^2$$ [Eq. III 10A-59]

where:

φ = Maximum friction angle between steel and ice, normally taken as 10 degree

γ = Bow stem angle at waterline, in degree

Δ = Displacement, in kt

L = Length between perpendiculars, in m

H = Distance in meters from the waterline to the point being considered, in m

F_{IB} = Vertical impact force, defined in 10A.2.13(b)(i)

(c) Vertical acceleration, a_v

Combined vertical impact acceleration at any point along the hull girder

$$a_v = 2.5 \cdot \left(\frac{F_{IB}}{\Delta}\right) \cdot F_X \quad m/s^2$$ [Eq. III 10A-60]

where:

F_X = 1.3 at FP

= 0.2 at midships

= 0.4 at AP

= 1.3 at AP for ships conducting ice breaking astern

Intermediate values to be interpolated linearly.

(d) Transverse impact

Combined transverse impact acceleration at any point along hull girder

$$a_t = 3F_i \cdot \frac{F_X}{\Delta} \quad m/s^2$$ [Eq. III 10A-61]

where:

F_X = 1.5 at FP

= 0.25 at midships

= 0.5 at AP

= 1.5 at AP for ships conducting ice breaking astern

Intermediate values to be interpolated linearly.

F_i = Total force normal to shell plating in the bow area due to oblique ice impact, defined in 10A.2.3(b)(ii)

10A.3.7 Auxiliary systems

(a) Machinery shall be protected from the harmful effects of ingestion or accumulation of ice or snow. Where continuous operation is necessary, means should be provided to purge the system of accumulated ice or snow.

(b) Means should be provided to prevent damage due to freezing, to tanks containing liquids.

(c) Vent pipes, intake and discharge pipes and associated systems shall be designed to prevent blockage due to freezing or ice and snow accumulation.

10A.3.8 Sea inlets and cooling water systems

(a) Cooling water systems for machinery that are essential for the propulsion and safety of the ship, including sea chests inlets, shall be designed for the environmental conditions applicable to the ice class.

(b) At least two sea chests are to be arranged as ice boxes for class **PC1** to **PC5** inclusive where. The calculated volume for each of the ice boxes shall be at least 1 m^3 for every 750 kW of the total installed power. For **PC6** and **PC7** there shall be at least one ice box located preferably near center line.

(c) Ice boxes are to be designed for an effective separation of ice and venting of air.

(d) Sea inlet valves are to be secured directly to the ice boxes. The valve shall be a full bore type.

(e) Ice boxes and sea bays are to have vent pipes and are to have shut off valves connected direct to the shell.

(f) Means are to be provided to prevent freezing of sea bays, ice boxes, ship side valves and fittings above the load waterline.

(g) Efficient means are to be provided to re-circulate cooling seawater to the ice box. Total sectional area of the circulating pipes is not to be less than the area of the cooling water discharge pipe.

(h) Detachable gratings or manholes are to be provided for ice boxes. Manholes are to be located above the deepest load line. Access is to be provided to the ice box from above.

(i) Openings in ship sides for ice boxes are to be fitted with gratings, or holes or slots in shell plates. The net area through these openings is to be not less than 5 times the area of the inlet pipe. The diameter of holes and width of slot in shell plating is to be not less than 20 mm. Gratings of the ice boxes are to be provided with a means of clearing. Clearing pipes are to be provided with screw-down type non return valves.

10A.3.9 Ballast tanks

Efficient means are to be provided to prevent freezing in fore and after peak tanks and wing tanks located above the water line and where otherwise found necessary.

10A.3.10 Ventilation system

(a) The air intakes for machinery and accommodation ventilation are to be located on both sides of the ship.

(b) Accommodation and ventilation air intakes shall be provided with means of heating.

(c) The temperature of inlet air provided to machinery from the air intakes shall be suitable for the safe operation of the machinery.

10A.3.11 Alternative design

As an alternative – a comprehensive design study may be submitted and may be requested to be validated by an agreed test programme.

Table III 10A-14
Load Cases for Open Propeller

	Force	Loaded area	Right handed propeller blade seen from back
Load case 1	F_b	Uniform pressure applied on the back of the blade(suction side) to an area from 0.6R to the tip and from the leading edge to 0.2 times the chord length	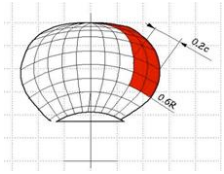
Load case 2	50% of F_b	Uniform pressure applied on the back of the blade (suction side) on the propeller tip area outside of 0.9R radius.	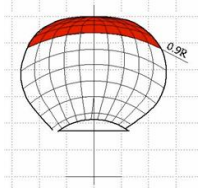
Load case 3	F_f	Uniform pressure applied on the blade face (pressure side) to an area from 0.6R to the tip and from the leading edge to 0.2 times the chord length.	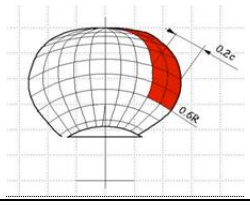
Load case 4	50% of F_f	Uniform pressure applied on propeller face (pressure side) on the propeller tip area outside of 0.9R radius.	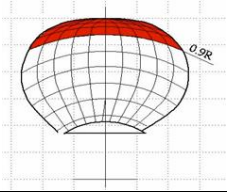
Load case 5	60% of F_f or 60% of F_b which one is greater	Uniform pressure applied on propeller face (pressure side) to an area from 0.6R to the tip and from the trailing edge to 0.2 times the chord length.	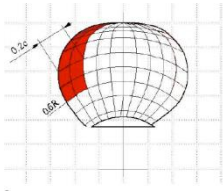

Table III 10A-15
Load Cases for Ducted Propeller

	Force	Loaded area	Right handed propeller blade seen from back
Load case 1	F_b	Uniform pressure applied on the back of the blade (suction side) to an area from 0.6R to the tip and from the leading edge to 0.2 times the chord length.	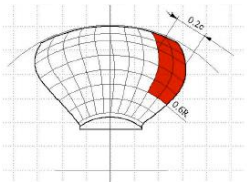
Load case 3	F_f	Uniform pressure applied on the blade face (pressure side) to an area from 0.6R to the tip and from the leading edge to 0.5 times the chord length.	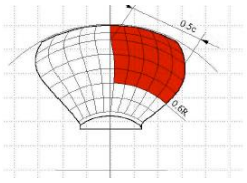
Load case 5	60% of F_f or 60% of F_b which one is greater	Uniform pressure applied on propeller face (pressure side) to an area from 0.6R to the tip and from the trailing edge to 0.2 times the chord length.	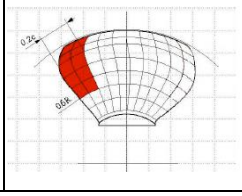

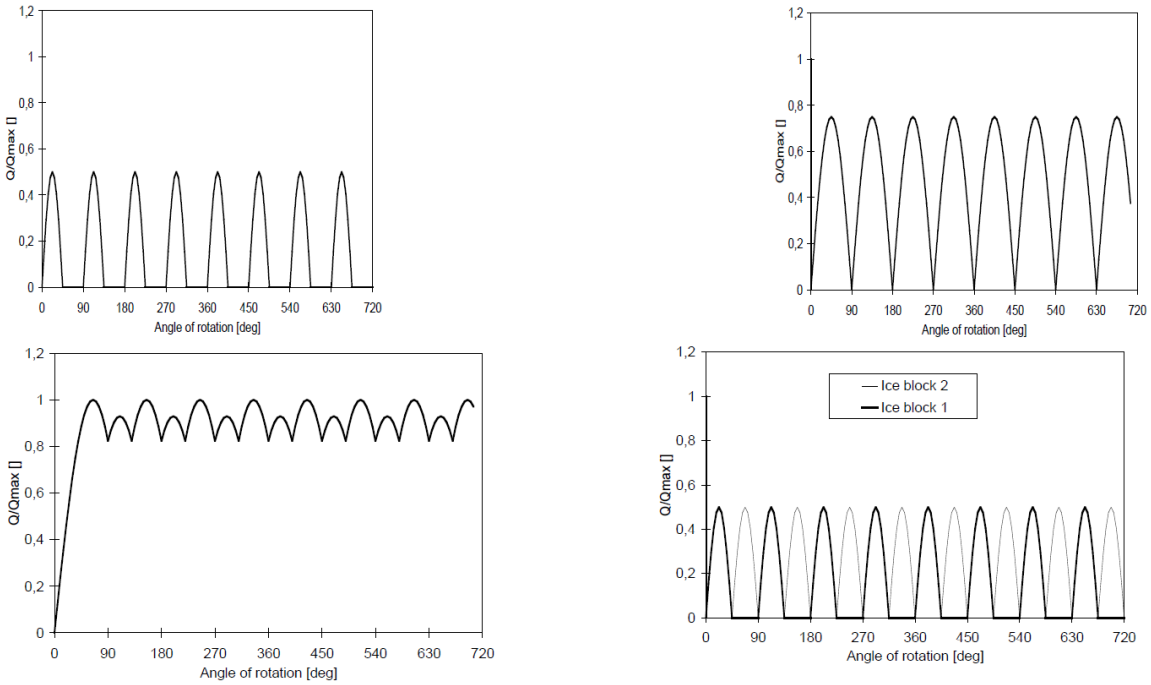

Fig. III 10A-9
The Shape of the Propeller Ice Torque Excitation for 45, 90, 135 Degrees Single Blade Impact Sequences and 45 Degrees Double Blade Impact Sequence (Two Ice Pieces) on a Four-Bladed Propeller

Chapter 11
Tugs

11.1 General

11.1.1 This chapter applies to tugs classed in accordance with the provision in Chapter 1 of Part I and built for the purpose of towing or pushing other vessels.

11.1.2 Except otherwise provided in this chapter, the requirements given in Part II are to be applied.

11.1.3 Tugs built in accordance with the Rules are to be assigned a service notation of **Tug** affixed to classification symbols.

11.2 Longitudinal Strength

11.2.1 Longitudinal strength is to be calculated in accordance with the relevant requirements given in Part II.

11.3 Hull Construction

11.3.1 For determination of scantlings of tugs, the draught d used is not less than 85 % of the moulded depth.

11.3.2 The shell plating at fore end is to have a thickness 0.5 mm larger than that required in 7.2 or 7.3 of Part II whichever is greater.

11.3.3 The thickness of strength deck plating is to comply with the relevant requirement in 11.3 of part II, but the minimum thickness for outside line of opening is to have 1 mm larger than that required in 11.3.1 of Part II.

11.3.4 Tugs designed to use the bow for pushing floating structures

If a tug is designed to use the bow for pushing floating structures, the additional strength in the fore peak shall be considered and in accordance with following requirements. Forward collision bulkhead horizontal girders are to be arranged on ship's side not more than 2 meters apart. The girders are to be connected to the collision bulkhead by brackets forming gradual transition to the bulkhead. The dimensions of the girders are not less than the followings:

Mean depth	=	250 + 2.5 sL	mm
Thickness	=	6.5 + 0.03 L	mm
Flange area	=	0.15 sL	cm²

where :

s = Span of horizontal girder, in m.

L = Ship length, in m.

The frames are to be connected to the girders by lugs and flat bar stiffeners at every frame.

11.3.5 For plate stems, the thickness of the plates is to be increased by 2 mm above the requirements in 2.1.1 of Part II.

11.3.6 The depth and breadth of beam knees connecting the upper deck beam to frames, measured from the point of intersection of the inner edges of the beam and frame, are to be not less than 2.5 times the depth of the beam. The thickness of the knees is not to be less than that of the web plate of the beam. The scantlings of beam knees are also to comply with the requirements in 9.4.1 of Part II.

11.4 Bulwarks and Fenders

11.4.1 Tugs are to be provided with tumblehome bulwarks and the thickness t of bulwarks plating is to be not less than the following requirements :

$t = 5$ mm for $L \leq 30$ m
$t = 7$ mm for $L \geq 50$ m

where:
L = Ship length, in m.
For intermediate values of L, t is be determined by interpolation.

11.4.2 The bulwarks are to be supported by stays with a flange or face plate. The stays are to be spaced not more than two frame spaces apart and are to in line with deck beam.

11.4.3 A substantial fender for the protection of the vessel's side is to be fitted at deck level, extending the whole length of the vessel. Alternatively, an arrangement with loose fenders may be approved, if the upper part of the vessel's side is additionally stiffened.

11.5 Machinery Casings and Escape Hatches

11.5.1 The height of exposed machinery casings is to be not less than 900 mm. The stiffeners of the casings are to be spaced not more than 750 mm and the section modulus of the stiffeners and the thickness of the plating of the casing are to be the same as the requirement in 18.2 of Part II.

11.5.2 Engine rooms are to be fitted with escape hatches. Any escape hatch is to be capable of being used at extreme angles of heel. Escape hatches are to be positioned as high as possible above the waterline and on or near the ship's centerline. The height of hatch coaming is to be at least 600 mm above the upper surface of the deck. The escape hatch covers are to have hinges arranged athwartships. The covers are to be capable of being opened or closed easily both from inside and outside the engine room. When closed, they need to maintain weathertight.

11.6 Side Scuttles

11.6.1 Side scuttles are not allowed in the vessel's side unless the distance from the lower edge of side scuttles to the design waterline is at least 750 mm. Side scuttle in the vessel's side and in sides of any superstructures are to be provided with internally fitted, hinged deadlights. Fixed lights in skylight etc. are to have glasses of thickness appropriate to their position as required for side scuttles, and fitted with hinged deadlights which may be arranged on the weather side.

11.7 Towing Arrangement

11.7.1 Towing gear and towing arrangement

(a) Design standard

The equipment is to meet the requirements in this Chapter. Alternatively equipment complying with recognized standard may be accepted on a case-by-case basis, provided such specifications give equivalence

to the requirements of this Chapter and is fulfilling the intention. The drawings for towing arrangement listed below are to be posted on bridge.

(i) Arrangement plan is to include the following infromation:

(1) Towline paths showing extreme sectors and wrap on towing equipment towline points of attack

(2) Maximum continuous bollard pull, F_{bp}

(3) Maximum design load for each component

(4) Emergency release capabilities

(ii) Test procedure for quay and sea trial is to include the following information:

(1) Static bollard pull test procedure refer to 11.9 of this Chapter.

(2) Winch and other equipment required by this Chapter.

(b) General requirements

The towing gear is to be arranged in such a way as to minimize the danger of capsizing; the towing hook/working point of the towing force is to be placed as low as practicable.

With direct-pull (hook-towline), the towing hook and its radial gear are to be designed such as to permit adjusting to any foreseeable towline direction.

The attachment point of the towline is to be arranged closely behind the centre of buoyancy.

For tugs equipped with a towing winch, the arrangement of the equipment is to be such that the towline is led to the winch drum in a controlled manner under all foreseeable conditions (directions of the towline).

Towline protection sleeves or other adequate means is to be provided to prevent the directly pulled towlines from being damaged by chafing or abrasion.

(c) Definition of loads

The design force (F_d), in kN, corresponds to the towline pull (or the bollard pull, if the towline pull is not defined) as specified. The design force may be verified by a static bollard pull test, see 11.9 of this Chapter.

The test force (F_t) is used for dimensioning as well as for testing the towing hook and connected elements. The test force is related to the design force as shown in Table III 11-1 of this Chapter.

Table III 11-1
Design Force (F_d) and Test Force (F_t)

Design force, F_d (kN)	Test force, F_t (kN)
$F_d \leq 500$	$2.00 \times F_d$
$500 < F_d \leq 1500$	$F_d + 500$
$1500 \leq F_d$	$1.33 \times F_d$

Note: The minimum breaking force of the towline is based on the design force (F_d), see 11.7.4(c) of this Chapter.

The winch holding capacity is to be based on the minimum breaking force, see 11.7.5(c) of this Chapter, the rated winch force is the hauling capacity of the winch drive when winding up the towline.

For forces at the towing hook foundation see 11.7.3(e) of this Chapter.

11.7.2 Material for towing equipment

(a) Towing hook with attachment is to be made of rolled, forged or cast steel in accordance with Part XI.

(b) Towing winch materials are to comply with relevant requirements given in Part XI.

(c) For forged and cast steel with minimum specified tensile strength above 650 N/mm^2, specifications of chemical composition and mechanical properties are to be submitted for approval for the equipment in question.

(d) Plate material in welded parts is to be of the grades as given in Table III 16-6 of this Part.

(e) When the specified minimum upper yield stress (R_{eH}) is greater than 80% of the minimum specified tensile strength (R_m), the following value is to be used as R_{eH} in calculations for structural strength as given in 11.7.5 of this Chapter:

$R_{eH} = \min (R_{eH} ; 0.8R_m)$

11.7.3 Towing hook and quick release

(a) The towing hook is to be fitted with an adequate device guaranteeing slipping, i.e. emergency release, of the towline in case of an emergency. Slipping is to be possible from the bridge as well as from at least one other place in the vicinity of the hook itself, from where in both cases the hook can be easily seen.

(b) The towing hook is to be equipped with a mechanical, hydraulic or pneumatic quick release. The quick release is to be designed such as to guarantee that unintentional slipping is avoided.

(c) A mechanical quick release is to be designed such that the required release force under test force F_t does not exceed neither 150 N at the towing hook nor 250 N when activating the device on the bridge. In case of a mechanical quick release, the releasing rope is to be guided adequately over sheaves. If necessary, slipping should be possible by downward pulling, using the whole body weight.

(d) Where a pneumatic or hydraulic quick release is used, a mechanical quick release is to be provided additionally.

(e) Dimensioning of towing hook and towing gear

The dimensioning of the towing gear is based on the test force F_t, see 11.7.1(c) of this Chapter.

The towing hook, the towing hook foundation, the corresponding substructures and the quick release are to be designed for the following directions of the towline:

(i) For a test force $F_t \leq 500$ kN:

- in the horizontal plane, directions from abeam over astern to abeam
- in the vertical plane, from horizontal to 60° upwards

(ii) For a test force $F_t > 500$ kN

- in the horizontal plane, as above
- in the vertical plane, from horizontal to 45° upwards.

Assuming the test force F_t acting in any of the directions described in (i) and (ii) above, the permissible stresses in the towing equipment elements defined above are not to exceed the values shown in Table III 11-2 of this Chapter. For the towing hook foundation it shall be additionally proven that the permissible stresses given in Table III 11-2 of this Chapter are not exceeded assuming a load equal to the minimum breaking force F_{min}, in kN, of the towline.

Table III 11-2
Permissible Stresses

Type of stress	Permissible stress
Axial and bending tension and axial and bending compression with box type girders and tubes	$\sigma = 0.83R_{eH}$
Axial and bending compression with girders of open cross sections or with girders consisting of several members	$\sigma = 0.72R_{eH}$
Shear	$\tau = 0.48R_{eH}$
Equivalent stress	$\sigma_{vm} = 0.85R_{eH}$

11.7.4 Towlines

(a) Towline materials are to be in accordance with the requirements given in 25.5 of Part II. All wire ropes should have as far as possible the same lay.

(b) The length of the towline is to be chosen according to the tow formation (masses of tug and towed object), the water depth and the nautical conditions. Regulations of flag state are to be observed.

(c) The required minimum breaking force F_{min}, in kN, of the towline shall be determined by the following formula:

$F_{min} = KF_d$

where:

K	=	2.5	for $F_d \leq 200$ kN
	=	$2.625-(F_d/1600)$	for $200 \text{ kN} < F_d < 1000$ kN
	=	2.0	for $F_d \geq 1000$ kN
F_d	=	Design force, in kN, as specified in 11.7.1(c) of this Chapter.	

(d) For ocean towing, at least one spare towline with attachments is to be available on board.

11.7.5 Towing winch

(a) Arrangement and control

The towing winch, including towline guiding equipment, is to be arranged such as to guarantee safe guiding of the towline in all directions according to 11.7.3(e) of this Chapter.

The winch is to be capable of being safely operated from all control stands. Apart from the control stand on the bridge, at least one additional control stand is to be provided on deck. From each control stand the winch drum is to be freely visible; where this is not ensured, the winch is to be provided with a self-rendering device.

Each control stand is to be equipped with suitable operating and control elements. The arrangement and the working direction of the operating elements are to be analogous to the direction of motion of the towline. Operating levers are to, when released, automatically return to the stop position. They are to be capable of being secured in the stop position.

It is recommended that, on vessels for ocean towing, the winch is fitted with equipment for measuring the pulling force in the towline.

If, during normal operating conditions, the power for the towing winch is supplied by a main engine shaft generator, another generator is to be available to provide power for the towing winch in case of main engine or shaft generator failure.

(b) Winch drum

Specific requirements for winch drums:

(i) The towline is to be fastened on the winch drum by a breaking link.

(ii) The winch drum is to be capable of being declutched from the drive.

(iii) The diameter of the winch drum is to be not less than 14 times the towline diameter. However, for all towline types, the towline bending radius should not be less than specified by the towline manufacturer.

(iv) To ensure security of the rope end fastening, at least 3 dead turns are to remain on the drum.

(v) At the ends, drums are to have disc sheaves whose outer edges shall surmount the top layer of the rope at least by 2.5 rope diameters, if no other means is provided to prevent the rope from slipping off the drum.

(vi) If a multi-drum winch is used, then each winch drum is to be capable of independent operation.

(vii) Items (iii) and (iv) above are not applicable to towlines of austenitic steels and fibre ropes. In case these towline materials are utilized, dimensioning of the winch drum is subject to the Society's approval.

(c) Holding capacity/dimensioning

The holding capacity of the towing winch (towline in the first layer) is to correspond to 80% of the minimum breaking load F_{min} of the towline.

When dimensioning the towing winch components, which with the brake engaged are exposed to the pull of the towline (rope drum, drum shaft, brakes, foundation frame and its fastening to the deck), a design tractive force equal to the holding capacity shall be assumed. When calculating the drum shaft the dynamic stopping forces of the brakes is to be considered. The drum brake is not to give way under this load.

(d) Brakes

If the drum brakes are power-operated, manual operation of the brake is to be provided additionally.

Drum brakes are to be capable of being quickly released from the control stand on the bridge, as well as from any other control stand. The emergency release is to be functional under all working conditions, including failure of the power drive.

The operating levers for the brakes are to be secured against unintentional operation.

Following operation of the emergency release device, normal operation of the brakes are to be restored immediately.

Following operation of the emergency release device, the winch driving motor are not to start again automatically.

Towing winch brakes are to be capable of preventing the towline from paying out when the vessel is towing at the design force F_d and are to be not be released automatically in case of power failure.

(e) Tricing winches

Control stands for the tricing winches are to be located at safe distance off the sweep area of the towing gear. Apart from the control stands on deck, at least one other control stand is to be available on the bridge. Tricing winches are not subject to classification. In order to assess the supporting structure, maximum reaction forces and its locations are to be provided.

(f) Emergency release

The winch is to be designed to allow drum release in an emergency, and in all operational modes.

The release capabilities are to be as specified on towing arrangement drawing.

The action to release the drum is to be possible locally at the winch and from a position at the bridge with full view and control of the operation. Identical means of equipment for the release operation to be used on all release stations.

After an emergency release the winch brakes are to be in normal function without delay. It shall always be possible to carry out the emergency release sequence (emergency release and/or application of brake), even during a black-out.

Control handles, buttons etc. for emergency release are to be protected against unintentional operation.

11.7.6 Scantlings of deck girders and transverses forming the support structure of towing equipment are to be determined by direct calculations using the following stresses:

$$\tau = \frac{87}{K} \quad N/mm^2$$

$$\sigma = \frac{150}{K} \quad N/mm^2$$

$$\sigma_e = \frac{213}{K} \quad N/mm^2$$

where :

τ = Shear stress, in N/mm^2.

σ = Bending stress, in N/mm^2.

σ_e = Equivalent stress, $\sqrt{\sigma^2 + 3\tau^2}$ in N/mm^2.

K = Material factor as specified in 1.5.2(a) of Part II.

11.7.7 Marking

Equipment is to be marked to enable them to be readily related to their specifications and manufacturer. When the Society's product certificate is required, the equipment shall be clearly marked by the Society for identification.

11.8 Stability

11.8.1 General stability requirements

(a) The requirements in this Chapter apply to vessels with freeboard length L_f of 24 meters and above.

(b) Vessels with a freeboard length L_f less than 24 meters should as far as practicable comply with the requirements given in this Chapter. Other stability requirements may however be applied provided the Society upon consideration in each case finds these requirements to be appropriate for the vessel.

(c) The vessel's stability is to be assessed when the towing line is not in line with the vessel's longitudinal centre line. The towing heeling moment is to be calculated based on the assumption in 11.8.2 as below. The criterion in 11.8.3 of this Chapter is to be complied with.

11.8.2 Towing heeling moment

A transverse heeling moment generated by the rudder and propulsion system with maximum thrust and rudder(s) hard over is assumed to act horizontally on the towline as a static transverse force derived from the maximum bollard pull. No vertical force is assumed.

A heeling lever curve as a function of the heeling angle is to be calculated as

$$T_L = \frac{F_{bp}\, C_T\, h \cos\theta}{\Delta}$$

where:

Δ = Displacement, in t.
The displacement, LCG and VCG for the initial loading condition is assumed to remain unchanged.

If the vessel is intended to operate with additional transverse thrusters the heeling lever generated by the propulsion system is to be increased in proportion to the heeling moment generated by such thrusters.

F_{bp} = Maximum continuous bollard pull, in t. measured in accordance with 11.9 of this Chapter.

C_T = A transverse thrust and rudder force reduction factor depending on the propulsion arrangement.

= 0.6

For conventional single or twin propeller propulsion systems with rudders and fixed or no propeller nozzles. This value is increased to 0.7 for ships fitted withmoveable nozzles.

= 1.0

For single azimuth thrusters (Z-drives) acting normal to the centreline and for cycloidal drives a value of 1.0 is to be applied.

= $(1 + \cos \gamma) / 2$

For two azimuth thrusters, where γ is the offset angle that occurs between the thruster jets when one unit is directed at a right angle to the ship's centreline and the other is directed so that its thrust jet tangentially intersects the nozzle of the first.

= Other values

For C_T may be accepted if substantiated by calculations

h = The towing heeling arm, in m, taken as the vertical distance between the centre of propeller(s) and the fastening point of the towline.

11.8.3 Stability criterion for tugs

The residual area between the righting lever curve and the heeling lever curve calculated in accordance with 11.8.2 above is not to be less than 0.09 meter-radians. The area is determined from the first interception of the two curves to the angle of the second interception or the angle of down flooding, whichever is less.

Alternatively, the area under the righting lever curve is not to be less than 1.4 times the area under the heeling lever curve calculated in accordance with 11.8.2 above. The areas are determined between 0° and the angle of the second interception or the angle of down flooding, whichever is less.

11.8.4 Stability criteria for ocean towing

For ships intended only for towing operations where the towline is secured against transverse movement near the aft perpendicular the following criteria may be applied in lieu of 11.8.1(c) of this Chapter:

The residual area between the righting lever curve and the heeling lever curve calculated in accordance with 11.8.2 of this Chapter is not to be less than 0.055 meter-radians. The area is determined from the first interception of the two curves to the angle of the second interception or the angle of down flooding, whichever is less.

The static angle at the first interception is not to be more than 15°.

11.8.5 Additional information

The vessel's stability manual is to contain additional information in on the maximum bollard pull, the assumed location of the fastening point of the towline, heeling force and moment and identification of critical flooding points. The heeling lever curve is to be plotted on the GZ curve for all intended towing conditions.

11.9 Static Bollard Pull Test

11.9.1 The static bollard pull test procedure is to be submitted for review in advance of the test.

11.9.2 The first vessel of a series is to have a bollard pull test conducted. The requirements for conducting a bollard pull test on vessels of duplicate design and built in a series will be specially considered on a case-by-case basis. However, a bollard pull test certificate will only be issued to those vessels with the **BP** notation and the bollard pull test is actually carried out.

11.9.3 The static bollard pull is to be measured with the tug at the maximum continuous rpm and at or near the maximum towing draft.

11.9.4 The static bollard pull is the pull that is recorded over the state of equilibrium without any tendency to decline.

11.9.5 The static bollard pull test requirements

The static bollard pull test is to be complying with the following requirements. Where the test requirements of the static bollard pull test is in compliance with MSC/Circ. 884, it may be deemed as acceptable at the discretion of the Society.

(a) The towing vessel should be on an even keel or trimmed to the intended operating condition in tow.

(b) The draft of the towing vessel should be equal to or deeper than ballast condition, but need not be down to the summer load line mark.

(c) Depth of water under the keel and on each side of the vessel should be at least 2 × vessel draft at midship.

(d) If current exceeds 1 knot, its effect is to be subtracted from the bollard pull by direct measurement of drag effect (pulling direction downstream) and reduction of bollard pull accordingly; or, conducting pull test both upstream and downstream and averaging the results.

(e) The distance from the stern of the towing vessel to the bollard (fixed point) should be at least two ship lengths and be unobstructed by submerged pilings, bulwarks, etc.

(f) Wind speed should be 4.5 m/s (10 mph) or less, or such that it does not measurably affect the bollard pull results.

(g) Sea condition should be calm.

(h) The structural adequacy of the towing hawser, towing winch or tow bitts employed during the test should be satisfied.

(i) The dynamometer (load cell) used for the test should be calibrated and suitable for use in the horizontal position. It should be fitted with swivels or should be torque insensitive, such as a hydraulic dynamometer. It should be easily read from a safe location or a remote readout should be provided. A continuous recording device is suggested but not mandatory. It is suggested that the maximum scale reading be, as a minimum, at least equal to Max. Cont. Total H.P. × 0.22 kN. The dynamometer should be located at the ashore end of the tow hawser.

(j) The vessel's main engines should not be adjusted to operate in overload condition. Engine overspeed trip setting should be verified prior to commencing the test.

(k) The steady bollard pull should be computed as the average of evenly spaced load cell recordings taken over a sustained pull interval of 3 to 5 minutes. If the tow hawser is not horizontal, the vertical angle of the hawser is to be measured and used to obtain the actual horizontal thrust.

(l) Engine temperatures should be at steady state during the test run. Engines should be operated at the maximum continuous horsepower (certified horsepower per the record) during the test. Instantaneous spike bollard pull readings should be ignored.

(m) A two-way voice communication system is to be provided for the shore and the engine room.

(n) The vessel's stability information should include the towing condition.

Chapter 11A

Escort Tugs

11A.1 Class Notations

11A.1.1 The requirements in this chapter apply to vessels specially intended for escort service.

11A.1.2 Vessels built in compliance with the requirements in this chapter may be given the class notation **Escort Tug**. in accordance with Chapter 1 of Part I.

11A.1.3 The escort rating number (**F_S, t, v**) is to be determined by approved full scale trials, performed within acceptable limits set by stability and winch criteria specified in this chapter. A test certificate indicating the escort rating number may be issued on completion of successful full scale trials. If trials take place at both 8 and 10 knots, the escort rating number will consist of 6 parts.

11A.1.4 The requirements for **Tug** notation given in Chapter 11 are to be complied with. The winch, crucifix etc. and their supporting structures are to comply with the requirements for Tug notation based on towline force F_W (see Fig. III 11A-1) instead of BP.

11A.2 Definitions

11A.2.1 The term Escort service includes steering, braking and otherwise controlling the assisted vessel. The steering force is provided by the hydrodynamic forces acting on the tug's hull. The term Escort test speed is the speed at which the full scale measurements are to be carried out, normally 8 knots and/or 10 knots.

11A.2.2 The term Escort tug is the tug performing the escort service.

11A.2.3 F_S indicates maximum transverse steering pull in metric tonnes exerted by the escort tug on the stern of the assisted vessel with the intention of controlling it, t is the time in seconds required for the change of the tug's position from one side to the corresponding opposite side, and v is the speed in knots at which this pull may be attained (see Fig. III 11A-1).

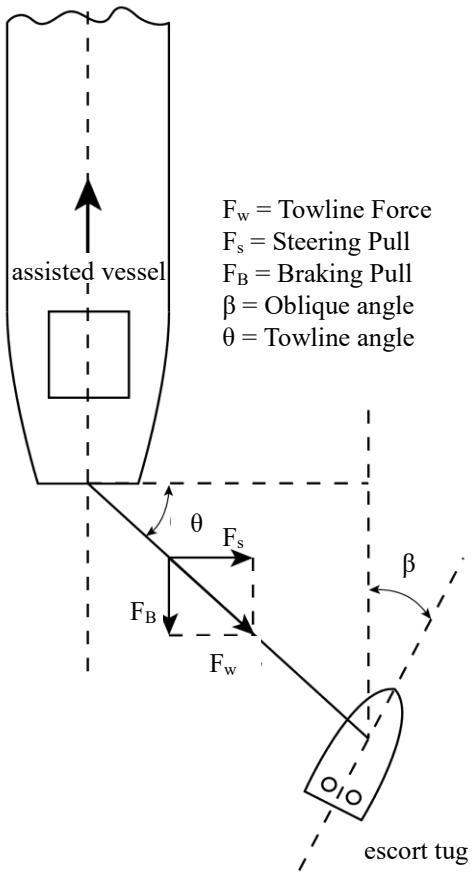

Fig. III 11A-1
Typical Escort Configuration

11A.3 Design and Arrangement

11A.3.1 The hull of the tug is to be designed to provide adequate hydrodynamic lift and drag forces when in indirect towing mode. Due attention is to be paid to the balance between hydrodynamic forces, towline pull and propulsion forces, as well as sudden loss of thrust.

11A.3.2 The vessel is to be designed so that forces are in equilibrium with a minimum use of propulsive force except for providing forward thrust and balancing transverse forces during escorting service.

11A.3.3 The propulsion system is to be able to provide ample thrust for manoeuvring at higher speeds for the tug being in any oblique angular position.

11A.3.4 In case of loss of propulsion, the remaining forces are to be so balanced that the resulting turning moment will turn the escort tug to a safer position with reduced heel.

11A.3.5 Freeboard is to be arranged so as to avoid excessive trim at higher heeling angles. Bulwark is to be fitted all around exposed weather deck.

11A.3.6 The towing winch is to have a hydraulic load reducing system in order to prevent overload caused by dynamic oscillation in the towing line. Normal escort operation is not to be based on use of brakes on the towing winch, but the hold function is to be provided by the gearbox and the hydraulic system instead. The towing winch is to pay out towing line before the pull reaches 110% of the rated towline force F_W.

11A.3.7 Documentation is to be submitted as required by Table III 11A-1.

Table III 11A-1
Documentation Requirements for Escort (F_S, t, V)

Object	Documentation type	Additional description	Info
Vessel	Test procedure for quay and sea trial		for information
	Report from quay and sea trial		for information
Stability	Preliminary stability manual, Final stability manual, as appropriate	Including stability escort calculations as described in 11A.4.	for approval
Towing arrangement	Arrangement plan	Including layout of vessels and towline path with theta-beta angles.	for information
	Calculation report	Towing forces, including F_W, F_S and F_B as described in Fig. III 11A-1.	for information
Tow line	Specification	Minimum breaking strength / safe working load for towline and associated components, fixations and supporting structures.	for information

11A.4 Stability

11A.4.1 The general stability criteria in 11.8 are to be complied with, in addition to stability criteria given below.

11A.4.2 The area under the righting arm curve and heeling arm curve is to satisfy the following ratio:

$R_{ABS} \geq 1.25$

where
R_{ABS} = Ratio between righting and heeling areas between equilibrium and 20° heeling angle. Equilibrium is obtained when maximum steering force is applied from tug.

11A.4.3 Heeling arm is to be derived from the test. The heeling arm is to be kept constant from equilibrium to 20°, see Fig. III 11A-2.

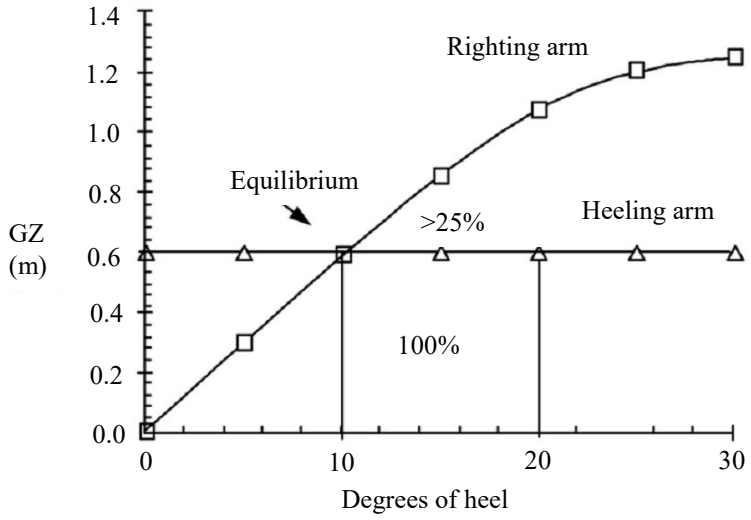

Fig. III 11A-2
Equilibrium to 20°

Note: The heeling arm is to be taken as escort heeling moment divided by the displacement. For preliminary calculations the heeling arm may be taken as the maximum value that ensures compliance with the criteria given in 11A.4.2 and 11A.4.4.

11A.4.4 The following requirement is to be satisfied:

$A + B \geq 1.4\ (B + C)$
A + B = Area under the GZ curve
B + C = Area under the heeling moment curve.
The areas are taken from 0° heel to the angle of down flooding or 40°, whichever is less. See Fig. III 11A-3.

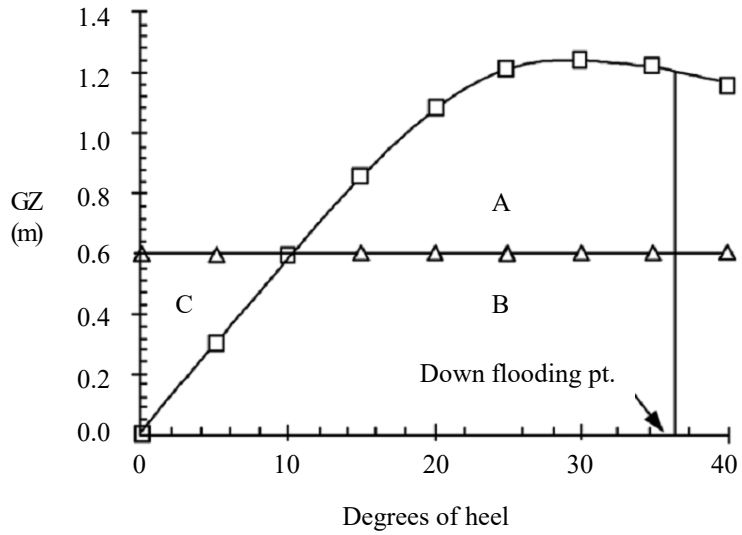

Fig. III 11A-3
Total Area Requirements

11A.5 Full Scale Testing

11A.5.1 The following tests are to be undertaken:

(a) Measurement of F_S

The escort tug will connect its towing line wire to the assisted vessel's stern and follow it with the wire slack, both ships travelling at the same speed. The tug will then position itself at an agreed angle of attack relative to the flow of water and the resulting towline tension F_W is to be recorded. These readings combined with the respective θ-β angles combinations are to be then used to establish F_S.

(b) Manoeuvre test:

The escort tug will shift its position from a steering position minimum 30° from one side of the assisted vessel (i.e. θ is 60°) to the mirror position in the opposite side and t will be the time required. The escort test speed is 8 knots and/or 10 knots. The surveyor will attend the test for the purpose of witnessing compliance with the agreed test program.

11A.5.2 Approved escort departure and escort arrival loading conditions from the stability booklet is to define the way the tug will be loaded for the trial.

11A.5.3 At least the following data is to be recorded continuously in real time mode during trials for later analysis:

(a) towline tension

(b) towline length

(c) towline angle θ

(d) oblique angle β

(e) heeling angle on tug

(f) speed of assisted vessel, relative to the sea

(g) time for the manoeuvre test

(h) weather condition and sea state.

11A.5.4 Sea trials exceeding critical heeling angle from approved stability calculations is not to be accepted.

Chapter 12
Fire-fighting Ships

12.1 General

12.1.1 This chapter applies to ships intended for fire-fighting operation classed in accordance with the provision in Chapter 1 of Part I.

12.1.2 Except otherwise provided in this chapter, the applicable requirements given in other Parts are to be applied.

12.1.3 Ships built in accordance with the Rules are to be assigned a service notation of **Fire-fighting Ship** affixed to classification symbols.

12.1.4 In addition to the plans required by 1.3 of Part II, the following plans and information are to be submitted:

(a) General arrangement showing the disposition of all fire-fighting equipment required by this chapter, together with details of major items such as pumps, monitors, water main, hydrants, hoses and nozzles, including their delivery capability.

(b) Piping diagram of the water fire-fighting system.

(c) Plan showing the arrangement and construction of fire divisions, fire doors and their fire resisting class certification.

(d) Plan showing the layout, capacity and coverage of the water spray system.

(e) Plan of the seating arrangements, local and remote control system for water monitor.

(f) Specification and location of the fireman's outfits provided.

(g) Particulars of the means of keeping the ship in position during fire-fighting operation.

12.1.5 The arrangements and equipment referred to in this chapter are to be examined and tested under working conditions on completion of the installation and subsequently annual survey.

12.2 Fire-fighting Characteristics

12.2.1 For ships having the service notation **Fire-fighting Ship 1, 2** or **3**, the minimum fire-fighting characteristics are to be in accordance with the requirements given in Table III 12-1.

12.2.2 Where the water monitor pumps are used for water spray protection system, Their capacity is to be sufficient to ensure the simultaneous operation of both systems at the required performance.

12.2.3 The length and height of throw are to be achieved with the required number of monitors operating simultaneously in the same direction.

12.2.4 Length of throw is to be measured horizontally from the monitor outlet to the mean impact area. Height of throw is to be measured from the sea level, the mean impact area being at a distance of at least 70 m from the nearest part of the ship.

Table III 12-1
Minimum Fire-Fighting Characteristics

Notation / Equipment	Fire-fighting Ship			
	1	2		3
Water monitor system				
Number of fire-fighting pumps	1	2		2
Total pump capacity, m^3/h	2400	7200		9600
Number of water monitors	2	3	4	4
Discharge rate per monitor, m^3/h	1200	2400	1800	2400
Length of throw of each monitor, m	120	150		150
Height of throw of each monitor, m	45	70		70
Number of hydrants at each side	4	8		8
Foam monitor system				
Number of foam monitors	-	-		2
Height of throw of each monitor, m	-	-		50
Discharge rate per monitor, m^3/h	-	-		300
Foam capacity, min	-	-		30
Concentrated rate	-	-		5%
Foam expansion ratio	-	-		<12
Others				
Number of fireman's outfits	4	8		8

12.3 Constructions

12.3.1 The structure of the ship is to be strengthened as necessary to withstand the forces imposed by the fire extinguishing systems when operating at their maximum capacity.

12.3.2 The seating of the monitors are to be of adequate strength for all modes of operation.

12.3.3 Sea suctions for fire-fighting pumps are not to be used for other purposes; they are to be arranged as low as practicable to avoid icing, debris clogging or the ingress of oil from the surface of the sea.

12.3.4 Sea water inlets are to be fitted with strainers having a free passage area of at least twice that of sea suction valve. Efficient means are to be provided such as low-pressure steam or compressed air connection for cleaning purposes.

12.3.5 Two searchlights are to be provided for illuminating the fire-fighting targets at night capable of providing 50 lux illumination within an area of not less than 11 m diameter at a range of 250 m in clear atmosphere. They are to be capable of being adjusted in horizontal and vertical direction.

12.4 Fire-fighting Systems

12.4.1 The pumps and their piping system which are intended for serving the monitors are not to be used for services other than fire-extinguishing and water spraying. They are to be provided with independent sea inlets.

12.4.2 Sea water suction valve, water delivery valve and pump are to be operated from the same position. Valves with a nominal diameter exceeding 450 mm are to be provided with a power actuation system in addition to manual operation device.

12.4.3 The piping system from the pumps to the water monitor is to be separate form piping system to the hydrants and fire hoses for portable fire-fighting equipment.

12.4.4 Where the water monitor pumps are also used for the water-spraying system, it is to be possible to segregate these two systems by means of a valve. Where the pumps are exclusively used for fixed water spray systems, the piping is to be independent of that supplying the monitors. The water spray systems are to be adequately protected against overpressure.

12.4.5 Monitors are to be of an approved type with robust construction capable of withstanding the reaction forces of the water jet and capable of throwing continuous water jets in full capacity without significant pulsation.

12.4.6 The monitors are to be so arranged that the required direction, range and height of trajectory can be achieved separately, with the required number of monitors operating simultaneously.

12.4.7 Monitors are to be capable of being activated and maneuvered by remote control from a protected position having adequate visibility of the monitors and the operation area of the water jets.

12.4.8 Local manual control is to be arranged for each monitor. It is to be possible to disconnect the local manual control from the remote control station and, disconnect the remote control system at each monitor to allow operation with local manual control.

12.4.9 The maximum design water velocity is normally not to exceed 4 m/s in the piping between pump and water monitor.

12.4.10 Ships having the service notation **Fire-fighting Ship 3**, are to be fitted with two foam monitors, each having a foam solution capacity not less than 300 m^3/h. The height of throw is to be at least 50 m above the sea level, when both monitors are in operation at the maximum foam production rate.

12.4.11 Foam concentrate is to be sufficient for at least 30 minutes of simultaneous operation of both monitors at maximum capacity with assumed concentrated rate of 5%. The foam expansion ratio is not to exceed 12.

12.4.12 Pumps of the water monitor system may be used for supplying water to the foam system. In such case, it may be necessary to reduce the pump water delivery pressure to ensure correct water pressure for maximum foam generation.

12.4.13 Each hydrant is to be provided with a hose and a nozzle. The hoses are to be of 38 to 70 mm in diameter and generally are to be 15 to 20 m in length. The nozzles are to be of dual-purpose type capable of producing a jet or a spray or simultaneously a compound of jet and spray.

12.5 Fire Protection

12.5.1 Ships which are intended to operate in close proximity to a large fire will require protection from the heat radiated from the fire. Such protection may be afforded by a system which provides a water spray over the surface of the ship, or by a combination of insulation and a water spray system.

12.5.2 The water spray system is to be a fixed system which is capable of delivering a spray of water over all the exposed external vertical surfaces of the hull in the lightest sea-going condition, including the superstructures and

deckhouses and over the monitor position. The water spray system will also be required to cover the areas of deck which form the crowns of machinery spaces and other spaces containing combustible material.

12.5.3 The system is to have a capacity of 10 liters/min per m^2 of the protected area of insinuated steel and 5 litters/min per m^2 of the protected area which is insulated internally to A-60 standard.

12.5.4 The system is to be divided into sections, so that it will be possible to close down sections covering surfaces which are not exposed to radiant heat.

12.5.5 The nozzles are to be arranged to give an even distribution of water spray over the protected area.

12.5.6 The pumping capacity is to be sufficient to supply simultaneously at the required pressure the sections which serve the maximum area which may be exposed to radiant heat from a fire. If the main fire pumps are used for this purpose, they are to be capable of operating this system and the monitors and hydrants simultaneously at the required pressures.

12.5.7 Deck scuppers and freeing ports are to be of sufficient area to ensure efficient drainage of water from decks and horizontal surfaces in all conditions when the water spray system is in operation.

12.5.8 In ships which are not provided with a water spray system, all windows and port lights are to be provided with efficient deadlights or external steel shutters, except in the wheelhouse.

12.6 Fireman's Outfits

12.6.1 The number of fireman's outfits is to be in accordance with Table III 12-1. They are to be stored in a safe position which is readily accessible from the open deck.

12.6.2 The composition of a fireman's outfit is to be as follows:

(a) Protective clothing of material to protect the skin from heat radiating from the fire and from burns and scalding by steam. The outer surface is to be water-resistant.

(b) Boots and gloves of rubber or other electrically non-conducting material.

(c) A rigid helmet providing effective protection against impact.

(d) An electric safety lamp (hand lantern) of an approved type with a minimum operating period of 3 hours.

(e) An axe having an insulated handle.

(f) A self-contained breathing apparatus, which is to be capable of functioning for a period of at least 30 minutes and having a capacity of at least 1200 liters of free air. Spare, fully charged air bottles are to be provided at the rate of at least one set per required apparatus.

(g) For each breathing apparatus, a fireproof lifeline of sufficient length and strength is to be provided capable of being attached by means of a snap-hook to the harness of the apparatus or to a separate belt, in order to prevent the breathing apparatus becoming detached when the life-line is operated.

12.6.3 A suitable air compressor for recharging the bottles used in the breathing apparatus of the fireman's outfits is to be provided. It is to be capable of recharging the bottles of the breathing apparatus required to be carried in a time not exceeding 30 minutes.

12.7 Inspections and Tests

12.7.1 Materials and machinery systems used for fire-fighting system including pumps, pipes, valves and other accessories are to be inspected and test in accordance with relevant requirement of the Rules.

12.7.2 The piping systems are to be submitted to a hydrostatic test after completion of manufacturing and before installation.

12.7.3 After assembly on board, the water fire-fighting system and the fixed foam fire-extinguishing system are to be check for leakage at normal operating pressure.

12.7.4 The water fire-fighting system and the fixed foam fire-extinguishing system are to undergo an operation test on board ship, to check characteristics and performance.

12.7.5 Maneuvering capability test of the ship with all water monitors in service is to be performed to demonstrate the control of main propulsion system and side thrusters to maintain the ship in position without requiring more than 80% of the propulsion power.

Chapter 13
Mobile Offshore Unit

13.1 General

This Chapter applies to units classed in accordance with the provisions in Chapter 1 of Part I and built for the purpose of ocean service.

Units complying with the requirements of this Chapter are to be assigned a notation of "**Mobile Offshore Unit**" and a notation of unit type,"**Self-Propelled Unit**", "**Non Self-Propelled Unit**" or "**Self-Elevating Unit**", as defined in 13.1.1.

Alternatives equivalent to the Rules may be accepted subject to the discretion of the Society.

13.1.1 Definitions

(a) General

For the purpose of this Chapter, the terms have the following meaning unless stated otherwise.

(i) Unit

A mobile offshore structure or vessel, whether designed for operation afloat or supported on sea bed.

(ii) Self-Propelled Unit

A unit designed with means of propulsion capable of propelling the unit during long distance ocean transits without external assistance.

(iii) Non-Self-Propelled Unit

A unit that is not a self-propelled unit. Units with machinery used exclusively for positioning, unassisted short field moves as allowed by the Flag Administration and/or Coastal State and to provide assistance during towing operations may be considered non-self-propelled units.

(b) Types of Unit

(i) Self-Elevating Unit

A unit with movable legs capable of raising its hull above the surface of the sea and lowering it back into the sea.

The hull has sufficient buoyancy to transport the unit to the desired location. Once on location, the hull is raised to a predetermined elevation above the sea surface on its legs, which are supported by the sea bed.

The legs of such units may be designed to penetrate the sea bed, may be fitted with enlarged sections or footings, or may be attached to a bottom mat.

(ii) Other Types of Unit

A unit does not fall into any of the above categories.

(c) Water Depth

The Water Depth is the vertical distance from the sea bed to the nominal water level plus the height of the astronomical and storm tides.

(d) Molded Base Line

The Molded Base Line is a horizontal line through the upper surface of the bottom shell, lower hull bottom shell or caisson bottom shell.

(e) Bulkhead Deck

The Bulkhead Deck in the case of self-elevating units is the highest deck to which watertight bulkheads extend and are made effective.

(f) Freeboard Deck

The Freeboard Deck in the case of self-elevating units is normally the uppermost continuous deck having permanent means of closing all openings.

(g) Lightweight

Lightweight is the displacement of the complete unit with all of its machinery, equipment and outfit, including permanent ballast, required spare parts and liquids in machinery and piping to their working levels but without liquids in storage or reserve supply tanks, items of consumable or variable loads, stores or crews and their effects.

(h) Total Elevated Load

The Total Elevated Load of a Self-Elevating Unit is the combination of:

(i) The lightweight as specified in 13.1.1(g), but excluding the weight of the legs and spud cans,

(ii) All shipboard and equipment and associated piping,

(iii) Liquid variables,

(iv) Solid variables, and

(v) Combined loads

(i) Mode of Operation

A Mode of Operation is a condition or manner in which a unit may operate or function while on location or in transit and includes the following.

(i) Normal Operating Condition

A Normal Operating Condition is a condition wherein a unit is on location to operate, and combined environmental and operational loading are within the appropriate design limits established for such operations. The unit may be either afloat or supported by the sea bed.

(ii) Severe Storm Condition

A Severe Storm Condition is a condition wherein a unit may be subjected to the most severe environmental loadings for which it was designed. During the severe storm condition, it may be necessary to discontinue operations due to the severity of the environmental loadings. The unit may be either afloat or supported by the sea bed.

(iii) Transit Conditions

Transit Conditions are all unit movements from one geographical location to another.

(j) Weathertight

Weathertight means that in any sea condition associated with the mode of operation, water will not penetrate into the unit.

(k) Watertight

Watertight means the capability of preventing the passage of water through the structure in any direction under a head of water for which the surrounding structure is designed.

(l) System of Measurement

The Rules are written in system of SI units.

(m) Service Temperature

The service temperature of the unit refers to the minimum temperature of the steel in all modes of operation and is to be taken as the lowest mean daily average air temperature based on available meteorological data for anticipated areas of operation.

13.1.2 Environmental Loadings

(a) General

A unit's modes of operation should be investigated using anticipated loads, including gravity and functional loads together with relevant environmental loads due to the effects of wind, waves, currents, and where deemed necessary by the Owner or designer, the effects of earthquake, sea bed supporting capabilities, ambient temperature, fouling, ice, etc. Where applicable, the loads indicated herein are to be adhered to for all types of mobile offshore unit. The Owner is to specify the environmental conditions for which the plans for the unit are to be approved. These design environmental conditions are to be recorded in the Operating Manual.

(b) Wind Loadings

(i) General

The minimum wind velocity for unrestricted offshore service for all normal operating and transit conditions is not to be less than 36 m/s (70 kn). All units in unrestricted offshore service are to have the capability to withstand a severe storm condition wherein a wind velocity of not less than 51.5 m/s (100 kn) is assumed. In order to comply with a severe storm condition, all units are to show compliance with this requirement at all times or have the capability to change their mode of operation. The steps to be taken to comply with the 51.5 m/s (100 kn) criteria from the 36 m/s (70 kn) criteria are the responsibility of the Owner. Units which, due to intended limited service, are not designed to meet the above criteria may be considered for restricted service classification. For any restricted classification, the minimum wind velocity is to be taken at not less than 25.7 m/s (50 kn).

(ii) Wind Pressure

In the calculation of wind pressure, P, the following equation is to be used and the vertical height is to be subdivided approximately in accordance with the values listed in Table III 13-2

$$P = f V_k^2 C_h C_s \quad N/m^2$$

where:

f = 0.611

V_k = Wind velocity in m/s

C_h = Height coefficient from Table III 13-2

C_s = Shape coefficient from Table III 13-1

Table III 13-1
Values of C_s

Spherical	0.4
Cylindrical shapes (all sizes)	0.5
Hull (surface-type)	1.0
Deck house	1.0
Isolated Structural shapes (cranes, angles, channels, beams, etc.)	1.5
Wires	1.2
Under deck areas (smooth surfaces)	1.0
Under deck areas (exposed beams and girders)	1.3
Small parts	1.4
Rig derrick (each face)	1.25
Note: Shapes or combinations of shapes which do not readily fall into the specified categories will be subject to special consideration.	

Table III 13-2
Values of C_h

Height (m)	C_h
0.0–15.3	1.00
15.3–30.5	1.10
30.5–46.0	1.20
46.0–61.0	1.30
61.0–76.0	1.37
76.0–91.5	1.43
91.5–106.5	1.48
106.5–122.0	1.52
122.0–137.0	1.56
137.0–152.5	1.60
152.5–167.5	1.63
167.5–183.0	1.67
183.0–198.0	1.70
198.0–213.5	1.72
213.5–228.5	1.75
228.5–244.0	1.77
244.0–259.0	1.79
259.0 and above	1.80
Note: The height, h, in m, is the vertical distance from the design water surface to the center of area, A, defined in 13.1.2(iii)	

(iii) Wind Force

The wind force, F, is to be calculated in accordance with the following equation for each vertical area and the resultant force and vertical point of application is to be determined.

$$F = P A$$

where:

F = Force, in N

P = Pressure, in N/m^2

A = Projected area, in m^2, of all exposed surfaces in either the upright or heeled condition

In calculating the wind forces, the following procedures are recommended:

(1) In the case of units with columns, the projected areas of all columns are to be included (i.e., no shielding allowance is to be taken).

(2) Areas exposed due to heel, such as underdecks, etc., are to be included using the appropriate shape coefficients.

(3) The block projected area of a clustering of deck houses may be used in lieu of calculating each individual area. The shape coefficient may be assumed to be 1.1.

(4) Isolated houses, structural shapes, cranes, etc., are to be calculated individually using the appropriate shape coefficient from Table III 13-1.

(5) Open truss work commonly used for derrick towers, booms and certain types of masts may be approximated by taking 30% of the projected block areas of both the front and back sides, i.e., 60% of the projected block area of one side for double sided truss work. The shape coefficient is to be taken in accordance with Table III 13-1.

(c) Wave Loadings

(i) General

Wave criteria specified by the Owner may be described by means of wave energy spectra or by deterministic waves having shape, size and period appropriate to the depth of water in which the unit is to operate. Waves are to be considered as coming from any direction relative to the unit. Consideration is to be given to waves of less than maximum height where due to their period, the effects on various structural elements may be greater.

(ii) Determination of Wave Loads

The determination of wave loads for use in structural design is to be based on acceptable calculations, model tests or full scale measurements. For structures comprised of slender members which do not significantly alter the incident wave field, semi-empirical formulations such as Morison's equation may be used. For calculations of wave loads on structural configurations which significantly alter the incident wave field, diffraction methods are to be used which account for both the incident wave force (i.e., Froude-Krylov force) and the forces resulting from wave diffraction and radiation.

In general, Morison's equation may be used for structures comprised of slender members the diameters (or equivalent diameters giving the same cross-sectional areas parallel to the flow) of which are less than 20% of the wave lengths being considered and are small in relation to the distances between structural members subject to wave loading (e.g., self-elevating units in the elevated condition.).

For each combination of wave height, wave period and water depth being considered, a range of wave crest positions relative to the structure is to be investigated to ensure an accurate determination of the maximum wave force on the structure.

(iii) Morison's Equation

The hydrodynamic force acting normal to the axis of a cylindrical member, as given by Morison's equation, is expressed as the sum of the force vectors indicated in the following equation:

$$F_w = F_D + F_I$$

where:

F_w = Hydrodynamic force vector per unit length along the member, acting normal to the axis of the member.

F_D = Drag force vector per unit length

F_I = Inertia force vector per unit length

The drag force vector per unit length for a stationary, rigid member is given by:

$$FD = (C/2)\, D\, C_D\, u_n\, |u_n| \quad \text{kN/m}$$

where:

C = 1.025

D = Projected width, in m, of the member in the direction of the cross-flow component of velocity (in the case of a circular cylinder, D denotes the diameter)

C_D = Drag coefficient (dimensionless)

u_n = Component of the velocity vector, normal to the axis of the member, in m/s

$|u_n|$ = Absolute value of u_n, in m/s

The inertia force vector per unit length for a stationary, rigid member is given by:

$$F_I = C\,(\pi D^2/4)\,C_M\,a_n \quad \text{kN/m}$$

where

C_M = Inertia coefficient based on the displaced mass of fluid per unit length (dimensionless)

a_n = Component of the fluid acceleration vector normal to the axis of the member, in m/s^2

For structures which exhibit substantial rigid body oscillations due to wave action, the modified form of Morison's equation given below may be used to determine the hydrodynamic force.

$$F_w = F_D + F_I$$
$$= (C/2)\,D\,C_D\,(u_n - u_n')\,|u_n - u_n'| + C\,(\pi D^2/4)a_n + C\,(\pi D^2/4)\,C_m\,(a_n - a_n')$$

where

u_n' = Component of the velocity vector of the structural member normal to its axis, in m/s

C_m = Added mass coefficient (i.e., $C_m = C_M - 1$)

a_n' = Component of the acceleration vector of the structural member normal to its axis, in m/s^2

For structural shapes other than circular cylinders, the term $\pi D^2/4$ in the above equations is to be replaced by the actual cross-sectional area of the shape.

Values of u_n and a_n for use in Morison's equation are to be determined using wave theories appropriate to the wave heights, wave periods and water depths being considered. Drag and inertia coefficients vary considerably with section shape. Reynold's number, Keulegan-Carpenter number and surface roughness are to be based on reliable data obtained from literature, model or full scale tests. For circular cylindrical members at Reynold's numbers greater than 1×10^6, C_D and C_M may be taken at 0.62 and 1.8, respectively, provided that marine fouling is prevented or periodically removed.

(d) Current Loading

(i) Current Associated with Waves

When determining loads due to the simultaneous occurrence of waves and current using Morison's equation, the current velocity is to be added vectorially to the wave particle velocity before the total force is computed. When diffraction methods are used for calculating wave force, the drag force due to current should be calculated in accordance with 13.1.2(d)(ii) and added vectorially to the calculated wave force.

The current velocity is to include components due to tidal current, storm surge current and wind driven current. In lieu of defensible alternative methods, the vertical distribution of current velocity in still water and its modification in the presence of waves, as shown in Fig. III 13-1, are recommended,

where

$V_c = V_t + V_s + V_w\,[(h - z)/h]$, for $z \le h$

$V_c = V_t + V_s$ for $z > h$

where

V_c = Current velocity, m/s

V_t = Component of tidal current velocity in the direction of the wind, m/s

V_s = Component of storm surge current, m/s

V_w = Wind driven current velocity, m/s

h = Reference depth for wind driven current, m. (in the absence of other data, h may be taken as 5 m .

z = Distance below still water level under consideration, m

d = Still water depth, m

In the presence of waves, the current velocity profile is to be modified, as shown in Fig. III 13-1, such that the current velocity at the instantaneous free surface is a constant.

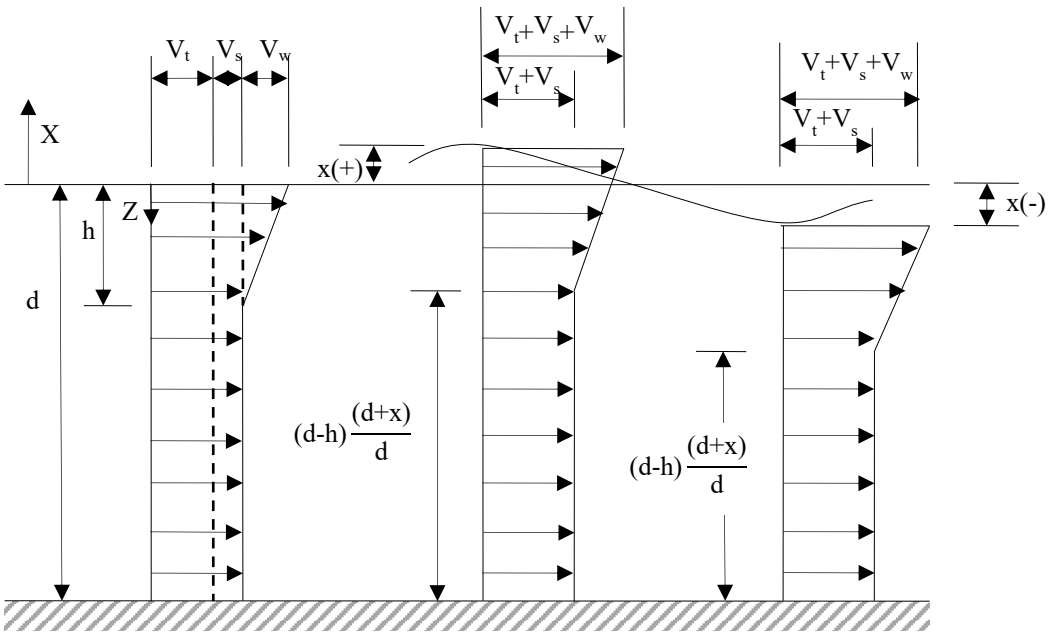

Fig. III 13-1
Current Velocity Profile

(ii) Drag Force

When calculating the drag force on submerged parts of the structure due to current alone, the following equation may be used.

$f_D = C/2\ D\ C_D\ u_c\ |u_c|$

where

f_D = Current drag force vector per unit length along the member, acting normal to the axis of the member in kN/m

u_c = Component of the current velocity vector, V_c, normal to the axis of the member

C, D and C_D are as defined in 13.1.2 (c)(iii)

All of the above values are to be taken in a consistent system of units, C_D being dimensionless. Drag coefficients in steady flow vary considerably with section shape, Reynold's number and surface roughness and are to be based on reliable data obtained from literature, model or full scale tests.

(e) Loadings due to Vortex Shedding

Consideration is to be given to the possibility of flutter of structural members due to vortex shedding.

(f) Gravity and Functional Loads

(i) General

The gravity loads are steel, equipment and outfitting weights, liquid and solid variables, and live loads and should be taken into account in the design of the structural strength and stability. The load effects due to operations should also be taken into account.

(ii) Combinations of Gravity and Functional Loads for Design

For all modes of operation, the combinations of gravity and function loads are to be specified by the Owners or Designers as per the operations designed. However, maximums (or minimums) of the combinations that produce the most unfavorable load effects in the strength or stability of the unit should be taken for design.

(iii) Deck Loadings

A loading plan is to be prepared for each design. This plan is to show the maximum uniform and concentrated loadings to be considered for all areas for each mode of operation. In the preparation of this plan, the following loadings are to be considered as minimums.

Crew spaces (walkways, general traffic areas, etc.)	:	4510 N/m^2	or 0.64 m	head
Work areas	:	9020 N/m^2	or 1.28 m	head
Storage areas	:	13000 N/m^2	or 1.84 m	head

13.2 Hull Structures and Arrangements

13.2.1 Structural Analysis

(a) Structural Analysis

(i) Analysis of Primary Structure

The primary structure of the unit is to be analyzed using the loading conditions stipulated below and the resultant stresses are to be determined. To determine critical cases, conditions representative of all modes of operation are to be considered. Calculations for critical conditions are to be submitted for review. The analysis is to be performed using recognized calculation methods and is to be fully documented and referenced.

For each loading condition considered, the following stresses are to be determined, and are not to exceed the allowable stresses given in 13.2.1(b).

(1) Stresses due to static loadings only, where the static loads include operational gravity loadings and weight of the unit, with the unit afloat or resting on the sea bed in calm water.

(2) Stresses due to combined loadings, where the applicable static loads in 13.2.1(a)(i)(1) are combined with relevant environmental loadings, including acceleration and heeling forces.

(ii) Consideration of Local Stresses

Local stresses are to be combined with primary stresses, where applicable, to determine total stress levels.

(iii) Combination of Stress Components

The scantlings are to be determined on the basis of a method included in a recognized standard which combines the individual stress components acting on the various structural elements of the unit.

(iv) Consideration of Buckling

The possibility of buckling of structural elements is to be considered.

(v) Determination of Bending Stresses

(1) Effective Flange Area

The required section modulus of members such as girders, webs, etc., supporting frames and stiffeners is to be obtained on an effective width of plating basis in accordance with the following criteria. The section is to include the structural member in association with an effective width of plating not exceeding one-half the sum of spacing on each side of the member or 33% of the unsupported span, whichever is less. For girders and webs along hatch openings, an effective

breadth of plating not exceeding one-half the spacing or 16.5% of the unsupported span *l*, whichever is less, is to be used. The required section modulus of frames and stiffeners is assumed to be provided by the stiffener and a maximum of one frame space of the plating to which it is attached.

(2) Eccentric Axial Loading

Where appropriate, elastic deflections are to be taken into account when determining the effects of eccentricity of axial loading, and the resulting bending moments are to be superimposed on the bending moments computed for other types of loadings.

(vi) Determination of Shear Stresses

When computing shear stresses in structural members, only the effective shear area of the web of the member is to be considered as being effective. In this regard, the total depth of the member may be used as the web depth.

(vii) Stress Concentration

The effect of notches, stress raisers and local stress concentrations is to be taken into account when considering load carrying elements. When stress concentrations are considered to be of high intensity in certain elements, the acceptable stress levels will be subject to special consideration.

(viii) Analysis and Details of Structural Connections

Unless connections of structural members are specifically detailed as hinged joints, proper consideration is to be given in the structural analysis to the degree of restraint at such connections. Structural connections are to be detailed in such a manner as to ensure full transmission of stresses between members joined, and to minimize stress concentrations. The following details are to be considered, as may be appropriate.

(1) Shear web plates, continuous through the joint, to transmit tension and compression loads between members by means of shear in the web plate

(2) Flaring or transitioning of the joint, to lower stress levels or to minimize concentrations of stress or both

(3) Thicker joint material, high strength steel, or both, consistent with good weldability, to reduce the effect of high stress levels

(4) Brackets or other supplemental transition members, with scallops and proper end attachment details to minimize high stress concentrations

Critical connections that depend upon the transmission of tensile stresses through the thickness of the plating of one of the members may result in lamellar tearing and are to be avoided wherever possible. Where unavoidable, plate material with suitable through-thickness (Z direction) properties may be required with appropriate inspection procedures.

(ix) Fatigue Analysis

The possibility of fatigue damage due to cyclic loading is to be considered in the design of the major structure of self-elevating units.

The type and extent of the fatigue analysis will be dependent on the intended mode and areas of operations to be considered in the unit's design. An appropriate loading spectrum, in accordance with accepted theories, is to be used in the fatigue analysis.

The calculated fatigue life of the structure should be at least the design life of the unit, but not less than 20 years.

(x) Plastic Analysis

Plastic analysis methods will be subject to special consideration.

(b) Allowable Stresses

(i) General

The scantlings of effective structural elements of the primary frame of the unit, analyzed in accordance with 13.2.1(a), are to be determined on the basis of the allowable stresses specified herein for self-elevating units.

(ii) Individual Stresses

Individual stress components and, as applicable, direct combinations of such stresses are not to exceed the allowable stress F, as obtained from the following equation.

$F = F_y / F.S.$

where

F_y = Specified minimum yield point or yield strength.

F.S. = Factor of safety

For static loadings, as defined in 13.2.1 (a)(i)(1)

= 1.67 for axial or bending stress

= 2.50 for shear stress

For combined loadings, as defined in 13.2.1 (a)(i)(2)

= 1.25 for axial or bending stress

= 1.88 for shear stress

(iii) Buckling Considerations

Where buckling of a structural element due to compressive or shear stresses, or both, is a consideration, the compressive or shear stress is not to exceed the corresponding allowable stress, F, as obtained from the following equation.

$F = F_{cr} / F.S.$

where

F_{cr} = Critical compressive or shear buckling stress of the structural element, appropriate to its dimensional configuration, boundary conditions, loading pattern, material, etc.

F.S. = Factor of safety

= 1.67 for static loadings, as defined in 13.2.1 (a)(i)(1)

= 1.25 for combined loadings, as defined in 13.2.1 (a)(i)(2)

(iv) Members Subjected to Combined Axial Load and Bending

(1) When structural members are subjected to axial compression in combination with compression due to bending, the computed stresses are to comply with the following requirements:

when $f_a / F_a \leq 0.15$ $\quad (f_a / F_a) + (f_b / F_b) \leq 1.0$

when $f_a / F_a > 0.15$ $\quad (f_a / F_a) + C_m f_b / ((1 - f_a / F_e') F_b) \leq 1.0$

and in addition, at ends of members:

$1.67 (f_a / F_y) + (f_b / F_b) \leq 1.0$ for static loadings, as defined in 13.2.1 (a)(i)(1)

$1.25 (f_a / F_y) + (f_b / F_b) \leq 1.0$ for combined loadings, as defined in 13.2.1 (a)(i)(2)

(2) When structural members are subjected to axial tension in combination with tension due to bending, the computed stresses are to comply with the following requirements:

$f_a + f_b \leq F_y / 1.67$ for static loadings, as defined in 13.2.1 (a)(i)(1)

$f_a + f_b \leq F_y / 1.25$ for combined loadings, as defined in 13.2.1 (a)(i)(2)

However, the computed bending compressive stress, f_b, taken alone shall not exceed F_b.

where

f_a = Computed axial compressive or tensile stress

f_b = Computed compressive or tensile stress due to bending

F_a = Allowable axial compressive stress, which is to be the least of the following:

- Yield stress divided by factor of safety for axial stress specified in 13.2.1(b)(ii)
- Overall buckling stress divided by factor of safety specified in 13.2.1(b)(v)(1)

- Local buckling stress divided by factor of safety for axial stress specified in 13.2.1(b)(v)(2)

F_b = Allowable axial compressive stress due to bending, determined by dividing the Yield stress or local buckling stress, whichever is less, by the factor of safety Specified in 13.2.1(b)(ii)

F_e' = $5.15\ E / (K\ l / r)^2$

F_e' = Euler buckling stress, may be increased 1/3 for combined loadings, as defined in 13.2.1(a)(i)(2)

E = Modulus of Elasticity

l = Unsupported length of column

K = Effective length factor which accounts for support conditions at ends of length l. For cases where lateral deflection of end supports may exist, K is not to be considered less than 1.0.

r = Radius of gyration

C_m = Is a coefficient as follows

- For compression members in frames subject to joint translation (sideways), $C_m = 0.85$
- For restrained compression members in frames braced against joint translation and not subject to transverse loading between their supports, in the plane of bending,
  $C_m = 0.6 - 0.4\ (M_1 / M_2)$
  but not less than 0.4, where M_1/M_2 is the ratio of the smaller to larger moments at the ends of that portion of the member unbraced in the plane of bending under consideration. M_1/M_2 is positive when the member is bent in reverse curvature and negative when it is bent in single curvature.
- For compressive members in frames braced against joint translation in the plane of loading and subject to transverse loading between their supports, the value of C_m may be determined by rational analysis. However, in lieu of such analysis, the following values may be used. for members whose ends are restrained,
  $C_m = 0.85$;
  for members whose ends are unrestrained,
  $C_m = 1$.

(v) Column Buckling Stresses

(1) Overall Buckling

For compression members which are subject to overall column buckling, the critical buckling stress is to be obtained from the following equations.

$F_{cr} = F_y - (F_y^2/4\pi^2 E)(K\ l / r)^2$ when $K\ l / r < \sqrt{(2\pi^2 E)/F_y}$

$F_{cr} = \pi^2 E / (K\ l / r)^2$ when $K\ l / r \geq \sqrt{(2\pi^2 E)/F_y}$

where

F_{cr} = Critical overall buckling stress

F_y = As defined in 13.2.1(b)(ii)

E, K, l, r are defined in 13.2.1(b)(iv)(2).

The factor of safety for overall column buckling is to be as follows.

For static loading, as defined in 13.2.1(a)(i)(1)

$$F.S. = 1.67\left[1 + 0.15\frac{\frac{Kl}{r}}{\sqrt{(2\pi^2 E)/F_y}}\right] \quad \text{when } K\ l / r < \sqrt{(2\pi^2 E)/F_y}$$

F.S. = 1.92 when $K\,l\,/\,r \geq \sqrt{(2\pi^2 E)/F_y}$

For combined loadings, as defined in 13.2.1(a)(i)(2)

$$F.S. = 1.25\left[1 + 0.15\frac{\frac{Kl}{r}}{\sqrt{(2\pi^2 E)/F_y}}\right] \quad \text{when } K\,l\,/\,r < \sqrt{(2\pi^2 E)/F_y}$$

$$F.S. = 1.44 \quad \text{when } K\,l\,/\,r \geq \sqrt{(2\pi^2 E)/F_y}$$

(2) Local Buckling

Members which are subjected to axial compression or compression due to bending are to be investigated for local buckling, as appropriate, in addition to overall buckling, as specified in 13.2.1(b)(v)(1).

In the case of unstiffened or ring-stiffened cylindrical shells, local buckling is to be investigated if the proportions of the shell conform to the following relationship.

$$D / t > E / 9\,F_y$$

where

D = Mean diameter of cylindrical shell

t = Thickness of cylindrical shell (expressed in the same units as D)

E and F_y are defined in 13.2.1(b)(v)(1).

(vi) Equivalent Stress Criteria for Plated Structures

For plated structures, members may be designed according to the von Mises equivalent stress criterion, where the equivalent stress σ_{eqv}, defined as follows, is not to exceed F_y/F.S.

$$\sigma_{eqv} = \sqrt{\sigma_x^2 + \sigma_y^2 - \sigma_x\sigma_y + 3\tau_{xy}^2}$$

where

σ_x = Calculated in-plane stress in the x direction

σ_y = Calculated in-plane stress in the y direction

τ_{xy} = Calculated in-plane shear stress

F_y = As defined in 13.2.1(b)(ii)

F.S. = 1.43 for static loading, as defined in 13.2.1(a)(i)(1)

= 1.11 for combined loading, as defined in 13.2.1(a)(i)(2)

Note: The Factor of Safety will be specially considered when the stress components account for surface stresses due to lateral pressures.

The buckling strength of plated structures is to be designed according to the recognized standard acceptable to the Society.

13.2.2 Watertight Bulkheads and Watertight Flats

(a) General

Watertight bulkheads and flats are to be in accordance with this section. In all cases, the plans submitted are to clearly indicate the location and extent of the watertight bulkheads and watertight flats.

For self-elevating units, the watertight bulkheads and watertight flats are to comply with the applicable requirements of Part II of the Rules.

(b) Plating

The plating thickness of watertight bulkheads and watertight flats is not to be less than that obtained from the following equation.

$$t = \frac{sk\sqrt{qh}}{290} + 1.5 \quad \text{mm}$$

but not less than 6 mm or s / 200 + 2.5 mm, whichever is greater.

where

t	=	Thickness, in mm	
s	=	Spacing of stiffeners, in mm	
k	=	$(3.075 \sqrt{\alpha} - 2.077) / (\alpha + 0.272)$	for $1 \le \alpha \le 2$
	=	1.0	for $\alpha > 2$
α	=	Aspect ratio of the panel (longer edge/shorter edge)	
q	=	235 / Y	
Y	=	Specified minimum yield point or yield strength, in N/mm^2, or 72% of the specified minimum tensile strength, whichever is the lesser	
h	=	Distance, in m, from the lower edge of the plating to the bulkhead deck at center.	

(c) Stiffeners and Beams

The section modulus, SM, of each bulkhead stiffener or beam on a watertight flat, in association with the plating to which it is attached, is not to be less than that obtained from the following equation:

$$SM = f\,c\,h\,s\,l^2 \quad \text{cm}^3$$

where

f	=	7.8
c	=	For units with a length of 61 m and greater
	=	0.56 for stiffeners with ends attached 0.60 for stiffeners with no end attachment
h	=	Distance, in m, from the middle of *l* to the bulkhead deck at center; where the distance is less than 6.1 m, h is to be taken as 0.8 times the distance in m plus 1.22.
s	=	Spacing of stiffeners, in m
l	=	Length of stiffeners, in m; where brackets are fitted with a slope of approximately 45 degrees and thickness given in Table III 13-2, the length of *l* may be measured to a point on the bracket equal to 25% of the length of the bracket.

For units under 45 m in length, the above values for c may be 0.46 and 0.58, respectively, and h may be taken as the distance in m from the middle of *l* to the bulkhead deck at center. For units between 45 and 61 m in length, interpolated values for c may be used.

Table III 13-3
Thickness and Flange Width of Brackets and Knees

Depth of Longer Arm (mm)	Thickness		Flange Width (mm)
	Plain (mm)	Flanged (mm)	
150	6.5		
175	7.0		
200	7.0	6.5	30
225	7.5	6.5	30
250	8.0	6.5	30
275	8.0	7.0	35
300	8.5	7.0	35
325	9.0	7.0	40
350	9.0	7.5	40
375	9.5	7.5	45
400	10.0	7.5	45
425	10.0	8.0	45
450	10.5	8.0	50
475	11.0	8.0	50
500	11.0	8.5	55
525	11.5	8.5	55
550	12.0	8.5	55
600	12.5	9.0	60
650	13.0	9.5	65
700	14.0	9.5	70
750	14.5	10.0	75
800		10.5	80
850		10.5	85
900		11.0	90
950		11.5	90
1000		11.5	95
1050		12.0	100
1100		12.5	105
1150		12.5	110
1200		13.0	110
Note: The thickness of brackets is to be increased in cases where the depth at throat is less than two-thirds of the knee.			

(d) Corrugated Bulkheads

(i) Plating

The plating thickness of corrugated bulkheads is to be as required by 13.2.2(b), with the following modification. The spacing to be used is the greater of the dimensions a or c as indicated in Fig. III 13-2. The angle ϕ is to be 45 degrees or greater.

(ii) Stiffeners

The section modulus of a corrugated bulkhead, as a stiffener, is to be as required by 13.2.2(c) using the coefficient c = 0.56. The developed section modulus, SM, may be obtained from the following equation, where a, t and d are as indicated in Fig. III 13-2, in cm.

$$SM = t\,d^2 / 6 + a\,d\,t / 2$$

The above equation is only valid for identical corrugations at both sides of the bulkhead. For other arrangements, the developed section modulus will be specially considered. The spacing of stiffeners in connection with the above equation is to be taken as a + b as indicated in Fig. III 13-2.

(iii) End Connections

The structural arrangements and size of welding at the ends of corrugations are to be designed to develop the required strength of corrugated stiffeners. Joints within 10% of the depth of corrugation from the outer surface of corrugation, d_1, are to have double continuous welds with fillet weld leg size w not less than 0.7 times the thickness of bulkhead plating or penetration welds of equal strength. See Fig. III 13-3.

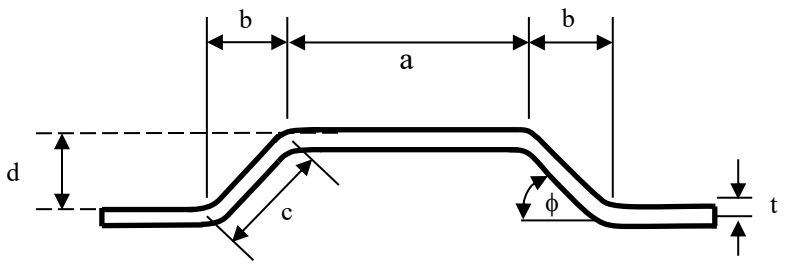

Fig. III 13-2
Corrugated Bulkhead

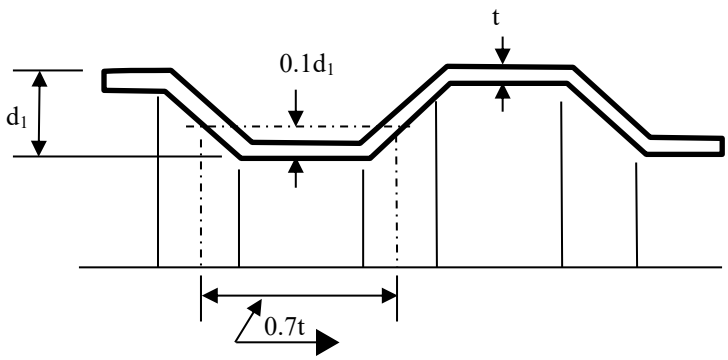

Fig. III 13-3
Corrugated Bulkhead End Connections

(e) Girders and Webs

(i) Strength Requirements

Girders and webs which support framing members on watertight bulkheads and flats are to be in accordance with the requirements given in this paragraph. In addition, the girders and webs are to meet the requirements of 13.2.6(b), where applicable. The section modulus, SM, of each girder or web is not to be less than that obtained from the following equation.

$$SM = f\,h\,s\,l^2 \quad cm^3$$

where

f = 4.7

h = Distances, in m, from the middle of the area supported to the bulkhead deck at center, where that distance is less than 6.1 m, the value of h is to be 0.8 times the distance in meters plus 1.22. (See 13.2.2(a))

s = Sum of half lengths, in m (on each side of girder or web), of the stiffeners or beams supported

l = Length, in m, between supports, where brackets are fitted at shell, deck or bulkhead supports, and the brackets are in accordance with Table III 13-3 and have a slope of approximately 45 degrees, the length *l* may be measured to a point on the bracket located at the distance from the toe equal to 25% of the length of the bracket.

(ii) Proportions

Girders and webs are to have a depth not less than *l* /12. The thickness is not to be less than one percent of depth plus 3 mm, but need not exceed 11 mm. In general, the depth of girders or webs is not to be less than twice the depth of cutouts.

(iii) Tripping Brackets

Girders and webs are to be supported by tripping brackets at intervals of about 3 m and near the change of the section. Where the width of the unsupported face plate exceeds 200 mm, the tripping brackets are to support the face plate.

(f) Openings

Where stiffeners are cut in way of watertight doors, the openings are to be framed and bracketed to maintain the full strength of the bulkheads without taking the strength of the doorframes into consideration.

13.2.3 Tank Bulkheads and Tank Flats

(a) General

The arrangement of all tanks, together with their intended service and the height of the air and overflow pipes, are to be clearly indicated on the plans submitted for approval. Tank boundary bulkheads and flats are to have scantlings in accordance with the requirements of this section, where they exceed the requirements of 13.2.2 for watertight bulkheads and flats. However, tight divisional bulkheads and flats between tanks, which will be subjected to equal pressure from both sides at all times, may have scantlings based on 13.2.2. In such cases, the tanks are to be provided with suitable means to ensure that the divisions are subjected to equal pressure from both sides at all times.

When the specific gravity of the liquid contents of a tank is greater than 1.05, the head, h, specified below, is to be increased by a factor equal to the ratio of the specific gravity to 1.0.

(b) Plating

Plating is to be of the thickness derived from the following equation:

$$t = \frac{sk\sqrt{qh}}{254} + 2.5 \quad \text{mm}$$

but not less than 6.5 mm or s / 150 + 2.5 mm which ever is greater.

where

t = Thickness, in mm

s = Stiffener spacing, in mm

k = $(3.075\sqrt{\alpha} - 2.077) / (\alpha + 0.272)$ for $1 \le \alpha \le 2$

= 1.0 for $\alpha > 2$

α = Aspect ratio of the panel (longer edge/shorter edge)

q = 235 / Y

Y = Specified minimum yield point or yield strength, in N/mm^2, or 72% of the specified minimum tensile strength, whichever is the lesser

h = Greatest of the following distances, in m, from the lower edge of the plate to:

(i) a point located two-thirds of the distance from the top of the tank to the top of the overflow;

(ii) a point located 0.91 m above the top of the tank;

(iii) a point representing the load line;

(iv) a point located at two-thirds of the distance to the freeboard deck.

(c) Stiffeners and Beams

The section modulus, SM, of each bulkhead stiffener or beam on a flat, in association with the plating to which it is attached, is not to be less than that obtained from the following equation:

$$SM = f\,c\,h\,s\,l^2 \quad cm^3$$

where

f = 7.8

c = 0.9 for stiffeners having clip attachments to decks or flats at to the ends or having such attachments at one end with the other end supported by girders

= 1.00 for stiffeners supported at both ends by girders

h = Greatest of the distances, in m, from the middle of l to the same points to which h for plating is measured (see 13.2.3(b))

s = Spacing of stiffeners, in m

l = Length, in m between supports; where brackets are fitted at shell, deck or bulkhead supports, and the brackets are in accordance with Table III 13-2 and have a slope of approximately 45 degrees, the length l may be measured to a point on the bracket located at a distance from the toe equal to 25% of the length of the bracket.

(d) Corrugated Bulkheads

Where corrugated bulkheads are used as deep-tank boundaries, the scantlings may be developed from 13.2.2(d). The plating thickness t and values of h are to be as required by 13.2.3(b) and 13.2.3(c), respectively, and c = 0.90.

(e) Girders and Webs

(i) Strength Requirements

Girders and webs which support framing members on tank bulkheads and flats are to be in accordance with the requirements given in this paragraph. In addition, the girders and webs are to meet the requirements of 13.2.6(b), where applicable. The section modulus, SM, of each girder or web is not to be less than that obtained from the following equation:

$$SM = f\,c\,h\,s\,l^2 \quad cm^3$$

where

f = 4.74

c = 1.5

h = Greatest of the distances, in m, from the middle of s in the case of girders or from the middle of l in the case of webs, to the same points to which h for plating is measured (see 13.2.3(b))

s = Sum of half lengths, in m (on each side of girder or web) of the stiffeners or beams supported

l = Length, in m, between supports; where brackets are fitted at shell, deck or bulkhead supports, and the brackets are in accordance with Table III 13-2 and have a slope of approximately 45

degrees, the length may be measured to a point on the bracket located at a distance from the toe equal to 25% of the length of the bracket

Where efficient struts are fitted, connecting girders or webs on each side of the tanks, the spacing of the struts is not more than four times the depth of the girder or web, the section modulus, SM, for each girder or web may be one-half that obtained from the above.

(ii) Proportions

Girders and webs are to have a depth not less than 0.125 *l* where no struts or ties are fitted, and 0.0833 *l* where struts are fitted. The thickness is not to be less than 1 percent of depth plus 3 mm, but need not exceed 11 mm. In general, the depth is not to be less than 2.5 times the depth of cutouts.

(iii) Tripping Brackets

Girders and webs are to be supported by tripping brackets at intervals of about 3 m near the change of the section. Where the width of the unsupported face plate exceeds 200 mm, tripping brackets are to support the face plate.

(f) Drainage and Air Escape

Limber and air holes are to be cut in all parts of the structure as required to ensure the free flow to the section pipes and the escape of air to the vents. Efficient arrangements are to be made for venting the tops of tanks.

13.2.4 Appurtenant Structure

(a) General

Structures which do not contribute directly to the overall strength of the unit, i.e., their loss or damage would not impair the structural integrity of the unit, are considered appurtenant structures.
Appurtenant structures, which are necessary components of safety systems covered by the Rules, or designed to support heavy loads, are to be adequate for the nature and magnitude of applied loads in all modes of operation. Raw Water (seawater intake) structure, flare boom support structure, lifeboat platform for life saving, crane pedestal and pipe racks are considered in this category. Unless noted otherwise, allowable stresses specified in 13.2.1(b) are to be used as the stress limits, except for those structural parts whose primary function is to absorb energy during deformation, in which case, sufficient ductility is to be demonstrated.

(b) Lifeboat Platform

The strength of the lifeboat platform structure supporting the lifesaving appliances is to be designed to meet the following requirements:

(i) The most adverse combination of list and trim for which lifeboat launching is possible with Safe Working Load (total weight of lifeboat, passengers and supplies) with allowable stresses equal to Ultimate Tensile stress divided by a factor of 4.5.

(ii) The most critical motion at the transit draft with allowable stresses equal to the minimum yield stress divided by a factor of 1.25. For self-elevating units the worst motion can be taken as 15° single amplitude rolling or pitching with 10 second period without a motion calculation.

(c) Crane Pedestal and Foundation

The crane pedestal is to be designed in accordance with the recognized standard that the crane is certified to, such as "RULES FOR THE CONSTRUCTION AND SURVEY OF CARGO GEAR".
In addition, it should also be designed to resist motion-induced loads in severe storm, normal operating and transit conditions using the allowable stresses defined in 13.2.1(b), considering the operating limits of the crane.

The hull structure supporting the pedestal should also be designed to resist the same applied loads as the pedestal using the allowable stresses defined in 13.2.1(b).

13.2.5 Higher-strength Materials

(a) General

In general, applications of higher-strength materials for stiffeners, beams, girders and webs are to meet the requirements of this section, but may be modified as permitted by the following paragraphs. Calculations are to be submitted to show adequate provision to resist buckling.

(b) Watertight Bulkheads and Flats and Tank Bulkheads and Flats

Each stiffener, beam, girder and web of higher-strength material, in association with the higher-strength plating to which it is attached, is to comply with the requirements of the appropriate preceding paragraphs of this section and is to have a section modulus SM_{hts} not less than obtained from the following equation:

$SM_{hts} = SM\ (Q)$

where

SM = Required section modulus in ordinary-strength material as determined in 13.2.2(c), 13.2.2(e), 13.2.3(c), and 13.2.3(e), respectively

Q = See Table III 13-4 below

Table III 13-4
Values of Q

Specified Minimum Yield Stress (N/mm^2)	Q
235	1.0
265	0.93
315	0.78
340	0.74
355	0.72
390	0.68

Notes:
(1) Intermediate values are to be calculated by linear interpolation.
(2) Q factors for steels having a yield stress higher or lower than shown above will be specially considered.

The above criteria is also applicable to the required section modulus for corrugated watertight and tank bulkheads of higher-strength material, as determined in 13.2.2(d)(ii) and 13.2.3(d), respectively.

13.2.6 Self-Elevating Units

(a) Application

This section applies to self-elevating units, as defined in 13.1.1(b)(i).

(b) General Requirements for Materials and Scantlings

(i) Material Selection

The following structural elements of a self-elevating unit are typically grouped according to their material application categories such as Special, Primary and Secondary (see Fig. III 13-4).

(1) Special Application Structures (Most Critical)

a) Vertical columns in way of intersection with the mat structure

b) Intersections of lattice type leg structures which incorporate novel construction, including the use of steel castings

(2) Primary Application Structures (Intermediate)

a) External plating of cylindrical legs

b) Main structural members of lattice type legs such as the chords, diagonals, horizontals and gussets

c) Combinations of bulkhead, deck, side and bottom plating within the upper hull, which form "Box" or "I" type main supporting structure (i.e., a deep bulkhead together with its deck and bottom plating forming "Box" or an "I" beam)

d) Jack-house supporting structure and bottom footing structure which receives initial transfer of load from legs

e) Internal bulkheads, shell and deck of bottom mat or spud-can supporting structures which distribute major loads, either uniform or concentrated.

f) Fixed frames in jacking or other self-elevating systems

g) Moveable cantilever structures supporting the operating derrick

h) Crane pedestal and support structure

(3) Secondary Application Structures (Least Critical)

a) Internal framing of cylindrical legs

b) Structural members of lattice type legs such as internal bracings

c) Bulkhead, deck, side and bottom plating within the upper hull, which do not form "Box" or "I" type main supporting structure, and the internal members attached to such plating

d) Internal bulkheads, shell and deck of bottom mat or spud-can supporting structures which do not distribute major loads

e) Floating frames or yokes in jacking or other self-elevating systems

f) Substructures and moveable skid beam structures supporting the operating derrick, except where the structure is considered primary application

g) Lifeboat platform

h) Pipe racks

i) Flare boom support structure

(ii) Scantlings

Scantlings of the major structural elements of the unit are to be determined in accordance with the requirements of sub-sections 13.2.1 and 13.2.2. Where applicable, and except as outlined below, scantlings are also to meet the requirements of the Rules.

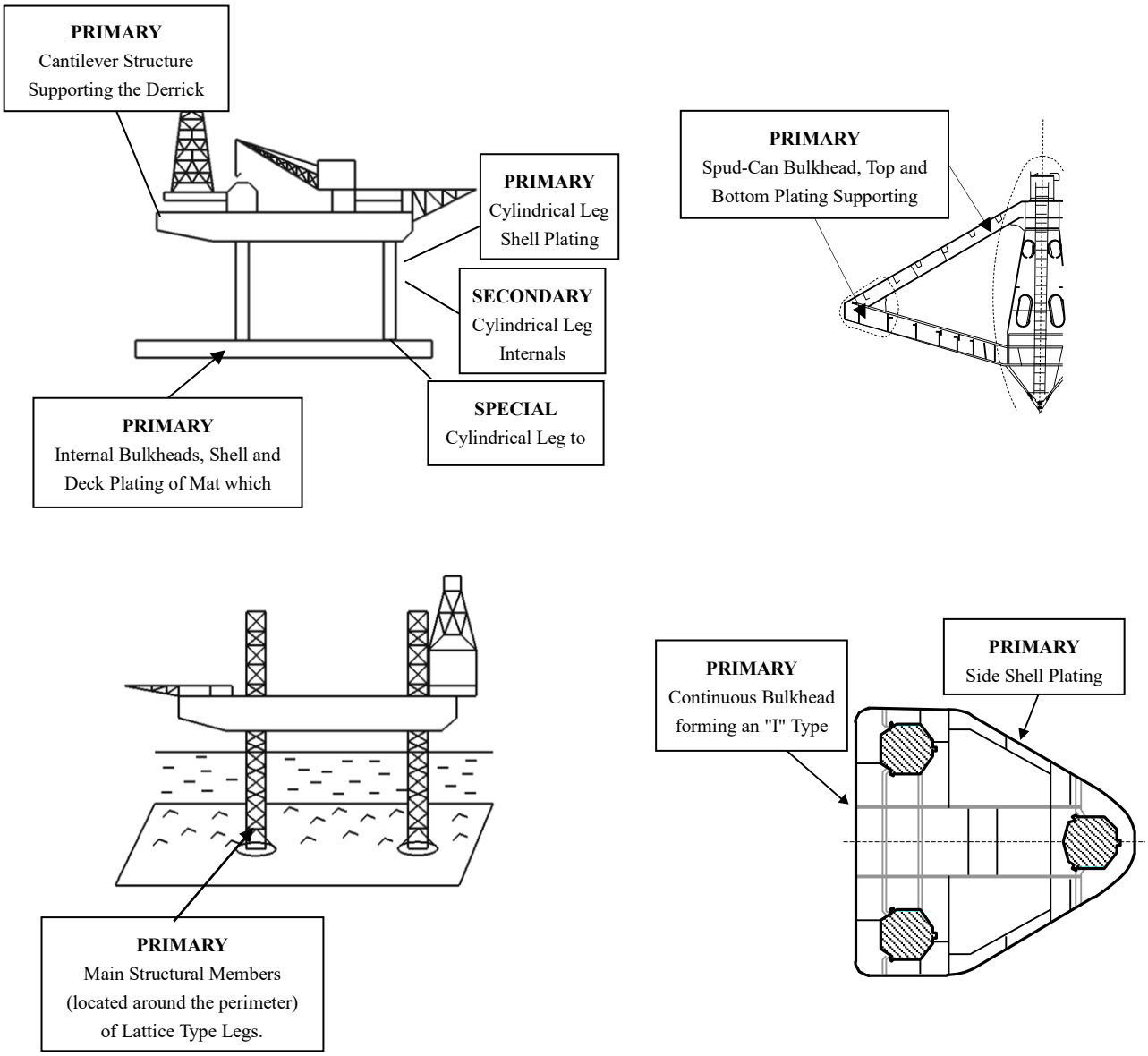

Fig. III 13-4
Typical Grades for Self-Elevating Units

(c) Units Elevated Modes

(i) General

In elevated modes, the unit is to have sufficient positive downward gravity loading to withstand overturning and an adequate air gap to prevent waves from striking the hull. Each leg is to be adequately preloaded to the maximum anticipated vertical reaction at the spudcan. The requirements in 13.2.6(c)(ii), 13.2.6(c)(iii) and 13.2.6(c)(iv) are to be complied with for a unit in elevated modes.

(ii) Safety Against Overturning

Units which are to rest on the sea bed are to have sufficient positive downward gravity loadings on the support footings or mat to withstand the overturning moment due to the combined environmental loads from any direction with the lateral deflection of the legs taken into consideration.

The safety against overturning is to be assessed using the most unfavorable direction and combination of environmental, gravity, variable, and functional loads in both normal operating and severe storm conditions.

Units with individual footings are to have righting moments calculated about the most unfavorable axis through the center of one or more footings and are to have a minimum factor of safety of 1.1 for the conditions defined below.

Units with a mat are to have righting moments calculated about the most highly stressed edge of the mat and are to have a minimum factor of safety of 1.3 for the conditions defined below.

(1) Nominal Loading Conditions for Calculation of Safety Against Overturning

a) Normal operating Condition. Units are assumed to have minimum design variable loads and the cantilever in the most unfavorable position with the associated design operating load.

b) Severe Storm Condition. Units are assumed to have minimum design variable loads and the cantilever in the design position.

(iii) Wave Clearance

A crest clearance of either 1.2 m or 10% of the combined storm tide, astronomical tide, and height of the maximum wave crest above the mean low water level, whichever is less, between the underside of the unit in the elevated position and the crest of the wave is to be maintained. This crest elevation is to be measured above the level of the combined astronomical and storm tides.

(iv) Preload

(1) Capability
Units without bottom mats are to have the capability of being preloaded such that the vertical leg reaction achieved on each leg is at least equal to the computed maximum vertical leg reaction due to the maximum gravity and functional loads plus overturning load of the severe storm condition.

(2) Leg Strength
All legs are to have adequate strength to withstand the preload condition described in 13.2.6(c)(iv)(1). The factor of safety for combined loadings given in 13.2.1(b)(ii) is to be used when considering structural aspects of the preload condition.

(v) Wave-Induced Dynamic Responses

Consideration is to be given to the possibility of structural vibrations induced by the action of waves in the case of self-elevating units in elevated condition. The dynamic response induced by the actions of waves or waves acting with current is to be considered if either of the following conditions is met.

(1) The natural vibratory period, T_n (in seconds), of the unit in a global translational mode (i.e., either lateral deck sway or surge displacement) is in the range 0.9 to 1.1 of the wave period, T (in seconds).

(2) The dynamic amplification factor (DAF), obtained in the manner described below is greater than 1.10.
Tn can be determined from the following equation applied to one leg:

$$T_n = 2\pi\sqrt{\frac{M_e}{K_e}}$$

where

M_e = Effective mass associated with one leg. This is to consider: the mass representing the Total Elevated Load 13.1.1(h) divided by the number of legs; the mass of a leg above its effective clamping location; and one half the mass of a leg below the effective clamping location, excluding the spudcan, but including the added mass of water displaced by the leg.

K_e = Effective bending stiffness of one leg to resist horizontal displacement at the level of the elevated hull. The determination of the leg bending stiffness is to consider: the leg as being pin-ended at least 3 m below the sea bed, the hull to leg stiffness, and the effects of lateral frame displacement on the leg with the highest compressive load due to the supported weight and the other environmental load effects acting with considered wave and current.

The dynamic amplification factor, DAF is determined from the following equation:

$$DAF = \left\{\left[1 - \left(\frac{T_n}{T}\right)^2\right]^2\right\} + \left[2c\left(\frac{T_n}{T}\right)^2\right]^{-0.5}$$

where:
c = Fraction of critical damping (to be taken ≤ 7 percent)
T_n and T are as previously defined.

(d) Legs

(i) Legs in Elevated Condition

(1) Leg Types
Legs may be either shell type or truss type. Shell type legs may be considered as either stiffened or unstiffened shells. Legs may have individual footings or may be attached to a bottom mat.

(2) Leg Scantlings
Legs are to be designed to adequately resist the anticipated total elevated loads and environmental loads for all elevated modes of operation. Leg scantlings are to be determined in accordance with an acceptable method of rational analysis. Calculations are to be submitted for review.
When computing stresses in legs, the maximum overturning moment or base shear on the unit, using the most adverse combination of applicable variable loadings together with the loadings.. Forces and moments due to lateral frame deflection of the legs (P-Δ effect) and wave induced dynamic response as outlined in 13.2.6(c)(v) are to be taken into account.

(3) Spudcan-Soil Interaction
Legs without mats, which may penetrate the sea bed, are to be considered pinned at least 3 m below the sea bed. However when considering a loading condition that includes the unit's dynamic response, credit may be given to the added stiffness provided by spudcan-soil interaction in accordance with 13.2.6(d)(i)(4) below. But where use is made of the added spudcan-soil stiffness to offset the effects of dynamic response, it is required that the limiting wave or wave with current condition that satisfies the Rules without the added stiffness is to be established.

(4) Sea Bed Conditions
Where it is desired, as permitted in 13.2.6(d)(i)(3), to consider the added stiffness provided by the spudcan-soil interaction, the rotational stiffness from the interaction is limited to a maximum value based on the equations below. The Owner may select individual values of the rotational stiffness from zero (representing the pinned condition) to the maximum as the basis of the conditions that are reviewed in the unit's classification and listed in the Operating Manual.

Note: It is suggested that the sensitivity of the unit's strength and dynamic response be investigated using a range of values for the spudcan-soil stiffness.
The maximum extent to which this rotational stiffness can be applied to the system, $K_{rs,\ maximum}$ is defined by the following equations.

$$K_{rs,\ maximum} = \frac{\frac{EI}{L}}{C_{min}} \quad \text{.....[1]}$$

$$C_{min} = \frac{1.5 - J}{J + F} \quad \text{.....[2]}$$

$$J = 1 + \frac{7.8I}{A_S L^2} \quad \text{.....[3]}$$

$$F = \frac{12IF_g}{AY^2} \quad \text{.....[4]}$$

where:

I = Equivalent Leg Moment of Inertia, in m^4

A = Equivalent Leg Axial Area, in m^2

A_s = Equivalent Leg Shear Area, in m^2

L = Leg length, in m , taken as the sum of the distance from the underside of the hull to the sea bed plus the sea bed penetration [min. of 3 m].
The minimum leg lengths to be used in determination of values of $K_{rs,\ maximum}$ is $L_{min} = 4.35\ (I/A_s)^{0.5}$. For leg lengths less than L_{min}, the $K_{rs,\ maximum}$ is to be set at the value obtained when the leg length is L_{min}.

E = Elastic modulus of the leg material as 200 GPa for steel

F_g = Parameter to reflect the number of legs
= 1.125 (for 3 leg unit), 1.0 (for 4 leg unit)

Y = For a 3-leg unit, is the distance, in m, between the centerline of one leg and a line joining the centers of the other two legs
= Or for a 4-leg unit, is the distance, in m, between the centers of leeward and windward rows of legs; in the direction being considered

$K_{rs,\ maximum}$ is in the units of N-m/rad

(ii) Legs in the Transit Condition

(1) Legs in Field Transit Condition
Leg strength is to be developed to withstand a bending moment caused by a 6-degree single amplitude roll or pitch at the natural period of the unit plus 120% of the gravity moment at that angle of inclination of the legs. Special consideration, based on submitted data, will be given to angles of inclination less than 6 degrees when the separation between the bottom of the hull and the top of the mat or the lower tip of the spudcan exceeds 15% of the maximum separation. The structural adequacy of the legs is to be investigated for any anticipated vertical position with respect to the hull during transit moves.

(2) Legs in Severe Storm Transit Condition
Legs are to withstand acceleration and gravity bending moments resulting from the motions in the most severe anticipated environmental transit conditions, together with wind moments corresponding to a velocity of not less than 51.5 m/s (100 kn). The motions may be determined by acceptable calculation or model test methods. Alternatively, legs are to withstand a bending moment caused by minimum criteria of a 15 degree single amplitude roll or pitch at a 10 second period plus 120% of the gravity moment at that angle of inclination of the legs. The structural adequacy of the legs is to be investigated for any anticipated vertical position with respect to the hull during transit moves. For severe storm transit conditions, it may be necessary to reinforce the legs or to remove leg sections.

(e) Hull Interface Structure with Legs

Jackcases and associated supporting bracing system are to have adequate strength to properly transmit the loads between the legs and the hull using the allowable stresses defined in 13.2.1(b).

In no case, are the loads imposed at the holding mechanism of the jacking system or the fixation system to exceed the holding capacity defined by the manufacturer of the device for all modes of operation.

During lifting operations, the loads imposed on the jacking system are to consider the effects of friction at the leg guides. Allowance for the friction at the leg guides is to be not less than 5% of the total lifting gravity loads.

(f) Hull Structure

The hull is to be considered as a complete structure having sufficient strength to resist all induced stresses while in the elevated position and supported by all legs. Special attention is to be paid to the maximum total elevated load in the normal operating condition. The total elevated load including gravity and functional loads is to be distributed in accordance with each load's distribution and point of action. The scantlings of

the hull are then to be determined consistent with this load distribution, but the scantlings are not to be less than those required by 13.2.6(b)(ii).

(g) Spudcan and Bottom Mat

(i) Spudcan

(1) General

The structure of a spudcan is to be designed for the loads imposed on it in both the afloat and the elevated modes of operation. In the afloat mode, the structure is to be capable of withstanding the hydrostatic pressure, taking into account whether or not the spudcan is freely vented to the sea once it is submerged. In the elevated mode, the structure is to be capable of withstanding the loads imposed on it by the leg, and be able to transfer these loads effectively to the foundation beneath it. These loads are composed of the gravity load of the leg and hull; variable and functional loads; the environmental loads from wind, waves, and current acting on the leg and hull; and the effects of any applicable preload conditions. It is important to note that the leg-to-spudcan connections represent a primary load path, and they are to be carefully designed to avoid stress concentrations. It is equally important to consider that a self-elevating unit may be sited in a wide variety of sea bottom conditions, including rocky foundations with virtually zero penetration, soft clay bottoms with deep penetrations, hard sandy bottoms which are prone to scour, and sloping strata that lead to eccentric contact area and therefore eccentric loading on the spudcan.

(2) Afloat Mode Loading Conditions

To address the afloat mode loading conditions, the scantlings of a spudcan are to be designed using the deep tank requirements with appropriate design heads, h. The following values of h are to be used in the formulas given in13.2.3(b) and13.2.3(c).

a) For a spudcan that is vented freely to the sea:

Plating: h = The distance from the lower edge of the plate to the free flooding point or 15 m, whichever is greater.

Stiffeners: h = The distance from the middle of *l* to the same points to which h for plating is measured (see above)

Girders: h = The distance from the middle of *l* to the same points to which h for plating is measured (see above)

b) For a spudcan that is not vented freely to the sea:

Plating: h = The distance from the lower edge of the plate to the maximum water level, taking into consideration the astronomical and storm tides

Stiffeners: h = The distance from the middle of *l* to the same points to which h for plating is measured (see above)

Girders: h = The distance from the middle of *l* to the same points to which h for plating is measured (see above)

(3) Elevated Mode Loading Conditions

To address the elevated mode loading conditions, the scantlings of the plating, stiffeners, and girders of the spudcan are to be adequate to resist a load equal to the maximum required preload, evenly distributed over 50% of the bottom area.

In addition, the spudcans, including the leg-to-spudcan connections, are also to be adequate to transmit the forces and moments from the leg to the foundation, as follows:

a) Preload Condition. The spudcan and the leg-to-spudcan connections are to be designed for a load equal to the maximum required preload, concentrically distributed over a range of bearing areas, from the minimum design penetration up to and including full embedment.

b) Normal Operating and Severe Storm Conditions.

Pin-ended support.

The spudcan and the leg-to-spudcan connections are to be designed for the maximum

vertical reaction and the associated horizontal reaction in conjunction with 35% of the maximum calculated moment at the lower guide, (to account for the eccentric effects of possible scour and uneven bottom conditions) acting in the most unfavorable direction. The maximum lower guide bending moment is to be calculated with pin-ended conditions.

Partially-fixed support.

The spudcan and the leg-to-spudcan connections are to be designed for the following loads:

i) The maximum vertical reaction, in conjunction with the associated horizontal reaction and spudcan-soil fixity moment, acting in the most unfavorable direction.

ii) The maximum spudcan-soil fixity moment in conjunction with the associated vertical and horizontal reactions, acting in the most unfavorable direction.

Notes:

1. If the spudcans are not freely vented to the sea, the effects of hydrostatic pressure are to be included when checking the strength of the spudcans in the preload, normal operating, severe storm, and uneven bottom conditions.
2. The above requirements are for the design of the spudcan and leg-chord-to-spudcan connections. See sub-section 13.2.1, "Structural Analysis" for loading and allowable stress requirements for self-elevating unit global structural analysis and 13.2.6(d)(i)(4), "Sea Bed Conditions" for assumptions of sea bed conditions to be used for structural analyses. Stresses are not to exceed those permitted by 13.2.1(b).

(ii) Bottom Mat

Particular attention is to be given to the attachment, framing and bracing of the mat in order that loads are properly transmitted between the legs and mat. The boundary plating of the tanks which are not vented freely to the sea is not to be less in thickness than would be required for tanks, using a head to the maximum water level, taking into account the astronomical and storm tides. The mat is to be further investigated while resting on the sea bed with 20% of the bottom bearing area washed away due to scouring. Where skirt plates are provided, consideration will be given to their effectiveness in preventing such loss of bottom support due to scouring.

(h) Deckhouses

(i) General

Deckhouses on the main deck are to have sufficient strength for their size and location. When a unit is in elevated mode, deckhouses are subjected to the load effects caused by wind, steel weights, and live loads. However, when the unit is in the transit mode, deckhouses are subjected to the load effects caused by waves in addition to the load effects in the elevated mode. The load effects caused by waves include motion induced inertia and gravity effect due to unit's static inclinations.

Deckhouses are to be designed to adequately resist these load effects in accordance with the following Paragraphs. Paragraphs 13.2.6(h)(i) through 13.2.6(h)(vi) provide the requirements for basic scantlings of the deckhouses in association with their locations on the deck and functions. Paragraph 13.2.6(h)(vii) provides the requirements for the overall strength of the deckhouse in transit.

Deckhouses, which are used as protection for openings leading to spaces below main deck, are also to be designed as a watertight boundary. For deckhouses that are cantilevered over the bow of a unit, the possibility of wave slamming and impact during transit is also to be considered.

(ii) Design Head

The design head for side and end bulkhead plating and stiffeners of deckhouses on the freeboard deck is to be obtained from the following:

$$h = c\, h_b$$

where

h = Design head, in m

h_b = $0.133\,L - 3.0$ m ($L \leq 100$ m)

but not to be less than 2.8 m

c = 1.0 for front bulkheads
= 0.6 for aft bulkheads
= See 13.2.6(h)(v) for side bulkheads
L = Length of the unit, in m .

(iii) Plating

The plating thickness is not to be less than that obtained from the following equation:

$$t = 3s\sqrt{h} \quad \text{mm}$$

In no case is the plate thickness to be less than 5.0 + 0.01L mm.

where

s = Spacing of stiffeners, in m
h = Design head, as defined in 13.2.6(h)(ii)

(iv) Stiffeners

Each stiffener in association with the plating to which it is attached is to have a section modulus, SM, not less than that obtained from the following equation:

$$SM = 3.5\ s\ h\ l^2 \quad \text{cm}^3$$

where

s = Spacing of stiffeners, in m
h = Design head, as defined in 13.2.6(h)(ii)
= Tween deck height, in m

(v) House Sides

Side bulkheads of houses are generally to have scantlings based on the requirements for after bulkheads of houses. Where they are close to the side shell of the unit, they may be required to conform to the requirements of bulkheads of unprotected house fronts.

(vi) End Attachment

Both ends of the webs of lowest tier bulkhead stiffeners are to be efficiently attached.

(vii) Racking Resistance

Partial bulkheads, deep webs, etc. are to be fitted at the sides and ends of large deckhouses to provide resistance to racking caused by the most adverse combination of the load effects in 13.2.6(h)(i). Calculations using FEM to demonstrate the adequacy of the yielding and buckling strength of the large deckhouse may be required to be submitted for review.

13.3 Subdivision and Stability

13.3.1 General

(a) Load Line

Every mobile unit is to have marks which designate the maximum permissible draft when the unit is in the afloat condition. Such markings are to be placed at suitable visible locations on the structure, to the satisfaction of the Society.

The load lines are to be established under the terms of the International Convention on Load Lines. Where minimum freeboards cannot be computed by the normal methods laid down by the Convention, they are to be determined on the basis of compliance with the intact or damage stability requirements for afloat modes of operation. The requirement that the draft of the unit not exceed the assigned load line may be considered temporarily not applicable for bottom-supported units when raising, lowering or resting on the sea bed.

The requirements of the International Convention on Load Lines with respect to weathertightness and watertightness of decks, superstructures, deckhouses, doors, hatchway covers, other openings, ventilators, air pipes, scuppers, inlets and discharges, etc., are to be taken as a basis for all units in the afloat condition.

(b) Inclining Experiment

An inclining test will be required for the first unit of a series, when as near to completion as practical, to determine the lightweight and position of center of gravity. An inclining test procedure is to be submitted for review prior to the test, which is to be witnessed by a Surveyor. For successive units of a series, which are considered by the Society to be identical with regard to hull form and arrangement, with the exception of minor changes in machinery, outfit, etc., detailed weight calculations showing only the differences of weight and centers of gravity will be satisfactory, provided the accuracy of the calculations is confirmed by a lightweight survey. The results of the inclining test, or lightweight survey and inclining experiment adjusted for weight differences, are to be reviewed.

The results of the inclining experiment and lightweight survey are to be broken into the independent components of the unit (legs, platform, cantilever, skid unit, etc.) and are to indicate clearly the position of these components.

13.3.2 Stability and Watertight/Weathertight Integrity

(a) Stability

(i) General

All units are to have positive metacentric height in calm water equilibrium position for all afloat conditions, including temporary positions when raising or lowering. For the purpose of determining compliance with the stability requirements contained herein, it is to be assumed that the unit is floating free of mooring restraints. However, detrimental effects of catenary mooring systems or of the thrusters for dynamically positioned units are to be considered.

The metacentric height is to be specified for each mode of operation and guidance is to be included in the Operating Manual on the procedure to determine and satisfy the expected metacentric height. This may be accomplished by including the minimum metacentric height in the calculation of the allowable KG.

The wind speeds referenced in this Section are to be used to calculate heeling moments for intact and damage stability calculations. These wind speeds are not intended to represent actual environmental limits.

(ii) Stability Afloat

All units are to meet stability requirements set forth herein for all applicable conditions. However, units designed to ballast or deballast through designated draft ranges or "zones" need only comply with the specific metacentric height when ballasting or deballasting through these designated "zones".

(1) Intact Stability

All units are to have sufficient stability (righting stability) to withstand the heeling moment equivalent to the one produced by a wind from any horizontal direction and speed as given below in accordance with the stability criteria given in 13.3.2(b). The wind speed for unrestricted offshore service for normal operating and transit conditions is not to be less than 36 m/sec (70 kn). In addition, the unit is to be capable of withstanding a severe storm condition applying a wind speed of not less than 51.5 m/s (100 kn). In all cases, the wind speed is to be specified. Units not designed to withstand the above heeling moments will be considered for classification for "Restricted Service" in association with a heeling moment equivalent to a minimum wind speed of 25.8 m/s (50 kn).

(2) Damage Stability

All units are to have sufficient buoyancy and stability to withstand a heeling moment equivalent to a 25.8 m/s (50 kn) wind superimposed from any direction with the following causes of flooding, which are to be individually applied to the unit.

a) Collision Damage

Flooding from the sea of compartments in accordance with the applicable damage penetration requirements of 13.3.2(b)(iii) for the type of unit under consideration. Such damage need only be applied at drafts associated with normal operating and transit conditions.

b) Remote Flooding

Flooding of a single watertight compartment located wholly or partially below the draft associated with any mode of operation afloat (see 13.1.1(i)), which is:

i) A compartment containing pumps used for the handling of water ballast, or

ii) A compartment containing machinery with a sea water cooling system, or

iii) A compartment adjacent to the sea

c) Self-Elevating Units

Additionally, for self-elevating units, flooding of any single watertight compartment.

(3) Damage Stability – General Conditions

In 13.3.2(a)(ii)(2)b) above, two conditions "a compartment containing pumps used for the handling of water ballast" and "a compartment containing machinery with a sea water cooling system", only those spaces required to be functional in the afloat condition need be considered.
In condition "a compartment adjacent to the sea" in 13.3.2(a)(ii)(2)b) and 13.3.2(a)(ii)(2)c) above, for compartments designed to carry a specified amount of water ballast and so stipulated in the operating manual, the flooding of that compartment may be limited to the portion of the compartment not occupied by the specified water ballast.
For calculation purposes, flooded compartments are to be assumed to be free flooding to the damage waterline (i.e., as if they are in direct communication with the sea.).
For the purpose of damage stability calculations the following minimum permeability values are recommended:

Storerooms	0.95
Machinery spaces	0.85
Accommodation spaces	0.95
Tanks and voids	0.95

Other values may be used if adequately supported by calculations.
The ability to compensate for damage incurred, by pumping out or by ballasting other compartments, etc., is not to be considered as alleviating the requirements of 13.3.2(b)(ii)(2), 13.3.2(b)(ii)(3).

(4) Alternatives for Treatment of Void Spaces

a) For each void not provided with bilge or drainage systems but with a sounding arrangement, the effects of undrainable flooding of the void on the unit's weight and center of gravity location are to be determined for all afloat conditions, including temporary positions when ballasting or deballasting.

b) For voids not provided with bilge or drianage systems and sounding arrangement, the unit's maximum allowable KG at each draft, as determined in accordance with this Subsection, is to be reduced by an amount equal to the largest vertical moment above baseline of a non-complying void divided by the unit's displacement at that draft.

c) The Operating Manual is to include the information and procedures to account for the flooding of undrainable voids.

(b) Stability Criteria

(i) General

Righting moment curves and heeling moment curves with supporting calculations are to be prepared for the full range of anticipated operating drafts. The calculations are to be performed in a manner to reflect a sustained wind force from any horizontal direction in order to determine the critical stability axis. For purposes of these calculations, the configuration of the unit is to reflect the actual condition of the unit during afloat operation, the operation of cranes and the position of legs for self-elevating units.

(ii) Righting Moment

(1) Intact Stability Criteria

For self-elevating units and surface type units, the righting energy (area under the righting moment curve) at or before the angle of the second intercept of the righting and the heeling moment curves or the downflooding angle, whichever is less, is to reach a value of not less than 40% in excess of the area under the heeling moment curve to the same limiting angle as indicated in Fig. III 13-5.

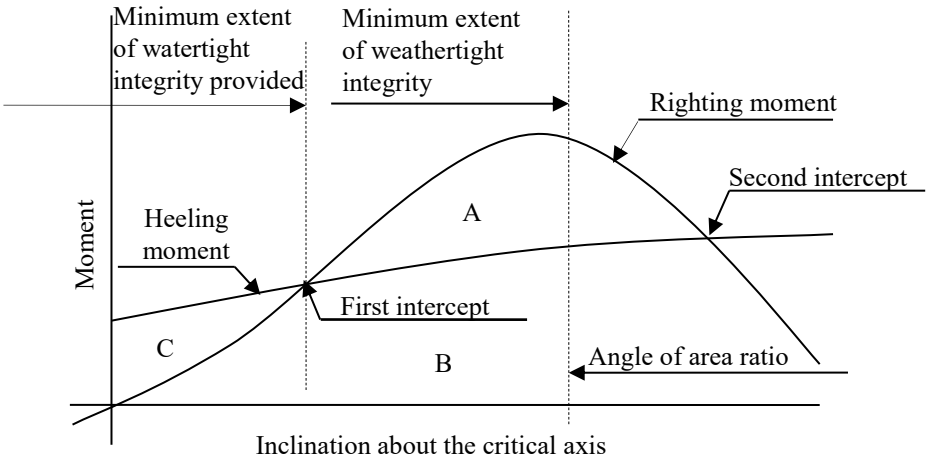

Area[A+B] ≥ K Area[B+C]

K = 1.4

Fig. III 13-5
Intact Stability Curve

(2) Damage Stability Criteria

The final waterline, after assuming damage under 13.3.2(a)(ii)(2) with an a heeling moment equivalent to a 25.8 m/s (50 kn) wind superimposed from any direction (See Fig. III 13-6), is not to exceed the levels to which watertight integrity has been shown on the diagrams submitted.

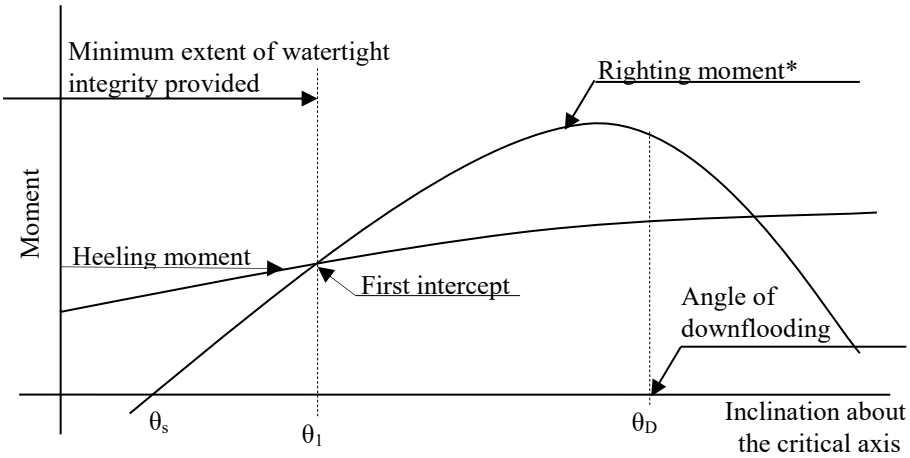

* Righting moment ≥ Heeling moment
$\theta_D \geq \theta_1$

Fig. III 13-6
Damage Stability Curve

(3) Residual Stability Criteria – Self-Elevating Units
In addition to the requirements contained in 13.3.2(b)(ii)(2), self-elevating units are to have sufficient residual stability to satisfy the following criterion after assuming the single-compartment flooding specified in 13.3.2(a)(ii)(2)c) and with the assumption of no wind:

$RoS \geq 7° + (1.5\ \theta_s)$

RoS is not to be less than 10 degrees.
where

RoS	=	Minimum range of stability, in degrees
	=	$\theta_m - \theta_s$
θ_m	=	Maximum angle of positive stability, in degrees
θ_s	=	Static angle of inclination after damage, in degrees

The range of stability is determined without reference to the angle of downflooding.
See Fig. III 13-7.

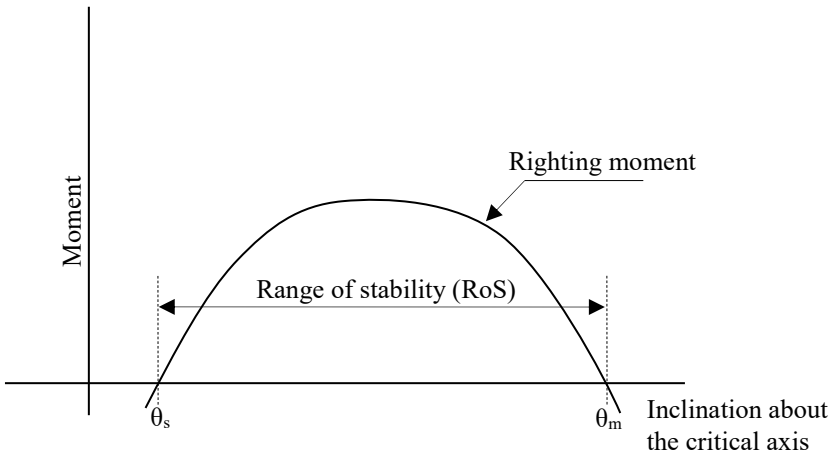

RoS ≥ 7° + 1.5θ_S
RoS is not to be less than 10°

Fig. III 13-7
Residual Damage Stability Requirements for Self-Elevating Units

(iii) Extent of Damage for Damage Stability Studies

In assessing the damage stability of mobile offshore units, as required by 13.3.2(a)(ii)(2), the following extent of damage is to be assumed.

If damage of a lesser extent results in a more severe condition, such lesser extent is to be assumed.

All piping, ventilating systems, trunks, etc., within the assumed damage area are to be considered damaged. Positive means of closure are to be provided to preclude progressive flooding of other intact spaces.

(1) Self-Elevating Units
For self-elevating units, the following extent of damage is to be assumed to occur between effective watertight bulkheads.

a) Horizontal depth of penetration 1.5 m

b) Vertical extent of damage from the bottom shell upwards without limit. Where a bottom mat is fitted, assumed damage penetration simultaneous to both the mat and the upper hull need only be considered when the lightest draft allows any part of the mat to fall within 1.5 m vertically of the waterline, and the difference in horizontal dimension of the upper hull and mat is less than 1.5 m in the area under consideration.

The distance between effective watertight bulkheads or their nearest stepped portions which are positioned within the assumed extent of horizontal penetration should not be less than 3.0 m. Where there is a lesser distance, one or more of the adjacent bulkheads are to be disregarded.

(iv) Heeling Moment

Heeling moments represent an idealization of the total environmental loads on the unit. For purposes of calculations they are taken as the moments which result from wind forces on the unit at the speeds specified in 13.3.2(a)(ii).

The heeling moment is to be calculated at several angles of inclination for each mode of operation. The calculations are to be performed in a manner to reflect the range of stability about the critical axis. The lever for the heeling force is to be taken vertically from the center of lateral resistance or, if available, the center of hydrodynamic pressure of the underwater body to the center of pressure of the areas subject to wind loading.

For dynamically-positioned units, the heeling moment is to be taken as the sum of a wind force up to the aggregate thrust of the thruster system in each direction analyzed with a lever arm equal to the distance from the center of wind pressure to the center of the thruster propeller disc and the remaining

wind force (if any) with a lever arm equal to the distance from the center of wind pressure to the center of lateral resistance. For this purpose, the aggregate thrust need not be taken greater than the wind force.

For self-elevating units, the heeling moment of the unit is to be investigated for any anticipated leg position relative to the hull.

In calculating heeling moments for surface type units having no independent platforms, the curve may be assumed to vary as the cosine function of the inclination angle.

(v) Wind Tunnel Tests

Heeling moments derived from wind tunnel tests on a representative model of the unit may be considered as alternatives to the method given herein. Such heeling moment determination is to include both lift and drag effects at appropriate inclination angles. Testing should include the full range of possible drafts, wind direction and angles of heel, to the maximum extent possible. The testing program is to be submitted for review.

(vi) Alternative Stability Criteria

(1) General

Alternative stability criteria may be considered acceptable by the Society, provided the criteria affords adequate righting moment to resist the overturning effects of operating and environmental forces and sufficient margins to preclude downflooding and capsizing in intact and damaged conditions.

(2) Guidelines

The following will be considered in determining the adequacy of alternative criteria submitted for review:

a) Environmental conditions representing realistic winds (including gusts) and waves appropriate for various modes of operation

b) Dynamic response of a unit. Where appropriate, the analysis should include the results of wind tunnel tests, wave tank model tests and nonlinear simulation. Any wind and wave spectra used should cover sufficient frequency ranges to ensure that critical motion responses are obtained.

c) Potential for downflooding, taking into account dynamic responses and wave profile

d) Susceptibility to capsizing, considering the unit's restoration energy and maximum dynamic response

e) A safety margin consistent with the methodology to account for uncertainties

f) Damage assumptions at least equivalent to present Rule requirements

(c) Watertight/Weathertight Integrity

(i) Weathertight Integrity

Closing appliances are to be as prescribed by applicable load line requirements. In all cases, external openings whose lower edges are below the levels to which weathertight integrity is to be ensured, as shown by the diagrams to be submitted are to have weathertight closing appliances. The referenced diagrams may define different extents of weathertight integrity for each mode of operation afloat (See 13.1.1(i)). Openings fitted with appliances to ensure weathertight integrity are to effectively resist the ingress of water due to intermittent immersion of the closure in complying with the intact stability criteria (See 13.3.2(b)(ii)(1)).

A plan, identifying the disposition (open or closed) of all non-automatic closing devices and locations of all watertight and weathertight closures, for each mode of operation afloat is to be submitted for review prior to the unit's delivery. Upon satisfactory review, the plan is to be incorporated into the Operating Manual.

(ii) Watertight Integrity

All internal and external openings whose lower edges are below the levels to which watertight integrity is to be ensured, as shown by the diagrams submitted are to be fitted with appliances to ensure watertight integrity.

(1) Internal Openings Used for Access While Afloat

Internal openings fitted with appliances to ensure watertight integrity, which are used during operation of the unit while afloat, are to comply with the following.

a) Doors and hatch covers are to be capable of being remotely controlled from a normally manned central position, such as the bridge or ballast control room, as well as being operable locally from both sides of the bulkhead. Open/shut indicators are to be provided at the control station. In addition, remotely operated doors provided to ensure the watertight integrity of internal openings which are used while afloat are to be sliding watertight doors with audible alarm. The power, control and indicators are to be operable in the event of main power failure. Particular attention is to be paid to minimizing the effect of control system failure. Each power-operated sliding watertight door is to be provided with an individual hand-operated mechanism. It shall be possible to open and close the door by hand at the door itself from both sides.

b) The provisions regarding remote control under 13.3.2(c)(ii)(1)a) are not required, provided the doors are of the quick-acting type and an indicating system (e.g., light signals) is arranged showing personnel, both locally and at a normally manned central position, whether the doors in question are open or secured closed. Hatch covers required for watertight integrity are to have similar indicators. In addition, a sign is to be posted near the opening to the effect that the closing appliance is to be secured closed while afloat and opened only during actual use.

c) The closing appliances are to have strength, tightness and means for securing which are sufficient to maintain watertightness under the water pressure of the watertight boundary under consideration.

(2) Internal Openings Secured Closed While Afloat

Internal openings fitted with appliances to ensure watertight integrity, which are normally to be secured closed while the unit is afloat, are to comply with the following.

a) A sign to the effect that the opening is to be secured closed while afloat during normal operation is to be posted near the opening.

b) Opening and closing of such closure devices is to be noted in the unit's logbook.

c) Manholes fitted with bolted covers need not be dealt with as under 13.3.2(c)(ii)(2)a).

d) The closing appliances are to have strength, tightness and means for securing which are sufficient to maintain watertightness under the water pressure of the watertight boundary under consideration.

(3) External Openings Used While Afloat

External openings which are used during operation of the unit while afloat are to comply with the following requirements.

a) The lower edges of all openings, including air pipes, ventilators, ventilation intakes and outlets (regardless of closing appliances), non-watertight hatches and weathertight doors, are to be above the levels to which watertight integrity is to be ensured.

b) Normally closed openings fitted with appliances to provide watertight integrity, such as non-opening side scuttles, manholes and small hatches, may be located below the level of watertight integrity. Small hatches are those which are normally used for access by personnel. Such small hatches, which may be submerged in case of damage, are to be closed by approved quick-acting watertight covers of steel or equivalent material. An indicating system, e.g., light signals, is to be arranged showing personnel, both locally and at a central position, whether the hatch covers in question are open or secured closed. In addition, a sign is to be posted near the opening to the effect that the closing appliance is to be secured closed while the unit is afloat and opened only during actual use. Such openings are not to be regarded as emergency exits.

c) Where flooding of chain lockers or other buoyant volumes may occur, the openings to these spaces should be considered as downflooding points.

(4) External Openings Secured Closed While Afloat

External openings fitted with appliances to ensure watertight integrity, which are normally to be secured closed while the unit is afloat, are to comply with the requirements of 13.3.2(c)(ii)(2).

(iii) Penetrations

Where watertight bulkheads and flats are necessary for damage stability, they are to be made watertight throughout. Where individual lines, ducts or piping systems serve more than one compartment or are

within the extent of damage, satisfactory arrangements are to be provided to preclude the possibility of progressive flooding through the system.

(d) Onboard Computers for Stability Calculations

The use of onboard computers for stability calculations is not a requirement of class. However, if stability software is installed onboard units, it should cover all stability requirements applicable to the unit and is to be approved by the Society.

13.4 Mooring Systems and Equipment

13.4.1 For applicable requirements for mooring systems and equipment, refer to Chapter 25 of Part II of the Rules.

13.4.2 Position Mooring Equipment

When requested by the Owner, the symbol **POME** may be placed after classification symbol, which will signify that the mooring equipment, anchors, chain or wire rope which have been specified by the Owner for position mooring have been tested in accordance with the specifications of the Owner and in the presence of a Surveyor.

Fabrication tests of the position mooring equipment, such as anchors, chains, wires, shackles, etc. are to at least satisfy the requirements of Part XI and Part XII of the Rules for the respective sizes of equipment.

13.4.3 Position Mooring Systems

When requested by the Owner, the Society is prepared to certify the position mooring capability of the unit. A unit so certified for position mooring will be designated by the symbol **POMS** placed after the classification symbol.

(a) Anchoring Systems

(i) General

Plans showing the arrangement and complete details of the anchoring system, including anchors, shackles, anchor lines consisting of chain, wire or rope, together with details of fairleads, windlasses, winches and any other components of the anchoring system and their foundations and attachments to the unit are to be submitted for review.

(ii) Design

(1) An analysis of the anchoring arrangements expected to be utilized in the unit's operation is to be submitted. Among the items to be addressed are:

a) Design environmental conditions of waves, winds, currents, tides and ranges of water depth.

b) Air and sea temperature.

c) Description of analysis methodology.

(2) The anchoring system is to be designed to prevent a failure of any single component causing progressive failure of the remaining anchoring arrangements.

(3) Anchoring system components are to be designed utilizing adequate factors of safety (FOS) and a design methodology suitable to identify the most severe loading condition for each component. In particular, sufficient numbers of heading angles together with the most severe combination of wind, current and wave are to be considered, usually from the same direction, to determine the maximum tension in each mooring line.

(4) When a quasi-static analysis method is applied, the tension in each anchor line is to be calculated at the maximum excursion for each design condition defined in 13.4.3(a)(ii)(5), combining the following steady state and dynamic responses of the unit:

a) steady mean offset due to the defined wind, current and steady wave forces;

b) maximum surge/sway excursions of the unit due to first-order wave excitations in a storm sea-state of three hours' duration. Significant values of surge/sway excursions due to first-order wave excitations may be used for evaluating transient conditions resulting from the sudden failure of any one anchor line. The effects of second order wave-induced motions

are to be included for units when the magnitudes of such motions are considered to be significant.

(5) Factors of safety (FOS) are dependent on the design conditions of the system (intact, damaged, or transient), as well as the level of analyses (Quasi static or dynamic analysis). The minimum Quasi Static FOS, specified in the table below, at the maximum excursion of the unit for a range of headings is to be satisfied if the quasi static method outlined in 13.4.3.(a)(ii)(4) is applied. Otherwise, the minimum Dynamic Analysis FOS in the table below is to be satisfied, including the effects of line dynamics when these effects are considered significant.

Design Condition		Anchor Line FOS	
		Quasi Static	Dynamic Analysis
	-Intact	2.70	2.25
Operating	-Damaged	1.80	1.57
	-Transient	1.40	1.22
	-Intact	2.00	1.67
Servere Storm	-Damaged	1.43	1.25
	-Transient	1.18	1.05

where:
FOS = PB / T_{max}
PB = Maximum rated breaking load of the weakest component of the anchor line.
T_{max} = Maximum anchor line tension calculated in accordance with 13.4.3(a)(ii)(4) or Section 5.1.3.2 of API RP 2SK for each of the following design conditions.

a) Operating Intact.

T_{max} determined under the most severe design environmental conditions for normal operations specified by the Owner or designer with all anchor lines intact.

b) Operating Damaged.

T_{max}, under the operating environmental conditions specified above, but assuming the sudden failure of any one anchor line, after reaching a steady-state condition.

c) Operating Transient.

T_{max}, under the operating environmental conditions specified above, due to transient motions resulting from the sudden failure of any one anchor line.

d) Severe Storm Intact.

T_{max} determined under the most severe design environmental conditions for severe storm specified by the Owner or designer with all anchor lines intact.

e) Severe Storm Damaged.

T_{max}, under the severe storm environmental conditions specified above, but assuming the sudden failure of any one anchor line, after reaching a steady-state condition.

f) Severe Storm Transient.

T_{max}, under the severe storm environmental conditions specified above, due to transient motions resulting from the sudden failure of any one anchor line.

(6) Anchor lines are to be of adequate length to prevent uplift forces on the anchors (unless anchors are specifically designed to withstand such forces) under the design conditions specified in 13.4.3(a)(ii)(5). However, only steady wind, wave and current forces need be applied in evaluating anchor uplift forces in transient conditions.

(7) In general, the maximum surge/sway excursions of the unit due to wave excitation about the steady mean offset are to be obtained by means of model tests. Analytical calculations may be acceptable, provided that the proposed method is based on methodologies validated by model tests.

(8) Other analysis methodologies may be acceptable, provided that a level of safety equivalent to that required by 13.4.3(a)(ii)(4) and 13.4.3(a)(ii)(5) is attained.

(9) Special consideration will be given to arrangements where the anchoring systems are used in conjunction with thrusters to maintain the unit on station.

(b) Equipment

(i) Winches and Windlasses

(1) The design of mooring winches and windlasses is to provide for adequate dynamic braking capacity to control normal combinations of loads from the anchor, anchor line and anchor handling vessel during the deployment of the anchors at the maximum design payout speed of the winch or windlass. Winch and windlass foundations and adjacent hull structures are to be designed to withstand an anchor line load at the winch or windlass at least equal to the rated breaking load of the anchor line.

(2) Each winch or windlass is to be provided with two independent, power operated brakes and each brake is to be capable of holding a static load in the anchor line of at least 50 percent of the anchor line's rated breaking strength. One of the brakes may be replaced by a manually operated brake.

(3) On loss of power to the winches or windlasses, the power operated braking system is to be automatically applied and be capable of holding against 50 percent of the total static braking capacity of the windlass.

(ii) Fairleads and Sheaves

Fairleads and sheaves are to be designed to prevent excessive bending and wear of the anchor lines. The attachments to the hull or structure are to be such as to withstand the stresses imposed when an anchor line is loaded to its rated breaking strength.

(c) Anchor Lines

(i) Anchor lines are to be of a type that is compatible with the design conditions of the anchoring system. Details are to be submitted.

(ii) Means are to be provided to enable the anchor lines to be released from the unit after loss of main power.

(iii) Means are to be provided for measuring anchor line tensions and for initial and periodic calibration of line tension measuring instrumentation.

(d) Anchors

(i) The type and design of anchors are to be submitted for review, together with documentation estimating their holding power in various types of soil.

(ii) Suitable anchor stowage arrangements are to be provided to prevent movement of the anchors during transit.

(e) Quality Control

Details of the quality control of the manufacturing process of the individual anchoring system components are to be submitted. Components are to be designed, manufactured and tested in accordance with recognized standards insofar as possible and practical. Equipment so tested is to, insofar as practical, be legibly and permanently marked with the Surveyor's stamp and delivered with documentation which records the results of the tests.

(f) Control Stations

(i) A manned central control station is to be provided with means to indicate anchor line tensions and to indicate wind speed and direction.

(ii) Reliable means are to be provided to communicate between locations critical to the anchoring operation.

(iii) Each winch or windlass is to be capable of being controlled from a position which provides a good view of the operation. Means are to be provided at the individual winch or windlass control positions

to monitor anchor line tension, winch or windlass power load and to indicate the amount of anchor line paid out.

13.5 Machinery, Equipment and Systems

13.5.1 General

(a) In general, the machinery, equipment and systems are to be in accordance with Part IV & V of the Rules.

(b) The propulsion plant is to be so designed, constructed and installed that any mode of vibrations will not induce excessive stresses within the normal speed range.

(c) In order to maintain sufficient maneuverability and secure control of the unit in all normal circumstances, there is to be sufficient reversing power. For the main propulsion systems with reversing gears, controllable pitch propellers or electric propeller drive, running astern is not to lead to the overload of propulsion machinery.

(d) The parts exposed to corrosive environment are to be made of corrosion resistant materials or provided with effective anti-corrosion means.

13.5.2 Failure protection

(a) In the event of failure, components and systems are to maintain the conditions with the minimum hazard to machinery, human and environment or in a fail- safe state.

(b) The probability of damage caused by component failure or failure to other components is to be reduced to an acceptable level.

(c) The failure of the redundant components in system is not to lead to damage or failure of standby or parallel components of the system.

13.5.3 Drawings and data

The following drawings and data are to be submitted for approval:

(a) General arrangement of pumps and piping

(b) Sanitary system

(c) Bilge and ballast systems

(d) Compressed air systems

(e) Essential control-air systems

(f) Vent, sounding and overflow pipes

(g) Fuel-oil filling, transfer and service systems

(h) Boiler-feed systems

(i) Steam and exhaust piping

(j) Lubricating-oil systems

(k) Hydraulic power piping systems

(l) Essential sea-water and fresh-water service systems

(m) Starting-air systems

(n) Fire-main and fire-extinguishing systems

(o) Steering-gear piping systems

(p) Exhaust piping for internal combustion engines and boilers

13.5.4 Jacking and fixation system

(a) General

This section applies to the design, manufacturing and installation of jacking gear machinery, fixation mechanism and associated systems for the hull of self-elevating units. It is mainly the relevant requirements for yoke and pin type and rack and pinion type jacking systems as well as fixation mechanism usually employed in self-elevating unit.

(b) Drawings and data

The following drawings and data, as appropriate for the type of jacking gear machinery and fixation systems, are to be submitted for approval:

(i) General arrangement of jacking system.
(ii) Schematic diagrams and specifications of jacking and control systems.
(iii) Diagrams and material specifications of principal parts of jacking system.
(iv) Calculations for jacking system (including rack strength, shutting pin and pin structure).
(v) Strength calculations for principal parts of jacking system.
(vi) Diagrams of control systems.
(vii) Construction and installation diagrams of main and auxiliary hydraulic cylinders;
(viii) Construction of shutting pins;
(ix) Arrangement of hydraulic piping system.
(x) Construction of gear transmission devices.
(xi) Jetting leg system.
(xii) Arrangement and specifications of fixation and control systems.
(xiii) Diagrams and material specifications of principal components of fixation system.
(xiv) Calculations for fixation system (including fixation racks, leg rack strength calculation).
(xv) Strength calculations for principal components of fixation system.
(xvi) Failure Mode and Effect Analysis (FMEA).
(xvii) Fatigue strength calculations, if necessary.

(c) Yoke and pin type hydraulic jacking systems and fixation system

(i) For each hydraulic jacking system, shutting pin system and control system, at least two independent power pumps are to be provided. Where any one pump is out of operation, the other pumps are to be operated to the required minimum design power of the system.

(ii) The hydraulic piping is not to be connected with any other piping outside the system. If safety and redundancy are fully considered, the hydraulic power source may be employed in other systems after special safety risk analysis is carried out.

(iii) Oil cylinders are to be provided with cushions or other means for limiting position and the jacking system of each leg is to be provided with a synchronous device.

(iv) At least two sets of positioning fixation mechanism are to be provided on each leg. The calculated load is to be not less than the maximum working load which the leg is capable of withstanding.

(v) The off actions of main and auxiliary shutting pins of legs are to be interlocked. Pilot lamps displaying whether main and auxiliary shutting pins are on or off are to be provided at the control station.

(vi) The bursting pressure of rubber hoses is to be not less than four times the maximum working pressure. Abrupt bends of the hoses are to be avoided, and the radius of curvature is in general to be not less than 10 times the external diameter of the hose. Bending is to be avoided in the connecting end of hoses, and the distance from the connecting end to bending point is to be not less than six times the external diameter of the hose;

(d) Rack and pinion type jacking systems and fixation system

(i) The hydraulic system in rack-and-pinion type jacking systems is to comply with the relevant requirements of 13.5.4(c).

(ii) An automatic fixation mechanism and a manual relief device are to be provided on each transmission shafting.

13.6 Pumps and Piping Systems

13.6.1 General of piping design

In general, the machinery, equipment and systems are to be in accordance with Part VI of the Rules. The use of steel, copper or other non-aluminum pipes, valves and fitting will require special attention to avoid galvanic corrosion with dissimilar metals.

13.6.2 Damage protection

(a) Piping are to be avoided to provide within the assumed damage zones and if not avoidable, analysis is to be carried out. If the piping within the damage zone is broken, it will not lead to further flooding of compartments other than the damaged zone via the broken piping, such piping may be provided within the assumed damage zone.

(b) Besides the requirements of damage stability, the piping serving generators and propulsion plant, ballast piping, bilge piping, bilge suctions and bilge wells are not to be arranged within the assumed damage zones so as to ensure the essential functions of units not impacted by the damage.

13.6.3 Bilge system

(a) The bilge system is to comply with the relevant requirements in Part VI/3.6~3.7 of the Rules.

(b) Flooding in any watertight space is not to cause flooding in other spaces through bilge piping.

(c) The arrangements of suction piping and suctions of main engine room, main generator room, propulsion room and pump rooms are of redundancy.

(d) The bilge water system of hazardous area is to be fully independent from the bilge water system of non-hazardous area.

(e) The slop system and bilge water system are mutually independent.

(f) All distribution valve chests and manual operating valves connected with bilge water pumping arrangements are generally fitted in easily accessible locations. If these valves are installed in the usually unattended spaces below the load line and with no bilge water high-level alarm, these valves are to be capable of being operated from outside the compartments where the valves are located.

13.6.4 Ballast system

(a) The ballast system is to comply with the relevant requirements in Part VI/3.15 of the Rules.

(b) The Self-elevating unit is to be provided with effective ballast systems to perform ballast and deballast services of each ballast tanks of the units.

(c) The Self-elevating unit is to be provided with at least two ballast pumps where the capacity of each ballast pump is to satisfy the demand of ballast and deballast services of the unit. If the submersible pump of the primary seawater system is independently arranged at the different location on board and with ballast functions, it may used as a substitute.

(d) The ballast pumps are to be self-priming unless it can be demonstrated that this requirement would be unnecessary.

(e) Where practicable, level gauges are to be positioned to minimize inaccuracy induced as a result of inclination of the unit.

(f) The equipment, components, piping and electrical circuits are not to be located in the assumed damage zones.

(g) The ballast arrangements of units intended for restricted or special services will be specially considered in each case.

13.6.5 Cooling water system

(a) The cooling water system is to comply with the relevant requirements in Part VI/4.3 of the Rules.

(b) Two or more independently power driven seawater cooling pumps are to be provided on the unit. These pumps are to be of sufficient capacity to supply the units with any one pump out of action.

(c) The two independent water sources are to be fed to seawater cooling pumps for the self-elevating unit in the elevated state.

(d) During the lifting or lowering operation for self-elevating unit, the supply of cooling seawater is not to be affected.

(e) The self-elevating units are to be provided with at least two submersible pumps to supply water far from each other.

(f) The strength of the raw water tower and its components to withstand the maximum design environmental conditions for the unit in elevated condition is to be assessed and calculations in this regard are to be submitted for review.

(g) There are to be at least two hose reels provided. The hose reel units are to be adequately separated by either distance or primary structure such that a single incident (fire, blast, etc.) would not render both pumping systems inoperable.

(h) In order to isolate a damaged pump/hose from the rest of the sea water system, a suitable isolation valve is to be provided, capable of being operated during or immediately after the incident (fire, blast, etc.) in such a way that the water supply is not interrupted.

13.7 Electrical Installations

13.7.1 General requirement

(a) The electrical apparatus and the wiring system of a classed mobile offshore unit are to be constructed, installed, and tested under the supervision and to the satisfaction of the Surveyor in accordance with the following requirements. Considerations will be given, however, to the arrangements or details of the equipment and machinery which comply with other recognized standards provided they are not less effective than the requirements of this chapter.

(b) Plans and data required for submission to the Society for approval before work commences are to comply with Section 1.2, Part VII of the Rules for steel ships.

(c) The general principle of design for electrical system is to comply with Section 1.3, 1.4, 1.5, 1.6, 1.7, 1.8, 1.9, 1.10, 1.11, 2.1, Part VII of the Rules for steel ships.

13.7.2 The protection of electrical system is to comply with Section 2.2, Part VII of the Rules.

13.7.3 Power and control circuits of steering gear installed in self-propelled mobile offshore units are to comply with Section 2.3, Part VII of the Rules.

13.7.4 Navigation light system is to comply with Section 2.4, Part VII of the Rules.

13.7.5 Internal communication system is to comply with Section 2.5, Part VII of the Rules.

(a) A voice communication system is to be provided between the central jacking control station and a location at each leg in self-elevating units.

13.7.6 Generators are to comply with Chapter 3, Part VII of the Rules.

13.7.7 Motors are to comply with Chapter 4, Part VII of the Rules.

13.7.8 Power and control circuits of jacking system

(a) Jacking gear motor installations are to comply with Chapter 4, Part VII of the Rules and the requirement below.

(i) The capacity of the electric motor shall be sufficient for lifting requirements such as the following:

(1) Lifting the platform with uneven load (but within approved tolerances) for a specific duration

(2) Lifting in preload, if specified, with a specific duration.

(ii) On each leg , two or more motors of any power may be connected to a single branch circuit

(iii) The branch circuit is to be provided with short circuit protection set at not greater than 10 times the sum of the full load currents of the motors.

(b) Control, monitoring and alarm system of jacking system is to comply with the requirement below:

(i) Operation of the jacking system and holding mechanism is to be possible from a central jacking control station. However, operation of a fixation system is to be from a local control station near each leg chord.

(ii) The central jack control station is to be provided with the following alarms and indications :

(1) Audible and visual alarms for:

a) Motor overload, over temperature, or overvoltage for each motor

b) Unit out-of-level(elevated condition)

c) Significant differences in the currents or torque in the motors on one rack

d) Rack phase differential, where applicable to the design

e) Brake fault or overheating

(2) Indication of:

a) Availability of power

b) Current or torque in each motor (during raising and lowering operations)

c) Brake release status

d) Hydraulic pressure

e) Air pressure

f) Pin position

g) Position of yoke

h) Inclination of the unit, in two horizontal , perpendicular axes (elevated condition)

(iii) Upon failure of the jacking system controls in the central control station, emergency controls to operate the jacking system are to be available. An emergency stop is to be provided at the central jacking control station at each jack house. Emergency stop circuits are to be independent from the jacking control circuits. A communication system as defined in 13.7.5(a) is to be provided. Arrangements are to be provided for detecting and correcting rack phase differential, where applicable to the design

(iv) When the jacking systems uses computer-based systems for control and monitoring of jacking operations, such systems are to comply with Section 2.7, Part VIII of the Rules

13.7.9 Switchboards and mounted equipments are to comply with Chapter 5, Part VII of the Rules.

13.7.10 Batteries are to comply with Chapter 6, Part VII of the Rules.

13.7.11 Transformers are to comply with Chapter 7, Part VII of the Rules.

13.7.12 Cables are to comply with Chapter 8, Part VII of the Rules.

13.7.13 Motor controllers are to comply with Chapter 9, Part VII of the Rules.

13.7.14 Accessories and lighting equipments are to comply with Chapter 10, Part VII of the Rules.

13.7.15 Main source and emergency source of electrical power are to comply with Section 11.1, 11.2, 11.4, 11.5, 11.6, 11.7, 11.8 and 11.9, Part VII of the Rules and the following requirement.

(a) The following services are to be comply with Section 11.4.5, Part VII of the Rules
  (i) For a period of 18 hours, emergency lighting:
    (1) At every muster and embarkation station and over the sides instead of 3 hours.
    (2) On helideck, to include perimeter and helideck status lights, wind direction indicators illumination, and related obstruction lights, if any.
    (3) At every location where an abandonment system is deployed or operated and onto the water where personnel leaving the abandonment system will reach the water level.
  (ii) For a period of four days, signaling lights and sound signals required for marking of offshore structures.
  (iii) For a period of 18 hours, permanently installed diving equipment necessary for safe conduct of diving operations, if dependent on the drilling unit's electrical power.
  (iv) For a period of 30 minutes,
    (1) Operation of watertight doors, including their controls and indicators, unless an independent temporary source of stored energy is provided.
    (2) Free-fall lifeboat secondary launching appliance, if the secondary launching appliance is not dependent on gravity, stored mechanical power or other manuals

13.7.16 Additional requirements for electric propulsion equipment are to comply with Chapter 13, Part VII of the Rules.

13.7.17 High voltage installations with voltages above 1kV up to 15kV are to comply with Chapter 14, Part VII of the Rules.

13.7.18 Semiconductor equipments are to comply with Chapter 15, Part VII of the Rules.

13.7.19 Tests after installation on board are to comply with Chapter 16, Part VII of the Rules.

13.7.20 Spare parts are to comply with Chapter 17, Part VII of the Rules.

13.7.21 Automatic or remote control and monitoring systems are to comply with Part VIII of the Rules.

13.8 Fire and Safety

13.8.1 For applicable requirements for Fire and Safety, refer to 1.1.2(e)(ii) of Part IX of the Rules.

Chapter 14

Additional Requirements for General Dry Cargo Ships

14.1 Application

General dry cargo ships intended to carry dry cargo in bulk are to be in compliance with the requirements given in Chapter XII of SOLAS 1974, as amended. If complying with the relevant requirements, the additional service notation **BC-XII** will be assigned, e.g. **"General Dry Cargo Ship, BC-XII..."**.

Chapter 15
Cable Laying Ships or Barges

15.1 General

15.1.1 Application

The requirements in this Chapter apply to ships or barges intended for unrestricted service that are primarily engaged in installation, maintenance and repair of underwater telecommunication cables and power transmission cables.

15.1.2 Classification

Ships or barges built in compliance with the requirements of this Chapter are to be assigned the service notation of Cable Laying, e.g. "**CR 100✠ Cable Laying Ship**..." or " **CR 100 ✠ Cable Laying Barge**...".

15.1.3 The requirements of hull constuction and equipment, machinery installations, piping systems and electrical installations are to be in accordance with Part II, Part IV to Part VIII of the Rules, if applicable. For barges, it is also to comply with requirements specified in Part III Chapter 9 of the Rules.

15.2 Submission of Plans and Data

In general, in addition to the plans listed in other Parts of the Rules, the following plans, calculations and particulars are to be submitted.

15.2.1 Hull plans

The following drawings are to be submitted together with the Trim and Stability Booklet for review.

(a) General arrangement plan, with outboard profile

(b) Capacity plan or table with centers of gravity and free surface values

(c) Lines plan

(d) Tank Sounding Tables, if not included in the Trim and Stability Booklet.

(e) Cross curves of stability, if not included in the Trim and Stability Booklet.

(f) List of down-flooding points, including their transverse, longitudinal and vertical locations, used in the calculation of the intact and damage stability criteria.

(g) Draft Marks Drawing showing the draft mark details, longitudinal locations of marks fore and aft referenced to the forward and after perpendiculars or to the nearest frames and vertical reference points. Navigational draft marks should be based on the ship's lowest vertical projection.

(h) Intact and damage stability calculations supporting the maximum KG or minimum GM curve.

15.2.2 Cable laying plans and data for approval

(a) Hull structural details related to cable laying

(b) Equipment and installations for cable laying

(c) Supporting structures for equipment engaged in the cable laying

(d) Equipment for station-keeping and maneuvering during cable laying

15.2.3 Design analysis

The following calculations are to be submitted and documented.

(a) Calculations demonstrating the adequacy of the sihp's or barge's stability during all cable laying operations. Also see 15.3.1.

(b) Calculations demonstrating adequacy of maneuvering power required for the ship or barge to maintain station during cable laying operations.

(c) Calculations for the supporting structure in way of all cable laying and cable storing equipment interfaces with the ship or barge structure.

(d) Design loads and allowable deflection at each foundation of the cable laying and cable storing equipment

15.2.4 Additional information

The following items are to be submitted:

(a) Arrangement plans showing the locations of all cable laying equipment and control stations.

(b) Support arrangement for equipment used in cable laying operations such as cable drum, cable reels; maximum forces are to be stated.

(c) Location and support details of the cranes; reaction forces are to be stated.

(d) Supporting structures for cable stowed on racks in holds and/or deck; maximum weights are to be stated.

(e) Supporting structures for cable drum and reels in holds and/or deck; maximum weights are to be stated.

(f) Descriptions of equipment for moving skid frames, substructures, including piping and electrical systems, details of mechanical components, including hold-down devices and applicable strength calculations.

15.2.5 Supporting systems

The following items are to be submitted:

(a) Electrical schematics, load analysis, short circuits analysis and coordination study for the ship's electrical systems supplying cable laying.

(b) Piping schematics and calculations for the ship's piping systems supplying cable laying systems.

(c) Arrangement and details of communication systems between the ship and cable laying systems.

15.2.6 Operation manual for ships or barges

For cable laying ships or barges, an operation manual is to be furnished to provide guidance on at least the following items.

(a) Means of identifying that the Manual is for the subject ship or barge, including principle particulars of the ship or barge.

(b) Loading conditions on which the design of the ship or barge has been based.

(c) There should also be evidence of approved loading and stability conditions on board. These should preferably be included in the operation manual. If they form a separate document, they should be referenced in the operation manual.

(d) Maximum approved lifting capacity and load charts of all cranes onboard.

(e) Service limitations, any scope of operations and/or operational limits, as applicable.

(f) Position and application of watertight and weathertight (doors, hatches etc.) closing appliances necessary to meet the Load Line assignment or watertight integrity.

(g) Identification of doors and hatches to be kept closed at sea.

(h) Location of lifesaving appliances

(i) Location of emergency escapes

(j) Anchoring and/or mooring procedures

(k) From the aspect of the Administration, depending on the Administration to which the ship or barge is flagged, there will also be a need for other items to be included such as a safety plan, firefighting procedures, means of escape, evacuation procedures, operation of life saving appliances, and requirements for safe operation of the ship or barge.

15.3 Seakeeping for Cable Laying

15.3.1 Stability

(a) Stability of cable laying ships or barges

(i) In evaluating the loading conditions for cable laying ships or barges, the following loads are to be included:

(1) The overturning moments due to environmental and operational loads on the cable laying devices are to be included. When the cable laying device is movable from stowage to operating condition, the full range of laying device positions is to be considered in order to investigate the most critical scenarios.

(2) The effect of the cable drum and reels in the stability analysis is to be assessed for each operating condition.

(3) If the ship is fitted with or carries open cargo bins on the deck that may accumulate water, either effective means to drain water from these spaces shall be provided or an appropriate free surface correction applied.

(4) Carriage of cable as deck cargo
Where cables are carried on deck, a quantity of trapped water equal to a certain percentage of the net volume of the deck cargo should be assumed in and around the cables. The net volume is to be taken as the internal volume of the cables, plus the volume between the cables. This percentage is to be 30% if the freeboard amidships is equal to or less than 0.015L and 10% if the free board amidships is equal to or greater than 0.03L. For intermediate values of the freeboard amidships, the percentage is to be obtained by linear interpolation. In assessing the quantity of trapped water, the positive or negative sheer aft, actual trim and area of operation may be taken into account.
Where cable is stored on decks located above the freeboard deck, the distance from the freeboard deck to the storage deck is to be added to the freeboard in the above calculation to determine the amount of trapped water.

(5) Where large and heavy equipment or structures are intended to be stowed on deck, the estimated weight and height of the center of gravity in the worst possible scenario are to be considered in the stability analysis.

(b) Cable laying ships equipped with lifting devices in addition to the cable laying device(s) are to comply with Appendix 2 of this Part.

15.3.2 Station keeping

Cable laying ships or barges are to be capable of maintaining their positions safely during cable laying operations. The means to maintain position may be a mooring system with anchors or a dynamic positioning system.

(a) Station keeping with anchors and cables

Position mooring with anchors, cables and mooring winches when used to maintain the ship's position during cable laying operations, are to comply with the requirements for the symbol **POME** or **POMS** (see 13.4 of this Part). Safety precautions are to be considered to prevent damaging seabed equipment and installations by anchor deployment, recovery and station keeping.

(b) Dynamic Positioning System

Dynamic positioning systems, when used to maintain the ship's position during cable laying operations, are to comply with the requirements of Part IV Chapter 10 of the Rules for the class notation **DPS-N**.

15.3.3 Loading conditions

Loading conditions covering departure and arrival in full load as well as ballast conditions, along with anticipated operational or intermediate conditions at site are to be included in the Trim and Stability Booklet of the ship.

15.4 Design and Arrangements of Ships or Barges

15.4.1 General

The weather conditions for cable laying operations are to be clearly defined prior to the beginning of the project. Design parameters of the intended operating and abandonment swell heights, together with associated wind, current speeds and cable pull, are to be used for calculation of the ship's or barge's motions and associated structural loads for the cable laying equipment and its interface with the ship structure.

The working deck is to be strengthened for the specified design loads and an allowance for corrosion, wear and tear is recommended. Uniform deck loadings are to be specified.

The working deck, as far as possible, is to be kept clear of engine room intakes and exhausts. Obstructions from tank vents are to be minimized.

15.4.2 Cranes

Cranes fitted on the ship are to be certified by the Society and are to comply with requirements in the Rules for the Construction and Classification of Cargo Gears (hereinafter referred to as the Cargo Gears Rules).

15.4.3 Supporting structure design loads

(a) Lifting loads

Maximum expected operational loads are to be applied for calculating scantlings of supporting structure of cable laying equipment and cranes. Crane working loads are to consider a dynamic factor according to the Cargo Gears Rules or one specified by the crane manufacturer, if that is greater.

(b) Other loads

Ship structures supporting heavy components of cable laying equipment such as cable drums, reels, and cranes are to be designed considering acceleration loads given below. Acceleration loads need not be combined with normal cable laying or lifting operation loads of cable laying equipment and deck cranes.

$$P_v = 0.102 \times \left(\frac{x - L}{70}\right) W$$
$$P_L = P_T = 0.5W$$

Where:

P_v = Vertical force, in kN.
P_L = Longitudinal force, in kN.
P_T = Transverse force, in kN.
L = Length as defined in 1.2.1 of Part II of the Rules, in m.
W = Supported weight, in kN.

The value of "x" is dependent on the location of the center of gravity of the specific equipment and is to be taken as that given in the table below. The value of "x" at intermediate locations is to be determined by interpolation. L is to be measured from AP to forward.

AP & aft of AP	0.1L	0.2L	0.3L~0.6L	0.7L	0.8L	0.9L	FP & forward
x=18	17	16	15	16	17	18	19

Alternatively, accelerations derived from other recognized standards or direct calculations, model tests considering the most severe environmental conditions the ship is expected to encounter may be considered. The hull structure supporting the stinger is to be strengthened for the maximum design load (also see 15.2.4).

(c) Allowable stresses

Scantlings of structure supporting cable laying equipment and cranes are to be based on the permissible stresses given below:

Normal Stress = 0.7Y
Shear Stress = 0.4Y
Equivalent stress = 0.8Y

Where Y is the specified minimum tensile yield strength or yield point.

Where finite element analysis is used for evaluating the response of supporting structure to design loads in this section, structures supporting cable laying equipment and cranes are to be accepted by the Society.

15.5 Cable Laying Equipment and Systems

15.5.1 General

Unless requested by the owner and exceptions specified in 15.5.3, equipment and systems used solely for cable laying operations are in general not subject to Classification by the Society, provided they are designed and constructed in compliance with an applicable recognized standard. The recognized standard used in design of cable laying equipment and systems is to be specified by designer and accepted by the Society. A manufacturer's affidavit or other acceptable documentation to verify compliance with applicable recognized standards is to be submitted to the Society. Their installations and onboard testing are to be supervised in the aspects of operational safety as to reduce to a minimum any danger to persons on board and marine pollution, due regard to be paid to moving parts, hot surfaces and other hazards. Considerations are to be given to the consequences of the failure of systems and equipment essential to the safety of the ship.

15.5.2 Cable laying systems arrangement

(a) Control system

A central control station is to be provided for controlling or coordinating the operations of the cable laying equipment. The central control station is to be located at a position that allows the operating personnel to have a clear view of the cable departure location and to provide an overview of all systems and activities associated with the cable laying operations.

(b) Communications

The cable laying central control station and the ship or barge station keeping control station are to be linked by a hard-wired communication system and a manually operated alarm system. Means of communications are to be provided between the central control station and the local control stations for the cable laying equipment.

15.5.3 Cable laying equipment and systems

(a) Cable drums, reels, deployment sheaves and support structure

Cable drums and reels are to be designed, constructed and installed in accordance with a recognized standard. Cable drum, reel and deployment sheave support structure including the reinforcements for the hull are to be designed to adequately resist the load effects of pipes, risers or reels imposed on the supports in the severe storm, normal operating and transit conditions with the allowable stresses defined in 15.4.3(c). Considerations should also be given to the unit in damaged conditions, where the cable reel support structure are to withstand the load effects caused by the trim and heel of the ship with the allowable stresses defined in 15.4.3(c).

15.5.4 Offshore Construction Supporting Equipment

(a) Dynamic tracking system

Where the dynamic tracking system for the laid cables interfaces with ship's or barge's data and control networks, provision is to be made to ensure that the operation or reliability of the ship's systems are not degraded.

15.6 Tests, Trials, and Surveys

15.6.1 General

Installation of the cable laying equipment and systems on cable laying ships or barges is to be to the satisfaction of the attending Surveyor. Upon installation, functional integration tests of the cable laying systems on board to the extent and as per the method agreed are to be carried out to the satisfaction of the attending Surveyor.

Position mooring equipment is to be tested in accordance with the specifications of the owner and in the presence of a Surveyor.

Dynamic positioning system is to be tested in accordance with Chapter 10 of Part IV of the Rules.

Chapter 16

Offshore Service Vessels

16.1 General

16.1.1 Introduction

(a) Introduction

This chapter applies to vessels supporting offshore installations including towing and anchor-handling operations and rescue and standby services.

(b) Scope

This chapter gives requirements to hull strength, systems and equipment, safety and availability, and stability including openings and closing appliances and the relevant procedural requirements applicable to offshore service vessels.

In addition, for vessels intended for specific operations, this Chapter gives additional requirements on strength, stability including openings and closing appliances and specific functions relevant for these operations.

(c) Application

The requirements in this Chapter are to be regarded as supplementary to those given in Parts II, IV, V, VI, VII, VIII, IX, XI, and XII.

16.1.2 Class notations

(a) Ship type notations

Assignment of class notations is to be based on compliance with the respective design requirements as stipulated in Table III 16-1 of this Chapter.

(b) Additional notations

The following notations, as specified in Table III 16-2 of this Chapter, are typically applied to offshore service vessels:

(b) Additional notations

The notations specified in Table III 16-2 of this Chapter are typically applied to offshore service vessels.

Table III 16-1
Ship Type Notations and Qualifiers

Ship Type Notation	Description	Qualifier	Additional description	Design requirements, Reference
OSV	Ship intended for supporting offshore installations	[none]		16.1 and 16.2 of this Chapter
		Harsh Weather	Designed for operations in harsh weather conditions	16.1 and 16.2.3 of this Chapter
		Anchor Handling	Equipped to handle subsurface deployment and lifting of anchoring equipment, including handling of floating objects on the surface or on the sea floor	16.1, 16.2 and 16.3 of this Chapter
		Towing	Equipped to handle towing of floating objects in open waters	16.1, 16.2 and 16.3 of this Chapter
		AHT	Multi-purpose offshore service vessels complying with notations **Anchor Handling** and **Towing**	16.1, 16.2 and 16.3 of this Chapter
		Windfarm Maintenance	Equipped for maintenance and service of offshore wind farms	16.1, 16.2 and 16.5 of this Chapter
Standby Vessel	Ship designed to carry out standby and rescue services to offshore installations	[none]		16.1 and 16.4 of this Chapter
		Harsh Weather	Designed specially to operate in harsh weather conditions	16.1 and 16.4.2(b) of this Chapter

Table III 16-2
Additional Notations

Class notation	Description	Application	Rule reference
NAV	Requirements to bridge design, instrumentation, location of equipment and bridge procedures for enhanced safety for maneuvering of the ship	All ships	Part XIII
DPS-N	Vessel equipped with dynamic positioning system This notation (**D**ynamic **P**ositioning **S**ystem),with N being **I**, **II** or **III**, will be assigned to ships provided with dynamic positioning system.	All ships	Part IV Chapter 10
NR	Comfort class covering requirements for noise and vibration and indoor climate	All ships	Part II Chapter 34
Fire-fighting Ship N	Ships intended for fire-fighting operation are to be assigned this class notation, with **N** being **1**, **2** or **3**.	All ships intended for fighting fires on board ships and on offshore and onshore installations	Part III Chapter 12
Damage Stability	Compliance with the damage stability requirements of IMO Res.MSC.235(82) (Guidelines for the Design and Construction of Offshore Supply Vessels, 2006), alternatively as amended by IMO Res. MSC.335(90) (Amendments to the Guidelines for the Design and Construction of Offshore Supply Vessels, 2006)	Offshore service vessels	16.2.5(e) of this Chapter
Helideck-N	This notation (**Heli**copter **deck**), with **N** being **I**, **II, III** or **IV**, will be assigned to ships provided with helicopter facilities in accordance with related requirements.	All ships	Part II Chapter 12A
HLA	Vessel with heavy lift appliance (**HLA**) onboard.	All ships	Rules for the Construction and Survey of Cargo Gear, and Part III Appendix 2
Walk-to-Work	Vessel with offshore gangway system.	All ships	16.5.4(b) of this Chapter

16.1.3 Definitions

(a) Anchor handling winch

Winch used for towing and anchor handling, as described in 16.3.3(c) of this Chapter. The towing and anchor handling functions may be fulfilled by dedicated drums on the winch.

(b) Bollard pull (BP)

The maximum continuous pull obtained from static pull test in sea trial.

(c) Primary supporting member (PSM)

Beam, girder or stringer type member which provides overall structural integrity of the hull envelope and tank boundaries, e.g. double bottom floors and girders, transverse side structure, deck transverses, bulkhead stringers and vertical webs on longitudinal bulkheads.

(d) Shark jaw

Equipment for temporary securement of towline or rig chains at inboard end.

(e) Stern roller

Roller, fairlead, or other equipment at the towline exit on the vessel (irrespective of onboard location), supporting the towline during lifting to avoid chafing and excessive bending, and arranged to facilitate the launch and recovery of rig anchors etc.

(f) Towing pins

Equipment for leading and maintaining the towline along the intended path.

(g) Towing winch

Winch used for towing, as described in 16.3.3(c) of this Chapter.

(h) Towline

Rope or wire used for towing.

16.1.4 Documentation

(a) Documentation requirements

(i) Offshore service vessel

Documentation is to be submitted as stipulated in Table III 16-3 of this Chapter.

(ii) Standby vessel

Documentation is to be submitted as required by Table III 16-4 of this Chapter.

16.1.5 Certification

(a) Certification requirements

Products using for anchor handling and towing, standby vessel and windfarm maintenance are to be certified as required by CR Guidelines for Survey of Products for Marine Use.

16.1.6 Testing

(a) Testing during newbuilding

Testing requirements for class notations **Anchor Handling** and **Towing** are given in 16.3.1(d) of this Chapter, and for **Windfarm Maintenance** in 16.5.2 of this Chapter.

Table III 16-3
Documentation Requirements - Offshore Service Vessel

Object	Documentation type	Additional description	Info
Cargo securing devices, fixed	Structural drawing	Stow racks and their supporting structures	for approval
Qualifier: **Harsh Weather**			
Cargo independent tank	Structural drawing	Including design loads and reaction forces	for approval
Windows	Arrangement plan	Information on type of glass, frames, including references to standards, and deadlights where applicable	for approval
Qualifier: **Damage Stability**			
Damage stability	Preliminary damage stability calculation		for approval
	Final damage stability calculation	Not required in case of approved limit curves, or if approved lightweight data are not less favorable than estimated lightweight data	for approval
Internal watertight integrity plan	Internal watertight integrity plan		for information
Qualifier: **AHT**			
Anchor handling arrangement, towing winch arrangement	Arrangement plan	Including: – towline paths showing extreme sectors and wrap on towing-equipment – towline points of attack – maximum expected BP – maximum design loads for each component – emergency release capabilities.	for information
	Test procedure for quay and sea trial	Bollard pull	for approval
	Report from quay and sea trial	Winch and other equipment required by the class notation	for approval
Anchor handling winch, towing winch	Design criteria Dimensioning criteria, e.g.: – applied loads, static and dynamic – rating with respect to power, temperature, pressure, etc. – environmental conditions.	Including: – RL and the expected maximum BP – hoisting capacity, rendering and braking force of the winch – release capabilities (response time and intended remaining holding force after release).	for information
	Assembly or arrangement drawing A drawing showing how the parts of a mechanical assembly are arranged together		for information
	Detailed drawing		for approval

Object	Documentation type	Additional description	Info
	Design analysis	Strength calculation of the drum with flanges, shafts with couplings, framework and brakes.	for information
	Non-destructive testing (NDT) plan		for approval
Shark jaw, towing pins	Design criteria	Including: – Maximum design load – Emergency release capabilities in operational and dead ship condition.	for information
	Assembly or arrangement drawing		for information
	Detailed drawing	Components transmitting loads	for approval
	Design analysis		for information
	Non-destructive testing (NDT) plan		for approval
Stern roller supporting structure, Shark jaw supporting structure, Towing pin supporting structure	Structural drawing	Including maximum applicable design loads	for approval
Anchor handling supporting structure, Towing winch supporting structure	Structural drawing	Including: – The maximum forces acting on the winches(see 16.3.2(a)) – Foot print loads.	for approval
Qualifier: **Windfarm Maintenance**			
Position keeping systems	Position keeping capability plot		for approval
Work boat davit winch, Work boat davit	Design criteria	Safe working load, heel/trim if applicable, dynamic factor if above 1.5	for information
	Assembly or arrangement drawing		for information
	Detailed drawing	Components transmitting loads	for approval
	Design analysis		for information
	Operation manual		for information
	Installation manual		for information
	Maintenance manual		for information

Table III 16-4
Documentation Requirements - Standby Vessel

Object	Documentation type	Additional description	Info
Stability	Internal watertight integrity plan		for information
	Preliminary damage stability calculation		for approval
	Final damage stability calculation		for approval
Rescue and recovery arrangements	Arrangement plan	Rescue zones including contingency equipment, and accommodation, furnishings and medical equipment for rescued persons and spaces for survivors	for approval
Safety, general	Equipment list	Contingency equipment for standby vessel	for approval
Towing arrangement	Arrangement plan	Including: – towline paths showing extreme sectors and wrap on towing-equipment – towline points of attack – maximum expected BP – maximum design loads for each component – emergency release capabilities.	for information
Towing hook supporting structure, Towing winch supporting structure	Structural drawing	Maximum braking force of winch and breaking strength of towline (if applicable)	for approval
Towing hook	Detailed drawing	Including emergency release mechanism	for approval
Qualifier: **Harsh Weather**			
Windows and side scuttles	Arrangement plan	Including type of glass, frames, references to standards, and deadlights where applicable	for approval

16.2 Offshore Service Vessels

16.2.1 Introduction

(a) Introduction

The Rules provide requirements for vessels intended for offshore services. This also includes operations in harsh weather conditions.

(b) Scope

The Rules include requirements for hull strength, systems and equipment, and stability, including openings and closing appliances, applicable to offshore service vessels.

(c) Application

Vessels complying with the relevant requirements in 16.1 and 16.2 of this Chapter may be given the class notation **OSV**.

If, in addition, the vessel complies with the additional requirements given in 16.2.3 of this Chapter and relevant parts of 16.2.6 of this Chapter, the notation may be extended to **OSV–Harsh Weather**.

Note: The extended notation **OSV–Harsh Weather** is recommended for vessels primarily intended to operate in harsh weather conditions.

If the damage stability requirements in 16.2.5(e) of this Chapter are satisfied in addition to the general requirements in 16.2.5 of this Chapter, then the additional notation **Damage Stability** may be given.

16.2.2 Hull

(a) Loads

(i) Design still water bending moments and shear forces

The still water bending moment and shear force limits in seagoing and in harbour/sheltered water conditions are normally taken as the design still water bending moments and shear forces, as given in 3.2 and 3.3 of Part II. After special considerations, this may also be applicable for ships of length L ≤ 65 m.

(ii) The limits calculated in 16.2.2(a)(i) above may have to be calculated for extreme non-homogeneous loading conditions after special consideration of tank arrangement and cargo deck loading.

(iii) If the calculated bending moments and shear forces in 16.2.2(a)(ii) above exceed the design values given in 16.2.2(a)(i) above, the calculated values are to be applied in the hull girder scantling check.

(b) Hull local scantling

(i) Yield check of plating and stiffeners

General reference is given to Chapters 6A and 7 of Part II for prescriptive requirements to stiffeners and plating respectively. For wheel loading from cargo handling/transporting vehicles, reference is given to Chapter 6 of this Part.

Additional hull local scantling requirements for offshore service vessels are given in 16.2.2(c) to 16.2.2(f) as below.

(c) Ship's sides and stern

(i) Longitudinal steel fenders are to be fitted on the ship's sides at freeboard cargo deck and the second deck above. The fenders are not to extend less than 0.02L forward of the section where the deck has its full breadth.

Additional steel fenders are to be arranged aslope between the longitudinal steel fenders. The steel fenders may be omitted if the side shell scantlings are increased as specified in 16.2.2(c)(ii) as below.

(ii) The net thickness, in mm, of side plating, including bilge strake, up to the second deck above the freeboard deck, is not to to be less than:

$$t = \max\left((4.5 + 0.05L_{90})\frac{b}{s_s}\sqrt{K};\ 7.0\right)$$

where:

s_s = Standard frame spacing in m

= 0.48 + 0.002 L

= Maximum 0.61 m forward of the collision bulkhead and aft of the after peak bulkhead

b = Width of face plate of stiffeners and primary supporting members, in mm

$b / s_s \geq$ 1.0

L_{90} = Length of ship, L, as specified in 1.2.1 of Part II, but need not be taken greater than 90 m.

K = Material factor as specified in 1.5.2(a) of Part II.

Requirements given for side plating in Chapter 7 of Part II are to be complied with as applicable.

In way of fender area, as described in 16.2.2(c)(i) above, steel fenders can be omitted when the side plate thickness is at least twice that required above, for a breadth not less than 0.01L, along the level of the freeboard deck and at the second deck above.

(iii) The net section modulus, in cm^3, of transverse stiffeners or side longitudinals is not in any region to be less than:

$$Z_1 = 1.15Z$$

where *Z* is the required net section modulus, in cm^3, as given in Chapters 6A and 12 of Part II.

All stiffeners up to the second deck above the freeboard deck, and forward of 0.2L from the forward perpendicular up to the forecastle deck, are to have end connections with brackets.

(iv) Non-continuous welds are not to be used in connections between stiffeners and shell plating.

(d) Weather deck for cargo

(i) The deck is to have scantlings based on a minimum cargo load of 1.5 t/m^2, in combination with 80% of the design sea pressure, as specified for the classification. The design cargo load, in t/m^2, will be given in the appendix to the classification certificate. Cargo loads exceeding 4 t/m^2 need not be combined with sea pressure. For intermediate loads, the percentage of the design sea pressure to be added is to be varied linearly.

(ii) Net deck plating thickness is not to be less than 7.0 mm.

(iii) In deck areas for heavy cargo units, e.g. anchors, the deck structure is to be strengthened against the maximum expected anchor weight.

(iv) Protection of air pipes, valves, smaller hatches etc. is to be in accordance with 2.13.1(e)(i) of Part VI.

(v) Scantlings of flush hatch covers in the cargo deck areas are generally to be based on the same load as the adjacent deck. In the case that the flush hatch cover is designed for a different load, this is to be stated in the appendix to the classification certificate.

(e) Stow racks

(i) Stow racks for pipes as deck cargo are to be provided as required. The stow racks are to be efficiently attached and supported at deck.

The scantling of the stow racks is to be designed for a transverse load, taking into account a deck load, in kN, of not less than six times total deck area between the stow racks, evenly distributed on one side of the vessel. In addition, the stow racks are to withstand the deck load, at a heel angle of 30 degrees, assumed to be evenly distributed on one side of the vessel.

(ii) Allowable stresses

Acceptable stresses, in N/mm^2, for the stow rack scantlings and respective supporting structure resulting from bending moments and shearing forces for the load given above are to be calculated in accordance with acceptance criteria AC-SD, i.e. for static plus dynamic (S+D) design load combinations, in CSR-H Pt. 1 Ch. 6 Sec. 6 [3].

For direct strength calculations, the equivalent von Mises stress (σ_{vm}), in N/mm^2, is to satisfy:

$$\sigma_{vm} \leq 0.9R_{eH}$$

Where:

R_{eH} = Specified minimum yield stress specified in Table XI 3-9 or Table XI 3-10 of Part XI, in N/mm^2

(f) Primary supporting members (PSM)

(i) Direct strength analysis

The strength of primary structural members that form part of a grillage system, such as deck girders, side web frames, pillars, floors and girders in double bottom may be determined by using direct strength analysis, i.e. by use of beam analysis, as described in 16.2.2(f)(ii) as below.

PSM are to be evaluated in accordance with CSR-H Pt. 1 Ch. 6 Sec. 6 [3].

(ii) Beam analysis

Beam analysis will, in general, be accepted to evaluate bending and shear stresses in webs and flanges of grillage structure under lateral loads, such as decks, double bottom and side structure under cargo or liquid pressure, e.g. sea and tank pressures. The effective plate breadth in bending of the primary strength members is to be calculated according to CSR-H Pt. 1 Ch. 3 Sec. 7 [1.3]

(iii) Design loads

The design loads as intended for direct analysis are to be provided by the ship owner, ship designer, or shipyard and accepted by the Society.

(iv) Allowable stresses

See CSR-H Pt.1 Ch.6 Sec.6 [3.3].

(v) Buckling check of plate panels based on beam analysis

The normal stresses and shear stresses taken from the strength assessment in 16.2.2(f)(ii) above are subject to buckling capacity calculation of plate panels as given in CSR-H Pt. 1 Ch. 8 Sec. 4, and the stresses are to be corrected as per CSR-H Pt.1 Ch. 8 Sec.5 [2.2.7].

(vi) Maximum flange area of primary supporting member

The effective flange area of primary supporting member is to satisfy the following:

$$b_f\, t_f \leq b_{eff}\, t_p \frac{R_{eH,p}}{R_{eH,f}}$$

where:

b_f	=	Face plate/flange width of stiffener or PSM, in mm
t_f	=	Face plate/flange net thickness of stiffener or PSM, in mm
b_{eff}	=	Effective breadth of attached plating, as defined in CSR-H Pt.1 Ch.3 Sec.7 [1.3.2], in m
t_p	=	Net thickness of the plating attached to a stiffener or a PSM, in mm
$R_{eH,p}$	=	Minimum specified yield stress of the material of the plate, in N/mm^2.
$R_{eH,f}$	=	Minimum specified yield stress of the material of the flange, in N/mm^2.

(vii) Yield and buckling criteria for finite element analysis

When finite element analysis is used for analysis of PSM then all significant stress components are to be considered, to a similar extent as for partial ship finite element models described in CSR-H Pt.1 Ch.7 Sec.3. The strength is to satisfy the yield criteria given in CSR-H Pt.1 Ch.7 Sec.3 and buckling criteria given in CSR-H Pt.1 Ch.8 Sec.4.

16.2.3 Hull local scantling for ships assigned class notation **OSV–Harsh Weather**.

(a) Ship's sides and stern

(i) Where subjected to heavy loads when handling anchors for offshore floating units, the stern is to be adequately strengthened. The net plate thickness, in mm, adjacent to the stern roller and shark jaw is not to be less than:

$$t = 8 + 0.2L$$

The deck adjacent to the stern is to be strengthened accordingly. The requirement may be modified if a substantial sheathing is fitted on the deck.

(ii) The net thickness of the side plating up to the forecastle deck is not to be less than that given in 16.2.2(c)(ii) of this Chapter.

(iii) The net section modulus, in cm^3, of transverse stiffeners or side longitudinals up to the second deck above the freeboard deck is not to be less than:

$$Z_1 = 0.0014\ L_{90}\ l_e\ s\ K$$

or, if steel fenders are omitted:

$$Z_1 = 0.0023\ L_{90}\ l_e\ s\ K$$

The net section modulus, in cm^3, of transverse stiffeners or side longitudinals is to, however, not in any region be taken less than:

$$Z_{min} = 1.25Z$$

where:

Z	=	Required net section modulus, in cm^3, as given in Chapters 6A and 12 of Part II.
L_{90}	=	Length of ship as specified in 1.2.1 of Part II, but need not be taken greater than 90 m.
l_e	=	Effective bending span of stiffener, in m, as defined in CSR-H Pt.1 Ch.3 Sec.7 [1.1.2], where the notation l_{bdg} is employed
s	=	Stiffener spacing in mm, as defined in CSR-H Pt.1 Ch.3 Sec.7 [1.2.1]
K	=	Material factor as specified in 1.5.2(a) of Part II

The requirement for Z_1 given above refers to the ship's sides, which have an inclination to the vertical (along the ship's depth) less than 15°. For greater inclinations, the requirement given for Z_{min} is to be applied.

All stiffeners up to the second deck above the freeboard deck, and stiffeners forward of 0.2L from F.E. up to forecastle deck, are to have end connections with brackets.

(iv) Non-continuous welds are not to be used in connections between stiffeners and shell plating up to the second deck above the freeboard deck.

(v) In the ship sides up to the second deck above the freeboard deck, the net gross section modulus, in cm^3, of PSM is not to be less than:

$$Z_2 = 1.4L_{90}\ l_e\ K$$

or, if steel fenders are omitted:

$$Z_2 = 2.3L_{90}\ l_e\ K$$

where L_{90} and K are as given in 16.2.3(a)(iii) of this Chapter; l_e as defined in CSR-H Pt.1 Ch.3 Sec.7 [1.1.6]

Additionally, the gross section modulus, in cm^3, of PSM is not to be less than:

$$Z_{min} = 1.25\ Z$$

where Z is the required section modulus, as given in CSR-H Pt.1 Ch.6 Sec.6 [3].

The PSM are assumed to have substantial connections at both ends.

(b) Bulwark

The bulwark gross plate thickness is not to be less than 7 mm. Bulwark stays are to have a depth not less than 350 mm at deck. Stays are to be fitted on every second frame. Open rails are to have ample scantlings and efficient supports.

(c) Support of heavy components

(i) General

PSM supporting deck cargo and equipment, foundations for separate cargo tanks, as well as supports of other heavy components, are to have scantlings based on the supported mass, forces due to the ship motions, and reaction forces at supports of deck machinery.

(ii) Strength analysis of primary supporting members

Strength analysis of PSM may follow the principles given in 16.2.2(f) of this Chapter.

(iii) Pressure due to distributed deck load

The total pressure P_{dl}, in kN/m^2, for the static plus dynamic (S+D) design load scenarios applied for strength analysis of PSM are to be in accordance with CSR-H Pt.1 Ch.4 Sec.5 [2.3.1].

For vessels with L < 100 m, the total pressure P_{dl}, in kN/m^2, for the static plus dynamic (S+D) design load scenarios applied for strength analysis of PSM may be based on the simplified calculation as follows:

- aft of 0.2L from A.E. and forward of 0.2L from F.E:

  $P_{dl} = 20q$
- amidships within 0.4 L:

  $P_{dl} = 16q$
- between specified regions, P_{dl} is to be varied linearly.

  where q is the specified distributed deck load, in t/m^2.

(iv) Concentrated forces due to unit load

The force F_U, in kN, due to the loads described in 16.2.3(c)(i) of this Chapter for the static plus dynamic (S+D) design load scenarios, is to be in accordance with CSR-H Pt.1 Ch.4 Sec.5 [2.3.2].

(v) Allowable stresses

Acceptable stresses, in N/mm^2, for the supporting structure, resulting from bending moments and shearing forces calculated for the load given above, are to be in accordance with acceptance criteria AC-S given in CSR-H Pt. 1 Ch. 6 Sec. 6 [3.2] or [3.3], depending on the calculation method used.

For direct strength calculations, the equivalent von Mises stress (σ_{vm}), in N/mm^2, is to satisfy:

$$\sigma_{vm} \leq 0.9R_{eH}$$

where:

R_{eH} = Specified minimum yield stress specified in Table XI 3-9 or Table XI 3-10 of Part XI, in N/mm^2

(d) Deckhouses and superstructures

(i) The net section modulus, in cm^3, of stiffeners and beams not contributing to longitudinal strength is not to be less than:

$$Z = \frac{f_u |P| s\, l_e^2}{f_e C_s R_{eH}}$$

where:

P = Design pressure in kN/m^2

= P_D for exposed decks

= $Max(P_{SI} ; P_W)$ for exposed superstructure side

= P_A for exposed end bulkheads and deckhouse boundaries

= Min. 10 kN/m^2 for weather decks

= Min. 5 kN/m^2 for top of the wheelhouse

= 8 kN/m^2 for accommodation decks, aft of 0.2L from A.E. and forward of 0.2L from F.E.

= 6.5 kN/m^2 elsewhere

P_D = Design sea pressure, in kN/m^2, as given in CSR-H Pt.1 Ch.4 Sec.5 [2] and Pt.1 Ch.4 Sec.5 [4.2], as applicable

P_{SI} = Design sea pressure, in kN/m^2, for superstructure side, as given in CSR-H Pt.1 Ch.4 Sec.5 [4.3]

P_W = Wave pressure, in kN/m^2, for superstructure side, as given in CSR-H Pt.1 Ch.4 Sec.5 [1.3]

P_A = Design sea pressure, in kN/m^2, for end bulkheads of superstructure and deckhouse boundaries, as given in CSR-H Pt.1 Ch.4 Sec.5 [4.4]

f_e = Bending moment factor as defined in CSR-H Pt.1 Ch.6 Sec.6 Table 2, where the notation f_{bdg} is employed. For stiffeners with end fixity deviating from the ones included in CSR-H Pt.1 Ch.6 Sec.6 Table 2, with complex load pattern, or being part of a grillage, the requirement in CSR-H Pt.1 Ch.6 Sec.5 [1.2] applies.

f_u = Factor for unsymmetrical profiles, to be taken as:

= 1.00 for flat bars and symmetrical profiles (T-profiles)

= 1.03 for bulb profiles

= 1.15 for unsymmetrical profiles (L-profiles)

C_S = permissible bending stress coefficient, taken as:

C_S = 0.75 for acceptance criteria set AC-SD.

R_{eH} = Specified minimum yield stress specified in Table XI 3-9 or Table XI 3-10 of Part XI, in N/mm^2

(ii) Stiffeners are to have effective end connections, i.e. with brackets or welded webs. Stiffeners on lower front bulkhead on weather deck forward are to have brackets at the lower ends.

(iii) The net plate thickness, in mm, in superstructures and deckhouses is not to be less than:

$$t = (t_0 + 0.02L)c\sqrt{K}$$

where:

t_0 = 4.5 mm for front bulkheads and weather deck forward of the lowest tier of the front bulkhead

= 3.5 mm for sides and aft end bulkheads and weather decks elsewhere

= 3.0 mm for superstructure and deckhouse decks (in way of accommodation).

c = Coefficient taken as:

$c = \max(b/650;1.0)$

K = Material factor as specified in 1.5.2(a) of Part II.

(e) Loading conditions

(i) The following loading conditions are to be presented:

- vessel in fully loaded departure condition with cargo distributed below deck and with deck cargo specified by position and weight, with full stores and fuel, corresponding to the worst service condition in which all stability criteria are met
- vessel in fully loaded arrival condition with cargo as specified, but with 10% stores and fuel
- vessel in ballast departure condition, without cargo but with full stores and fuel
- vessel in ballast arrival condition, without cargo but with 10% stores and fuel
- vessel in the worst anticipated operating condition
- if the vessel is equipped with towing gear, vessel in a typical condition ready for towing.

(ii) Assumptions for calculating loading conditions:

- if a vessel is fitted with cargo tanks, the fully loaded conditions, as described in 16.2.3(e)(i) above, are to be modified, assuming first the cargo tanks full and then the cargo tanks empty
- in all cases when deck cargo is carried, a realistic stowage weight is to be assumed and stated in the stability information, including the height of the cargo and its centre of gravity
- where pipes are carried on deck, a quantity of trapped water equal to a certain percentage of the net volume of the pipe deck cargo is to be assumed in and around the pipes. The net volume is to be taken as the internal volume of the pipes plus the volume between the pipes. This percentage is to be 30 if the freeboard amidships is equal to or less than 0.015 L_f and 10 if the freeboard amidships is equal to or greater than 0.03 L_f. For intermediate values of the freeboard amidships, the percentage may be obtained by linear interpolation.

16.2.4 Systems and equipment

(a) Steering gear

The steering gear is to be capable of bringing the rudder from 35° on one side to 30° on the other side in 20 s, when the vessel is running ahead at maximum service speed.

(b) Exhaust outlets

Exhaust outlets from diesel engines are to have spark arrestors.

(c) Anchoring equipment

For vessels without means for dynamic positioning, but intended for anchoring close to offshore installations, safety precautions are to be considered.

Note: Safety precautions may consist of increasing the diameter and length of the chain cables above the minimum requirements given in Table II 25-1 of Part II or Table XV 25-1 of Part XV. For operation in harsh weather conditions, it is recommended to have the diameter of chain cables based on an equipment letter at least two steps higher than the corresponding vessel's equipment number and length of the chain cables 85% greater than the table value corresponding to the increased diameter.

16.2.5 Stability

(a) Stability manual

(i) The requirements given in this sub-section are applicable to vessels with a freeboard length L_f of 24 m and above.

(ii) The stability manual is to contain the following information:

- report on inclining test and determination of light ship data
- capacities and centres of gravity of all tanks and spaces intended for cargo and consumables
- free surface particulars for all tanks
- information on types, weights, centres of gravity and distribution of deck cargoes that can be carried within the limits set out in Chapter 30 of Part II. Possible restrictions, such as plugging of pipes, are to be clearly stated

- where applicable, instructions related to the vessel when towing are to be included
- hydrostatic data
- cross curves of stability
- loading conditions, including righting lever curves and calculation of metacentric height GM including free surface corrections
- curves for limiting VCG (centre of gravity above keel) or GM values for intact conditions and a curve showing the permissible area of operation.
- stillwater bending moment and shear force limit curves.

(b) Loading conditions

For loading conditions see 16.2.3(e) of this Chapter.

(c) Icing

If the vessel is intended to operate in zones where icing is expected, this is to be included in the calculation of the stability. The vessel is, in any service condition, to satisfy the stability criteria set out in Chapters 30 and 30A of Part II, including the additional weight imposed by the ice. Weight distribution is to be taken as at least 30 kg/m^2 for exposed weather decks, passageways and fronts of superstructures and deckhouses, and at least 7.5 kg/m^2 for projected lateral planes on both sides of the vessel above the waterline. The weight distribution of ice on appurtenances such as railings, rigging, posts, and equipment is to be included by increasing the total area for the projected lateral plane of the vessel's sides by 5%. The static moment of this area is to be increased by 10%.

(d) Intact stability

(i) The freeboard at the stern in the upright condition is not to be less than 0.005 L_f in any loading condition.

(ii) In addition to the stability criteria for classification, the vessel is to comply with the requirements in 11.8 and 11A.4 of this Part for all towing conditions.

(e) Damage stability for ships assigned class notation **OSV–DS**

(i) The damage stability calculations are to contain GM or VCG limit curves for damage conditions showing the permissible area of operation

(ii) The vessel is to comply with the damage stability requirements of IMO Res. MSC.235(82) (Guidelines for the Design and Construction of Offshore Supply Vessels, 2006), alternatively as amended by IMO Res. MSC.335(90) (Amendments to the Guidelines for the Design and Construction of Offshore Supply Vessels, 2006).

16.2.6 Openings and closing appliances

(a) Weathertight doors

(i) Where necessary, an arrangement for protecting the doors against deck cargo is to be provided.

(ii) Scuttles or windows fitted in weathertight doors are to comply with 13.3 of Part II.

(iii) For ships assigned the class notation **OSV–Harsh Weather**, the arrangements and sill heights of weathertight doors are in general to comply with 17.4.2 of Part II. Unprotected doors in exposed positions on a weather deck for cargo are to be made of steel.

(iv) For ships assigned the class notation **OSV–Harsh Weather**, the requirements to sill heights of doors located in exposed positions in sides and front bulkheads apply one deck higher than given by 17.4.2 of Part II.

(v) For ships assigned the class notation **OSV–Harsh Weather**, doorways to the engine room and other compartments below the weather deck are, as far as is practicable, to be located at a deck above the weather deck. Alternatively, two weathertight doors in series may be accepted.

(vi) For ships assigned the class notation **OSV–Harsh Weather**, scuttles or windows fitted in weathertight doors are to comply with 16.2.6(c) as below.

(b) Freeing ports and scuppers

The area of the freeing ports in the side bulwarks on the cargo deck is at least to meet the requirements of 13.2 of Part II.

The disposition of the freeing ports is to be carefully considered to ensure the most effective drainage of water trapped in pipe deck cargoes and in recesses at the after end of the forecastle. In such recesses appropriate scuppers with discharge pipes led overboard may be required.

If an emergency exit is located in a recess, freeing ports should be located nearby.

(c) Windows and side scuttles for ships assigned class notation **OSV–Harsh Weather**

(i) Typical arrangements complying with the requirements given below are shown in Fig. III 16-1 and Fig. III 16-2 as below. Side scuttles will not be accepted in the ship's sides below third tier forward of 0.1 L_f from forward perpendicular unless upon special consideration with respect to strength and position.

(ii) In the after end bulkhead of deckhouses and superstructures, in sides of deckhouses and of superstructures that are not part of the shell plating, windows will be accepted in the second tier above the freeboard deck and higher. In the front bulkheads of deckhouses and superstructures, windows will be accepted in third tier above the freeboard deck and higher. In the front bulkheads of deckhouses and superstructures, windows will be accepted in third tier above the freeboard deck and higher. In the first tier of the front bulkhead above the weather deck (forecastle deck), only side scuttles will be accepted.

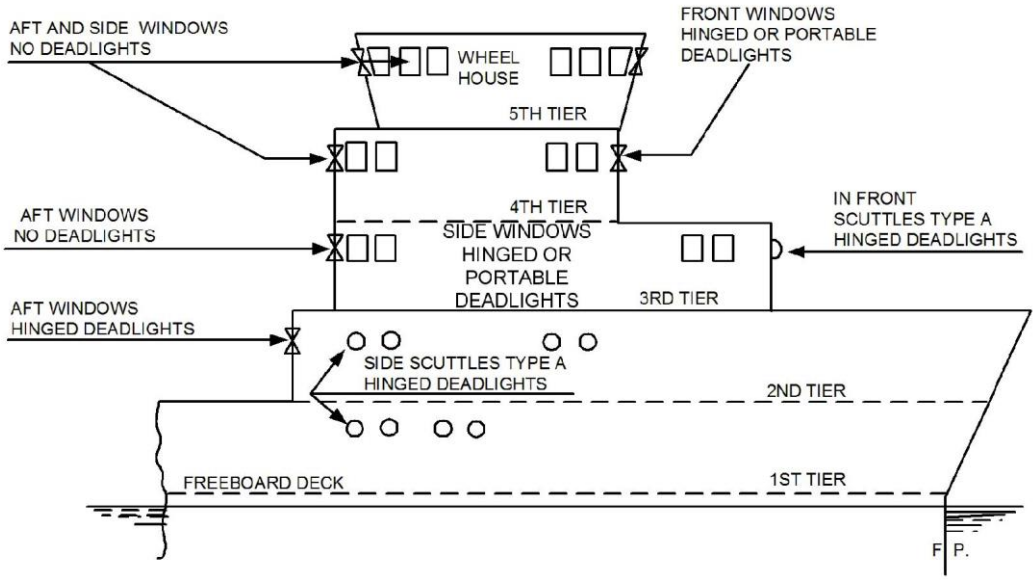

Fig. III 16-1
Side Scuttles and Windows in Offshore Service Vessel with Complete Superstructure and Uppermost Forecastle

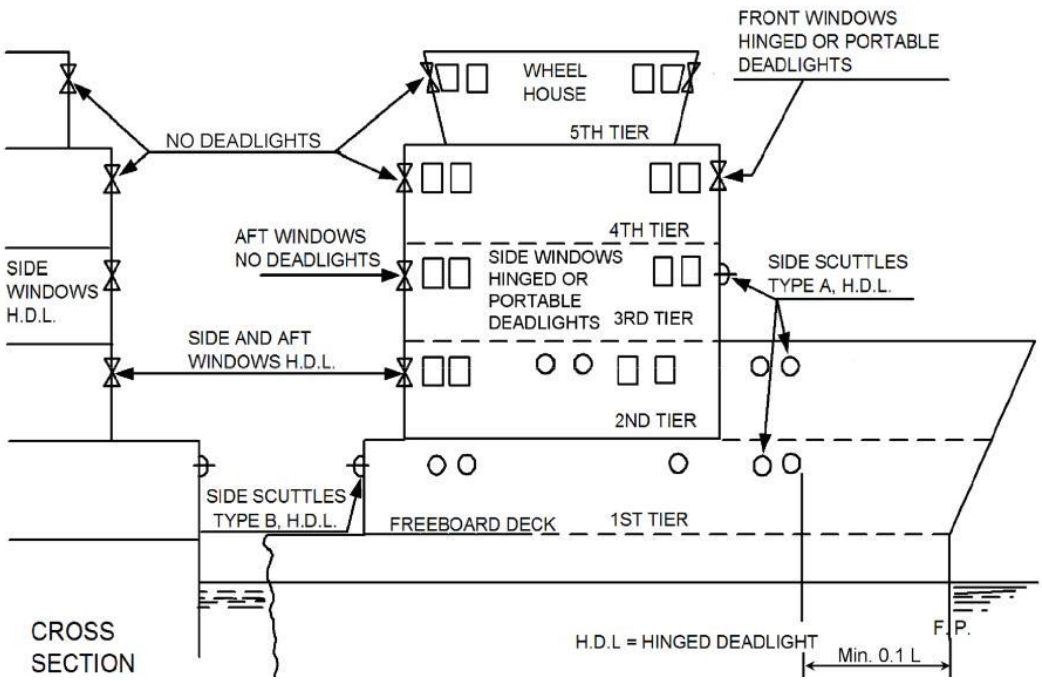

Fig. III 16-2
Side Scuttles and Windows in Offshore Service Vessel with Forecastle only

(iii) Hinged deadlights are to be fitted to:

- side scuttles in the vessel's hull, i.e. shell plating
- windows and side scuttles in the sides of deckhouses and superstructures up to and including the third tier above the freeboard deck
- all windows and side scuttles in front bulkheads of superstructures and deckhouses
- windows and side scuttles in the after end of bulkheads of superstructures and deckhouses, casings and companionways in the first and second tier above the freeboard deck
- windows and side scuttles in all bulkheads of the first tier on the weather deck.

(iv) Deadlights fitted in the side of the third tier may be portable if they are stored nearby.

For the fourth tier and above, unless it is the first tier above the forward weather deck, the deadlights may be portable if they are stored nearby.

In the second tier above the freeboard deck and higher, deadlights on windows may be arranged externally, provided there is easy and safe access for closing.

Other deadlights are to be internally hinged.

(v) Deadlights are to be available for each type of window sited on the front of a wheelhouse that is located on the forward part of the vessel, unless the wheelhouse is located on the fifth tier (or higher) and is at least two decks above the forward weather deck. For externally fitted deadlights, an arrangement for easy and safe access is to be provided (e.g. gangway with railing). The deadlights of portable type are to be stowed adjacent to the window for quick mounting. For the wheelhouse front windows, at least two deadlights are to have means for providing a clear view.

(vi) The strength of side scuttles with internally hinged deadlights and toughened glass panes are to comply with International Standard ISO 1751 as follows:

Type A (heavy): In the hull, in the sides of superstructures, and in the front of superstructures and deckhouses (weather deck tier).

Type B (medium): In the after end of superstructures and in the sides and ends of deckhouses (except front in weather deck tier).

(vii) Windows are to have toughened safety glass panes of thickness, in mm, not less than:

$$t = \frac{b}{S}\sqrt{P\beta}$$

where:

b = Smaller dimension of the glass pane, in mm

S = Safety factor obtained from the Table III 16-5 of this Chapter

P = Local sea pressure, as given in 16.2.3(d)(i) of this Chapter, in kN/m^2.

β = Factor obtained from the Fig. III 16-3 of this Chapter

Furthermore, the thickness of windows should not be taken less than 10 mm.

When laminated glass panes are used, equivalent thickness according to formula given below is to be applied.

$$t_e = \sqrt{\frac{\sum_{i=1}^{n} t_i^3}{t_{max}}} \geq t_r$$

where:

n = Number of laminated layers

t_i = Thickness of each glass pane layer in the laminate in mm

t_{max} = The largest thickness of the n panes in mm

t_e = Equivalent thickness of laminated toughened safety glass in mm

The minimum thickness however for any glass pane layer is not to be less than 4 mm.

Table III 16-5
Safety Factor (S)

Window and tier	2nd	3rd	4th and above
Front or side	100	100	150
Aft	100	150	200

Fig. III 16-3
Curve for Factor β Based on Window Size Ratio

(viii) Windows of design not in accordance with recognised international standards are to be approved by the Society on a case-by-case basis. Drawings showing details of the frame design, its fixation, and material specification are to be submitted for approval.

(ix) For large windows with the lower edge positioned at or less than 900 mm above the deck, provision of handrails at a level approximately 1 m above the deck is to be considered when applicable.

16.3 Anchor-Handling and Towing Vessels

16.3.1 Introduction

(a) Introduction

The requirements in this section apply to vessels intended for anchor handling and towing operations offshore.

Anchor handling operations implies towing of floating objects in open waters and objects on sea bed in addition to subsurface deployment and lifting of anchoring equipment.

Towing operations implies towing of floating objects in open waters.

(b) Scope

The following is covered by this section:

- design and testing requirements to towing and anchor handling equipment
- hull arrangement and supporting structure
- stability and watertight integrity.

Basic requirements for anchor handling and towing vessels are given in 16.1 and 16.2 of this Chapter.

(c) Application

Vessels intended for anchor handling operations, and built in compliance with class notation **OSV** together with the requirements in this section, may be given the class notation qualifier **Anchor Handling**.

Vessels intended for towing operations, and built in compliance with class notation **OSV** together with the requirements in this section, may be given the class notation qualifier **Towing**.

(d) Testing requirements

(i) The winch and other equipment made mandatory in this section are to be function tested according to approved procedures in order to verify:

- the ability of the arrangement and equipment to operate within the limitations, towline paths, towline sectors etc. specified by the arrangement drawing
- the correct function of the normal operation modes
- the correct function of the emergency operation modes, including emergency release and dead ship operations.

(ii) The winch is to be load tested during hoisting, braking, and pay out. Design loads to be applied. However, a maximum load equal to BP may be accepted if the winch is not of novel design or complex structure.

(iii) The BP testing is to comply with applicable requirements in 11.9 of this Part.

16.3.2 Hull

(a) Deck structure

(i) Scantlings of foundations and supports of towing pins are to be based on 2 times the specified maximum static working load specified by the designer.

(ii) Scantlings of foundations and supports of winches intended for towing functions are to be based on minimum 2.2 times the maximum BP of the vessel.

(iii) Scantlings of foundations and supports of winches intended for anchor handling functions are to be based on 1.5 times the specified maximum hoisting capacity or the maximum brake holding capacity of the winch, whichever is greater.

(iv) Scantlings of foundations and supports of stern rollers are to be based on 2 times the maximum static working load as specified by the designer or 2 times the specified maximum hoisting capacity of the anchor handling winch, whichever is greater.

(v) Scantlings of foundations and supports of shark jaws are to be based on 2 times the maximum static working load as specified by the designer.

(vi) Acceptable stresses, in N/mm^2, for the scantlings of the supporting structure resulting from bending moment M, in kNm, and shear force Q, in kN, calculated for the load given above are:

σ_b = Bending stress, in N/mm^2, taken as:

$$\sigma_b = \frac{1000\ M}{Z}$$

$$\sigma_b \leq 0.9R_{eH}$$

τ = Average shear stress, in N/mm^2, taken as:

$$\tau = \frac{10Q}{A_{shr}}$$

$$\tau \leq 0.9\ R_{eH}\ /\sqrt{3}$$

where:

Z = Net section modulus, in cm^3

A_{shr} = Net shear area, in cm^2.

R_{eH} = Specified minimum yield stress specified in Table XI 3-9 or Table XI 3-10 of Part XI, in N/mm^2

For direct strength calculations, the equivalent von Mises stress, in N/mm^2, is to satisfy:

$\sigma_{vm} \leq 0.9R_{eH}$

(b) Ship's sides and stern

Where subjected to heavy loads when handling anchors, the stern and the flat part of the bottom in way of the stern are to be adequately strengthened. The net plate thickness is not to be less than twice the basic requirement given in 16.2.2(c)(ii) of this Chapter. The deck adjacent to the stern is to be strengthened accordingly. If a substantial sheathing is fitted on the deck, the requirement may be modified.

16.3.3 Systems and equipment

(a) General

(i) The equipment is to meet the requirements in this section. Alternatively, equipment complying with a recognized standard may be accepted upon special considerations, provided said standard gives a reasonable equivalence to the requirements of this section and fulfils the intention.

(ii) Arrangement drawing for anchor handling and towing, with the content listed under documentation requirement in this section, is to be posted on the bridge.

(iii) Structural elements, e.g. cargo rails, bulwarks, etc., that may support the towline during normal operation, are to have a radius of bend sufficient to avoid damage to the towline.

(iv) The arrangement is to be such that the heeling moment arising when the towline is running in the athwartship direction, will be as small as possible.

(v) Vessels with class notation qualifier **Anchor Handling** are to be fitted with the following items:

- anchor handling winch
- shark jaw
- towing pins
- stern roller.

(vi) Vessels with class notation qualifier **Towing** are to be fitted with the following items:

- towing winch or towing hook.

(vii) If a vessel with qualifier **Towing** is fitted with towing pins and/or shark jaws, these are to be certified as specified in CR Guidelines for Survey of Products for Marine Use.

(viii) The arrangement is to be such that the towline is led to the winch drum in a controlled manner under all foreseeable conditions (directions of the towline) and provides proper spooling on the drum.

(b) Materials for equipment

(i) Shark jaws and towing pins with attachments are to be made of rolled, forged or cast steel in accordance with Part XI.

(ii) For anchor handling and towing, winch materials are to comply with relevant specifications given in Part XI.

(iii) For forged and cast steel with minimum specified tensile strength R_m above 650 N/mm^2, specifications of chemical composition and mechanical properties are to be submitted for approval for the equipment in question.

(iv) Plate material in welded parts is to be of the grades as given in Table III 16-6 as below.

Table III 16-6
Plate Material Grades

Thickness in mm	Normal strength structural steel	High strength structural steel
$t \leq 20$	A	AH
$20 < t \leq 25$	B	AH
$25 < t \leq 40$	D	DH
$40 < t \leq 150$ (1)	E	EH

Note:
(1) For plates above 40 mm joined with fillet-/partly penetration welds, grade D and DH will normally be accepted

(v) When R_{eH} is greater than 80% of R_m, calculations for structural strength, as given in 16.3.3(c) as below, are to be based on the following value for R_{eH}:

$$R_{eH} = \min(R_{eH}\,;\,0.8R_m)$$

(vi) Fabrication of shark jaws and towing pins is to be in accordance with Part XI and Part XII, or a standard recognised by the Society.

(c) Anchor handling and towing winch

(i) Control system

The control stands are to provide a safe and logical interface for the operator with operating levers returning to stop position when released, and, in addition, providing a clear view to the drums.

The anchor handling winch is to be capable of controlled operation during lowering and hoisting of anchors, both submerged and over the stern roller.

(ii) Monitoring system

Devices for measuring tension in tow ropes should be fitted.

(iii) Emergency release

The winch is to be designed to allow drum release in an emergency, and in all operational modes.

The release capabilities are to be as specified on arrangement drawing as required in 16.3.3(a)(ii) of this Chapter.

The action to release the drum is to be from a position at the bridge with full view and control of the operation. Identical means of equipment for the release operation are to be used on all release stations.

After an emergency release, the winch brake is to be in normal function without delay.

It is to always be possible to carry out the emergency release sequence (emergency release and/or application of brake), even during a black-out.

Control handles, buttons etc. for emergency release are to be protected against unintentional operation.

(iv) Structural strength of winch for anchor handling function

The winch for anchor handling function is to be capable of withstanding the maximum forces from hoisting, rendering and braking, including dynamic effects, without exceeding the following stress levels:

- hoisting including dynamic effect at relevant layer: $0.67R_{eH}$
- braking at relevant layer as specified in 16.3.3(c)(x) as below: $0.67R_{eH}$
- rendering load/load in towline when drum starts to rotate in the opposite direction of the applied driving torque: $0.85\ R_{eH}$.

Buckling and fatigue are to be considered according to a recognized standard or code of practice.

(v) Structural strength for winch for towing function

The design and scantlings are to be capable of withstanding the winch holding capacity, taken as 80% of the minimum breaking load, as given in 11.7.4 of this Part, without permanent deformations at the relevant layer.

Buckling and fatigue are to be considered according to a recognized standard or code of practice.

(vi) Winches intended for both functions are to meet the requirements of both 16.3.3(c)(iv) and 16.3.3(c)(v) above.

(vii) Drums

The drum design is to be carried out with due consideration to the relevant operations.

The drum diameter for steel wire rope should not be less than 14 times the maximum intended diameter of the rope. However, for all rope types, the rope bending specified by the rope manufacturer should not be exceeded.

(viii) Towline attachment

The end attachment of the towline to the winch barrel is to be of limited strength making a weak link in case the towline has to be run out.

At least three dead turns of rope are assumed on the drum under normal operation to provide proper attachment.

(ix) Brake on drum intended for towing

The brake is to normally act directly on the drum and should be capable of holding the winch holding capacity, as given in 16.3.3(c)(v) above, at the inner layer. It is to be arranged for manual operation or other means for activation during a failure of the power supply.

(x) Brake on drum intended for anchor handling

The brake is generally to act directly on the drum. It is to be capable of holding at least 1.25 times the maximum torque created from towline pull including dynamic effect. In addition, the brake is to be capable of stopping the rotation of the drum from its maximum speed.

The holding load of the winch is not to be affected by failure of the power supply, and the brake is to be actuated at power failure if the load is not controlled by the winch motors or similar. Means are, however, to be provided for overriding such systems at any time.

(xi) Brakes on drums intended for both functions are to meet the requirements in 16.3.3(c)(ix) and 16.3.3(c)(x) above.

(d) Other equipment

(i) The shark jaw and towing pins are to be capable of sustaining the load defined on the arrangement drawing given in 16.3.3(a)(ii) of this Chapter without exceeding a stress level of $0.67R_{eH}$. Dynamic effects are to be included.

(ii) If an emergency release on shark jaw and towing pins is arranged, the capabilities are to be as specified on the arrangement drawing, given in 16.3.3(a)(ii) of this Chapter.

(iii) When the towing hook is fitted, applicable requirements in 11.7 of this Part are to be complied with.

(e) Marking

Equipment is to be marked to enable them to be readily related to their specifications and manufacturer. When the Society's product certificate is required, the equipment is to be clearly marked by the Society for identification.

16.3.4 Stability

(a) General requirements

For towing operations, stability is to comply with applicable requirements in 11.8 and 11A.4 of this Part.

16.4 Standby Vessels

16.4.1 Introduction

(a) Introduction

The requirements in this section apply to vessels especially designed to carry out rescue and standby services to offshore installations.

(b) Scope

This section contains requirements for hull arrangement, strength and equipment.

(c) Application

Vessels complying with the requirements in 16.4.1 to 16.4.6 of this Section, excluding 16.4.2(b), may be given the class notation **Standby Vessel**.

Note: The flag administration may have requirements for the same items found in the Rules. The stricter one is expected to prevail.

If, in addition, the vessel complies with requirements for strengthening of the superstructure and deckhouses given in 16.4.2(b), the notation may be extended to **Standby Vessel– Harsh Weather**, which is recommended for vessels primarily operating in harsh weather conditions.

16.4.2 Hull

(a) Ship's sides

(i) The net section modulus of transverse stiffeners or side longitudinals, in cm^3, is not, in any region, to be less than:

$$Z_1 = 1.25Z$$

where Z is the net section modulus, as given in Chapters 6A and 12 of Part II.

All stiffeners up to the second deck above the freeboard deck, and forward of 0.2L from F.E. up to forecastle deck, are to have end connections with brackets.

(ii) Longitudinal steel fenders are to be fitted on the ship's sides at freeboard cargo deck and the second deck above. The steel fenders are to extend not less than 0.02L forward of the section where the deck has its full breadth.

In way of steel fender area along the level of the freeboard cargo deck and the second deck above, the net thickness, in mm, for a breadth not less than 800 + 5 *L*, in mm, is not to be less than:

$$t = (4.5 + 0.05L)\frac{b}{s_s}$$

where:

s_s = Standard frame spacing in m
= 0.48 + 0.002 L
= Maximum 0.61 m forward of the collision bulkhead and aft of the after peak bulkhead

b = Width of face plate of stiffeners and primary supporting members

$b/s_s \geq 1.0$

If steel fenders are omitted, as, for instance, within the rescue zone, the above minimum thickness is to be increased by 50%, for a breadth not less than 0.01L, in m, along the level of the freeboard cargo deck and the second deck above.

If the vessel is not assigned with class notation **OSV**, the net side plate thickness above the bilge, in mm, in way of the rescue zone, is not to be less than:

$$t = \max\left\{(4.5 + 0.04L)\frac{b}{s_s};\ 6.5\right\}$$

(iii) The net plate thickness of the exposed weather deck at the rescue zone, in mm, within at least 1.0 m from the ship's side, is not to be less than:

$$t = 6.0 + 0.02L$$

(iv) Bulwark gross plate thickness is not to be less than 7 mm. On the main weather deck the bulwark stays are to have a depth not less than 350 mm at deck, and positioned at every second frame. Open rails are to have ample scantlings and efficient supports.

(v) Scantlings of foundations and supports of towing winch and towing hook are to withstand a load $0.04P_S$ tonnes, where P_S is the total power of the propulsion engines in kW. Acceptable stresses, in N/mm^2, in the supporting structure resulting from bending moment M, in kN·m, and shear force Q, in kN, calculated for the load given above are:

σ_b = bending stress, in N/mm^2, taken as:

$$\sigma_b = \frac{1000\ M}{Z}$$

$$\sigma_b \leq 0.9R_{eH}$$

τ = Average shear stress, in N/mm^2, taken as:

$$\tau = \frac{10Q}{A_{shr}}$$

$$\tau \leq 0.9\ R_{eH}/\sqrt{3}$$

where:

Z = Net section modulus, in cm^3

A_{shr} = Net shear area, in cm^2.

R_{eH} = Specified minimum yield stress specified in Table XI 3-9 or Table XI 3-10 of Part XI, in N/mm^2

For direct strength calculations, the equivalent von Mises stress, in N/mm^2, is to satisfy:

$\sigma_{vm} \leq 0.9R_{eH}$

(b) Steel deckhouses and superstructures for ships assigned class notation **Standby Vessel – Harsh Weather**

(i) Scantling for superstructures and deckhouses

The net section modulus, in cm^3, of stiffeners and beams not contributing to longitudinal strength is not to be less than:

$$Z = \frac{f_u |P| s\, l_e^2}{f_e C_s R_{eH}}$$

where:

P	=	Design pressure in kN/m^2
	=	P_D for exposed decks
	=	$Max(P_{SI}\ ;\ P_W)$ for exposed superstructure side
	=	P_A for exposed end bulkheads and deckhouse boundaries
	=	Minimum 10 kN/m^2 for weather decks
	=	Minimum 5 kN/m^2 for top of the wheelhouse
	=	8 kN/m^2 for accommodation decks, aft of 0.2L from A.E. and forward of 0.2L from F.E.
	=	6.5 kN/m^2 elsewhere
P_D	=	Design sea pressure, in kN/m^2, as given in CSR-H Pt.1 Ch.4 Sec.5 [2] and Pt.1 Ch.4 Sec.5 [4.2], as applicable
P_{SI}	=	Design sea pressure, in kN/m^2, for superstructure side, as given in CSR-H Pt.1 Ch.4 Sec.5 [4.3]
P_W	=	Wave pressure, in kN/m^2, for superstructure side, as given in CSR-H Pt.1 Ch.4 Sec.5 [1.3]
P_A	=	Design sea pressure, in kN/m^2, for end bulkheads of superstructure and deckhouse boundaries, as given in CSR-H Pt.3 Ch.4 Sec.5 [4.4.1]
f_e	=	Bending moment factor as defined in CSR-H Pt.1 Ch.6 Sec.6 Table 2, where the notation f_{bdg} is employed. For stiffeners with end fixity deviating from the ones included in CSR-H Pt.1 Ch.6 Sec.6 Table 2, with complex load pattern, or being part of a grillage, the requirement in CSR-H Pt.1 Ch.6 Sec.5 [1.2] applies.
f_u	=	Factor for unsymmetrical profiles, to be taken as:
	=	1.00 for flat bars and symmetrical profiles (T-profiles)
	=	1.03 for bulb profiles
	=	1.15 for unsymmetrical profiles (L-profiles)
C_S	=	Permissible bending stress coefficient, taken as:
		C_S= 0.75 for acceptance criteria set AC-SD.
R_{eH}	=	Specified minimum yield stress specified in Table XI 3-9 or Table XI 3-10 of Part XI, in N/mm^2

(ii) Stiffeners are to have effective end connections, i.e. with brackets or welded webs. Stiffeners on lower front bulkhead on weather deck forward are to have brackets at the lower ends.

(iii) The net plate thickness, in mm, in superstructures and deckhouses is not to be less than:

$$t = (t_0 + 0.02L)c\sqrt{K}$$

where:

t_0	=	4.5 mm for front bulkheads and weather deck forward of the lowest tier of the front bulkhead
	=	3.5 mm for sides and aft end bulkheads and weather decks elsewhere

= 3.0 mm for superstructure and deckhouse decks (in way of accommodation).

c = Coefficient taken as: c = max(b/650 ; 1.0)

K = Material factor as specified in 1.5.2(a) of Part II.

16.4.3 Systems and equipment

(a) Towing arrangement

(i) When the vessel is fitted with means for emergency towing, the towing winch and/or towing hook is to satisfy the requirements given in 11.7 and 11.8 of this Part.

(ii) For ships which are not built according to the rules for **Tug**, **Towing**, **Anchor Handling** or **AHT** notation, the towing wire and all connected parts are to have a minimum breaking load of $0.04P_S$ tonnes, where P_S is the total power of the propulsion engines in kW.

(iii) All loose gear of the towing equipment, like shackles, rings, wire and ropes are to be delivered with a works certificate.

(b) Exhaust outlets

Exhaust outlets from diesel engines are to have spark arrestors.

(c) Propulsion

The vessel is to be fitted with two propulsion systems, or similar, capable of moving the vessel in the forward/aft direction.

16.4.4 Fire safety and lifesaving appliances

(a) Rescue zone arrangement, equipment and facilities

(i) The vessel is to be arranged with a rescue zone on each side with minimum 8 m length. The area is to be clearly marked on the ship's side. Its location is to be sufficiently far away from the propellers and clear of any ship side discharges up to 2 m below the loaded waterline.

(ii) Access routes from the rescue zones to survivors' accommodation and to helicopter winch zone, if provided, are to have slip-resistant deck coating or wooden lining with surface treatment giving equivalent properties.

(iii) The ship's side in way of the rescue zone is to be free of any obstructions, such as fenders, and clear of any discharge pipe connections.

(iv) Satisfactory lighting is to be available, capable of providing a minimum illumination level of 150 lux at the rescue zone and 50 lux at a distance of 20 m from the vessel.

(v) The deck area in way of the rescue zone should preferably be free from air pipes, valves, smaller hatches, etc. However, when this becomes impractical, proper arrangement is to be provided to protect against personal injury.

(vi) To enable direct boarding on the deck, a bulwark or railings in the rescue zone are to be easy to open or remove.

(vii) A searchlight is to be available on each side, and is to be operable from the navigation bridge. The searchlights should be able to provide an illumination level of 50 lux in clear air, within an area not less than 10 m diameter, up to a distance of 250 m.

(viii) Each rescue zone is to be provided with a scrambling net made of corrosion resistant and non-slip material.

(ix) The vessel is to be provided with power assisted means capable of ensuring careful recovery of disabled persons from the sea.

(x) A decontamination area equipped with a shower system is to be arranged for cleaning survivors and crew before entering the superstructure.

(b) Survivors spaces

(i) The vessel is to have a treatment room for casualties, a recovery room with berths, and enclosed space to accommodate survivors. These spaces are to be provided with lighting and means to control temperature and humidity suitable for the area of operation. The survivors may be accommodated in crew spaces, excluding sanitary rooms, treatment rooms, the galley, wheelhouse, radio room, and cabins for the captain and two crew members.

The designed capacity for survivors is to be determined considering 0.75 m^2 per person. This includes free floor space and floor space with loose furniture, fixed seating and/or fixed beds. Other fixed furniture, toilets and bathrooms are to be excluded.

Corridors and doors giving access to the treatment room for casualties and recovery room are to be dimensioned to allow adequate transport of survivors by stretchers.

(ii) Sanitary facilities are to be available exclusively for the survivors. At least one installation, comprising a toilet, a wash basin, and shower, is to be provided for each group of 50 survivors.

(c) Safety equipment

(i) The vessel is to be equipped with at least one fast rescue boat of type complying with IMO MSC/Circ.809, arranged and maintained to be permanently ready for use under severe weather conditions. The launching arrangement is to be a SOLAS-approved type.

(ii) The following minimum safety equipment is to be provided when the vessel has a gross tonnage less than 500:

- one line-throwing appliance with not less than four projectiles and four lines
- one daylight signalling lamp
- six lifebuoys, four of which to be equipped with self-igniting lights and buoyant lines (SOLAS-approved type)
- one SOLAS-approved immersion suit for each crew member
- one SOLAS-approved lifejacket for each crew member plus 25% of the number of survivors that the vessel is intended to carry.

(d) Care of personnel

(i) The treatment room is to have adequate equipment and medical supplies.

(ii) Treatment room equipment and medical stores are to be arranged as required by local regulations or based on recognised standards.

Note: The vessel should be provided with blankets in sufficient quantity for the number of survivors that the vessel is intended to carry.

16.4.5 Stability

(a) Intact and damage stability

The vessel is to comply with intact stability requirements given in 16.2.5 of this Chapter and damage stability requirements given in 16.2.5(e) of this Chapter.

16.4.6 Openings and closing appliances

(a) Freeing ports

The area of the freeing ports in the side bulwarks on the cargo deck is to at least meet the requirements of 13.2 of Part II. The arrangement of the freeing ports is to be carefully considered to ensure the most effective drainage of water trapped on the weather deck.

(b) Weathertight doors

(i) The arrangement and sill heights of weathertight doors are to comply with 17.4.2 of Part II. Doors in exposed positions on the lowest weather deck and in the lowest unprotected fronts and sides are to be of steel.

(ii) For doors located in exposed positions in sides and front bulkheads, the requirements to sill heights apply one deck higher than specified in 17.4.2 of Part II.

(iii) Doorways to the engine room and other compartments below the weather deck are, as far as practicable, to be located at a deck above the weather deck. Alternatively, two weathertight doors in series may be accepted.

(c) Windows and side scuttles

Arrangement of windows and scuttles is to comply with the requirements given in 16.2.6(c) of this Chapter.

16.5 Windfarm Maintenance Vessels

16.5.1 Introduction

(a) Introduction

The requirements in this section apply to vessels intended for maintenance of offshore wind farms.

Wind farm maintenance may include:

- being a mother craft for smaller craft transferring technicians to and from offshore wind turbines
- transferring technicians directly to the wind turbine
- transferring supplies to the wind turbine
- performing smaller lifting operations onto the wind turbine.

(b) Scope

This section contains requirements for hull arrangement, strength, equipment, and dynamic positioning systems.

Note: Coastal state and/or statutory regulations may include requirements in excess of the provisions of the Rules depending on the size, type, location and intended service of the unit/installation. These requirements are excluded from this section.

(c) Application

Vessels intended for for maintenance of offshore wind farms, and built in compliance with class notation **OSV** together with the requirements in this section, may be given the class notation qualifier **Windfarm Maintenance**.

16.5.2 Testing requirements

(a) Cranes

After completed installation on board, load- and functional testing of the crane are to be carried out as specified in Rules for the Construction and Survey of Cargo Gear.

(b) Work boat davits

Testing at factory and after installation on board is to be performed in line with IMO MSC. 81(70) part 2.

16.5.3 Hull

(a) Hull arrangement and strength

(i) The hull structural strength is to be as required for the classification taking into account necessary strengthening of supporting structures for equipment applied during the maintenance and service of offshore wind farms.

(ii) All load effects caused by deck cargo and heavy equipment are to be accounted for in the design calculations for all operational phases.

16.5.4 Systems and equipment

(a) Cranes

(i) Wind farm maintenance vessels equipped with cranes are to comply with Rules for the Construction and Survey of Cargo Gear.

(ii) The crane is to be delivered with the Society's product certificate to confirm compliance with Rules for the Construction and Survey of Cargo Gear.

(b) Offshore transfer systems

When requested by the Owner, the notation **Walk-to-Work** may be assigned for vessels equipped with offshore transfer systems for transferring technicians from ship to wind turbine, provided that the transfer system is designed according to a recognized standard acceptable to the Society.

(c) Work boat davits

(i) Where fitted, work boat davits and winches are to comply with SOLAS 1974 and the LSA Code.

(ii) Functional and operational requirements:

- no requirements to heel or trim unless specified by operator
- stored mechanical power not required, however lowering in dead ship condition is to be possible
- no requirements to hoisting or lowering speed unless specified by the flag administration
- if the estimated dynamic factor exceeds 1.5, shock damper arrangement is required.

(iii) In addition to the strength requirements given in the above regulations, fatigue checks are to be performed in accordance with a recognised standard acceptable to the Society.

(d) Work boats

(i) All work boats fitted onboard are to be contructed according to 1.1.16 in Part I.

(ii) The ship side in way of the work boats is to be equipped with fenders to reduce impact loads during launch and recovery of the craft.

16.5.5 Dynamic positioning

(a) Dynamic positioning system

The vessel is, as a minimum, to comply with the requirements for class notation **DPS-II**.

(b) Capability plots

(i) The position keeping ability of the vessel is to be calculated and presented in form of capability plots as outlined in the Rules. The capability plots are to be kept onboard.

Note: It is recommended that a recognised standard, such as IMCA M 140 Rev. 1, be used as a guideline for making capability plots. The correlation between wind speed and waves height and period provided in this standard can also be used for current speeds other than those specified by the standard. Linear interpolation between points is acceptable.

(ii) The capability plots are to be produced in polar form, as a static analysis, with coincident forces of wind, waves, and current. In the analysis, the vessel is to maintain fixed position and heading, and is to be exposed to forces from a fixed current speed corresponding to the intended location of operation, but in any case not less than 1.5 m/s with correlating wind and waves. The fixed current speed applied is to be specified in the appendix to the classification certificate.

(iii) Therefore, there is to be, at the same time, a balance of forces and a balance of moments, including all moments generated by the thrusters, and those caused by environmental forces.

(iv) The limiting wind speeds, where the current, wind and wave forces are equal to the maximum available thruster forces, are to be plotted at least every 15° around the vessel. Linear interpolation between points is acceptable.

(v) The environmental forces caused by wind, waves, and current are to be calculated by recognised methods, or may be obtained by model testing.

(vi) The capability plots are to be based upon the available power and the thrust output that is under control, in the most efficient control mode.

(vii) A minimum of four plots is required:

- Case 1 is to represent optimal use of all thrusters
- Case 2 is to represent minimum effect of single-thruster failure
- Case 3 is to represent the maximum effect of single-thruster failure
- Case 4 is to represent the worst case failure modes. There is to be one plot for failure of each redundancy group, or an amalgamated plot is to be provided with the lowest result for each heading across all the redundancy groups.

All plots are to be produced at the same scale.

Note: It is recommended that the wind speed scale be taken as 15 mm: 10 m/s, with a range from 0 to 50 m/s.

Note: An amalgamated plot is to represent the vessel capability in all directions and can therefore, in many cases, represent several different failure conditions, as the worst case single failure (WCSF) typically will be heading-dependent.

Appendix 1

Direct Strength Assessment

A1.1 General

A1.1.1 This chapter provides requirements applicable to ships having rule length L of 150 m or above to assess the scantlings of the hull structure using finite element analysis.

A1.1.2 A design life of 25 years is assumed for selecting ship design parameters. The specified design life is the nominal period that the ship is assumed to be exposed to operating

A1.1.3 The analysis is to verify the following:

(a) Stress levels are within the acceptance criteria for yielding defined in CSR-H Pt1, Ch 7, Sec2 [5] and CSR-H Pt1, Ch 7, Sec3 [6].

(b) Buckling capability of plates and stiffened panels are within the acceptance criteria for bucking defined in CSR-H Pt1, Ch 8.

(c) Fatigue capacity of structural details is within the acceptance criteria defined in CSR-H Pt1, Ch 9.

A1.1.4 FE models for cargo hold FE analyses, full length FE analysis, local fine mesh FE analysis and very fine mesh FE analyses, are to be based on the net scantling approach in accordance with the Rules or other appropriate approach agreed by the Society.

A1.1.5 A flow diagram showing the minimum requirement of finite element analysis is shown in Fig. III A1-1.

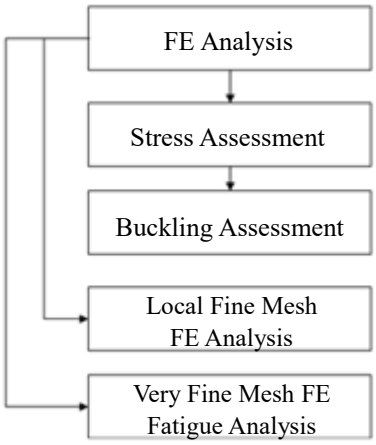

Fig. III A1-1
Flow Chart for FE Analysis

A1.1.6 Reference coordinate system

The ship's geometry, motions, accelerations and loads are defined with respect to the following right-hand coordinate system, see Fig. III A1-2:

Origin : At the intersection among the longitudinal plane of symmetry of ship, the aft end of L and the baseline.

X axis : Longitudinal axis, positive forwards.
Y axis : Transverse axis, positive towards portside.
Z axis : Vertical axis, positive upwards

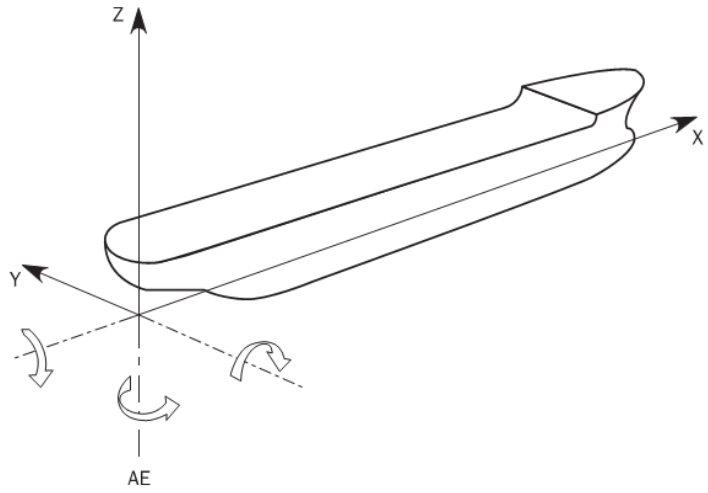

Fig. III A1-2
Reference Coordinate System

A1.2 Loads

A1.2.1 Loading conditions

All representative loading conditions (i.e. full homogenous, ballast, heavy ballast, ...) must be analyzed as specified by the relevant chapter of the rules for the considered ship type.

A1.2.2 North Atlantic wave environment

The rule requirements are based on a ship trading in the North Atlantic wave environment for its entire design life.

A1.2.3 Probability level for strength and fatigue assessments

In this appendix, the assessments are to be understood as follows:

(a) Strength assessment means the assessment for the strength criteria excluding fatigue, for the loads corresponding to the probability level of 10^{-8}, for the ballast water exchange, for harbour conditions and for flooded conditions.

(b) Fatigue assessment means the assessment for the fatigue criteria for the loads corresponding to the probability level of 10^{-2}.

A1.2.4 Loads for strength assessment

(a) The strength assessment is to be undertaken for all design load scenarios and the final assessment is to be made on the most onerous strength requirement.

(b) Each design load scenario for strength assessment is composed of a Static (S) load case or a Static + Dynamic (S+D) load case, where the static and dynamic loads are dependent on the loading condition being considered.

A1.2.5 Loads for fatigue assessment

Each design load scenario for fatigue assessment is composed of a Static + Dynamic (S+D) load case, where the static and dynamic loads are dependent on the loading condition being considered.

A1.2.6 All the static and dynamic hull girder load components, external loads and internal loads should be considered.

A1.3 FEM Modelling

A1.3.1 Model extent

For cargo hold FE analysis, the longitudinal extent of the cargo hold FE model is to cover three cargo hold lengths.

A1.3.2 Element types

Shell elements are to be used to represent plates. All stiffeners are to be modelled with beam elements having axial, torsional, bi-directional shear and bending stiffness. The eccentricity of the neutral axis is to be modelled. Face plates of primary supporting members and brackets are to be modelled using rod or beam elements.

A1.3.3 Meshing

(a) For the strength assessment

Coarse mesh should comply with CSR-H Pt1, Ch7, Sec2, [2.4].

Fine mesh should comply with CSR-H Pt1, Ch7, Sec3, [4].

(b) For the fatigue assessment

Very fine mesh should comply with CSR-H Pt1, Ch9, Sec5, [2.1].

A1.3.4 Boundary conditions for cargo hold models

The whole three dimensional model is assumed to be fixed at one end, while shear forces and bending moments are applied at the other end to ensure equilibrium. At the free end section, rigid constraint conditions are to be applied to all nodes located on longitudinal members, in such a way that the transverse section remains plane after deformation. When the hull structure is modelled over half the ship's breadth, in way of the ship's centerline longitudinal plane, symmetry or anti-symmetry boundary conditions as specified in Table III A1-1 are to be applied, depending on the loads applied to the model (symmetrical or anti-symmetrical, respectively).

Table III A1-1
Symmetry and Anti-Symmetry Conditions in way of the Ship's Centerline Longitudinal Plane

Boundary conditions	Displacements in directions			Rotation around axes		
	x	y	z	x	y	z
Symmetry	free	fixed	free	fixed	free	fixed
Anti-symmetry	fixed	free	fixed	free	fixed	free

A1.3.5 Boundary conditions for full length models

In order to prevent rigid body motions of the overall model, the constraints specified in Table III A1-2 are to be applied.

Table III A1-2
Boundary Conditions to Prevent Rigid Body Motion of the Model

Boundary conditions	Displacements in directions			Rotation around axes		
	x	y	z	x	y	z
One node on the fore end of the ship	free	fixed	fixed	free	free	free
One node on the port side shell at aft end of the ship (1)	fixed	free	fixed	free	free	free
One node on the starboard side shell at aft end of the ship (1)	free	fixed	fixed	free	free	free

Note:
(1) The nodes on the port side shell and that on the starboard side shell are to be symmetrical with respect to the ship's longitudinal plane of symmetry

When the hull structure is modelled over half the ship's breadth, in way of the ship's centerline longitudinal plane, symmetry or anti-symmetry boundary conditions as specified in Table III A1-1 are to be applied, depending on the loads applied to the model (respectively symmetrical or anti-symmetrical).

The loaded full length ship model should be balanced so that the reaction forces at the boundary conditions are negligible.

A1.4 Submission of Results

A1.4.1 Detailed report

A detailed report of the structural analysis is to be submitted by the designer/builder to demonstrate compliance with the specified structural design criteria. This report is to include the following information:

(a) List of plans used including dates and versions.

(b) Detailed description of structural modelling including all modelling assumptions and any deviations in geometry and arrangement of structure compared with plans.

(c) Plots to demonstrate correct structural modelling and assigned properties.

(d) Details of material properties, plate thickness, beam properties used in the model.

(e) Details of boundary conditions.

(f) Details of all loading conditions reviewed with calculated hull girder shear force, bending moment and torsional moment distributions.

(g) Details of applied loads and confirmation that individual and total applied loads are correct.

(h) Plots and results that demonstrate the correct behaviour of the structural model under the applied loads.

(i) Summaries and plots of global and local deflections.

(j) Summaries and sufficient plots of stresses to demonstrate that the design criteria are not exceeded in any member.

(k) Plate and stiffened panel buckling analysis and results.

(l) Tabulated results showing compliance, or otherwise, with the design criteria.

(m) Proposed amendments to structure where necessary, including revised assessment of stresses, buckling and fatigue properties showing compliance with design criteria.

(n) Reference of the finite element computer program, including its version and date.

A1.5 Computer Programs

A1.5.1 Use of computer programs

Any finite element computation program complying with this appendix may be employed to determine the stress and deflection of the hull structure, provided that the combined effects of bending, shear, axial and torsional deformations are considered.

A1.5.2 Calculation data and results

The responsibility for error free specification and input of program data and the subsequent correct transposal of output resides with the designer.

Appendix 2

Intact Stability Requirements for Ships Equipped with Heavy Lift Appliances

A2.1 Stability Information

A2.1.1 Application

This appendix applies to each ship equipped with heavy lift appliances for cargo or other objects and that has a maximum heeling moment due to hook load greater than or equal to the following.

$$\text{Heeling moment} \geq 0.67 \times \Delta \times \text{GM} \times \left(\frac{\text{F}}{\text{B}}\right)$$

where:

Δ	=	displacement of the ship with the hook load included, in metric tons
GM	=	metacentric height with hook load included, in meters
F	=	freeboard to the deck edge amidships, in meters
B	=	beam, in meters

A2.1.2 Definition

(a) Hook load means the weight of the object lifted by the crane.

(b) Load radius means the distance illustrated in Fig. III A2-1

(c) Crane heeling moment is the maximum heeling moment developed by multiplying the weight of the hook load and boom by the horizontal distance from ship's centerline to the hook load and boom center of gravity, considering the full range of crane elevations and weights. The resulting heeling moment is to be converted to a heeling arm at zero degrees by dividing it by the ship displacement. The heeling arm is to be assumed constant for all heel angles.

(d) Equilibrium heel angle is the angle of heel under the combined effects of the hook load, counter-ballasting and a beam wind.

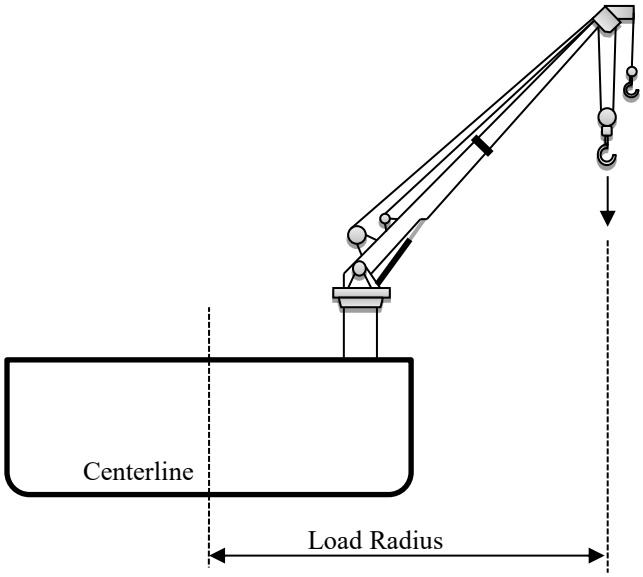

Fig. III A2-1
Load Radius

A2.2 Intact Stability Requirements for Ships Equipped to Lift

A2.2.1 Counter-ballasted and Non-counter-ballasted Ships

(a) Each ship that is equipped to lift is to comply, by design calculations, with this section under the following conditions:

(i) Either for each loading condition and pre-lift condition, or the range of conditions, including pre-lift conditions, delineated by the lifting operations guidelines contained in the trim and stability booklet;

(ii) Crane heeling moment, and

(iii) The effect of beam wind on the projected area of the ship (including deck cargo) should be evaluated for 25.7 m/s wind speed. Should a lesser wind speed be used, that wind speed shall be listed in the trim and stability booklet as an operational restriction during lifting operations.

The wind heeling moment shall be calculated as:

$P \times A \times H$ N-m

where:

P = Wind pressure, calculated as per below.

A = Projected lateral area, in square meters, of all exposed surfaces (including deck cargo), in the upright condition.

H = Vertical distance, in meters, from the center of A to the center of the underwater lateral area or approximately to the one-half draft point.

This wind heeling moment is to remain constant for all heel angles.

$P = fV_k^2 C_h C_s$ N/m^2

where:

f = 0.611

V_k = Wind velocity in m/s

C_s = 1.0, shape coefficient

C_h = height coefficient from Table III A2-1

Table III A2-1
Values of C_h

H (m)	C_h
0.0 ~ 15.3	1.00
15.3 ~ 30.5	1.10
30.5 ~ 46.0	1.20
46.0 ~ 61.0	1.30
61.0 ~ 76.0	1.37
76.0 ~ 91.5	1.43
91.5 and above	1.48

(b) Each ship is to have a righting arm curve with the following characteristics:

(i) The area under the righting arm curve from the equilibrium heel angle (based upon the wind heeling moment) up to the smallest of the following angles must be at least 0.080 meter-radians:

(1) The second intercept

(2) The downflooding angle

(3) 40 degrees

(ii) The lowest portion of the weather deck and downflooding point should not be submerged at the equilibrium heel angle.

(iii) The heeling angle based on the crane heeling moment and effect of the beam wind shall not exceed the maximum heel angle from the crane manufacturer.

The righting arm curve is to be corrected for the increase in the vertical center of gravity due to the lifting operation. (The increase in the VCG is due to the boom being in the elevated position, and the hook load acting at the elevated end of the boom.).

A2.2.2 Additional Intact Stability Standards – Counter-ballasted Ships

The following recommended criteria are based on crane operations taking place in favorable weather conditions. The analysis should be carried out for the counter-ballast case when the ship is floating with a heel and trim not exceeding the maximum cross angle. The maximum cross angle is the angle corresponding to the crane operational restrictions.

The righting arm curve is to be corrected for the increase in the vertical center of gravity due to the load. (The increase in the VCG is due to the boom being in the elevated position, and the hook load acting at the elevated end of the boom.).

(a) For any condition of loading and crane heeling moment, the first intercept of the heeling arm curve with the righting arm curve (equilibrium point) is to occur prior to submergence of the deck edge. The following requirements are also to be met, with the ship at the maximum allowable vertical center of gravity, to provide adequate stability in case of sudden loss of crane load.

(b) The residual area (area A_1 in Fig. III A2-2) between the first intercept and the angle of downflooding or the second intercept, whichever occurs first, is not to be less than 30% in excess of area A_2 in Fig. III A2-2.

(c) The angle of the first intercept between the righting lever curve after loss of crane load and the maximum permissible counter ballast lever curve is not to exceed 15° (angle of equilibrium after loss of crane load).

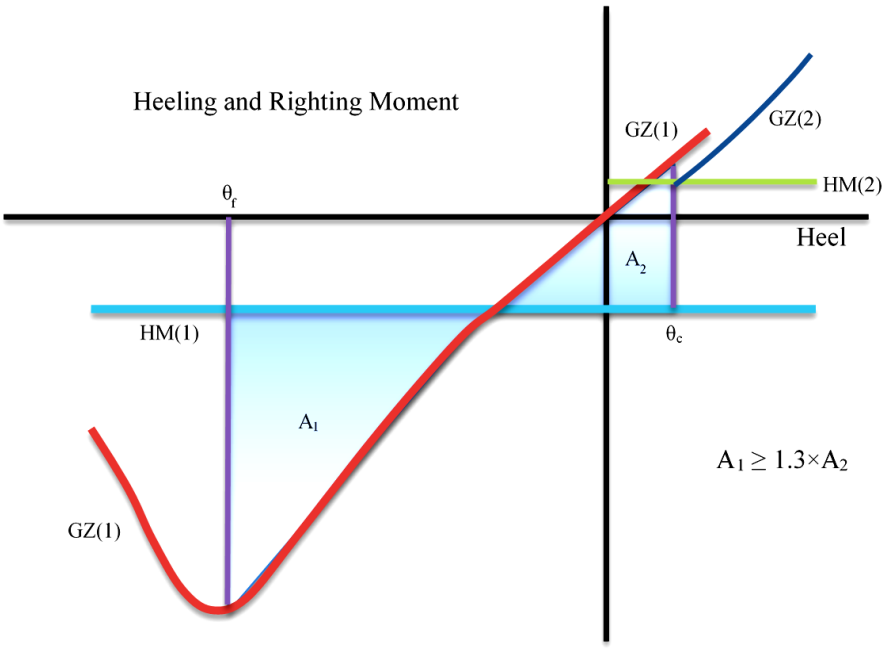

GZ(1)	=	Righting moment curve at the displacement corresponding to the vessel without hook load.
GZ(2)	=	Righting moment curve at the displacement corresponding to the vessel with hook load.
HM(1)	=	Heeling moment curve due to the heeling moment of the counter-ballast at the displacement without hook load.
HM(2)	=	Heeling moment curve due to the combined heeling moments of the hook load and the counter-ballast at the displacement with hook load.
θ_f	=	Limit of area integration to the downflooding angle or second intercept on the counter-ballasted side of the vessel.
θ_c	=	Limit of area integration to the angle of static equilibrium due to the combined hook load and counter-ballast heeling moment.

Fig. III A2-2
Criteria after Accidental Loss of Crane Load

Tel: *+886 2 25062711*
Fax: *+886 2 25074722*
E-mail: *cr.tp@crclass.org*
Website: *http://www.crclass.org*
© CR – All rights reserved

財團法人驗船中心
CR CLASSIFICATION SOCIETY

RULES FOR THE CONSTRUCTION AND CLASSIFICATION OF STEEL SHIPS 2022

PART IV – MACHINERY INSTALLATIONS – CONSTRUCTION AND SHAFTING

July 2022

財團法人驗船中心
CR CLASSIFICATION SOCIETY

RULES FOR THE CONSTRUCTION AND CLASSIFICATION OF STEEL SHIPS 2022

PART IV – MACHINERY INSTALLATIONS – CONSTRUCTION AND SHAFTING

July 2022

RULES FOR THE CONSTRUCTION AND CLASSIFICATION OF STEEL SHIPS

PART I CLASSIFICATION AND SURVEY

PART II HULL CONSTRUCTION AND EQUIPMENT

PART III SPECIAL SERVICE AND TYPE OF SHIPS

PART IV MACHINERY INSTALLATIONS – CONSTRUCTION AND SHAFTING

PART V BOILERS, PRESSURE VESSELS, THERMAL OIL HEATERS AND INCINERATORS

PART VI PIPING AND PUMPING SYSTEMS

PART VII ELECTRICAL INSTALLATIONS

PART VIII AUTOMATIC OR REMOTE CONTROL AND MONITORING SYSTEMS

PART IX FIRE PROTECTION, DETECTION AND EXTINCTION

PART X REFRIGERATED CARGO INSTALLATIONS

PART XI MATERIALS

PART XII WELDING

PART XIII NAVIGATIONAL SAFETY SYSTEMS

PART XIV GOAL-BASED SHIP CONSTRUCTION STANDARDS SHIPS

PART XV HULL CONSTRUCTION AND EQUIPMENT FOR SHIPS LESS THAN 90 M IN LENGTH

List of major changes in Part IV from 2019 edition

3.6.2(c)	Amend No.1	4.3.9	Amend No.2
3.12.8(d)(iii)	Amend No.1	4.3.6	Amend No.2
4.1.5(a)(iv)	Amend No.1	4.3.11	Amend No.2
4.2.11(e)	Amend No.1	4.3.12	Amend No.2
4.2.16~4.2.19	Amend No.1	4.5	Amend No.2
4.6	Amend No.1	4.5.4	Amend No.2
4.6	Amend No.1	4.5.5	Amend No.2
7.2.1	Amend No.1	4.5.6	Amend No.2
9.2.3 & 9.2.4	Amend No.1	4.6.4(c)	Amend No.2
Table IV 9-1	Amend No.1	9.1.1	Amend No.2
1.3.3	Amend No.2	9.2.3(a)	Amend No.2
Table IV 1-1	Amend No.2	9.2.4	Amend No.2
4.3.2(e)	Amend No.2	9.2.5	Amend No.2
4.3.3	Amend No.2	9.2.6	Amend No.2
4.3.6	Amend No.2	9.2.7	Amend No.2
4.3.7	Amend No.2		
4.3.8	Amend No.2		

Acronyms

AIS	Automatic Identification System
ANTS	Automatic Navigation and Track-keeping System
ARPA	Automatic Radar Plotting Aid
BC Code	Code of Safe Practice for Solid Bulk Cargoes
BNWAS	Bridge Navigational Watch Alarm System
CA	Controlled Atmosphere
CDI	Chemical Distribution Institute
COW	Crude Oil Washing
CPA	Closest Point of Approach
CPP	Controllable Pitch Propeller
CSC	International Convention for Safe Containers
CSR	Common Structural Rules
CTOD	Crack Tip Opening Displacement
ECDIS	Electronic Chart Display and Information System
EEBD	Emergency Escape Breathing Devices
ENC	Electronic Navigational Chart
ESP	Enhance Survey Plan
ETA	Emergency Towing Arrangement
FEU	Forty-foot Equivalent Unit
FMEA	Failure Mode & Effect Analysis
FRP, GRP	Fibreglass Reinforced Plastics
FTP Code	International Code for Application of Fire Test Procedures
GBS	Goal-Based ship construction Standards
GDC	General Dry Cargo
GLONASS	Global Navigation Satellite System
GMDSS	Global Maritime Distress and Safety System
GPS	Global Positioning System
HAZ	Heat Affected Zone
HHP anchor	High Holding Power anchor
HSC	High Speed Craft
HTS	High Tensile Steel
IACS	International Association of Classification Societies
IBC Code	International Code for the Construction and Equipment of Ships Carrying Dangerous Chemicals in Bulk
ICS	The International Chamber of Shipping
IEC	International Electrotechnical Commission

IGC Code	International Code for the Construction and Equipment of Ships Carrying Liquefied Gases in Bulk
ILO	International Labour Organization
IMDG Code	International Maritime Dangerous Goods Code
IMO	International Maritime Organization
ISO	International Standards Organization
LAN	Local Area Network
LCS	Loading Computer System
LEL	Lower Explosive Limit
LRIT	Long-range Identification and Tracking of ships
MARPOL	International Convention for the Prevention of Pollution from Ships
MARVS	Maximum Allowable Relief Valve Setting
MEPC	Marine Environment Protection Committee
MLC	Maritime Labour Convention
MSC	Maritime Safety Committee
NDT	Nondestructive Testing
OCIMF	The Oil Companies International Marine Forum
OOW	Officer Of the Watch
PA	Public Address
PMA	Permanent Means of Access
PMS	Planned Machinery Maintenance Scheme
RH	Relative Humidity
RIT	Remote Inspection Techniques
PSPC	Performance Standard for Protective Coating
SENC	System Electronic Navigational Chart
SHHP anchor	Super High Holding Power anchor
SOLAS	International Convention for the Safety of Life at Sea
SRE	Ship Recycling
STCW	International Convention on Standards of Training, Certification and Watch-keeping for Seafarers
STS operation	Ship-To-Ship operation
S-VDR	Simplified Voyage Data Recorder
TCPA	Time to CPA
TEU	Twenty-foot Equivalent Unit
THD	Total Harmonic Distortion
TMCP	Thermo-Mechanical Controlled Processing

UPS	Uninterruptible Power Supply
VDR	Voyage Data Recorder
VEC	Vapor Emission Control

RULES FOR THE CONSTRUCTION AND CLASSIFICATION OF STEEL SHIPS

PART IV
MACHINERY INSTALLATIONS –CONSTRUCTION AND SHAFTING

CONTENTS

Chapter 1 General 1

1.1 General 1
1.2 Units and Formulae 1
1.3 Essential Service Auxiliaries 2
1.4 Materials 2
1.5 Drawings and Data 3
1.6 General Construction 3
1.7 Tests and Inspections 5
1.8 Certification on Basis of Approved Quality Assurance Scheme for Machinery 6

Chapter 2 Steam and Gas Turbines 7

2.1 General 7
2.2 Drawings and Data 7
2.3 Materials 7
2.4 Main Turbine Arrangement 7
2.5 Construction 8
2.6 Strength Calculations 9
2.7 Safety Devices and Control Equipment of Steam Turbines 11
2.8 Safety Devices of Gas Turbines 12
2.9 Tests and Inspections 13

Chapter 3 Diesel Engines 15

3.1 General 15
3.2 Drawings and Data 15
3.3 Materials 15
3.4 Construction 15
3.5 Crankshafts 20
3.6 Starting Arrangements 33
3.7 Air Intake and Exhaust Arrangements 33
3.8 Fuel, Lubrication and Cooling Arrangements 34
3.9 Type Tests of Mass Produced Diesel Engines 35
3.10 Tests, Inspections and Certification of Diesel Engine Component 38
3.11 Factory Acceptance Test and Shipboard Trials 44
3.12 Type Testing of Diesel Engines 49
3.13 Turbochargers 56

Chapter 4 Deck Machinery and Essential Auxiliaries 60

4.1 General 60
4.2 Steering Gears 61
4.3 Windlass 68
4.4 Reciprocating Compressors 72
4.5 Pumps 73
4.6 Thrusters 73
4.7 Tests and Inspections 81

Chapter 5 Gearing and Couplings 84

5.1 General 84
5.2 Construction 85
5.3 Design – Load Capacity of Involute Parallel Axis Spur and Helical Gears 86
5.4 Workmanship 98
5.5 Tests and Inspections 99

Chapter 6 Shafting 101

6.1 General 101
6.2 Intermediate Shafts 102
6.3 Thrust Shafts 103
6.4 Propeller Shafts and Tube Shafts 103
6.5 Other Shafts 104
6.6 Shafting Accessories 104
6.7 Protection for Propeller Shaft against Corrosion 106
6.8 Torsional Vibration 106
6.9 Axial Vibrations 109
6.10 Lateral (Whirling) Vibrations 110
6.11 Propulsion Shaft Alignment 110
6.12 Measurements 112
6.13 Tests and Inspections 112
6.14 Shafting Scantling for Ships Less than 500 GT 112

Chapter 7 Propellers 114

7.1 General 114
7.2 Strength Calculations 114
7.3 Construction 118
7.4 Tests and Inspections 119

Chapter 8 Guide for Spare Parts 121

8.1 General 121

Chapter 9 Special Requirements for Machinery Installed in Ships with Restricted Area of Service and Small Ships 124

9.1 General 124
9.2 Modified Requirements 124

Chapter 10 Dynamic Positioning System 129

10.1 General 129
10.2 General Arrangement 131
10.3 Control System 133
10.4 Thruster Systems 137
10.5 Power Systems 137

Chapter 1
General

1.1 General

1.1.1 The requirements of this Part are applicable to the machinery intended for ships without special service limitations or restrictions. The Society may, however, modify the requirements in certain particular cases for their application to ships with service limitations or restrictions.

1.1.2 The Society will be prepared to give special consideration to the novel features of design in respect of the machinery based on the best information available at the time.

1.1.3 Passenger ships intended for classification are to be constructed in accordance with the requirements of the Society as well as those of Governmental and International Convention Regulations.

1.1.4 The formulae for scantlings of parts of the machinery given in the present Part do not take into consideration the possibility of additional stresses due to the presence of dangerous vibrations in the installation at speeds within the operating range, and the manufacturer of the machinery is required to take responsibility in the application of these formulae.

1.2 Units and Formulae

1.2.1 Units and formulae included in the Rules are shown in SI units.

1.2.2 Pressure gauges may be calibrated in bar.
where: 1 bar = 0.1 MPa

1.2.3 Ambient reference conditions

(a) The rating for classification purposes of main and essential service auxiliary machineries intended for installation in seagoing ships to be classed for unrestricted service is to be based on a total barometric pressure of 1,000 mbar, an engine room ambient temperature or suction air temperature of 0°C to 45°C, a relative humidity of 60% and a sea water temperature of 32°C or, where applicable, the temperature of the charge air coolant at the inlet of 32°C. In the case of open deck location, the temperature range is to be –25°C to 45°C. The engine manufacturer is not expected to provide simulated ambient reference conditions at a test bed.

(b) In the case of ships to be classed for restricted service, the rating is to be suitable for the temperature conditions associated with the geographical limits of the restricted service.

1.2.4 Power rating
Where requirements to dimensions in the Rules are based on output and revolutions, the values to be applied are to be derived from the following:

(a) For main propelling machinery, the maximum continuous output and corresponding revolutions per minute give the maximum torque for which the machinery is to be classed.

(b) For essential auxiliary machinery, the maximum continuous output and corresponding revolutions per minute which will be used in services.

1.3 Essential Service Auxiliaries

1.3.1 When applying the requirements of the Rules, the so called essential service auxiliaries may generally be assumed as specified hereinafter.

1.3.2 Auxiliaries include their prime movers and controllers which are necessary for the propulsion of the ship:

Cooling pumps.
General service pumps.
Fuel pumps.
Lubricating oil pumps.
Purifiers.
Hydraulic pumps (for control use).
Air compressors (for starting and control use).
Scavenging pumps, blowers and exhaust gas turbochargers.
Condensate pumps.
Drain pumps.
Circulating cooling water pumps.
Condenser ejector pumps.
Gland exhaust fans.
Boiler feed water pumps.
Boiler water circulating pumps.
Boiler fans.
Electric Generators.
Evaporators (for main propelling machinery and boiler use).

1.3.3 Auxiliaries include their prime movers and controllers which are necessary for the safety of life and for the safety or operation of the ship at sea:

Bilge pumps (including pumps for oily bilge separator use).
Ballast pumps.
Fire pumps.
Steering gear.
Athwartship thrust units.
Windlasses.
Mooring winches or capstans.
Hydraulic appliances (for windlasses and mooring machineries).
Fans for machinery spaces and serving hazardous spaces.
Electric generators (for emergency source of power).
Machineries and equipment of venting, purging, gas freeing and ventilation systems (for tankers).
Machinery and boiler control equipment.
Incinerator.

1.3.4 Other auxiliaries deemed as an essential by the Society.

1.4 Materials

1.4.1 The materials used for the construction of main parts of machinery are to comply with the requirements of Part XI, or such other appropriate material specifications as may be approved by the Society in connection with a particular design.

1.4.2 The materials for component parts of machinery are to be subjected to those test set out in the relevant Chapters of this Part. The Society may, however, require material tests conducted on other important component parts and test methods not included in this Part.

1.4.3 The materials for component parts of machinery exposed to high temperature or chemical attack are to be of suitable quality.

1.4.4 Metal spraying and locking of cracks by special clamps etc. on shafting and other dynamically stressed parts of machinery are not permitted.

1.4.5 Steam reciprocating engines for main propelling and essential auxiliary services, where installed, are to comply with the applicable parts dealing with steam reciprocating engines in the 1976 edition of the Rules for Steel Ships.

1.5 Drawings and Data

1.5.1 For machineries built under special survey during construction, drawings showing the proposed arrangements of machinery compartments and such drawings of the machineries as stated in the subsequent Chapters of this Part are to be submitted for approval before proceeding with the work.

1.5.2 The proposed dimensions and quality of materials as well as all important arrangements and details are to be made clear in the drawings.

1.5.3 Drawings and descriptions of centralized and automatic control systems for the main propelling installation and essential service auxiliaries are to be submitted for consideration in accordance with the applicable requirements in Part VIII.

1.5.4 For any novel design of machinery, detailed drawings of parts and necessary data are to be submitted for consideration.

1.6 General Construction

1.6.1 Inclination of ships

The designs and constructions of machinery installations are to be in compliance with accepted marine engineering practices and the machineries are to be operable with complete reliability in all positions and motions with the ship under the conditions as shown in Table IV 1-1.

Table IV 1-1
Inclination of Ships(5)

Installations, components	Athwartships(2)		Fore-and-aft(2)	
	Static	Dynamic	Static	Dynamic
Main and auxiliary machinery	15°	22.5°	5°(4)	7.5°
Safety equipment, e.g. emergency power installations, emergency fire pump and their devices Switch gear, electrical and electronic appliances (1), and remote control systems	22.5°(3)	22.5°(3)	10°	10°

Notes:

(1) No undesired switching operations or operational changes are to occur.

(2) Athwartships and fore-and-aft inclinations may occur simultaneously.

(3) In ships for the carriage of liquefied gases and of chemicals the emergency power supply must also remain operable with the ship flooded to a final athwartships inclination up to maximum of 30°.

(4) Where the length of the ship exceeds 100m, the fore-and-aft static angle of inclination may be taken as 500/L degrees where L = length of the ship, in meters, as specified in 1.2.1 of Part II of the Rules.

(5) The Society may consider deviations from these angles of inclination taking into consideration the type, size and service conditions of the ship.

1.6.2 Availability for operation

Ship's machinery is to be so arranged that it can be brought into operation from the "dead ship" condition using only the facilities available on board. "Dead ship" condition is understood to mean that the entire machinery installation, including the power supply, is out of operation and that auxiliary services such as compressed air, starting current from batteries, etc., for bringing the main propulsion into operation and for the restoration of the main power supply are not available. In order to restore operation from the "dead ship" condition, an emergency generator may be used provided that it is ensured that the emergency power supply from it is available at all times. It is assumed that means are available to start the emergency generator at all times.

1.6.3 Astern powers

The machinery built for propulsion purposes are to be of sufficient power for going astern in order to secure proper control of the ship in all normal circumstances. The astern power is to be of sufficient for maintaining in free route astern 70% of the ahead rated shaft revolutions for a period of at least 30 minutes. The output astern which may be developed in transient conditions is to be such as to enable the braking of the ship within a reasonable time. For main propulsion systems with reversing gear, controllable pitch propellers or electric propulsion equipment, the running astern is not to lead to the overload of the propulsion machinery.

1.6.4 Turning gear

Provision is to be made so that it is possible to turn the main propelling and auxiliary machineries. For the propelling turbine, the turning gear is to be power driven, and if electric, is to be continuously rated. An interlocking warning device is to be provided to ensure that the machinery cannot be started while the turning gear is engaged.

1.6.5 All component parts of machinery subject to stresses are to be made of approved sound materials, and have clearances and proper fits consistent with the best marine engineering practices.

1.6.6 Welded construction

The welded constructions are to be in compliance with the requirements specified in Part XII.

1.6.7 Safety devices on moving parts

(a) Efficient means are to be provided to prevent the loosening of nuts and screws of moving parts.

(b) The moving parts of machinery and shafting are to be efficiently protected by means of handrails, screens, etc.

1.6.8 Seating and fixing

(a) The machinery seating is to be of rigid construction and adequately attached to the hull. The effects of hull structure deformation on the machinery and excessive stressing due to shock and vibration as well as the thermal expansion of machinery are to be taken into account. Provision is to be made, as far as practicable, to ensure continuity between the longitudinal and transverse elements of the seating and the corresponding elements of the adjacent hull.

(b) The machinery is to be so securely bolted to the seating as to prevent any displacement due to the movements of the ship. The bedplate chock is to be of uniform fit before bolts are tightened.

(c) The accessories of machinery as well as spare parts of large dimensions are to be strongly secured so that they can not move or become loose under the movements of the ship.

1.6.9 Arrangements and ventilations

(a) The arrangement of machinery in the machinery compartment and tunnel is to be such that sufficient space is allowed for easy operation, maintenance and overhauling of machinery.

(b) Necessary instruments for a safe and speedy maneuvering and indicating the working condition of the machinery are to be clearly arranged at suitable positions.

(c) The machinery compartment is to be well ventilated and the ventilator is to be so arranged that any accumulation of inflammable gases is prevented as far as practicable.

(d) Flange joints and special joints (threaded pipe joints, compression fitting joints, etc.) in fuel oil, lubricating oil and other flammable oil pipings, and apparatuses contain fuel oil, lubricating oil or other flammable oil are not to be located right above hot surface on boilers, stream pipe lines, thermal oil pipe lines, exhaust gas pipe lines, silencers or exhaust gas driven turbochargers, etc. and to be arranged far apart therefrom, as far as practicable. An approved means to prevent oil from spraying is to be provided at these joints and apparatuses except where Society deems unnecessary to provide such means.

1.6.10 Communications

(a) The ship is to be fitted with 2 independent means of communicating orders between the bridge and engine room control station from which the engines are normally controlled. One of these means is to be an engine room telegraph which visually indicates the order and response, both at the engine room control station and on the bridge.

(b) At least one means of communication is to be provided between the bridge and any other control station from which the main propelling machinery may be controlled.

(c) An engineers' alarm is to be provided to be operated from the engine control room or at the maneuvering platform as appropriate, and to be clearly audible in the engineers' accommodation.

1.6.11 Protection against noise

Measures are to be taken to reduce machinery noise in machinery spaces to acceptable levels as determined by the National Regulations of the country in which the ship is registered. If this noise cannot be sufficiently reduced the source of excessive noise is to be suitably insulated or isolated or a refuge from noise is to be provided if the space is required to be manned. Ear protectors are to be provided for personnel required to enter such spaces, if necessary.

1.6.12 Control and safety

Main and auxiliary machinery essential for the propulsion, control and safety of the ship are to be provided with effective means for its operation and control. All control systems essential for the propulsion, control and safety of the ship are to be independent or designed such that failure of one system does not degrade the performance of another system.

1.6.13 Operating and maintenance instructions for ship machinery and equipment

Operating and maintenance instructions and engineering drawings for ship machinery and equipment essential to the safe operation of the ship are to be provided and written in a language understandable by her officers and crew members who are required to understand such information in the performance of their duties.

1.7 Tests and Inspections

1.7.1 For the machinery built under the special survey during construction, the extent of supervision by the Society is to be as follows:

(a) Approval of constructional drawings and their calculations.

(b) Approval of proper materials used and their testing.

(c) Supervising proper execution of work and safe installation of machinery.

(d) Trial testing of machinery.

1.7.2 The machinery for ships classed or intended to be classed is normally to be tested and inspected in the presence of the Surveyor at the following occasions in accordance with the requirements of the Rules and the approved drawings:

(a) Material tests for component parts of machinery set out in the relevant Chapters of this Part.

(b) Confirmations of materials and components of machinery delivered from other manufacturers.

(c) Workmanship for machining from the commencement of work until the finish inspections for component parts of machinery.

(d) Tightness, balancing and non-destructive tests etc. for component parts of machinery set out in the relevant chapters of this Part.

(e) Shop trials of machinery.

(f) Installations of main propelling machinery, shafting, gearing and essential service auxiliaries, etc. on-board.

(g) On-board trials of machinery and essential systems.

When, however, the shop trials have been carried out and the trial requirements are fulfilled, the on-board trial may be modified suitably at the discretion of the Surveyor.

1.7.3 The Society will be prepared on application to adopt the alternative methods of inspection for the production line machinery and component parts subject to approval of manufacturer's production procedure and quality control.

1.7.4 Other tests and inspections not included in this Part may be required if deemed necessary by the Society.

1.7.5 Where the machinery or component parts of machinery have appropriate certificates, the tests and inspections may be wholly or partially dispensed with subject to further considerations and special approval by the Society.

1.8 Certification on Basis of Approved Quality Assurance Scheme for Machinery

1.8.1 Application

For machinery intended to be used for essential auxiliary services having an output of less than 750 kW, consideration will be given on application to the acceptance of standardized, batch and line produced machinery without tests and inspections of individual units subject to approval of the proposed designs and the manufacturer's quality control program.

1.8.2 Approval of works

A certificate will issued to each approved works, indicating the products for which approval has been granted.

1.8.3 Maintenance of approval

The Surveyors are to visit the works at intervals determined by the nature of the product, rate of production and standard of quality control arrangements. Maintenance of approval is to be subject to carrying out survey by regular and systematic auditing for the continuance of those details of supplies, organization, procedures and methods which form the basis for granting approval.

1.8.4 Certification of products

Nominated personnel of the manufacturer will be authorized by the Society to dispatch the products with certificates signed on behalf of the manufacturer to certify that the products conform to their design specifications and to the requirements of the Society. These certificates are to be countersigned by the Surveyor to certify that the approved arrangements are being kept under review by regular and systematic auditing of the manufacturing and quality control procedures.

1.8.5 Suspension or withdrawal of approval

When attention to significant faults or deficiencies in the manufacturing or quality control procedures have been drawn by the Surveyors, and these have not been rectified within a reasonable time, approval of the works will be suspended with notice in writing by the Society. When approval has been suspended and the manufacturer has proved unable or unwilling to take corrective action, approval will be withdrawn.

Chapter 2
Steam and Gas Turbines

2.1 General

2.1.1 Steam and gas turbines intended for main propelling and essential auxiliary service are to be constructed and installed in accordance with the following requirements under the supervision and to the satisfaction of the Surveyor.

2.1.2 These requirements are also to be complied with as far as they are applicable to exhaust gas turbine driving scavenge air blowers, turbo-compressors and turbo-chargers. Features of gas turbine machinery which are not included in this Chapter will be specially considered.

2.1.3 Steam and gas turbines driving electric propulsion generators are to be constructed and installed in accordance with the following requirements as well as the requirements stated in Chapter 13 of Part VII.

2.2 Drawings and Data

2.2.1 The turbine manufacturer is to submit the following drawings for approval:

Sectional assembly, casing, combustion chambers, gasifiers, regenerators or recuperators, turbine rotors together with compressor rotors including turbine discs and blading details, maneuvering and control arrangement, turbine installation details and main condensers as well as starting arrangement, fuel oil, lubricating, air inlet and exhaust systems for gas turbines.

2.2.2 The turbine manufacturer is to submit the following data together with drawings for approval: Shaft horsepower, revolutions, working pressure and working temperature corresponding to the maximum continuous output, mass and velocity of rotating element, critical speed of rotors, material specification, etc. for the purpose of checking calculated stresses, welding details and rotor stress calculations as well as calculations regarding the torsional vibration as stated in 6.8 of this Part.

2.3 Materials

2.3.1 Materials intended for the following component parts of turbines are to be tested and inspected in the presence of the Surveyor in accordance with the requirements of Part XI or to the requirements of the specifications approved in connection with the design: Rotors, discs, blades, diaphragms, casings and Group-I and Group-II pipes as classified in Part VI.

2.3.2 Turbine rotors and discs are generally to be of forged steel. Rotors for small turbines, however, may be made by a special casting process or by welding. Rotors and discs for gas turbines are to be made from materials non-corrodible in exhaust gases.

2.3.3 Turbine blades, shroud rings and binding wires are to be of non-corrodible materials.

2.3.4 Turbine casings and other castings subject to high pressure and temperature are to be of materials suitable for the stress and heat to which they may be exposed and are to be properly heat treated to remove internal stresses. Grey cast iron may be used for working parts with temperature up to 220°C.

2.4 Main Turbine Arrangement

2.4.1 Astern power

(a) The main propelling turbine installation is to be provided with the astern turbine which is constructed to provide the sufficient power to secure proper control of the ship in all normal circumstances. Accordingly, in the multi-screw installation, at least 2 astern turbines are to be provided.

(b) Astern turbines are to be able to develop, when operating astern under transient conditions, 80% of the rated ahead torque at 50% of the ahead revolutions and to maintain in free route astern 70% of the ahead revolutions for a period of at least 30 minutes without undue heating of the ahead turbines and condensers.

2.4.2 Steam supply

The steam supply maneuvering system is to be so arranged that the change-over from ahead to astern running is immediately available. However, this does not prevent the use of a guarding valve in the system if it is operable from the throttle location.

2.4.3 Emergency operation

The installation is to be so arranged that navigation with reduced power is possible in case of emergency. In single-screw ships having several turbine casings, the arrangement is to be such that steam can be directly led to the lower pressure turbine, and the high pressure or intermediate pressure turbine is to exhaust directly to the condenser. The emergency steam to the low pressure turbine is to be saturated or desuperheated.

2.4.4 Extraction steam

Where steam is extracted from the turbine, an efficient means is to be provided to prevent steam or water entering the turbine by way of the bleeder connections.

2.5 Construction

2.5.1 Turbine casings

(a) Turbine casings are to be so designed that bearings are not adversely affected by heat flow from adjacent hot parts of the turbine steam or gases.

(b) Guide vanes, diaphragms, labyrinth seals, etc. are to be arranged into the casing in such a way that they can expand freely without changing the position of their axes.

(c) The flange mating surface of turbine casing halves is to be metallically jointed. A thin layer of heat resistant flange cement may, however, be applied to the flange mating surface.

(d) Turbine casings are to be fitted with drains in places where water may collect. An effective steam strainer is to be placed ahead of the steam inlet valve or ahead of the maneuvering valve.

2.5.2 Diaphragms

Diaphragms are to be preheated before guide vane connections are welded, and annealed subsequent to the welding.

2.5.3 Rotors, discs and blades

(a) Turbine and compressor rotors and discs are to be so designed that excessive vibration does not occur within the operating range of speeds. It is recommended that overhung rotors operating with variable speeds are of under-critical design. Over-critical rotors may, however, be approved if running and trial tests give satisfactory results.

(b) Blades are to be so designed as to avoid abrupt change in section and to provide an ample amount of stiffness to minimize deflection and vibration, and to have sufficiently large axial and radial clearances so that no interference with the static member can occur including creep in the material.

(c) Smooth and sufficiently large radius fillets are to be provided at abrupt changes of section of rotors, discs and blades. Edges of holes in turbine discs and blades are to be finely machined and preferably polished at the highly stressed areas.

2.5.4 Bearings and lubrication

(a) Steam turbines are normally to be fitted with plain bearings. Small auxiliary turbines and exhaust gas blowers may, however, be approved with anti-friction bearings.

(b) An effective means is to be provided to prevent steam or condensate from entering the bearings. The bearings are to be so designed that the lubricant does not mix with the steam.

(c) Turbines intended for main propelling and driving generators are to be fitted with emergency arrangement by which lubricating oil is supplied to maintain adequate lubrication when lubrication oil supply is stopped in the event of the failure of lubricating pumps. Gravity head tanks or equivalent means may be accepted for this purpose. For lubrication system, see 2.7.2 and 2.7.3 of this Part and Part VI.

2.5.5 Expansion indicators

Indicators for determining the axial position of rotors relative to their casings and for showing the longitudinal expansion of casings at the sliding feet, if fitted, are to be provided for main turbines. The latter indicators are to be fitted at both sides and be readily visible.

2.5.6 Salt removal

Gas turbines intended for operation in salt atmospheres are to be fitted with an arrangement for removing or preventing the accumulation of salt deposits in compressors and turbines.

2.6 Strength Calculations

2.6.1 The following strength requirements are applicable to rotors, discs and blades for steam turbines.

2.6.2 Steam turbine rotors and discs

(a) The following strength requirements do not take into consideration the phenomena of creep and relaxation, and their application does not relieve the manufacturer from the responsibility for excessive creep or relaxation at normal operating temperatures.

(b) Strength calculations

(i) To calculate the elastic stresses and mean tangential stresses, assume:

R = 0 at the edge of the bore in solid rotors having inspection holes larger than 1/4 the basic diameter in way of the disc.

R = 0 at the bottom of the keyway in the bore for built-up disc.

R = T at the center for solid rotors having inspection holes smaller than 1/4 the basic diameter in way of the disc.

(ii) Assuming an adequate T at the starting point of each case as stated above, proceed step by step outward to the rim or bottom of the machined blade groove to calculate S and D at the step points for the determination of R and T at all points on the disc or drum section using the formula in (iii), and equalize R at the rim or bottom of machined blade groove to the total rim load. The rim load in this calculation is the total load due to blades, roots, and that portion of the rim which extends beyond the bottom of the groove, neglecting supporting effect in the rim.

(iii) Formula:

$$S_2 = (S_1 + \Delta S_1) + 52.0w(1+n)(V_1^2 - V_2^2)$$

$$D_2V_2^2 = (D_1 + \Delta D_1)V_2^2 + 26.0w(1-n)(V_2^4 - V_1^4)$$

$$R = \frac{S-D}{2}$$

$$T = \frac{S+D}{2}$$

$$\Delta S = (n+1)R\left(\frac{y_1}{y_2} - 1\right)$$

$$\Delta D = (n-1)R\left(\frac{y_1}{y_2} - 1\right)$$

$$T_m = \frac{114wN^2J}{A} + \frac{P}{2\pi A}$$

(iv) The stress at any point in the disc or drum section is not to exceed the allowable stress Y/F. If in the calculation it is found that R and T at any point so calculated have been exceeded, the calculation is to be repeated, assuming a value of T at the starting point sufficiently low to prevent the calculated stress from exceeding the allowable stress at any point.

(v) The notations used in 2.6.2(b)(i) to (iv) above are defined as follows:

R	=	Radial stress, in N/mm^2.
T	=	Tangential stress, in N/mm^2.
S	=	Sum of principal stresses, in N/mm^2.
D	=	Difference of principal stresses, in N/mm^2.
ΔS	=	Change in S caused by change in thickness.
ΔD	=	Change in D caused by change in thickness.
y_1 and y_2	=	Successive thickness of turbine disc at step points, in cm.
V	=	Tangential velocity at maximum continuous revolutions, in m/sec.
n	=	Poisson's ratio of turbine disc or rotor material.
w	=	Mass density of turbine disc or rotor material, in kg/cm^3.
T_m	=	Mean tangential stress, in N/mm^2.
A	=	Area of wheel profile, including the rim, on one side of axis of rotation, in cm^2.
N	=	Number of maximum continuous revolutions per minute divided by 1,000.
J	=	Moment of inertia of area A about the axis of rotation, in cm^4.
P	=	$114WN^2r$, in N.
W	=	Mass of blades and roots, in kg.
r	=	Radial distance to center of gravity of W from center line of shaft, in cm.
Y	=	Yield stress of material, in N/mm^2.
F	=	Factor of safety as given in Table IV 2-1.

Table IV 2-1
Factor of Safety for Steam Turbine Rotor Elastic Stress

Type of Rotor	Built-up		Solid	
	Propulsion	Auxiliary	Propulsion	Auxiliary
Radial Stress	2.5	2.25	2.5	2.25
Tangential Stress	2.5	2.25	2	3
Mean Tangential Stress (See Note)	3	3	3	3

Note: The mean tangential stress is, in no case, to be higher than the value obtained by the use of a factor of safety of 4 on the tensile strength.

2.6.3 Steam turbine blades

(a) The following formula is based solely upon centrifugal stress considerations and its application does not relieve the manufacturer from responsibility for the presence of dangerous vibrations in the installation at speeds within the operating range.

(b) The sectional area at the root of the blade is not to be less than that obtained by the following formula:

$$A = \frac{4.395WN^2r}{U}$$

(c) The notations used in 2.6.3(b) above are defined as follows:

A = Minimum sectional area at root of blade, in cm^2.
W = Total mass of one blade, in kg.
r = Radial distance to center of gravity of blade from center line of shaft, in cm.
U = Minimum tensile strength of material or optionally 2 Y, in N/mm^2.
N and Y are as specified in 2.6.2 of this Part.

2.7 Safety Devices and Control Equipment of Steam Turbines

2.7.1 Governors and speed control

(a) All main and auxiliary turbines are to be provided with overspeed protective devices to prevent the design speed from being exceed by more than 15%. Where two or more turbines are coupled to the same gear wheel set, the Society may agree that only one overspeed protective device be provided for all the turbines.

(b) Arrangement is to be provided for shutting off the steam to the main turbines by suitable hand trip gear situated at the maneuvering stand and at the turbine itself. Hand tripping for auxiliary turbines is to be arranged in the vicinity of the turbine overspeed protective device.

(c) Where the main turbine installation incorporates a reverse gear, electric transmission, controllable pitch propeller or other free-coupling arrangement, a separate speed governor in addition to the overspeed protective device is to be fitted and is to be capable of controlling the speed of the unloaded turbine without bringing the overspeed protective device into action.

(d) Where exhaust steam from auxiliary systems is led to the main turbine it is to be cut off at activation of the overspeed protective device.

(e) Auxiliary turbines driving electric generators are to have both:
A speed governor which, with fixed setting, is to control the speed within the limit of 10% for momentary variation and 5% permanent variation when the full load is suddenly taken off, and an overspeed protective device which is to be independent of speed governor, and is to prevent the design speed from being exceeded by more than 15% when the full load is suddenly taken off.

2.7.2 Miscellaneous safety arrangements

(a) Main ahead turbines are to be provided with a quick acting device which will automatically shut off the steam or fuel supply in the case of dangerous lowering of oil pressure in the bearing lubricating system. This device is to be so arranged as not to prevent the admission of steam to the astern turbine for braking purposes. Where deemed necessary by the Society appropriate means are to be provided to protect the turbines in case of:
(i) abnormal axial rotor displacement,
(ii) excessive condenser pressure, and
(iii) high condensate level.

(b) Auxiliary turbines having governors operated other than hydraulically in which the lubricating oil is inherent in the system, are to be provided with an alarm device and a means of shutting off the steam supply in the case of lowering of oil pressure in the bearing lubricating oil system.

(c) Main turbines are to be provided with a satisfactory emergency supply of lubricating oil which will come into use automatically when the pressure drops below a predetermined value. The emergency supply may be obtained from a gravity tank containing sufficient oil to maintain adequate lubrication until the turbine is brought to rest or by equivalent means. If emergency pumps are used these are to be so arranged that their operation is not affected by failure of the power supply. Suitable arrangement for cooling the bearings after stopping may also be required.

(d) A sentinel valve or equivalent is to be provided at the exhaust end of all turbines. The valve discharge outlets are to be visible and suitably guarded if necessary. When, for auxiliary turbines, the inlet steam pressure exceeds the pressure for which the exhaust casing and associated piping up to exhaust valve are designed, means to relieve the excess pressure are to be provided.

(e) Non-return valves, or other approved means which will prevent steam and water returning to the turbines, are to be fitted in bled steam connections.

(f) Efficient steam strainers are to be provided close to the inlets to ahead and astern high pressure turbines or alternatively at the inlets to maneuvering valves.

2.7.3 Control equipment

(a) The main propelling turbine is to be provided with the necessary maneuvering and control equipment (See. 1.6.9(b) of this Part.). At least the following equipment is to be provided:

(i) Pressure gauges and thermometers for the steam condition:

(1) before the maneuvering valve,

(2) before entering the turbine,

(3) inside the turbine casing,

(4) after leaving the turbine,

(5) before entering the condenser, and

(6) at the extraction stage and intermediate steam supply stage.

(ii) Tachometer and direction indicator

Pressure gauges and thermometers for the lubricating and control oil.

(b) Auxiliary turbines are to be provided with the equipment in accordance with 2.7.3(a) above which is applicable.

(c) Alarm

(i) The main propelling and auxiliary turbines are to be provided with audible and visible alarms for the following emergency conditions:

(1) High pressure in condenser.

(2) Failure in lubricating system.

(ii) The alarms for the following emergency conditions are also recommended as far as practicable:

(1) High condensate level.

(2) Salinity of condensate.

(3) Excessive axial displacement of rotor.

(4) Turbine overspeed, if the unit is not fitted with speed regulator.

(5) Turning gear engaged.

2.8 Safety Devices of Gas Turbines

2.8.1 Governors and overspeed protective devices

(a) All main and auxiliary gas turbines are to be provided with speed control governors (or overspeed governors) and separate overspeed protective devices. The overspeed protective devices are to be independent from the governors and so adjusted that the output shaft speed may not be exceeded by more than 15% of the maximum continuous speed, and are to have functions as specified in 2.8.2 (b).

(b) The governors of gas turbines to drive generators are to conform to the requirements in 3.2 of Part VII.

2.8.2 Emergency stopping devices

(a) Gas turbines are to be provided with emergency stopping devices operated by suitable hand trip gears installed at the control station.

(b) Gas turbines are to be provided with automatic fuel oil shut-off devices that operate in the following cases. In addition, means are to be provided so that alarms will be issued at the control station when the automatic fuel oil shut-off devices come into action.

(i) Overspeed.

(ii) Low lubricating oil pressure.

(iii) Failure in automatic starting.

(iv) Flame-out.

(v) Excessive vibrations.

2.8.3 Alarms

Gas turbines are to be provided with alarm devices that operate in the following cases:

(a) High temperature of turbine inlet or outlet gas.

(b) Low lubricating oil pressure (working before the function of the emergency stopping device specified in preceding 2.8.2).

(c) Low fuel oil supply pressure.

2.9 Tests and Inspections

2.9.1 Hydraulic pressure tests

Hydraulic pressure tests on turbine parts after machining are to be carried out in the presence of the Surveyor under the conditions specified in Table IV 2-2.

Table IV 2-2
Hydraulic Pressure Tests on Turbine Parts

Parts to be Tested	Test Pressure	Remarks
Turbine casings(1)	1.5 W	At least 0.2
H.P. turbine steam chests	1.5 W	
Steam receiver pipes	See Note (2)	
Steam, maneuvering and control valve chests, and steam strainers	2 W	
Cooling water spaces	1.5 W	At least 0.4
Condensers and heat exchangers	See Part V	
Group-I and -II pipes and fittings	See Part VI	
Where: W = Maximum working pressure for the respective parts, in MPa.		

Notes:

(1) Test pressure for exhaust gas turbine casings, see Table IV 3-3.

(2) Same test pressure as the casing which it is connected.

2.9.2 Balancing tests

Finished rotors, complete with balanced and all the rotating parts, are to be dynamically balanced in the presence of the Surveyor.

2.9.3 Thermal stability test

Forged or welded rotors for propulsion turbines, which are subjected to steam temperatures above 400°C, are to undergo a thermal stability test. This test may be carried out after rough machining and heat treatment, or at any subsequent stage

in the production. The rotor temperature during the test is to be at least 30°C above maximum operating temperature of the rotor, but not above the tempering temperature for the rotor material.

2.9.4 Non-destructive tests

The following turbine parts are to be tested in the presence of the Surveyor by approved non-destructive testing methods:

(a) Turbine casing – at abrupt changes of sections and at points liable to casting faults.

(b) Diaphragm – guide vanes and welded connections.

(c) Turbine rotor, disc, blading, welded connections and shrink surfaces – over the complete surfaces and fillets.

2.9.5 Shop trials

(a) For steam turbines, operational trials are to be satisfactorily carried out at the manufacturer's workshop with their most suitable facilities available in the present of the Surveyor.

(b) The warm running tests on the bladed exhaust gas turbine are to extend over a period of 20 minutes at the working speed and 10 minutes at a speed 10% above the maximum working speed.

(c) The overspeed protective device is to be set not more than 15% above the maximum design speed.

(d) On completion of the above shop trials, turbines are to be overhauled and inspected for fineness, wear, clearances on major working parts, securities of locking devices, etc. in the presence of the Surveyor.

2.9.6 On-board trials

(a) After installation on-board, the main propelling and essential auxiliary turbines are to be trial tested under working conditions in the presence of the Surveyor to demonstrate that the entire installation is working satisfactorily without undue vibrations of hull or turbines within the service range. For this purpose, the following trials on-board are normally to be carried out as far as practicable.

(b) For main propelling turbines, rated maximum continuous revolutions for at least 2 hours, corresponding revolutions of partial loads of the turbine rated output in ahead running and astern running for suitable durations, minimum speed and safety device tests are normally to be carried out.

(c) For turbines intended for auxiliary purposes, they are to be run at the maximum continuous output for at least 3 hours, and partial and overloads for suitable durations if deemed necessary by the Surveyor. These load tests may be based on the power of driven auxiliary.

(d) On completion of the above on-board trials, the turbine, to the discretion of the Surveyor, may be opened up for inspection to a certain extent as deemed necessary.

Chapter 3

Diesel Engines

3.1 General

3.1.1 The construction and installation of diesel engines for main propelling and essential service are to be carried out in accordance with the following requirements under the supervision and to the satisfaction of the Surveyor.

3.1.2 Diesel engines which drive electric propulsion generators are to be constructed and installed in accordance with the following requirements as well as the requirements stated in 3.2 of Part VII.

3.1.3 The diesel engine intended for emergency electric source is also to comply with the requirements stated in Chapter 11 of Part VII.

3.1.4 Each marine diesel engine with a power output of more than 130 kW installed on a ship is to comply with the requirements of Reg. 13 of MARPOL Annex VI and NO_x Technical Code 2008, as amended.

3.2 Drawings and Data

3.2.1 The drawings and documents of diesel engine listed in Table IV 3-1 as below are to be submitted for approval, as applicable.

3.2.2 The drawings and documents of diesel engine listed in the Table IV 3-2 as below are to be submitted for information, as applicable.

3.3 Materials

3.3.1 Materials intended for the component parts of diesel engines are to be tested and inspected in the presence of the Surveyor in accordance with the requirements of Part XI or with the requirements of the specification approved in connection with the design as listed in 3.10.2 of this Chapter.

3.3.2 Engine parts subject to stress are to be made of sound materials, and cylinders, cylinder liners, cylinder covers, pistons, etc. under high temperature or pressure are to be made of materials suitable for the stress and temperature to which they are exposed.

3.4 Construction

3.4.1 General

(a) Frames and bedplates are to be of rigid and oil-tight construction. Crank cases are to be strongly built and doors or covers securely fastened and made air and oiltight so that they can withstand a considerable excessive pressure within the crank cases without any risk of damage.

(b) Passages for cooling water and lubricating oil are to be carefully cleaned of sand and scale.

(c) Clutches or reversing gear built in engines are to be in accordance with the requirements stated in Chapter 5 of this Part.

Table IV 3-1
Drawings and Documents to be Submitted for Approval

No.	Item
1	Bedplate and crankcase of welded design, with welding details and welding instructions(1)(2)
2	Thrust bearing bedplate of welded design, with welding details and welding instructions(1)
3	Bedplate/oil sump welding drawings(1)
4	Frame/framebox/gearbox of welded design, with welding details and instructions(1)(2)
5	Engine frames, welding drawings(1)(2)
6	Crankshaft, details, each cylinder No.
7	Crankshaft, assembly, each cylinder No.
8	Crankshaft calculations (for each cylinder configuration)
9	Thrust shaft or intermediate shaft (if integral with engine)
10	Shaft coupling bolts
11	Material specifications of main parts with information on non-destructive material tests and pressure tests(3)
12	Schematic layout or other equivalent documents on the engine of Starting air system, Fuel oil system, Lubricating oil system, Cooling water system, Hydraulic system, Hydraulic system (for valve lift), Engine control and safety system
13	Shielding of high pressure fuel pipes, assembly(4)
14	Construction of accumulators (for electronically controlled engine)
15	Construction of common accumulators (for electronically controlled engine)
16	Arrangement and details of the crankcase explosion relief valve(5)
17	Calculation results for crankcase explosion relief valves
18	Details of the type test program and the type test report(7)
19	High pressure parts for fuel oil injection system(6)
20	Oil mist detection and/or alternative alarm arrangements
21	Details of mechanical joints of piping systems
22	Documentation verifying compliance with inclination limits
23	Documents as required in IACS UR E22, as applicable

Notes:

(1) For approval of materials and weld procedure specifications. The weld procedure specification is to include details of pre and post weld heat treatment, weld consumables and fit-up conditions.

(2) For each cylinder for which dimensions and details differ.

(3) For comparison with the Society requirements for material, NDT and pressure testing as applicable.

(4) All engines.

(5) Only for engines of a cylinder diameter of 200 mm or more or a crankcase volume of 0.6 m^3 or more.

(6) The documentation to contain specifications for pressures, pipe dimensions and materials.

(7) The type test report may be submitted shortly after the conclusion of the type test.

Table IV 3-2
Drawings and Documents to be Submitted for Information

No.	Item
1	Engine particulars (e.g. Data sheet with general engine information, Project Guide, Marine Installation Manual)
2	Engine cross section
3	Engine longitudinal section
4	Bedplate and crankcase of cast design
5	Thrust bearing assembly(1)
6	Frame/framebox/gearbox of cast design(2)
7	Tie rod
8	Connecting rod
9	Connecting rod, assembly(3)
10	Crosshead, assembly(3)
11	Piston rod, assembly(3)
12	Piston, assembly(3)
13	Cylinder jacket/ block of cast design(2)
14	Cylinder cover, assembly(3)
15	Cylinder liner
16	Counterweights (if not integral with crankshaft), including fastening
17	Camshaft drive, assembly(3)
18	Flywheel
19	Fuel oil injection pump
20	Shielding and insulation of exhaust pipes and other parts of high temperature which may be impinged as a result of a fuel system failure, assembly
21	For electronically controlled engines, construction and arrangement of Control valves, High-pressure pumps, Drive for high pressure pumps
22	Operation and service manuals(4)
23	FMEA (for engine control system)(5)
24	Production specifications for castings and welding (sequence)
25	Evidence of quality control system for engine design and in service maintenance
26	Quality requirements for engine production
27	Type approval certification for environmental tests, control components(6)

Notes:

(1) If integral with engine and not integrated in the bedplate.

(2) Only for one cylinder or one cylinder configuration.

(3) Including identification (e.g. drawing number) of components.

(4) Operation and service manuals are to contain maintenance requirements (servicing and repair) including details of any special tools and gauges that are to be used with their fitting/settings together with any test requirements on completion of maintenance.

(5) Where engines rely on hydraulic, pneumatic or electronic control of fuel injection and/or valves, a failure mode and effects analysis (FMEA) is to be submitted to demonstrate that failure of the control system will not result in the operation of the engine being degraded beyond acceptable performance criteria for the engine. The FMEA reports required will not be explicitly approved by the Society.

(6) Tests are to demonstrate the ability of the control, protection and safety equipment to function as intended under the specified testing conditions per IACS UR E10.

3.4.2 Cylinder relief valves

A relief valve set to relieve at not more than 140% of the designed maximum firing pressure is to be fitted on each cylinder when the cylinder bore exceeds 230 mm. For auxiliary engines, an approved device capable of giving warning of excessive cylinder pressure will be specially considered as an alternative. Outlet ports of cylinder relief valves are to be so placed as to avoid endangering personnel.

3.4.3 Crankcase explosion relief valves

(a) Crankcases are to be provided with lightweight spring loaded relief valves or other quick-acting and self-closing devices able to lift rapidly in order to prevent any considerable excessive pressure within the crankcase in the event of internal explosion and to close automatically after the passage of the explosion wave in order to prevent any inrush of external air. Relief valves are to be so designed that the discharge from valves is shielded by flame trap to minimize the possibility of danger and damage arising from the emission of flame, and the operation of the valves is to be actuated by an excessive pressure as low as possible with 0.02 MPa to be the maximum.

(b) Generally, in large engines at least one relief valve is to be fitted to each cylinder crankcase and separate gear or chain case for camshaft or similar drive, when the gross volume of such space is 0.6 m^3 and above. In small engines where there is free communication between all cylinder crankcases, relief valves are to be provided in numbers not less than those given in Table IV 3-3. Where only 2 relief valves are required, they are to be located at or near each end of the crankcase. In V-type cylinder arrangement engines, half the number of cylinders may generally be taken in using this table. In engines having a cylinder of less than 200 mm bore or having a crankcase volume of less than 0.6 m^3, relief valves may be omitted.

Table IV 3-3
Crankcase Explosion Relief Valves

Cylinder Bore D (mm)	No. of Cylinders per Engine	Min. Number of Explosion Relief Valves per Engine
200 ≤ D < 250	≤ 8	2
	> 8	3
250 ≤ D < 300	Any number	One for each alternate cylinder, See Note
300 ≤ D	Any number	One per cylinder

Note: For engines having 3, 5, 7, 9 etc. cylinders, the number of explosion relief valves is not to be less than 2, 3, 4, 5 etc. respectively.

(c) The minimum free area of crankcase explosion relief valves is to be determined as follows:

$$A = \frac{CV}{Z}$$

where:

A = Minimum free area of each explosion relief valve, in cm^2, but not less than 45 cm^2.

V = Total gross volume of crankcase compartment, in m^3. The volume of stationary parts within the crankcase may be deducted.

Z = Number of explosion relief valves fitted to each engine, which is to be not less than given in Table IV 3-3.

C = 115 for engines with a free communication crankcase, and
50 for crosshead type engines with a diaphragm fitted between the cylinder and a crankcase.

3.4.4 Protection against scavenging spaces

(a) Crosshead type engine scavenging spaces in open connection to the cylinders are to be provided with explosion relief valves. These devices are to be so arranged to discharge that no damage for operators can occur.

(b) Crosshead type engine scavenging spaces in open connection to the cylinders are to be connected to an approved fire extinguishing system, which is to be entirely separate from the fire extinguishing system of the engine room.

3.4.5 Crankcase Oil Mist Detection Arrangements

(a) Crankcase oil mist detection arrangements are required for diesel engines of 2250 kW maximum continuous power and above or having cylinders of more than 300 mm bore, and in cases of engine failure, the following means are automatically employed. However, in cases where alternative devices (e.g. engine bearing temperature monitors or equivalent devices) deemed appropriate by the Society are provided, such devices may be used instead of crankcase oil mist detection arrangements.

(i) In the case of low speed (crosshead) engines, alarms are to activate, and speed be reduced automatically or manually.

(ii) In the case of medium/high speed (trunk piston) engines, alarms are to activate and diesel engines are to be stopped or have their fuel supply shut off automatically.

Note: For the purpose of this requirement, the following definitions apply:

(1) Low speed engines means diesel engines having a rated speed of less than 300 rpm.

(2) Medium speed engines means diesel engines having a rated speed of 300 rpm and above, but less than 1400 rpm.

(3) High speed engines means diesel engines having a rated speed of 1400 rpm and above.

(b) The crankcase oil mist detection arrangements required in 3.4.5(a) above are to be of an approved type and in accordance with the following requirements:

(i) The oil mist detection arrangements are to provide an alarm indication in the event of a foreseeable functional failure in the equipment and installation arrangements.

(ii) The oil mist detection arrangements are to provide an indication that any lenses fitted in the equipment and used in determination of the oil mist level have been partially obscured to a degree that will affect the reliability of the information and alarm indication.

(iii) The oil mist detection arrangements are to be capable of being tested on the test bed and board under engine at standstill and running at normal operating conditions.

(iv) Oil mist detection and alarm information is to be capable of being read from a safe location away from engine.

(v) In the case of ships which apply the rules for automatic or remote control and monitoring system, the density of crankcase oil mist is also to be capable of being monitored, as specified in Table VIII 4-5A, VIII 4-5B and VIII 4-7 of Part VIII.

(vi) Each engine is to be provided with its own independent oil mist detection arrangement and a dedicated alarm.

(vii) The layout of the arrangements, pipes and cables, pipe dimensions, the location of engine crankcase sample points, sample extraction rate and the way of maintenance and test are to be in accordance with the engine designer's and oil mist manufacturer's instructions.

(viii) Where sequential oil mist detection arrangements are provided, the sampling frequency and time is to be as short as reasonably practicable.

(ix) A copy of the maintenance and test manual is to be provided on board ship.

3.4.6 Crankcase ventilation

(a) If provisions are made for ventilation of enclosed crankcases by means of breathers or mechanical suctions, the corresponding suction pressure is not to exceed 25 mm of water. Crankcases are not to be ventilated by a blast of air.

(b) Where a breather is provided connecting any part of the crankcase, this breather is to have a dimension as small as practicable to minimize the inrush of air after an explosion and is to be led to a safe position on deck or other approved position.

(c) Crankcase lubricating oil pipes from engine sumps to their respective drain tanks are to be submerged at their outlet ends. Where 2 or more engines are installed, the pipes leading to crankcases as well as breathers and lubricating oil pipes are to be laid independently of one another to avoid intercommunication between the crank-cases.

3.4.7 Warning notice

A notice of warning is always to be fitted either on the control stand or, preferably, on a discernible place near the crankcase door on both sides of the engine specifying that the crankcase doors or sight holes are not to be opened within a reasonable period which is normally not less than 10 minutes after stopping the engine in case overheat is suspected within the crankcase.

3.4.8 Speed governor and overspeed protective device of main diesel engines

(a) Each main engine is to be fitted with a speed governor so adjusted that the engine speed cannot exceed the rated speed by more than 15%.

(b) In addition to this speed governor each main engine having a rated power of 220 kW and above, and which can be declutched or which drives a controllable pitch propeller, is to be fitted with a separate overspeed protective device, which including its driving mechanism, has to be independent from the governor required in 3.4.8 (a) above, and so adjusted that the engine speed cannot exceed by more than 20% of the maximum continuous revolutions. Equivalent arrangements may be accepted upon special consideration.

(c) When electronic speed governors of main diesel engines form part of a remote control system, they are to comply with the following condition:

(i) if lack of power to the governor may cause major and sudden changes in the present speed and direction of thrust of the propeller, back-up power supply is to be provided;

(ii) local control of the engines is always to be possible, and, to this purpose, from the local control position it is to be possible to disconnect the remote signal, bearing in mind that the speed control, is not available unless an additional separate governor is provided for such local mode of control.

(d) In addition, electronic speed governors and their actuators are to be type tested.

3.4.9 Speed governor, overspeed protective and governing characteristics of generator prime movers

(a) For overspeed protective device, see 3.4.8(b) above, and so adjusted that the speed may not be exceeded by more than 15% of the maximum continuous revolutions.

(b) For speed governor characteristics of generator prime movers, see Chapter 3 of Part VII.

3.5 Crankshafts

3.5.1 General

(a) Scope

The Rules for the scantling of crankshafts are to be applied to diesel engines for main propulsion and auxiliary purposes, where the engines are being so designed as to be capable of continuous operation at their rated power when running at rated speed.

(b) Field of application

The Rules apply only to solid-forged and semi-built crankshafts of forged or cast steel, with one crank throw between main bearings.

(c) Principles of calculation

The scantlings of crankshafts are based on an evaluation of safety against fatigue in the highly stressed areas.

The calculation is also based on the assumption that the fillet transitions between the crankpin and web as well as between the journal and web are the areas exposed to the highest stresses. The outlets of oil bores

into crankpins and journals are to be formed in such a way that the safety margin against fatigue at the oil bores is not less than that acceptable in the fillets. The engine manufacturer, if requested by the Society, is to submit a documentation supporting his oil bore design. Calculation of crankshaft strength consists initially in determining the nominal alternating bending and nominal alternating torsional stresses which, multiplied by the appropriate stress concentration factors using the theory of constant energy of distortion (von Mises' Criterion), result in an equivalent alternating stress (uni-axial stress). This equivalent alternating stress is then compared with the fatigue strength of the selected crankshaft material. This comparison will then show whether or not the crankshaft concerned is dimensioned adequately.

(d) Drawings and particulars to be submitted

For the calculation of crankshafts, the documents and particulars listed in the following are to be submitted:

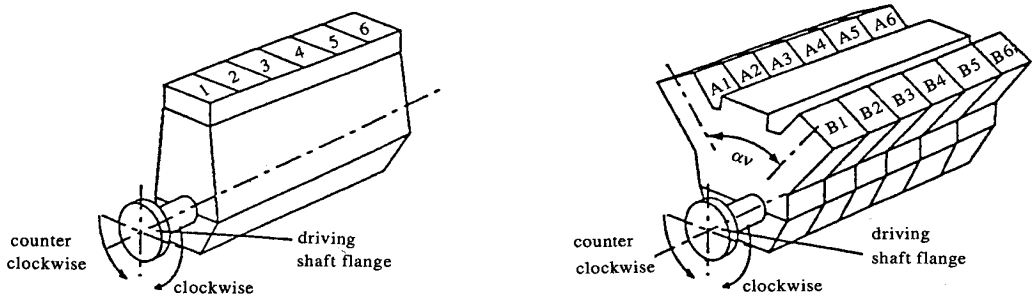

Fig. IV 3-1
Designation of the Cylinders

(i) crankshaft drawing which must contain all data in respect of the geometrical configuration of the crankshaft.

(ii) type designation and kind of engine (in-line engine or V-type engine with adjacent connecting rods, forked connecting rod or articulated-type connecting rod).

(iii) operating and combustion method (2-stroke or 4-stroke cycle/direct injection, pre combustion chamber, etc.).

(iv) number of cylinders.

(v) rated power (kW).

(vi) rated engine speed (1/min).

(vii) sense of rotation (see Fig. IV 3-1).

(viii) firing order with the respective ignition intervals and, where necessary, V-angle α_v (see Fig. IV 3-1).

(ix) cylinder diameter (mm).

(x) stroke (mm).

(xi) maximum cylinder pressure P_{max} (bar).

(xii) charge air pressure (bar) (before inlet valves or scavenge ports, whichever applies).

(xiii) nominal compression ratio.

(xiv) connecting rod length L_H (mm).

(xv) oscillating weight of one crank gear (kg) (in case of V-type engines, where necessary, also for the cylinder unit with master and articulated-type connecting rod or forked and inner connecting rod.).

(xvi) digitalized gas pressure curve presented at equidistant intervals (bar versus crank angle) intervals equidistant and integrally divisible by the V-angle, but not more than 5° CA.

(xvii) for engines with articulated-type connecting rod (see Fig. IV 3-2)

(1) distance to link point L_A (mm).

(2) link angle α_N(°).

(3) connecting rod length L_N (mm).

(xviii) for the cylinder with articulated-type connecting rod

(1) maximum cylinder pressure P_{max} (bar).

(2) charge air pressure (bar) (before inlet valves or scavenge ports, whichever applies.).

(3) nominal compression ratio.

(4) digitalized gas pressure curve presented at equidistant intervals (bar versus crank angle);

(xix) details of crankshaft material;

(xx) material designation;

(xxi) mechanical properties of material;

The minimum requirements of Rule's materials must have been complied with:

(1) tensile strength (N/mm^2);

(2) yield strength (N/mm^2);

(3) reduction in area at break (%);

(4) elongation A_5 (%);

(5) impact energy – KV (J);

(xxii) method of material melting process(open-hearth furnace, electric furnace, etc.);

(xxiii) type of forging (free form forged, continuous grain flow forged, drop-forged, etc.; with description of the forging process);

(xxiv) heat treatment;

(xxv) surface treatment of fillets, journals and pins (induction hardened, flame hardened, nitrided, rolled, shot peened, etc. with full details concerning hardening);

(1) hardness at surface (HV);

(2) hardness as a function of depth (mm);

(3) extension of surface hardening;

(xxvi) particulars for alternating torsional stresses, see item 3.5.2(b).

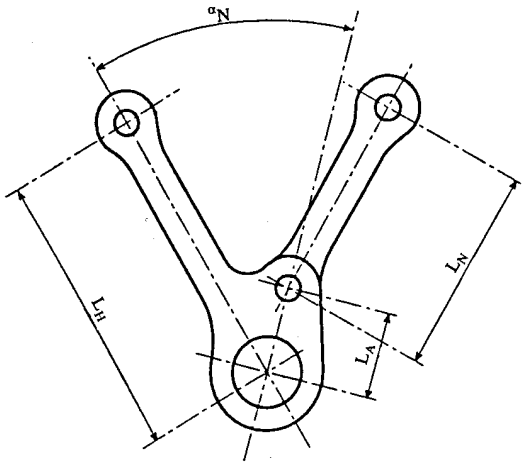

Fig. IV 3-2
Articulated-Type Connecting Rod

3.5.2 Calculation of stresses

(a) Calculation of alternating stresses due to bending moments and shearing forces

(i) Assumptions

The calculation is based on a statically determined system, so that only one single crank throw is considered of which the journals are supported in the center of adjacent bearings and which is subject to gas and inertia forces. The bending length is taken as the length between the two main bearings (distance L_3), see Figures IV 3-3 and IV 3-4. The nominal bending moment is taken as the bending moment in the crank web cross-section in the center of the solid web (distance L_1) basing on a triangular bending moment load due to the radial components of the connecting rod force. For crank throws with two connecting rods acting upon one crankpin the nominal bending moment is taken as a bending moment obtained by superposition of the two triangular bending moment loads according to phase. The

nominal alternating stresses due to bending moments and shearing forces are to be related to the cross-sectional area of the crank web. This reference area of cross-section results from the web thickness W and the web width B in the center of the overlap of the pins or, if appropriate, at the center of the adjacent generating lines of the two pins if they do not overlap, see Fig. IV 3-5. Nominal mean bending stresses are neglected.

(ii) Calculation of nominal alternating bending and shearing stresses

As a rule the calculation is carried out in such a way that the individual radial forces acting upon the crank pin owing to gas and inertia forces will be calculated for all crank positions within one working cycle. A simplified calculation of the radial forces may be used as the discretion of the Society. By means of these radial forces variable in time within one working cycle and taking into account the distance of acting position on the pin, the time curve of the bending moment M_B in the web center as defined in 3.5.2(a)(i) will then be calculated.
The decisive nominal alternating bending moment will then be calculated

$$M_{BN} = \pm\frac{1}{2}\left(M_{B,max} - M_{B,min}\right)$$

and, from the latter, the nominal alternating bending stress which will be modified by the empirical factor K_e which considers to some extent the influence of adjacent cranks and bearing restraint.

$$\sigma_{BN} = \pm\frac{M_{BN}}{W_{eq}} \cdot 10^3 \cdot K_e$$

$$W_{eq} = \frac{B \cdot W^2}{6}$$

K_e = 8 for 2-stroke engines

= 1.0 for 4-stroke engines

In case of V-type engines, the bending moments, progressively calculated from the gas and inertia forces, of the two cylinders acting on one crank throw are superposed according to phase, the differing designs (forked connecting rod, articulated-type connecting rod or adjacent connecting rods) being taken into account. Where there are cranks of different geometrical configuration (e.g., asymmetric cranks) in one crankshaft, the calculation is to cover all crank variants.

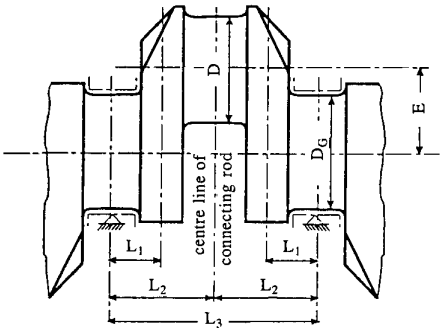

Fig. IV 3-3
Crank Throw for In-Line Engine

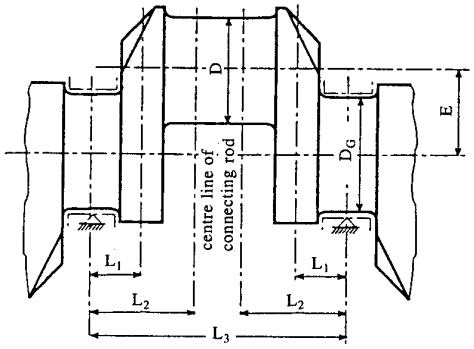

Fig. IV 3-4
Crank Throw for Engine with 2 Adjacent Connecting Rods

The calculation of the nominal alternating shearing stress is as follows:

$$\sigma_{QN} = \pm \frac{Q_N}{F} \cdot K_e$$
$$Q_N = \pm \frac{1}{2}(Q_{max} - Q_{min})$$
$$F = B \cdot W$$

where:

M_{BN}	=	Nominal alternating bending moment (Nm);
σ_{BN}	=	Nominal alternating bending stress (N/mm^2);
W_{eq}	=	Equatorial moment of resistance related to cross-sectional area of web (mm^3);
Q_N	=	Nominal alternating shearing force (N);
σ_{QN}	=	Nominal alternating stress due to shearing force (N/mm^2);
F	=	Area related to cross-section of web (mm^2).

(iii) Calculation of alternating bending stresses in fillets

The calculation of stresses is to be carried out for the crankpin fillet as well as for the journal fillet.

(1) For the crankpin fillet

$\sigma_{BH} = \pm(\alpha_B \cdot \sigma_{BN})$

where:

σ_{BH} = Alternating bending stress in crankpin fillet (N/mm^2);

α_B = Stress concentration factor for bending in crankpin fillet (determination see 3.5.3).

(2) For the journal fillet

$\sigma_{BG} = \pm(\beta_B \cdot \sigma_{BN} + \beta_Q \cdot \sigma_{QN})$

where:

σ_{BG} = Alternating stresses in journal fillet (N/mm^2);

β_B = Stress concentration factor for bending in journal fillet (determination see 3.5.3);

β_Q = Stress concentration factor for shearing (determination see 3.5.3).

(b) Calculation of alternating torsional stresses

(i) General

The calculation for nominal alternating torsional stresses is to be undertaken by the engine manufacturer according to the information contained in 3.5.2(b)(ii). The maximum value obtained from such calculations will be used by the Society when determining the equivalent alternating stress, according to 3.5.5. In the absence of such a maximum value it will be necessary for Society to incorporate a fixed value in the calculation for the crankshaft dimensions on the basis of an estimation.

(ii) Calculation of nominal alternating torsional stresses

The max. and min. alternating torques are to be ascertained for every mass point of the system and for the entire speed range by means of a harmonic synthesis of the forced vibration from the 1st order up to and including the 15th order for 2-stroke cycle engines and from the 0.5th order up to and including the 12th order for 4-stroke cycle engines. Whilst doing so, allowance must be made for the dampings that exist in the system and for unfavorable conditions (misfiring in one of the cylinders). The speed stages are to be selected in such a way that the transient response can be recorded with sufficient accuracy. The values received for such calculations are to be submitted. The nominal alternating torsional stress in every mass point, which is essential to the assessment, results from the following equation:

$$\tau_N = \pm \frac{M_T}{W_P} \cdot 10^3$$

$$M_T = \pm \frac{1}{2}(M_{Tmax} - M_{Tmin})$$

$$W_P = \frac{\pi}{16}\left(\frac{D^4 - D_{BH}^4}{D}\right)$$

or

$$W_P = \frac{\pi}{16}\left(\frac{D_G^4 - D_{BG}^4}{D_G}\right)$$

where:

τ_N	=	Nominal alternating torsional stress referred to crankpin or journal (N/mm^2);
M_T	=	Nominal alternating torque (Nm);
W_P	=	Polar moment of resistance related to cross-sectional area of bored crankpin or bored journal (mm^3);
M_{Tmax}, M_{Tmin}	=	Extreme values of the torque with consideration of the mean torque.

The assessment of the crankshaft is based on the torsional stress which in conjunction with the associated bending stress, results in the lowest acceptability factor. Where barred speed ranges are necessary, the torsional stresses within these ranges are to be neglected in the calculation of the acceptability factor. Barred speed ranges are to be so arranged that satisfactory operation is possible despite of their existence. These are to be no barred speed ranges above a speed ration of $\lambda \geq 0.8$ of the rated speed. The approval of crankshafts is to be based on the installation having the lowest acceptability factor. Thus, for each installation, it is to be ensured by suitable calculation that the approved nominal alternating torsional stress is not exceeded. This calculation is to be submitted for assessment.

(iii) Calculation of alternating torsional stresses in fillets

The calculation of stresses is to be carried out for both the crankpin and the journal fillet.

(1) For the crankpin fillet:

$$\tau_H = \pm (\alpha_T \cdot \tau_N)$$

where:

τ_H	=	Alternating torsional stress in crankpin fillet (N/mm^2);
α_T	=	Stress concentration factor for torsion in crankpin fillet (determination see 3.5.3).

(2) For the journal fillet:

$$\tau_G = \pm (\beta_T \cdot \tau_N)$$

Where:

τ_G	=	Alternating torsional stress in journal fillet (N/mm^2).
β_T	=	Stress concentration factor for torsion in journal fillet (determination see 3.5.3).

3.5.3 Calculation of stress concentration factors

(a) General

The stress concentration factors for bending (α_B, β_B) is defined as the ratio of the maximum bending stress-occurring in the fillets under bending load acting in the central cross-section of a crank-to the nominal stress related to the web cross-section. The nominal stress has to be determined under the bending moment in the middle of the solid web.

The stress concentration factor for torsion (α_T, β_T) is defined as the ratio of the maximum torsional stress-occurring under torsional load in the fillets-to the nominal stress related to the bored crankpin or journal cross-section. The stress concentration factor for shearing (β_Q) is defined as the ratio of the maximum shear stress-occurring in the journal fillet under bending load-to the nominal shear stress related to the web cross-section. Where the stress concentration factors cannot be furnished by reliable measurements the values may be evaluated by means of the formulae according to 3.5.3(b) and 3.5.3(c), applicable to the fillets of solid-forged web-type crankshafts and to the crankpin fillets of semi-built crankshafts only. All crank dimensions necessary for the calculation of stress concentration factors are shown in Fig. IV 3-5. The following related dimensions will be applied for the calculation of stress concentration factors.

crankpin fillets	journal fillets
$r = R_H/D$	$r = R_G/D$
$s = S/D$ $w = W/D$ $b = B/D$ $d_G = D_{BG}/D$ $d_H = D_{BH}/D$ $t_H = T_H/D$ $t_G = T_G/D$	

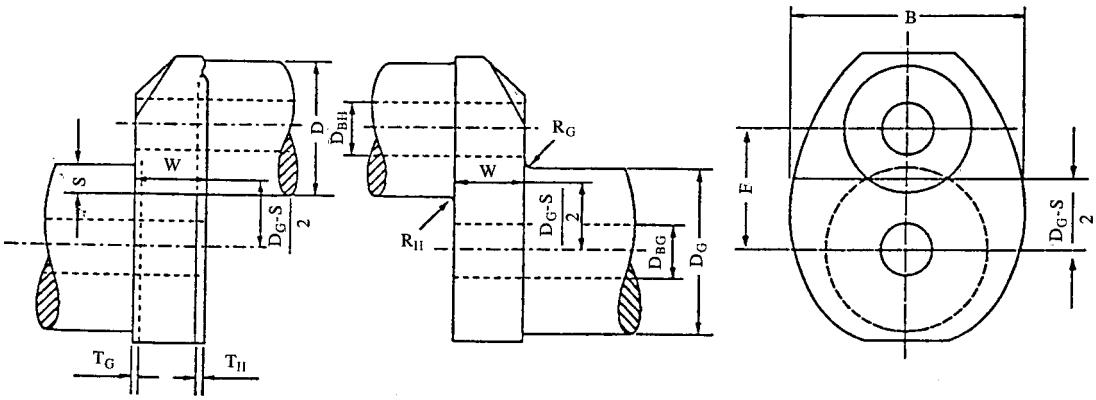

Actual dimensions:

D	=	Crankpin diameter (mm);
D_{BH}	=	Diameter of bore in crankpin (mm);
R_H	=	Fillet radius of crankpin (mm);
T_H	=	Recess of crankpin (mm);
D_G	=	Journal diameter (mm);
D_{BG}	=	Diameter of bore in journal (mm);
R_G	=	Fillet radius of journal (mm);
T_G	=	Recess of journal (mm);
E	=	Pin eccentricity (mm);
S	=	Pin overlap (mm);

$$S = \frac{D + D_G}{2} - E$$

W	=	Web thickness (mm).
B	=	Web width (mm).

Fig. IV 3-5
Crank Dimensions Necessary for the Calculation of Stress Concentration Factors

Stress concentration factors are valid for the ranges of related dimensions for which the investigations have been carried out. Ranges are as follows:

$$-0.5 \le s \le 0.7$$
$$0.2 \le w \le 0.8$$
$$1.2 \le b \le 2.2$$
$$0.03 \le r \le 0.13$$
$$0 \le d_G \le 0.8$$
$$0 \le d_H \le 0.8$$

The factor f (recess) which accounts for the influence of a recess in the fillets is valid if

$t_H \leq R_H/D$

$t_G \leq R_G/D$

and is to be applied within the range

$-0.3 \leq s \leq 0.5$

(b) Crankpin fillet

The stress concentration factor for bending (α_B) is:

$$\alpha_B = 2.6914 \cdot f(s,w) \cdot f(w) \cdot f(b) \cdot f(r) \cdot f(d_G) \cdot f(d_H) \cdot f(recess)$$

where:

$$f(s,w) = -4.1883 + 29.2004 \cdot w - 77.5925 \cdot w^2 + 91.9454 \cdot w^3 - 40.0416 \cdot w^4 + (1-s) \cdot (9.5440 - 58.3480 \cdot w + 159.3415 \cdot w^2 - 192.5846 \cdot w^3 + 85.2916 \cdot w^4) + (1-s)^2 \cdot (-3.8399 + 25.0444 \cdot w - 70.5571 \cdot w^2 + 87.0328 \cdot w^3 - 39.1832 \cdot w^4)$$

$$f(w) = 2.1790 \cdot w^{0.7171}$$

$$f(b) = 0.6840 - 0.0077 \cdot b + 0.1473 \cdot b^2$$

$$f(r) = 0.2081 \cdot r^{(-0.5231)}$$

$$f(d_G) = 0.9993 + 0.27 \cdot d_G - 1.0211 \cdot d_G^2 + 0.5306 \cdot d_G^3$$

$$f(d_H) = 0.9978 + 0.3145 \cdot d_H - 1.5241\, d_H^2 + 2.4147 \cdot d_H^3$$

$$f(recess) = 1 + (t_H + t_G) \cdot (1.8 + 3.2 \cdot s)$$

The stress concentration factor for torsion (α_T) is:

$$\alpha_T = 0.8 \cdot f(r,s) \cdot f(b) \cdot f(w)$$

where:

$$f(r,s) = r[-0.322 + 0.1015 \cdot (1-s)]$$

$$f(b) = 7.8955 - 10.654 \cdot b + 5.3482 \cdot b^2 - 0.857 \cdot b^3$$

$$f(w) = w^{(-0.145)}$$

(c) Journal fillet

The stress concentration factor for bending (β_B) is:

$$\beta_B = 2.7146 \cdot f_B(s,w) \cdot f_B(w) \cdot f_B(b) \cdot f_B(r) \cdot f_B(d_G) \cdot f_B(d_H) \cdot f(recess)$$

where:

$$f_B(s,w) = -1.7625 + 2.9821 \cdot w - 1.5276\, w^2 + (1-s) \cdot (5.1169 - 5.8089 \cdot w + 3.1391 \cdot w^2) + (1-s)^2 \cdot (-2.1567 + 2.3297 \cdot w - 1.2952 \cdot w^2)$$

$$f_B(w) = 2.2422 \cdot w^{0.7548}$$

$$f_B(b) = 0.5616 + 0.1197 \cdot b + 0.1176 \cdot b^2$$

$$f_B(r) = 0.1908 \cdot r^{(-0.5568)}$$

$$f_B(d_G) = 1.0012 - 0.6441 \cdot d_G + 1.2265 \cdot d_G^2$$

$$f_B(d_H) = 1.0022 - 0.1903 \cdot d_H + 0.0073 \cdot d_H^2$$

$$f(recess) = 1 + (t_h + t_G) \cdot (1.8 + 3.2 \cdot s)$$

The stress concentration factor for shearing (β_Q) is:

$$\beta_Q = 3{,}0128 \cdot f_Q(s) \cdot f_Q(w) \cdot f_Q(b) \cdot f_Q(r) \cdot f_Q(d_H) \cdot f(recess)$$

where:

$$f_Q(s) = 0.4368 + 2.1630 \cdot (1-s) - 1.5212 \cdot (1-s)^2$$

$f_Q(w) = \dfrac{w}{0.0637 + 0.9369 \cdot w}$

$f_Q(b) = -0.5 + b$

$f_Q(r) = 0.5331 \cdot r^{(-0.2038)}$

$f_Q(d_H) = 0.9937 - 1.1949 \cdot d_H + 1.7373 \cdot d_H^2$

$f(recess) = 1 + (t_H + t_G) \cdot (1.8 + 3.2 \cdot s)$

The stress concentration factor for torsion (β_T) is:

$\beta T = \alpha T$ if the diameters and fillet radii of crankpin and journal are the same.

$\beta T = 0.8 \cdot f(r,s) \cdot f(b) \cdot f(w)$ if crankpin and journal diameters and/or radii are of different sizes.

where:

f(r,s), f(b) and f(w) are to be determined in accordance with 3.5.3(b) (see calculation of α_T), however, the radius of the journal fillet is to be related to the journal diameter:

3.5.4 Additional bending stresses

In addition to the alternating bending stresses in fillets (see 3.5.2(a)(iii)) further bending stresses due to misalignment and bedplate deformation as well as due to axial and bending vibrations are to be considered by applying σ_{add} as given by table:

Type of engine	σ_{add} (N/mm^2)
crosshead engines	± 30
trunk piston engines	± 10

3.5.5 Calculation of equivalent alternating stress

(a) General

The equivalent alternating stress is to be calculated for the crankpin fillet as well as for the journal fillet. For this calculation the theory of constant energy of distortion (von Mises' Criterion) is to be used. In this it is assumed that the maximum alternating bending stresses and maximum alternating torsional stresses within a crankshaft occur simultaneously and at the same point.

(b) Equivalent alternating stress

(i) For the crankpin fillet:

$$\sigma_v = \pm\sqrt{(\sigma_{BH} + \sigma_{add})^2 + 3 \cdot \tau_H^2}$$

(ii) For the journal fillet:

$$\sigma_v = \pm\sqrt{(\sigma_{BG} + \sigma_{add})^2 + 3 \cdot \tau_G^2}$$

where:

σ_v = Equivalent alternating stress (N/mm^2);

for other parameters see 3.5.2(a)(iii), 3.5.2(b)(iii) and 3.5.4.

3.5.6 Calculation of fatigue strength

The fatigue strength is to be understood as that value of alternating bending stress which a crankshaft can permanently withstand at the most highly stressed points of the fillets. Where the fatigue strength for a crankshaft cannot be furnished by reliable measurements, the fatigue strength may be evaluated by means of the following formulae:

(a) Related to the crankpin diameter:

$$\sigma_{DW} = \pm K \cdot (0.42 \cdot \sigma_B + 39.3) \cdot \left(0.264 + 1.073 \cdot D^{-0.2} + \frac{785 - \sigma_B}{4900} + \frac{196}{\sigma_B} \cdot \sqrt{\frac{1}{R_H}} \right)$$

(b) Related to the journal diameter:

$$\sigma_{DW} = \pm K \cdot (0.42 \cdot \sigma_B + 39.3) \cdot \left(0.264 + 1.073 \cdot D^{-0.2} + \frac{785 - \sigma_B}{4900} + \frac{196}{\sigma_B} \cdot \sqrt{\frac{1}{R_G}} \right)$$

where:

σ_{DW} = Allowable fatigue strength of crankshaft (N/mm^2);

K = Factor for different types of forged and cast crankshafts without surface treatment;

= 1.05 for continuous grain flow forged or drop- forged crankshafts;

= 1.0 for free form forged crankshafts;

= 0.93 for cast steel crankshafts;

σ_B = Minimum tensile strength of crankshaft material (N/mm^2).

It is to be considered that for calculation purposes R_H and R_G are not to be taken less than 2 mm. Where no results of the fatigue tests conducted on full size crank throws or crankshafts which have been subjected to surface treatment are available, the K-factors for crankshafts without surface treatment are to be used. In each case the experimental values of fatigue strength carried out with full size crank throws or crankshafts are subject to special consideration of the Society. The survival probability for fatigue strength values derived from testing is to be to the satisfaction of the Society and in principle not less than 80%.

3.5.7 Calculation of shrink-fits of semi-built crankshafts

(a) General

All crank dimensions necessary for the calculation of the shrink-fit are shown in Fig. IV 3-6.

where:

D_S = Shrink diameter (mm).

L_S = Length of shrink-fit (mm).

D_A = Outside diameter of web (mm), or twice the minimum distance x between center-line of journals and outer contour of web, whichever is less.

y = Distance between the adjacent generating lines of journal and pin (mm).

$y \geq 0.05 \cdot D_S$

Where y is less than $0.1 \cdot D_S$ special consideration is to be given to the effect of the stress due to the shrink on the fatigue strength at the crankpin fillet.

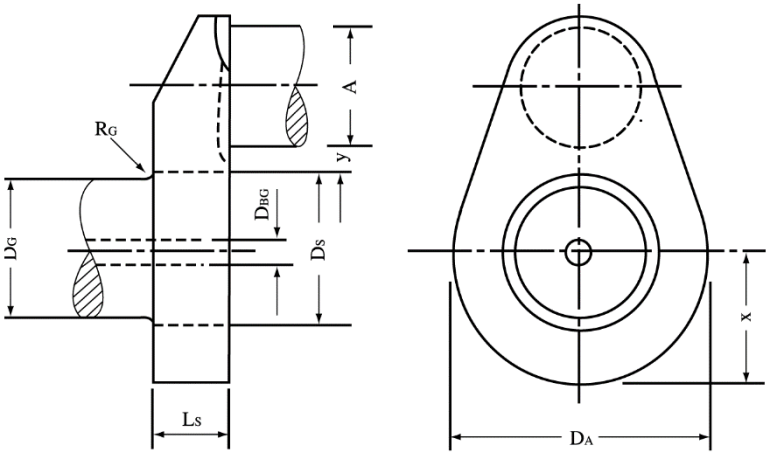

Fig. IV 3-6
Crank Throw of Semi-Built Crankshaft

Respecting the radius of the transition from the journal to the shrink diameter, the following is to be complied with:

$R_G \geq 0.015\ D_G$ and $R_G \geq 0.5\ (D_S - D_G)$, where the greater value is to be considered.

The actual oversize Z of the shrink-fit must be within the limits Z_{min} and Z_{max} calculated in accordance with 3.5.7(b) and 3.5.7(c).

(b) Necessary minimum oversize of shrink-fit

The necessary minimum oversize is determined by the greater value calculated in accordance with items (i) and (ii) stated belows:

(i) The calculation of the minimum oversize is to be carried out for the crank throw with the absolute maximum torque M_{max}. The torque M_{max} corresponds to the maximum value of the torque M_{Tmax} ascertained as per item 3.5.2(b) for the various mass points of the crankshaft.

$$Z_{min} \geq \frac{4 \cdot 10^3}{\pi\mu} \cdot \frac{S_R M_{max}}{E_m D_S L_S} \cdot \frac{1 - Q_A^2 \cdot Q_S^2}{(1 - Q_A^2) \cdot (1 - Q_S^2)}$$

with

$$Q_A = \frac{D_S}{D_A}$$

$$Q_S = \frac{D_{BG}}{D_S}, \mu = 0.20$$

for $\frac{L_S}{D_S} \geq 0.40$

where:

Z_{min}	=	Minimum oversize (mm);
S_R	=	Safety factor against slipping, however a value not less than 2 is to be taken;
Q_A, Q_S	=	Ratio of different diameters;
μ	=	Coefficient for static friction;
E_m	=	Young's modulus (N/mm^2).

(ii) In addition to item (i) the minimum oversize is also to be calculated according to the following formula:

$$Z_{min} \geq \frac{\sigma_S \cdot D_S}{E_m}$$

where:

σ_S =Minimum yield strength of material for crank web (N/mm^2).

(c) Maximum permissible oversize of shrink-fit

The maximum permissible oversize is calculated in accordance with the following formula:

$$Z_{max} \leq \frac{\sigma_S \cdot D_S}{E_m} + \frac{0.8 \cdot D_S}{1000}$$

where:

Z_{max} = Maximum oversize (mm).

This condition serves to restrict the shrinkage in the fillet.

3.5.8 Acceptability criteria

The sufficient dimensioning of a crankshaft is confirmed by a comparison of the equivalent alternating stress and the fatigue strength. This comparison has to be carried out both for the crankpin fillet and the journal fillet and is based on the formula:

$$Q = \frac{\sigma_{DW}}{\sigma_V}$$

where:

Q = Acceptability factor.

Adequate dimensioning of the crankshaft is ensured if the smaller of both acceptability factors satisfies the criteria:

$Q \geq 1.15$

3.5.9 Fillets and oil holes

(a) Fillets at the junctions of crank webs with crank journals or pins, where they are formed as solid forgings or castings, are to be machined to a radius not less than 5% of the actual diameter of the journal or the pin and are to have a smooth finish.

(b) Oil holes at the surfaces of crank journals and pins are to be rounded to an even contour with a smooth finish.

3.5.10 Reference marks are to be provided on the outer junction of the crank webs with the crank pins and journals.

3.5.11 The part of the journal outside the end bearing may be gradually tapered to the same diameter as the adjacent shaft.

3.5.12 The diameter in way of flywheel or eccentric sheave for pump fitted on the crankshaft or additional shaft between the aftermost journal bearing and the thrust shaft is not to be less than that required for the crankshaft.

3.5.13 Coupling flanges

(a) The thickness of coupling flanges at the pitch circle of bolt holes is not to be less than the required diameter of the coupling bolts.

(b) The fillet between coupling flange and crankshaft is to have a radius not less than 8% of the diameter of the corresponding crankshaft provided that recesses are to be avoided in way of bolt heads and nuts.

(c) Where a coupling flange is separate from the crankshaft, the arrangement is to be submitted for consideration and provision is to be made for the coupling to resist any twisting force and astern pull.

3.6 Starting Arrangements

3.6.1 Air starting

Compressed air starting arrangements are to be in compliance with the requirements specified in 4.6 of Part VI.

3.6.2 Electric starting

(a) Where main propelling and auxiliary engines are fitted with electric starters, at least 2 starting batteries are to be installed sufficient in their combined capacity without recharging to provide the consecutive starts, as required in 4.6.2 of Part VI for air starting, within 30 minutes.

(b) The connections to the starting batteries are to be such that the batteries can be used alternately. Two charging facilities are required for the starting batteries, one automatic device supplied from a charging dynamo on the engine, and another device, may be of manually, supplied from the ship's electric system. Each of the charging devices is to be able to recharge one battery completely within 6 hours.

(c) The starting batteries (or set of batteries) are to be used for starting and for the engine's own control and monitoring purpose only. When the starting batteries are used for the engine's own control and monitoring purpose, the aggregate capacity of the batteries is to be sufficient for continued operation of such a system in addition to the required number of starting capacity. Requirements are to be made to continuously maintain the stored energy at all times.

3.6.3 Starting for emergency generator sets (as the emergency source of power)

(a) Where emergency generator sets are fitted, they are to be capable of being started readily when cold.

(b) A hand starting is acceptable if it is demonstrated to be practicable. Where other means are provided for starting, they are, in general, to provide for not less than 3 consecutive starts in a period of 30 minutes without recourse to other source of power within the machinery space.

(c) Starting for emergency generator sets, see 11.5 of Part VII.

3.7 Air Intake and Exhaust Arrangements

3.7.1 Scavenging air arrangements

(a) The 2-stroke cycle engine is to be provided with at least one scavenging blower, either of the reciprocating or the rotary type.

(b) Where one independent scavenging blower is arranged for a 2-stroke cycle engine, 2 prime movers driving alternately or 2 prime movers of same power arranging duplicately are to be provided. Each of the prime movers of the duplicate means is to have a sufficient capacity to operate the main propelling engine at the revolutions developing more than 1/2 of the maximum continuous output without trouble in case of failure of one of the prime movers.

3.7.2 Exhaust gas turbochargers

(a) For main propulsion engine equipped with exhaust driven turbochargers, means are to be provided to ensure that the engine can be operated with sufficient power to give the ship a navigable speed in case of failure of one of the turbochargers.

(b) Where the main propulsion engine can not be operated only with the exhaust driven turbochargers in case of starting or low speed range, an auxiliary scavenging air system is to be provided.

3.7.3 Exhaust arrangements

(a) Exhaust lines and silencers are to be effectively lagged or cooled where the surface temperature may exceed 220°C. Where the exhaust line or silencer is water cooled and the cooling water outlet can be closed, special arrangements are to be provided to prevent an excessive rise in pressure occurring within the cooling spaces.

(b) Silencers are to be fitted with easily accessible cleaning openings and with means to drain water.

(c) If several engine exhaust lines are conducted to a common silencer, special arrangement is to be made to prevent exhaust gas from entering the engine which is not being used.

(d) Where the engine exhaust line is conducted near the water line, efficient means are to be provided to prevent the water from entering the engine.

(e) Where necessary, the exhaust line is to be fitted with suitable draining arrangement and means to allow for expansion.

(f) The engine exhaust line and the boiler uptake are not to be connected except where the boiler is arranged to utilize waste heat from the engine. Where the engine exhaust gases pass through the oil-fired boiler, the exhaust line leading to the boiler is to be so arranged that boiler un-burnt oil cannot enter the engine exhaust line. For this purpose, the changeover valve in the exhaust line is to be interlocked with the burner so that oil cannot be supplied to the burner while the valve is open.

(g) Oil carriers are to be provided with silencers or special spark arresters which will prevent soot particles from being discharged to the atmosphere as sparks.

(h) In 2-stroke cycle main engines fitted with exhaust gas turbo-chargers which operate on the impulse systems, provision is to be made to prevent broken piston rings entering the turbine casing and causing damage to blades and nozzle rings.

(i) Exhaust arrangements for reducing NOx and SOx emission from diesel engines are to be in accordance with Guidelines for Selective Catalytic Reduction Systems, Guidelines for SOx Scrubber Systems and Guidelines for Exhaust Gas Recirculation Systems.

3.8 Fuel, Lubrication and Cooling Arrangements

3.8.1 Fuel oil arrangements

(a) For the arrangement of fuel oil, see 4.4 of Part VI.

(b) All external high pressure fuel delivery lines between the high pressure fuel pumps and fuel injectors are to be protected with a jacketed piping system capable of containing fuel from a high pressure line failure. A jacketed pipe incorporates an outer pipe into which the high pressure fuel pipe is placed forming a permanent assembly. Metallic hose of approved design may be accepted as the outer pipe. The jacketed piping system is to include a means for collection of leakages and arrangements are to be provided for an alarm to be given of a fuel line failure. For existing ships the keel of which were laid on or before June 30, 1998 are to comply with the above requirements by 1st July 2003, except that a suitable enclosure recognized by the Society on engines having an maximum continuous output of 375 kW or less having fuel injection pumps serving more than one injector may be used as alternative to the jacketed piping system.

(c) All surfaces with temperatures above 220°C which may be impinged as a result of a fuel system failure are to be properly insulated.

(d) Oil fuel lines are to be screened or otherwise suitably protected to avoid as far as practicable oil spray or oil leakages onto hot surfaces, into machinery air intakes, or other sources of ignition. The number of joints in such piping systems is to be kept to a minimum.

(e) Suitable arrangements are to be made for draining any oil fuel leakage and for preventing contamination of lubricating oil by fuel oil. If flexible hoses are used for shielding purpose, these are to be of an approved type.

(f) On engines intended for service in unattended machinery spaces, the high pressure oil fuel injection piping is to be shielded irrespective of the bore of the cylinders.

(g) When in return piping the pulsation of pressure with peak to peak values exceed 2 N/mm^2, shielding of this piping is also required.

3.8.2 Lubricating oil arrangements

(a) Lubricating oil arrangements are to be in accordance with the requirements of 4.5 of Part VI in addition to the following.

(b) If enclosed crankcases are used as lubricating oil sumps, they are to be so arranged that the contained oil can be drained at any time and that purifiers or suitable filters for lubricating oil are provided.

(c) Lubricating oil lines are to be provided with pressure gauges or other adequate means at suitable positions to indicate that proper circulation is being maintained.

(d) Precautions are to be taken to ensure satisfactory lubrication of the scavenging blower and turbocharger when starting and when running at reduced speeds. Lubricating oil from the drive and the bearing is not to be allowed to mix with the scavenging and turbo-charging air.

(e) Main engines and auxiliary engines with maximum continuous output exceeding 375 kW are to be provided with alarm devices which give visible and audible alarming in the event of failure of supply of lubricating oil or appreciable reduction in lubricating oil pressure, and also with devices to stop the operation of the engine automatically by lower pressure after the function of alarms.

(f) Generators driven by diesel engines of 37 kW and over with forced lubrication are to be provided with a means to shut down the engine automatically in case of failure of the lubricating system.

3.8.3 Cooling arrangements

(a) Cooling arrangements are to be in accordance with the requirements of 4.3 of Part VI in addition to the following.

(b) Discharge pipes for cooling water or cooling oil are to be provided with thermometers and preferably be fitted with adequate means to indicate the proper circulation.

(c) In engines having 2 or more cylinders, adequate means are to be provided to adjust the quantity of cooling water or cooling oil to make cooling uniformly for each cylinder and piston.

(d) Drain arrangements are to be provided on water jackets and cooling water lines at their lowest positions. Relief valves are to be fitted in the main lines to the jackets to release excessive pressure.

(e) Cooling water or cooling oil is to be discharged from the cooling spaces, where practicable, at its highest position.

3.9 Type Tests of Mass Produced Diesel Engines

Each type of diesel engine mass produced under the accepted quality assurance scheme is to be type tested in accordance with this section. A type test carried out for a type of engine at a place of manufacture will be accepted for all engines of the same type built by licensees and licensers. A type test carried out on one engine having a given number of cylinders will qualify all engines of the same type having a different number of cylinders. The type test is to be conducted in the presence of the Surveyor.

Consideration will be given to modification of the type test requirements for existing engine designs which have proven reliability in service.

Mass produced diesel engines may be eligible for certification under quality assurance scheme*.

*: A system, by which the Society evaluates a manufacturer's quality assurance and quality control arrangements for compliance with the requirements, then authorizes a manufacturer to undertake and witness testing normally required to be done in the presence of a Surveyor.

3.9.1 Definition

(a) Mass produced engines, for main and auxiliary purposes, are defined as those which are produced under the following criteria:
   (i) In quantity under strict quality control of material and parts, according to a quality assurance scheme acceptable to the Society.
   (ii) By the use of jigs and automatic machine tools designed to machine parts to specified tolerances for interchangeability, and which are verified on a regular inspection basis.
   (iii) By assembly with parts taken from stock and requiring little or no fitting.
   (iv) With bench tests carried out on individual assembled engines according to a specified programme.
   (v) With appraisal by final examination of engines selected at random after workshop testing.

(b) Castings, forgings and other parts for use in mass produced engines are also to be produced by methods similar to those given in 3.9.1(a)(i), (ii) and (iii) above, with appropriate inspection.

(c) Hydraulic testing of components is to comply with Table IV 3-4.

(d) The specification of a mass produced engine is to define the limits of manufacture of all component parts. The total production output is to be certified by the manufacturer and verified as may be required, by the Society in accordance with the agreed manufacturer's quality assurance scheme, see 3.9.1(a)(i) above.

3.9.2 Procedure for approval of mass produced engines

(a) The procedure outlined in 3.9.2(b) to 3.9.2(e) applies to the inspection and certification of mass produced oil engines having a bore not exceeding 300 mm.

(b) For the approval of a mass produced engine type, the manufacturer is to submit a list of subcontractors for main parts.

(c) The manufacturer is to supply full information regarding the manufacturing processes and quality control procedures applied in the workshops. The information is to address the following:
   (i) Organization of quality control systems.
   (ii) Recording of quality control operations.
   (iii) Qualification and independence of personnel in charge of quality control.

(d) A running type test of at least 100 hours duration is to be carried out on an engine chosen from the production line. The type testing is to comply with 3.9.5 of this Chapter.

(e) Reserves the right to limit the duration of validity of approval of a mass produced engine. The Society is to be informed, without delay, of any change in the design of the engine, in the manufacturing or control processes, in the selection of materials or in the list of subcontractors for main parts.

3.9.3 Continuous review of production

(a) The Society's Surveyors are to be provided free access to the manufacturer's workshops and to the quality control files.

(b) The control of production, which is subject to survey, is to include the following:

(i) Inspection and testing records are to be maintained to the satisfaction of the Surveyor.

(ii) The system for identification of parts is to be in accordance with recognized practice, and acceptable to the Society.

(iii) The manufacturer is to provide full information about the quality control of the parts supplied by subcontractors for which certification may be required. The Society reserves the right to apply direct and individual inspection procedures for parts supplied by subcontractors when deemed necessary.

(iv) At the request of an attending Surveyor, a workshop test may be required for an individual engine.

3.9.4 Compliance and inspection certificate

(a) Each engine which is to be installed on a ship classed by the Society is to be supplied with a statement certifying that the engine is identical to the one which underwent the tests specified in 3.9.2(d), and state the test and inspection results. The statement is to be made on a form agreed with the Society. Each statement is to include the identification number which appears on the engine. A copy of this statement is to be submitted to the Society.

3.9.5 Type test conditions

(a) The requirements in this section are applicable to the type testing of mass produced internal combustion engines where the manufacturer has requested approval. Omission or simplification of the type test requirements will be considered by the Society for engines of an established type on application by the manufacturer.

(b) The engine to be tested is to be selected from the production line and agreed by the Society.

(c) The duration and programme of type tests is to include the following:

(i) 80 h at rated output.

(ii) 8 h at 110% overload.

(iii) 10 h at varying partial loads (25%, 50%, 75% and 90% of rated output).

(iv) 2 h at maximum intermittent loads.

(v) Starting tests.

(vi) Reverse running of direct reversing engines.

(vii) Testing of speed governor.

(viii) Testing of over-speed device.

(ix) Testing of lubricating oil system failure alarm device.

(x) Testing of the engine with turbocharger out of action, when applicable.

(xi) Testing of minimum speed for main propulsion engines and the idling speed for auxiliary engines.

(d) The type tests in 3.9.5(c) above at the required outputs are to be combined together in working cycles for the whole duration within the limits indicated. See also 3.9.5(j) and 3.9.5(k) as below.

(e) The overload testing required by 3.9.5(c) above is to be carried out with the following conditions:

(i) 110% of rated power at 103% revolutions per minute for engines directly driving propellers.

(ii) 110% of rated power at 100% revolutions per minute for engines driving electrical generators or for other auxiliary purposes.

(f) For prototype engines, the duration and programme of tests are to be specially agreed between the manufacturer and the Society.

(g) As far as practicable during type testing the following particulars are to be continuously recorded:

(i) Ambient air temperature.

(ii) Ambient air pressure.

(iii) Atmospheric humidity.

(iv) External cooling water temperature.

(v) Fuel and lubrication oil characteristics.

(h) In addition to the particulars stated in 3.9.5(g) above and as far as practicable, the following are also to be continuously measured and recorded:

(i) Engine revolutions per minute.

(ii) Brake power.

(iii) Torque.

(iv) Maximum combustion pressure.

(v) Indicator pressure diagrams where practicable.

(vi) Exhaust smoke (with an approved smoke meter).

(vii) Lubricating oil pressure and temperature.

(viii) Exhaust gas temperature in exhaust manifold, and, where facilities are available, from each cylinder.

(ix) For turbocharged engines:

(1) Turbocharger revolutions per minute.

(2) Air temperature and pressures before and after turbo-blower and charge cooler.

(3) Exhaust gas temperature and pressures before and after the turbine.

(4) The cooling water inlet temperature to the charge air cooler.

(i) After the type test, the main parts and especially those subject to wear are to be dismantled for examination by the Society's Surveyors.

(j) For engines that are required to be approved for different purposes (multi-purpose engines), and that have different performances for each purpose, the programme and duration of test is to be modified to cover the whole range of the engine performance, taking into account the most severe conditions and intended purpose(s).

(k) The rated output for which the engine is to be tested is the output corresponding to that declared by the manufacturer and agreed by the Society, i.e. actual maximum power which the engine is capable of delivering continuously between the normal maintenance intervals stated by the manufacturer at the rated speed and under the stated ambient conditions.

3.10 Tests, Inspections and Certification of Diesel Engine Component

3.10.1 General

(a) The engine manufacturer is to have a quality control system that is suitable for the actual engine types to be certified by the Society. The quality control system is also to apply to any sub-suppliers. The Society reserves the right to review the system or parts thereof.

(b) Materials and components are to be produced in compliance with all the applicable production and quality instructions specified by the engine manufacturer.

(c) The Society requires that certain parts are verified and documented by means of marine product certificate (C) , test report (TR) or manufacturer's document (W). Refer to 1.5 of "Guidelines for Survey of Products for Marine Use" for the definitions of marine product certificate or manufacturer's document.

(d) The documents above are used for product documentation as well as for documentation of single inspections such as crack detection, dimensional check, etc. If agreed to by the Society, the documentation of single tests and inspections may also be arranged by filling in results on a control sheet following the component through the production.

(e) The Surveyor is to review W for compliance with the agreed or approved specifications. C means that the Surveyor also witnesses the testing, batch or individual, unless an quality assurance scheme provides other arrangements.

(f) The manufacturer is not exempted from responsibility for any relevant tests and inspections of those parts for which documentation is not explicitly requested by the Society. Manufacturing works is to be equipped in such a way that all materials and components can be consistently produced to the required standard. This includes production and assembly lines, machining units, special tools and devices, assembly and testing rigs as well as all lifting and transportation devices.

(g) The extent of parts to be documented depends on the type of engine, engine size and criticality of the part.

(h) Symbols used in Table IV 3-4 are listed below. A summary of the required documentation for the engine components is listed in Table IV 3-4 of this Chapter.

Symbol	Description
CC	Chemical composition
CH	Crosshead engines
D	Cylinder bore diameter (mm)
M	Mechanical properties
MT	Magnetic particle testing
PT	Dye penetration testing
UT	Ultrasonic testing
VT	Visual examination of accessible surfaces by the Surveyor

(i) For components and materials not specified in Table IV 3-4 of this Chapter, consideration will be given by the Society upon full details being submitted and reviewed.

3.10.2 Hydraulic pressure, material and non-destructive tests required on diesel engine parts

(a) Hydraulic pressure tests on diesel engine parts after machining are to be carried out in the presence of the Surveyor under the conditions specified in Table IV 3-4 of this Chapter.

(b) Materials intended for the principal components of diesel engines and their non-destructive test are to conform to the requirements given in Table IV 3-4 of this Chapter.

(c) All required material tests are to be witnessed in the presence of the Society's Surveyor.

(d) For important structural parts of engines, examination of welded seams by approved methods of inspection may be required.

(e) In addition to tests mentioned above, where there is evidence to doubt the soundness of any engine component, non-destructive test by approved detecting methods may be required.

3.10.3 Engine alignment

The crankshaft alignment is to be checked each time the engine is lined up. This is at least to include measurement of the crank web deflections at each crank.

Table IV 3-4
Summary of Inspection, Test and Certification of Diesel Engine Part

Parts	Material properties(1)	Non-destructive Examination(2)	Hydraulic Testing(3)(6)	Dimensional Inspection(6) (including surface condition)	Visual Inspection(6) (Surveyor)	Application to Engine	Component Certificate
Welded bedplate	W (CC+M)	W (UT+MT/PT)			fit-up + post-welding	All	C
Bearing transverse girders (cast steel)	W (CC+M)	W (UT+MT/PT)			X	All	C
Welded frame box	W (CC+M)	W (UT+MT/PT)			fit-up + post-welding	All	C
Cylinder block (grey cast iron)			W(5)			CH	
Cylinder block (spheroidal graphite cast iron)			W(5)			CH	
Welded cylinder frames	W (CC+M)	W (UT+MT/PT)			fit-up + post-welding	CH	C
Engine block (grey cast iron)			W(5)			> 400 kW/cyl	
Engine block (spheroidal graphite cast iron)	W (M)		W(5)			> 400 kW/cyl	
Cylinder liner	W (CC+M)		W(5)			D > 300 mm	
Cylinder head (grey cast iron)			W			D > 300 mm	
Cylinder head (spheroidal graphite cast iron)			W			D > 300 mm	
Cylinder head (cast steel)	W (CC+M)	W (UT+MT/PT)	W		X	D > 300 mm	C
Forged cylinder head	W (CC+M)	W (UT+MT/PT)	W		X	D > 300 mm	C
Piston crown (cast steel)	W (CC+M)	W (UT+MT/PT)			X	D > 400 mm	C
Forged piston crown	W (CC+M)	W (UT+MT/PT)			X	D > 400 mm	C
Crankshaft: made in one piece	C (CC+M)	W (UT+MT/PT)		X	Random, of fillets and oil bores	All	C

Parts	Material properties(1)	Non-destructive Examination(2)	Hydraulic Testing(3)(6)	Dimensional Inspection(6) (including surface condition)	Visual Inspection(6) (Surveyor)	Application to Engine	Component Certificate
Semi-built crankshaft	See below	See below		See below	See below	All	C
Crank throw	C (CC+M)	W (UT+MT/PT)		X	Random, of fillets and shrink fittings	All	
Forged main journal and journals with flange	C (CC+M)	W (UT+MT/PT)		X	Random, of shrink fittings	All	
Exhaust gas valve cage			W			CH	
Piston rod, if applicable	C (CC+M)	W (UT+MT/PT) (MT/PT again after final machining (grinding))			Random	D > 400 mm	C
Cross head	C (CC+M)	W (UT+MT/PT) (MT/PT again after final machining (grinding))			Random	CH	C
Connecting rod with cap	C (CC+M)	W (UT+MT/PT)		X	Random, of all surfaces, in particular those shot peened	All	C
Coupling bolts for crankshaft	C (CC+M)	W (UT+MT/PT)		X	Random, of interference fit	All	C
Bolts and studs for main bearings	W (CC+M)	W (UT+MT/PT)				D > 300 mm	
Bolts and studs for cylinder heads	W (CC+M)	W (UT+MT/PT)				D > 300 mm	
Bolts and studs for connecting rods	W (CC+M)	W (UT+MT/PT)		TR(7) (thread marking)		D > 300 mm	
Tie rod	W (CC+M)	W (UT+MT/PT)		TR(7) (thread marking)	Random	CH	C
High pressure fuel injection pump body			W			D > 300 mm	
			TR(7)			D ≤ 300 mm	

Parts	Material properties(1)	Non-destructive Examination(2)	Hydraulic Testing(3)(6)	Dimensional Inspection(6) (including surface condition)	Visual Inspection(6) (Surveyor)	Application to Engine	Component Certificate
High pressure fuel injection valves (only for those not autofretted)			W			D > 300 mm	
			TR(7)			D ≤ 300 mm	
High pressure fuel injection pipes including common fuel rail	W (CC+M)		W for those that are not autofretted			D > 300 mm	
			TR for those that are not autofretted			D ≤ 300 mm	
High pressure common servo oil system	W (CC+M)		W			D > 300 mm	
			TR(7)			D ≤ 300 mm	
Cooler, both sides(4)	W (CC+M)		W			D > 300 mm	
Accumulator of common rail fuel or servo oil system	W (CC+M)		W			All engines with accumulators with a capacity of > 0.5 *l*	
Piping, pumps, actuators, etc. for hydraulic drive of valves, if applicable			W			> 800 kW/cyl	
Engine driven pumps (oil, water, fuel, bilge)			W			> 800 kW/cyl	
Bearings for main, crosshead, and crankpin	TR(7) (CC)	TR(7) (UT for full contact between basic material and bearing metal)		W		> 800 kW/cyl	

Notes:

(1) Material properties include chemical composition and mechanical properties, and also surface treatment such as surface hardening (hardness, depth and extent), peening and rolling (extent and applied force).

(2) Non-destructive examination means e.g. ultrasonic testing, crack detection by magnetic particle testing or dye penetration testing.

(3) Hydraulic testing is applied on the water/oil side of the component. Items are to be tested by hydraulic pressure at the pressure equal to 1.5 times the maximum working pressure. High pressure parts of the fuel injection system are to be tested by hydraulic pressure at the pressure equal to 1.5 maximum working pressure or

maximum working pressure plus 300 bar, whichever is the less. Where design or testing features may require modification of these test requirements, special consideration may be given.

(4) Charge air coolers need only be tested on the water side.

(5) Hydraulic testing is also required for those parts filled with cooling water and having the function of containing the water which is in contact with the cylinder or cylinder liner.

(6) Testing or inspection required for parts is marked with an "X".

(7) "TR" is a document signed by the manufacturer stating:

- conformity with requirements.
- that the tests and inspections have been carried out on samples from the current production.

3.11 Factory Acceptance Test and Shipboard Trials

3.11.1 Safety precautions

(a) Before any test run is carried out, all relevant equipment for the safety of attending personnel is to be made available by the manufacturer / shipyard and is to be operational.

(b) This applies especially to crankcase explosive conditions protection, but also to overspeed protection and any other shut down function.

(c) The overspeed protective device is to be set to a value, which is not higher than the overspeed value that was demonstrated during the type test for that engine. This set point shall be verified by the surveyor.

3.11.2 General

(a) Before any official testing, the engines shall be run-in as prescribed by the engine manufacturer.

(b) Adequate test bed facilities for loads as required in 3.11.3 as below shall be provided. All fluids used for testing purposes such as fuel, lubrication oil and cooling water are to be suitable for the purpose intended, e.g. they are to be clean, preheated if necessary and cause no harm to engine parts. This applies to all fluids used temporarily or repeatedly for testing purposes only.

(c) The testing consists of workshop and shipboard (quay and sea trial) testing.

(d) Engines are to be inspected for:

(i) Jacketing of high-pressure fuel oil lines including the system used for the detection of leakage.

(ii) Screening of pipe connections in piping containing flammable liquids.

(iii) Insulation of hot surfaces by taking random temperature readings that are to be compared with corresponding readings obtained during the type test. This shall be done while running at the rated power of engine. Use of contact thermometers may be accepted at the discretion of the attending Surveyor. If the insulation is modified subsequently to the type approval test, the Society may request temperature measurements.

(e) These inspections are normally to be made during the works trials by the manufacturer and the attending surveyor, but at the discretion of the Society parts of these inspections may be postponed to the shipboard testing.

3.11.3 Works trials (Factory Acceptance Test)

(a) Objectives

The purpose of the works trials is to verify design premises such as power, safety against fire, adherence to approved limits (e.g. maximum pressure), and functionality and to establish reference values or base lines for later reference in the operational phase.

(b) Records

(i) The following environmental test conditions are to be recorded:

(1) Ambient air temperature

(2) Ambient air pressure

(3) Atmospheric humidity

(ii) For each required load point, the following parameters are normally to be recorded:

(1) Power and speed

(2) Fuel index (or equivalent reading)

(3) Maximum combustion pressures (only when the cylinder heads installed are designed for such measurement).

(4) Exhaust gas temperature before turbine and from each cylinder (to the extent that monitoring is required in 3.13 of this Chapter)

(5) Charge air temperature

(6) Charge air pressure

(7) Turbocharger speed (to the extent that monitoring is required in 3.13 of this Chapter)

(iii) Calibration records for the instrumentation are, upon request, to be presented to the attending Surveyor

(iv) For all stages at which the engine is to be tested, the pertaining operational values are to be measured and recorded by the engine manufacturer. All results are to be compiled in an acceptance protocol to be issued by the engine manufacturer. This also includes crankshaft deflections if considered necessary by the engine designer

(v) In each case, all measurements conducted at the various load points are to be carried out at steady state operating conditions. However, for all load points provision should be made for time needed by the Surveyor to carry out visual inspections. The readings for MCR, i.e. 100% power (rated maximum continuous power at corresponding rpm) are to be taken at least twice at an interval of normally 30 minutes.

(c) Test loads

Test loads for various engine applications are given below. In addition, the scope of the trials may be expanded depending on the engine application, service experience, or other relevant reasons. Alternatives to the detailed tests may be agreed between the manufacturer and the Society when the overall scope of tests is found to be equivalent.

(i) Propulsion engines driving propeller or impeller only.

(1)	100% power (rated power) at rated engine speed (n_o):	at least 60 min after having reached steady conditions.
(2)	110% power at engine speed $n = 1.032\ n_o$: (Only required once for each different Engine/turbocharger confirguration)	Records to be taken after 15 minutes or after steady conditions have been reached, whichever is shorter.
(3)	Approved intermittent overload (if applicable):	testing for duration as agreed with the manufacturer.

(4) 90% (or normal continuous cruise power), 75%, 50% and 25% power in accordance with the nominal propeller curve, the sequence to be selected by the engine manufacturer..

(5) Reversing maneuvers(if applicable).

(6) Testing of governor and independent overspeed protective device.

(7) Shut down device.

Note: After running on the test bed, the fuel delivery system is to be so adjusted that overload power cannot be given in service, unless intermittent overload power is approved by the Society. In that case, the fuel delivery system is to be blocked to that power.

(ii) Engines driving generators for electric propulsion

The test is to be performed at rated speed with a constant governor setting under conditions of:

(1)	100% power (rated power) at rated engine speed:	at least 60 min after having reached steady conditions.
(2)	110% power:	15 min after having reached steady conditions.

(3) 75%, 50% and 25% power and idle, the sequence to be selected by the engine manufacturer.

(4) Start-up tests.

(5) Testing of governor and independent overspeed protective device.

(6) Shut-down device.

Note: After running on the test bed, the fuel delivery system is to be adjusted so that full power plus a 10% margin for transient regulation can be given in service after installation onboard. The transient overload capability is required so that the required transient governing characteristics are achieved also at 100% loading of the engine, and also so that the protection system utilised in the electric distribution system can be activated before the engine stalls.

(iii) Engines driving generators for auxiliary purposes

Test to be performed in accordance with 3.11.3(c)(ii) above.

(iv) Propulsion engines also driving power take off (PTO) generator

(1) 100% power (rated power) at rated engine speed: at least 60 min after having reached steady conditions.

(2) 110% power at rated engine speed: 15 min after having reached steady conditions.

(3) Approved intermittent overload (if applicable): testing for duration as agreed with the manufacturer.

(4) 90% (or normal continuous cruise power), 75%, 50% and 25% power in accordance with the nominal propeller curve, the sequence to be selected by the engine manufacturer..

(5) Reversing maneuvers(if applicable).

(6) Testing of governor and independent overspeed protective device.

(7) Shut down device.

Note:

After running on the test bed, the fuel delivery system is to be adjusted so that full power plus a margin for transient regulation can be given in service after installation onboard. The transient overload capability is required so that the electrical protection of downstream system components is activated before the engine stalls. This margin may be 10% of the engine power but at least 10% of the PTO power.

(v) Engines driving auxiliaries

(1) 100% power (rated power) at rated engine speed: at least 30 min after having reached steady conditions.

(2) 110% power at rated engine speed: 15 min after having reached steady conditions.

(3) Approved intermittent overload (if applicable): testing for duration as agreed with the manufacturer.

(4) For variable speed engines, 75%, 50% and 25% power in accordance with the nominal propeller curve, the sequence to be selected by the engine manufacturer..

(5) Reversing maneuvers(if applicable).

(6) Testing of governor and independent overspeed protective device.

(7) Shut down device.

Note: After running on the test bed, the fuel delivery system is normally to be so adjusted that overload power cannot be delivered in service, unless intermittent overload power is approved. In that case, the fuel delivery system is to be blocked to that power.

(d) Turbocharger matching with engine

(i) Compressor chart

(1) Turbochargers shall have a compressor characteristic that allows the engine, for which it is intended, to operate without surging during all operating conditions and also after extended periods in operation.

(2) For abnormal, but permissible, operation conditions, such as misfiring and sudden load reduction, no continuous surging shall occur.

(3) In this section, surging and continuous surging are defined as follows:
Surging means the phenomenon, which results in a high pitch vibration of an audible level or explosion-like noise from the scavenger area of the engine.

(4) Continuous surging means that surging happens repeatedly and not only once.

(ii) Surge margin verification

Category C turbochargers (as defined in 3.13 of this Chapter) used on propulsion engines are to be checked for surge margins during the engine workshop testing as specified below. These tests may be waived if successfully tested earlier on an identical configuration of engine and turbocharger (including same nozzle rings).

(1) For 4-stroke engines
The following shall be performed without indication of surging:

a) With maximum continuous power and speed (=100%), the speed shall be reduced with constant torque (fuel index) down to 90% power.

b) With 50% power at 80% speed (= propeller characteristic for fixed pitch), the speed shall be reduced to 72% while keeping constant torque (fuel index).

(2) For 2-stroke engines
The surge margin shall be demonstrated by at least one of the following methods:

a) The engine working characteristic established at workshop testing of the engine shall be plotted into the compressor chart of the turbocharger (established in a test rig). There shall be at least 10% surge margin in the full load range, i.e. working flow shall be 10% above the theoretical (mass) flow at surge limit (at no pressure fluctuations).

b) Sudden fuel cut-off to at least one cylinder shall not result in continuous surging and the turbocharger shall be stabilised at the new load within 20 seconds. For applications with more than one turbocharger the fuel shall be cut-off to the cylinders closest upstream to each turbocharger.

This test shall be performed at two different engine loads:

i) The maximum power permitted for one cylinder misfiring.

ii) The engine load corresponding to a charge air pressure of about 0.6 bar (but without auxiliary blowers running).

c) No continuous surging and the turbocharger shall be stabilised at the new load within 20 seconds when the power is abruptly reduced from 100% to 50% of the maximum continuous power.

(e) Integration tests

For electronically controlled engines, integration tests are to be made to verify that the response of the complete mechanical, hydraulic and electronic system is as predicted for all intended operational modes and the tests considered as a system are to be carried out at the works. If such tests are technically unfeasible at the works, however, these tests may be conducted during sea trial. The scope of these tests is to be agreed with the Society for selected cases based on the FMEA.

(f) Component inspections

Random checks of components to be presented for inspection after works trials are left to the discretion of the Society.

3.11.4 Shipboard trials

(a) Objectives

The purpose of the shipboard testing is to verify compatibility with power transmission and driven machinery in the system, control systems and auxiliary systems necessary for the engine and integration of engine / shipboard control systems, as well as other items that had not been dealt with in the FAT (Factory Acceptance Testing).

(b) Starting capacity

Starting manoeuvres are to be carried out in order to verify that the capacity of the starting media satisfies the required number of start attempts.

(c) Monitoring and alarm system

The monitoring and alarm systems are to be checked to the full extent for all engines, except items already verified during the works trials.

(d) Test loads

(i) Test loads for various engine applications are given below. In addition, the scope of the trials may be expanded depending on the engine application, service experience, or other relevant reasons.

(ii) The suitability of the engine to operate on fuels intended for use is to be demonstrated.

Note:

Tests other than those listed below may be required by statutory instruments (e.g. EEDI verification).

(iii) Propulsion engines driving fixed propeller or impeller

(1) At rated engine speed n_o: at least 4 hours.

(2) At engine speed $n = 1.032 \cdot n_o$: 30 minutes.
(if engine adjustment permits)

(3) At approved intermittent overload (if applicable): testing for duration as agreed with the manufacturer

(4) Minimum engine speed to be determined.

(5) The ability of reversible engines to be operated in reverse direction is to be demonstrated.

Note:

During stopping tests according to Resolution MSC.137(76), see 3.11.5 as below for additional requirements in the case of a barred speed range.

(iv) Propulsion engines driving controllable pitch propellers

(1) At rated engine speed n_0 with a propeller pitch leading to rated engine power (or to the maximum achievable power if 100% cannot be reached): at least 4 hours.

(2) At approved intermittent overload (if applicable): testing for duration as agreed with the manufacturer.

(3) With reverse pitch suitable for manoeuvring, see 3.11.5 for additional requirements in the case of a barred speed range.

(v) Engine(s) driving generator(s) for electrical propulsion and/or main power supply

(1) At 100% power (rated electrical power of generator): at least 60 min.

(2) At 110% power (rated electrical power of generator): at least 10 min.

Note: Each engine is to be tested 100% electrical power for at least 60 min and 110% of rated electrical power of the generator for at least 10 min. This may, if possible, be done during the electrical propulsion plant test, which is required to be tested with 100% propulsion power (i.e. total electric motor capacity for propulsion) by distributing the power on as few generators as possible. The duration of this test is to be sufficient to reach stable operating temperatures of all rotating machines or for at least 4 hours. When some of the gen. set(s) cannot be tested due to insufficient time during the propulsion system test mentioned above, those required tests are to be carried out separately.

(3) Demonstration of the generator prime movers' and governors' ability to handle load steps as described in 3.2.1 of Part VII.

(vi) Propulsion engines also driving power take off (PTO) generator

(1) 100% engine power (MCR) at rated engine speed n_0: at least 4 hours.

(2) 100% propeller branch power at engine speed n_0
(unless already covered in (1)): 2 hours.

(3) 100% PTO branch power at engine speed n_0: at least 1 hour.

(vii) Engines driving auxiliaries.

(1) 100% power (rated power) at rated engine speed: at least 30 min.

(2) Approved intermittent overload: testing for duration as approved.

3.11.5 Torsional vibrations

(a) Barred speed range

(i) Where a barred speed range (bsr) is required, passages through this bsr, both accelerating and decelerating, are to be demonstrated. The times taken are to be recorded and are to be equal to or below those times stipulated in the approved documentation, if any. This also includes when passing through the bsr in reverse rotational direction, especially during the stopping test.

Note:

Applies both for manual and automatic passing-through systems.

(ii) The ship's draft and speed during all these demonstrations is to be recorded. In the case of a controllable pitch propeller, the pitch is also to be recorded.

(iii) The engine is to be checked for stable running (steady fuel index) at both upper and lower borders of the bsr. Steady fuel index means an oscillation range less than 5% of the effective stroke (idle to full index).

3.12 Type Testing of Diesel Engines

3.12.1 General

(a) Type approval of diesel engine types consists of drawing approval, specification approval, conformity of production, approval of type testing programme, type testing of engines, review of the obtained results, and the issuance of the type approval certificate. The maximum period of validity of a type approval certificate is 5 years.

(b) For the purpose of this section, the following definitions apply:

(i) Low-speed engines means diesel engines having a rated speed of less than 300 rpm.

(ii) Medium-speed engines means diesel engines having a rated speed of 300 rpm and above, but less than 1400 rpm.

(iii) High-speed engines means diesel engines having a rated speed of 1400 rpm or above.

3.12.2 Objectives

(a) the type testing, documented in this section, is to be arranged to represent typical foreseen service load profiles, as specified by the engine builder, as well as to cover for required margins due to fatigue scatter and reasonably foreseen in-service deterioration.

(b) This applies to:

(i) Parts subjected to high cycle fatigue (HCF) such as connecting rods, cams, rollers and spring tuned dampers where higher stresses may be provided by means of elevated injection pressure, cylinder maximum pressure, etc.

(ii) Parts subjected to low cycle fatigue (LCF) such as "hot" parts when load profiles such as idle - full load - idle (with steep ramps) are frequently used.

(iii) Operation of the engine at limits as defined by its specified alarm system, such as running at maximum permissible power with the lowest permissible oil pressure and/or highest permissible oil inlet temperature.

3.12.3 Validity

(a) Type testing is required for every new engine type intended for installation onboard ships subject to classification.

(b) A type test carried out for a particular type of engine at any place of manufacture will be accepted for all engines of the same type built by licensees or the licensor, subject to each place of manufacture being found to be acceptable to the Society.

(c) A type of engine is defined by:

(i) bore and stroke

(ii) injection method (direct or indirect)

(iii) valve and injection operation (by cams or electronically controlled)

(iv) kind of fuel (liquid, dual-fuel, gaseous)

(v) working cycle (4-stroke, 2-stroke)

(vi) turbo-charging system (pulsating or constant pressure)

(vii) the charging air cooling system (e.g. with or without intercooler)

(viii) cylinder arrangement (in-line or V) (1)

(ix) cylinder power, speed and cylinder pressures (2)

Notes:

(1) One type test will be considered adequate to cover a range of different numbers of cylinders. However, a type test of an in-line engine may not always cover the V-version. Subject to the individual Societies' discretion, separate type tests may be required for the V-version. On the other hand, a type test of a V-engine covers the in-line engines, unless the bmep is higher.

Items such as axial crankshaft vibration, torsional vibration in camshaft drives, and crankshafts, etc. may vary considerably with the number of cylinders and may influence the choice of engine to be selected for type testing.

(2) The engine is type approved up to the tested ratings and pressures (100% corresponding to MCR).

Provided documentary evidence of successful service experience with the classified rating of 100% is submitted, an increase (if design approved*) may be permitted without a new type test if the increase from the type tested engine is within:

- 5% of the maximum combustion pressure, or
- 5% of the mean effective pressure, or
- 5% of the rpm

Providing maximum power is not increased by more than 10%, an increase of maximum approved power may be permitted without a new type test provided engineering analysis and evidence of successful service experience in similar field applications (even if the application is not classified) or documentation of internal testing are submitted if the increase from the type tested engine is within:

- 10% of the maximum combustion pressure, or
- 10% of the mean effective pressure, or
- 10% of the rpm

* Only crankshaft calculation and crankshaft drawings, if modified.

(d) De-rated engine

If an engine has been design approved, and internal testing per Stage A is documented to a rating higher than the one type tested, the Type Approval may be extended to the increased power/mep/rpm upon submission of an Extended Delivery Test Report at:

(i) Test at over speed (only if nominal speed has increased)

(ii) Rated power, i.e. 100% output at 100% torque and 100% speed corresponding to load point 1., 2 measurements with one running hour in between

(iii) Maximum permissible torque (normally 110%) at 100% speed corresponding to load point 3 or maximum permissible power (normally 110%) and speed according to nominal propeller curve corresponding to load point 3a., 0.5 hour

(iv) 100% power at maximum permissible speed corresponding to load point 2, 0.5 hour

(e) Integration test

An integration test demonstrating that the response of the complete mechanical, hydraulic and electronic system is as predicted maybe carried out for acceptance of sub-systems (Turbo Charger, Engine Control System, Dual Fuel, Exhaust Gas treatment, etc.) separately approved. The scope of these tests shall be proposed by the designer/licensor taking into account of impact on engine.

3.12.4 Safety precautions

(a) Before any test run is carried out, all relevant equipment for the safety of attending personnel is to be made available by the manufacturer/shipyard and is to be operational, and its correct functioning is to be verified.

(b) This applies especially to crankcase explosive conditions protection, but also overspeed protection and any other shut down function.

(c) The inspection for jacketing of high-pressure fuel oil lines and proper screening of pipe connections (as required in 3.12.8(i) of this Chapter) is also to be carried out before the test runs.

(d) Interlock test of turning gear is to be performed when installed.

3.12.5 Test programme

(a) The type testing is divided into 3 stages:

(i) Stage A - internal tests.

This includes some of the testing made during the engine development, function testing, and collection of measured parameters and records of testing hours. The results of testing required by the Society or stipulated by the designer are to be presented to the Society before starting stage B.

(ii) Stage B - witnessed tests.

This is the testing made in the presence of the Surveyor.

(iii) Stage C - component inspection.

This is the inspection of engine parts to the extent as required by the Society.

(b) The complete type testing program is subject to approval by the Society. The extent the Surveyor's attendance is to be agreed in each case, but at least during stage B and C.

(c) Testing prior to the witnessed type testing (stage B and C), is also considered as a part of the complete type testing program.

(d) Upon completion of complete type testing (stage A through C), a type test report is to be submitted to the Society for review. The type test report is to contain:

(i) overall description of tests performed during stage A. Records are to be kept by the builders QA management for presentation to the Society.

(ii) detailed description of the load and functional tests conducted during stage B.

(iii) inspection results from stage C.

(e) As required in 3.12.2 of this Chapter the type testing is to substantiate the capability of the design and its suitability for the intended operation. Special testing such as LCF and endurance testing will normally be conducted during stage A.

(f) High speed engines for marine use are normally to be subjected to an endurance test of 100 hours at full load. Omission or simplification of the type test may be considered for the type approval of engines with long service experience from non-marine fields or for the extension of type approval of engines of a well-known type, in excess of the limits given in 3.12.3 of this Chapter.

Propulsion engines for high speed vessels that may be used for frequent load changes from idle to full are normally to be tested with at least 500 cycles (idle - full load - idle) using the steepest load ramp that the

control system (or operation manual if not automatically controlled) permits. The duration at each end is to be sufficient for reaching stable temperatures of the hot parts.

3.12.6 Measurements and recordings

(a) During all testing the ambient conditions (air temperature, air pressure and humidity) are to be recorded.

(b) As a minimum, the following engine data are to be measured and recorded:

(i) Engine r.p.m.

(ii) Torque

(iii) Maximum combustion pressure for each cylinder (1)

(iv) Mean indicated pressure for each cylinder (1)

(v) Charging air pressure and temperature

(vi) Exhaust gas temperature

(vii) Fuel rack position or similar parameter related to engine load

(viii) Turbocharger speed

(ix) All engine parameters that are required for control and monitoring for the intended use (propulsion, auxiliary, emergency).

Note:

(1) For engines where the standard production cylinder heads are not designed for such measurements, a special cylinder head made for this purpose may be used. In such a case, the measurements may be carried out as part of Stage A and are to be properly documented. Where deemed necessary e.g. for dual fuel engines, the measurement of maximum combustion pressure and mean indicated pressure may be carried out by indirect means, provided the reliability of the method is documented.

(c) Calibration records for the instrumentation used to collect data as listed above are to be presented to - and reviewed by the attending Surveyor.

(d) Additional measurements may be required in connection with the design assessment

3.12.7 Stage A - internal tests

(a) During the internal tests, the engine is to be operated at the load points important for the engine designer and the pertaining operating values are to be recorded. The load conditions to be tested are also to include the testing specified in the applicable type approval programme.

(b) At least the following conditions are to be tested:

(i) Normal case:

The load points 25%, 50%, 75%, 100% and 110% of the maximum rated power for continuous operation, to be made along the normal (theoretical) propeller curve and at constant speed for propulsion engines (if applicable mode of operation i.e. driving controllable pitch propellers), and at constant speed for engines intended for generator sets including a test at no load and rated speed.

(ii) The limit points of the permissible operating range. These limit points are to be defined by the engine manufacturer.

(iii) For high speed engines, the 100 hr full load test and the low cycle fatigue test apply as required in connection with the design assessment.

(iv) Specific tests of parts of the engine, required by the Society or stipulated by the designer.

3.12.8 Stage B - witnessed tests

(a) The tests listed below are to be carried out in the presence of a Surveyor. The achieved results are to be recorded and signed by the attending Surveyor after the type test is completed.

(b) The over-speed test is to be carried out and is to demonstrate that the engine is not damaged by an actual engine overspeed within the overspeed shutdown system set-point. This test may be carried out at the manufacturer's choice either with or without load during the speed overshoot.

(c) Load points

The engine is to be operated according to the power and speed diagram (see Fig. IV 3-7 of this Chapter). The data to be measured and recorded when testing the engine at the various load points have to include all engine parameters listed in 3.12.6 above. The operating time per load point depends on the engine size (achievement of steady state condition) and on the time for collection of the operating values. Normally, an operating time of 0.5 hour can be assumed per load point, however sufficient time should be allowed for visual inspection by the Surveyor.

(d) The load points are:

(i) Rated power (MCR), i.e. 100% output at 100% torque and 100% speed corresponding to load point 1, normally for 2 hours with data collection with an interval of 1 hour. If operation of the engine at limits as defined by its specified alarm system (e.g. at alarm levels of lub oil pressure and inlet temperature) is required, the test should be made here.

(ii) 100% power at maximum permissible speed corresponding to load point 2.

(iii) Maximum permissible torque (at least and normally 110%) at 100% speed corresponding to load at point 3, or maximum permissible power (at least and normally 110%) and 103.2% speed according to the nominal propeller curve corresponding to load point 3a. Load point 3a applies to engines only driving fixed pitch propellers or waterjets. Load point 3 applies to all other purposes. Load point 3 (or 3a as applicable) is to be replaced with a load that corresponds to the specified overload and duration approved for intermittent use. This applies where such overload rating exceeds 110% of MCR. Where the approved intermittent overload rating is less than 110% of MCR, subject overload rating has to replace the load point at 100% of MCR. In such case the load point at 110% of MCR remains.

(iv) Minimum permissible speed at 100% torque, corresponding to load point 4.

(v) Minimum permissible speed at 90% torque corresponding to load point 5. (Applicable to propulsion engines only).

(vi) Part loads e.g. 75%, 50% and 25% of rated power and speed according to nominal propeller curve (i.e. 90.8%, 79.3% and 62.9% speed) corresponding to points 6, 7 and 8 or at constant rated speed setting corresponding to points 9, 10 and 11, depending on the intended application of the engine.

(vii) Crosshead engines not restricted for use with C.P. propellers are to be tested with no load at the associated maximum permissible engine speed.

(e) During all these load points, engine parameters are to be within the specified and approved values.

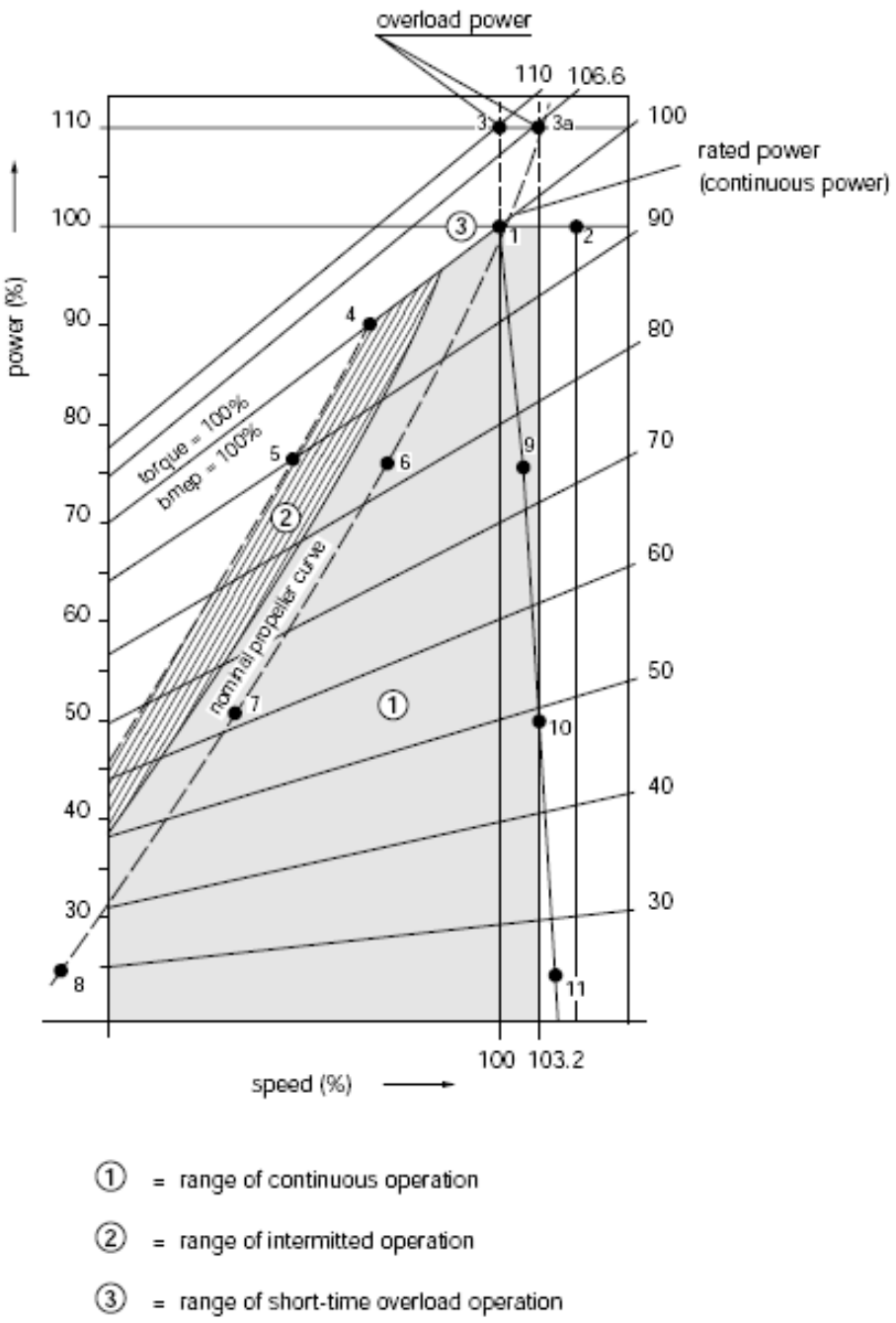

Fig. IV 3-7
Load Points

(f) Operation with damaged turbocharger

(i) For 2-stroke propulsion engines, the achievable continuous output is to be determined in the case of turbocharger damage.

(ii) Engines intended for single propulsion with a fixed pitch propeller are to be able to run continuously at a speed (r.p.m.) of 40% of full speed along the theoretical propeller curve when one turbocharger is out of operation. (The test can be performed by either by-passing the turbocharger, fixing the turbocharger rotor shaft or removing the rotor.)

(g) Functional tests

(i) Verification of the lowest specified propulsion engine speed according to the nominal propeller curve as specified by the engine designer (even though it works on a waterbrake). During this operation, no alarm shall occur.

(ii) Starting tests, for non-reversible engines and/or starting and reversing tests, for reversible engines, for the purpose of determining the minimum air pressure and the consumption for a start.

(iii) Governor tests: tests for compliance with IACS UR M3.1 and IACS UR M3.2 are to be carried out.

(h) Integration test

For electronically controlled diesel engines, integration tests are to verify that the response of the complete mechanical, hydraulic and electronic system is as predicted for all intended operational modes. The scope of these tests is to be agreed with the Society for selected cases based on the FMEA.

(i) Fire protection measures

Verification of compliance with requirements for jacketing of high-pressure fuel oil lines, screening of pipe connections in piping containing flammable liquids and insulation of hot surfaces:

(i) The engine is to be inspected for jacketing of high-pressure fuel oil lines, including the system for the detection of leakage, and proper screening of pipe connections in piping containing flammable liquids.

(ii) Proper insulation of hot surfaces is to be verified while running the engine at 100% load, alternatively at the overload approved for intermittent use. Readings of surface temperatures are to be done by use of Infrared Thermoscanning Equipment. Equivalent measurement equipment may be used when so approved by the Society. Readings obtained are to be randomly verified by use of contact thermometers

3.12.9 Stage C - Opening up for Inspections

(a) The crankshaft deflections are to be measured in the specified (by designer) condition (except for engines where no specification exists).

(b) High speed engines for marine use are normally to be stripped down for a complete inspection after the type test.

(c) For all the other engines, after the test run the components of one cylinder for in-line engines and two cylinders for V-engines are to be presented for inspection as follows (engines with long service experience from non-marine fields can have a reduced extent of opening):

(i) piston removed and dismantled

(ii) crosshead bearing dismantled

(iii) guide planes

(iv) connecting rod bearings (big and small end) dismantled (special attention to serrations and fretting on contact surfaces with the bearing backsides)

(v) main bearing dismantled

(vi) cylinder liner in the installed condition

(vii) cylinder head, valves disassembled

(viii) cam drive gear or chain, camshaft and crankcase with opened covers. (The engine must be turnable by turning gear for this inspection.)

(d) For V-engines, the cylinder units are to be selected from both cylinder banks and different crank throws.

(e) If deemed necessary by the surveyor, further dismantling of the engine may be required.

3.13 Turbochargers

3.13.1 Scope

(a) These requirements are applicable for turbochargers with regard to design approval, type testing and certification and their matching on engines. Turbochargers are to be type approved, either separately or as a part of an engine. The requirements are written for exhaust gas driven turbochargers, but apply in principle also for engine driven chargers.

(b) The requirements escalate with the size of the turbochargers. The parameter for size is the engine power (at MCR) supplied by a group of cylinders served by the actual turbocharger, (e.g. for a V-engine with one turbocharger for each bank the size is half of the total engine power).

(c) Turbochargers are categorised in three groups depending on served power by cylinder groups with:
- (i) Category A: ≤ 1000 kW
- (ii) Category B: > 1000 kW and ≤ 2500 kW
- (iii) Category C: > 2500 kW

3.13.2 Documentation to be submitted

(a) Category A:
On request
- (i) Containment test report.
- (ii) Cross sectional drawing with principal dimensions and names of components.
- (iii) Test program.

(b) Category B and C:
- (i) Cross sectional drawing with principal dimensions and materials of housing components for containment evaluation.
- (ii) Documentation of containment in the event of disc fracture, see IACS UR M73, 3.2.
- (iii) Operational data and limitations as:
- (iv) Maximum permissible operating speed (rpm)
- (v) Alarm level for over-speed
- (vi) Maximum permissible exhaust gas temperature before turbine
- (vii) Alarm level for exhaust gas temperature before turbine
- (viii) Minimum lubrication oil inlet pressure
- (ix) Lubrication oil inlet pressure low alarm set point
- (x) Maximum lubrication oil outlet temperature
- (xi) Lubrication oil outlet temperature high alarm set point
- (xii) Maximum permissible vibration levels, i.e. self- and externally generated vibration (Alarm levels may be equal to permissible limits but shall not be reached when operating the engine at 110% power or at any approved intermittent overload beyond the 110%.)
- (xiii) Arrangement of lubrication system, all variants within a range.
- (xiv) Type test reports.
- (xv) Test program.

(c) Category C:
- (i) Drawings of the housing and rotating parts including details of blade fixing.
- (ii) Material specifications (chemical composition and mechanical properties) of all parts mentioned above.
- (iii) Welding details and welding procedure of above mentioned parts, if applicable.

(iv) Documentation* of safe torque transmission when the disc is connected to the shaft by an interference fit, see 3.13.3 as below.

(v) Information on expected lifespan, considering creep, low cycle fatigue and high cycle fatigue.

(vi) Operation and maintenance manuals*.

*: Applicable to two sizes in a generic range of turbochargers.

3.13.3 Design requirements and corresponding type testing

(a) General

(i) The turbochargers shall be designed to operate under conditions given in chapter 1. The component lifetime and the alarm level for speed shall be based on 45°C air inlet temperature.

(ii) The air inlet of turbochargers shall be fitted with a filter.

(b) Containment

(i) Turbochargers shall fulfil containment in the event of a rotor burst. This means that at a rotor burst no part may penetrate the casing of the turbocharger or escape through the air intake. For documentation purposes (test/calculation), it shall be assumed that the discs disintegrate in the worst possible way.

(ii) For category B and C, containment shall be documented by testing. Fulfilment of this requirement can be awarded to a generic range** of turbochargers based on testing of one specific unit. Testing of a large unit is preferred as this is considered conservative for all smaller units in the generic range. In any case, it must be documented (e.g. by calculation) that the selected test unit really is representative for the whole generic range.

(iii) The minimum test speeds, relative to the maximum permissible operating speed, are:

(1) For the compressor: 120%.

(2) For the turbine: 140% or the natural burst speed, whichever is lower.

(iv) Containment tests shall be performed at working temperature.

(v) A numerical analysis (simulation) of sufficient containment integrity of the casing based on calculations by means of a simulation model may be accepted in lieu of the practical containment test, provided that:

(1) The numerical simulation model has been tested and its suitability/accuracy has been proven by direct comparison between calculation results and the practical containment test for a reference application (reference containment test). This test shall be performed at least once by the manufacturer for acceptance of the numerical simulation method in lieu of tests.

(2) The corresponding numerical simulation for the containment is performed for the same speeds as specified for the containment test.

(3) Material properties for high-speed deformations are to be applied in the numeric simulation. The correlation between normal properties and the properties at the pertinent deformation speed are to be substantiated.

(4) The design of the turbocharger regarding geometry and kinematics is similar to the turbocharger that was used for the reference containment test. In general, totally new designs will call for a new reference containment test.

**: A generic range means a series of turbocharger which are of the same design, but scaled to each other.

(c) Disc-shaft shrinkage fit

(i) Applicable to Category C

(ii) In cases where the disc is connected to the shaft with interference fit, calculations shall substantiate safe torque transmission during all relevant operating conditions such as maximum speed, maximum torque and maximum temperature gradient combined with minimum shrinkage amount.

(d) Type testing

(i) Applicable to Categories B and C

(ii) The type test for a generic range of turbochargers may be carried out either on an engine (for which the turbocharger is foreseen) or in a test rig.

(iii) Turbochargers are to be subjected to at least 500 load cycles at the limits of operation. This test may be waived if the turbocharger together with the engine is subjected to this kind of low cycle testing, see 3.12.

(iv) The suitability of the turbocharger for such kind of operation is to be preliminarily stated by the manufacturer.

(v) The rotor vibration characteristics shall be measured and recorded in order to identify possible sub-synchronous vibrations and resonances.

(vi) The type test shall be completed by a hot running test at maximum permissible speed combined with maximum permissible temperature for at least one hour. After this test, the turbocharger shall be opened for examination, with focus on possible rubbing and the bearing conditions.

(vii) The extent of the surveyor's presence during the various parts of the type tests is left to the discretion of the Society.

3.13.4 Certification

(a) The manufacturer shall adhere to a quality system designed to ensure that the designer's specifications are met, and that manufacturing is in accordance with the approved drawings.

(b) For category C, this shall be verified by means of periodic product audits of the quality assurance scheme by the Society.

(c) These audits shall focus on:

(i) Chemical composition of material for the rotating parts.

(ii) Mechanical properties of the material of a representative specimen for the rotating parts and the casing.

(iii) UT and crack detection of rotating parts.

(iv) Dimensional inspection of rotating parts.

(v) Rotor balancing.

(vi) Hydraulic testing of cooling spaces to 4 bars or 1.5 times maximum working pressure, whichever is higher.

(vii) Overspeed test of all compressor wheels for a duration of 3 minutes at either 20% above alarm level speed at room temperature or 10% above alarm level speed at 45°C inlet temperature when tested in the actual housing with the corresponding pressure ratio. The overspeed test may be waived for forged wheels that are individually controlled by an approved non-destructive method.

(d) Turbochargers shall be delivered with:

(i) For category C, a marine product certificate, which at a minimum cites the applicable type approval and the quality assurance scheme, when quality assurance scheme applies.

(ii) For category B, a work's certificate, which at a minimum cites the applicable type approval, which includes production assessment.

(e) The same applies to replacement of rotating parts and casing.

(f) Alternatively to the above periodic product audits, individual certification of a turbocharger and its parts may be made at the discretion of the Society. However, such individual certification of category C turbocharger and its parts shall also be based on test requirements specified in the above mentioned bullet points.

3.13.5 Alarms & monitoring

(a) For all turbochargers of Categories B and C, indications and alarms as listed in Table IV 3-5 are required.

(b) Indications may be provided at either local or remote locations.

Table IV 3-5
Alarm Lists

Pos.	Monitored Parameters	Category of Turbocharger				Notes
		B		C		
		Alarm	Indication	Alarm	Indication	
1	Speed	High(4)	X(4)	High(4)	X(4)	
2	Exaust gas each turbocharger inlet, temperature	High(1)	X	High(1)	X	High temp. alarms for each cylinder at engine is acceptable(2)
3	Lub. oil at turbocharger outlet, temperature				X	If not forced system, oil temperature near bearings
4	Lub. oil at turbocharger outlet, pressure	Low	X	Low	X	Only for forced lubrication systems(3)

Notes:

(1) For Category B turbochargers, the exhaust gas temperature may be alternatively monitored at the turbocharger outlet, provided that the alarm level is set to a safe level for the turbine and that correlation between inlet and outlet temperatures is substantiated.

(2) Alarm and indication of the exhaust gas temperature at turbocharger inlet may be waived if alarm and indication for individual exhaust gas temperature is provided for each cylinder and the alarm level is set to a value safe for the turbocharger

(3) Separate sensors are to be provided if the lubrication oil system of the turbocharger is not integrated with the lubrication oil system of the diesel engine or if it is separated by a throttle or pressure reduction valve from the diesel engine lubrication oil system.

(4) On turbocharging systems where turbochargers are activated sequentially, speed monitoring is not required for the turbocharger(s) being activated last in the sequence, provided all turbochargers share the same intake air filter and they are not fitted with waste gates.

Chapter 4

Deck Machinery and Essential Auxiliaries

4.1 General

4.1.1 The requirements of this chapter are applicable to the steering gear, athwartship thruster, windlass, mooring winch, capstan, reciprocating compressor and essential service pumps, etc.

4.1.2 Athwartship thrust units, not including azimuth thrusters intended for main propulsion, are regarded as part of the steering function. The requirements dealing with steering gear, shafting, gearing and couplings, propeller, remote control systems as well as electric installations in the relevant parts of the Rules, as far as they are applicable, are to be complied with for the athwartship thrust units.

4.1.3 The requirements in 4.3 of this Part are to be complied with, as far as they are applicable, for the mooring winch and capstan.

4.1.4 Drawings and data

The manufacturers are to submit the following drawings together with data for approval:

(a) For steering gear:

(i) Drawings

(1) General arrangements of steering gear

(2) Details of tiller, etc.

(3) Assembly and details of power units

(4) Assembly and details of rudder actuators

(5) Piping diagram of hydraulic pipes; Arrangements of control systems

(6) Diagram of hydraulic and electrical systems
(including alarm devices and automatic steering gear)

(7) Arrangements and diagram of an alternative source of power

(8) Diagram of a rudder angle indicator

(9) Other drawing considered necessary by the Society

(ii) Data

(1) Particulars

(2) Operating instructions (including drawing showing the change-over procedure for power units and control systems, drawings showing the sequence of automatic supply of power from an alternative source of power, data showing the kind, particulars and an assembly of the power source in the case that the alternative source of power is an independent source of power and information about hydraulic fluid quality)

(3) Manuals for countermeasures to be taken at the time of a single failure of the power actuating system;

(4) Calculation sheet of the strength of essential parts.

(5) Other data considered necessary by the society.

(b) For windlass, mooring winch and capstan

General arrangement, detail drawings of the shaft, cable lifting wildcat for windlass and brake, necessary particulars for capacity, speed, driving power, and material specifications, etc.

(c) For reciprocating compressor

(i) The compressor manufacturers are to submit the following drawings for approval:

Sectional assembly and crank shafts.

(ii) The compressor manufacturers are to submit the following data together with drawings for approval:

Design pressures and temperatures of air in different stages, capacity, revolutions, particulars, power required and material specifications, etc.

(d) For pumps

General arrangement including capacity, head, revolutions and driving power, description of pump including overload protection and other safety devices, and material specifications, etc.

4.1.5 Materials

(a) For steering gear

(i) All the steering gear components and the rudder stock are to be of sound reliable construction to the Surveyor's satisfaction.

(ii) All components transmitting mechanical forces to the rudder stock are to be tested according to the requirements of Part XI.

(iii) Ram cylinders, pressure housings of rotary vane type actuators, hydraulic power piping, valves, flanges and fittings; and all steering gear components transmitting mechanical forces to the rudder stock (such as tillers, quadrants, or similar components) are to be of steel or other approved ductile material, duly tested in accordance with the requirements of Part XI. In general, such material is to have an elongation of not less than 12 per cent nor a tensile strength in excess of 650 N/mm^2. Special consideration will be given to the acceptance of grey cast iron for valve bodies and redundant parts with low stress levels.

(iv) Grey cast iron may be accepted for redundant parts with low stress level, excluding cylinders, upon special consideration.

(b) For windlasses, mooring winches and capstans, the material used is generally to comply with 4.1.5(a) above. The cable lifting wildcats generally to be of cast steel.

(c) For reciprocating compressor

(i) Crankshaft and connecting rods are normally to be of forged steel, cast steel or approved spheroidal or nodular graphite cast iron. The use of other material is to be specially approved in each case by the Society.

(ii) Materials intended for crankshafts and the spheroidal or nodular graphite cast iron connecting rods are to be tested and inspected in the presence of the Surveyor in accordance with the requirements of Part XI or to the requirements of the specifications approved in connection with the design.

(d) For pumps which handle corrosive fluids, noncorrodible materials are to be used. Cast iron pump bodies are not to be used for circulating pumps of forced circulation boilers for which the design pressure exceeds 1.0 MPa.

(e) Materials intended for the following component parts are to be tested and inspected in the presence of the Surveyor in accordance with the requirements of Part XI or to the requirements of the specifications approved in connection with the design.

(i) For athwartship thrusters, windlass, mooring winches, capstans and pumps requiring a driving power of 375 kW and more: shafts.

(ii) For piping: Class-I and -II pipes and valves as classified in Part VI.

4.2 Steering Gears

4.2.1 General

(a) Each ship is to be provided with a main steering gear and an auxiliary steering gear in accordance with the requirements of the Rules. The main steering gear and the auxiliary steering gear are to be so arranged that the failure of one of them will not render the other one inoperative.

(b) Whilst the requirements satisfy the relevant regulations of the International Convention for the Safety of Life at Sea 1974 (SOLAS 1974) as amended, attention is to be given to any relevant statutory requirements of the National Authority of the country in which the ship is registered.

(c) Consideration will be given to other cases, or to arrangements which are equivalent to those required by the Rules.

(d) Where the steering gear is so arranged that more than one system (either power or control) can be simultaneously operated, the risk of hydraulic locking caused by single failure is to be considered.

(e) Definitions relating to steering gear

(i) Steering gear control system means the equipment by which orders are transmitted from the navigating bridge to the steering gear power units. Steering gear control systems comprise transmitters, receivers, hydraulic control pumps and their associated motors, motor controllers, piping and cables.

(ii) Main steering gear means the machinery, rudder actuator(s), the steering gear power units, if any, and ancillary equipment and the means of applying torque to the rudder stock (e.g. tiller or quadrant) necessary for effecting movement of the rudder for the purpose of steering the ship under normal service conditions.

(iii) Steering gear power unit means:

(1) in the case of electric steering gear, an electric motor and its associated electrical equipment,

(2) in the case of electrohydraulic steering gear, an electric motor and its associated electrical equipment and connected pump,

(3) in the case of other hydraulic steering gear, a driving engine and connected pump.

(iv) Auxiliary steering gear means the equipment other than any part of the main steering gear necessary to steer the ship in the event of failure of the main steering gear but not including the tiller, quadrant of components serving the same purpose.

(v) Power actuating system means the hydraulic equipment provided for supplying power to turn the rudder stock, comprising a steering gear power unit or units, together with the associated pipes and fittings, and a rudder actuator. The power actuating systems may share common mechanical components, i.e. tiller, quadrant and rudder stock, or components serving the same purpose.

(vi) Maximum ahead service speed means the greatest speed which the ship is designed to maintain in service at sea at her deepest sea going draught at maximum propeller RPM and corresponding engine MCR.

(vii) Rudder actuator means the component which converts directly hydraulic pressure into mechanical action to move the rudder.

(viii) Maximum working pressure means the maximum expected pressure in the system when the steering gear is operated to comply with 4.2.2(b).

4.2.2 Main steering gear

(a) The main steering gear and rudder stock are to be of adequate strength and capable of steering the ship at maximum ahead service speed, and are also to be designed that they will not be damaged at maximum astern speed. However, this design requirement need not be proved by trials at maximum astern speed and maximum rudder angle.

(b) The main steering gear is to be capable of putting the rudder over from 35° on one side to 35° on the other side with the ship at its deepest seagoing draught and running ahead at maximum ahead service speed and, under the same conditions, from 35° on either side to 30° on the other side in not more than 28 seconds. Where it is impractical to demonstrate compliance with this requirement during sea trials with the ship at its deepest seagoing draught and running ahead at the speed corresponding to the number of maximum continuous revolutions of the main engine and maximum design pitch, ships regardless of date of construction may demonstrate compliance with this requirement by one of the following methods:

(i) during sea trials the ship is at even keel and the rudder fully submerged whilst running ahead at the speed corresponding to the number of maximum continuous revolutions of the main engine and maximum design pitch; or

(ii) where full rudder immersion during sea trials cannot be achieved, an appropriate ahead speed shall be calculated using the submerged rudder blade area in the proposed sea trial loading condition. The calculated ahead speed shall result in a force and torque applied to the main steering gear which is at least as great as if it was being tested with the ship at its deepest seagoing draught and running ahead at the speed corresponding to the number of maximum continuous revolutions of the main engine and maximum design pitch; or

(iii) the rudder force and torque at the sea trial loading condition have been reliably predicted and extrapolated to the full load condition. The speed of the ship shall correspond to the number of maximum continuous revolutions of the main engine and maximum design pitch of the propeller.

(c) The main steering gear is to be operated by power where necessary to meet the requirements of 4.2.2(b) above and in any case when the Rules required a rudder stock over 120 mm in diameter in way of the tiller, excluding strengthening for navigation in ice.

(d) Regarding the propulsion and steering systems other than traditional arrangements for a vessel's directional control, the main steering arrangements are to be capable of changing direction of the vessel's directional control system from one side to the other at declared steering angle limits at an average rotational speed of not less than 2.3°/s with the vessel running ahead at the maximum ahead service speed.

4.2.3 Auxiliary steering gear

(a) The auxiliary steering gear is to be of adequate strength and capable of steering the ship at navigable speed and of being brought speedily into action in an emergency.

(b) The auxiliary steering gear is to be capable of putting the rudder over from 15° on one side to 15° on the other side in not more than 60 seconds with the ship at its deepest seagoing draught and running ahead at 1/2 of the maximum ahead service speed or 7 knots, whichever is the greater. Where it is impractical to demonstrate compliance with this requirement during sea trials with the ship at its deepest seagoing draught and running ahead at one half of the speed corresponding to the number of maximum continuous revolutions of the main engine and maximum design pitch or 7 knots, whichever is greater, ships regardless of date of construction, may demonstrate compliance with this requirement by one of the following methods:

(i) during sea trials the ship is at even keel and the rudder fully submerged whilst running ahead at one half of the speed corresponding to the number of maximum continuous revolutions of the main engine and maximum design pitch or 7 knots, whichever is greater; or

(ii) where full rudder immersion during sea trials cannot be achieved, an appropriate ahead speed shall be calculated using the submerged rudder blade area in the proposed sea trial loading condition. The calculated ahead speed shall result in a force and torque applied to the auxiliary steering gear which is at least as great as if it was being tested with the ship at its deepest seagoing draught and running ahead at one half of the speed corresponding to the number of maximum continuous revolutions of the main engine and maximum design pitch or 7 knots, whichever is greater; or

(iii) the rudder force and torque at the sea trial loading condition have been reliably predicted and extrapolated to the full load condition.

(c) The auxiliary steering gear is to be operated by power where necessary to meet the requirements of 4.2.3(b) above and in any case when the Rules require a rudder stock of over 230 mm in diameter in way of the tiller, excluding strengthening for navigation in ice.

(d) Regarding the propulsion and steering systems other than traditional arrangements for a vessel's directional control, the auxiliary steering arrangements are to be capable of changing direction of the vessel's directional control system from one side to the other at declared steering angle limits at an average rotational speed of not less than 0.5°/s with the vessel running ahead at one half of the maximum ahead service speed or 7 knots, whichever is the greater.

4.2.4 Where the main steering gear comprises 2 or more identical power units, an auxiliary steering gear need not be fitted, provided that:

(a) In a passenger ship, the main steering gear is capable of operating the rudder as required by 4.2.2(b) of this Part while any one of the power units is out of operation.

(b) In a cargo ship, the main steering gear is capable of operating the rudder as required by 4.2.2(b) of this Part while operating with all power units.

(c) The main steering gear is so arranged that after a single failure in its piping system or in one of the power units the defect can be isolated so that steering capability can be maintained or speedily regained.

4.2.5 Power units

Main and auxiliary steering gear power units are to be arranged to re-start automatically when power is restored after a power failure and capable of being brought into operation from a position on the navigating bridge. In the event of a power failure to any one of the steering gear power units, an audible and visual alarm is to be given on the navigating bridge. These power units are also to be arranged so that transfer between units can be readily effected.

4.2.6 Hand steering gear

Hand steering gears are only acceptable when the force required to operate the gear does not exceed 155N under normal condition, and are to be so designed that the rudder can be moved from hardover to hardover with a maximum of 25 turns of the hand steering wheel.

4.2.7 Rudder stoppers

The steering gear is to be arranged with the adequate stoppers within the gear itself to limit the movement of the rudder in normal service, otherwise the movements of quadrants and tillers are to be limited by structural stoppers arranged on the deck. Power operated steering gears are to be provided with positive arrangements for stopping the gear before the rudder stops are reached. These arrangements are to be synchronized with the gear itself and not with the steering gear control.

4.2.8 Steering gear control systems

(a) A steering gear control system is to be provided:
   (i) for main steering gear, both on the navigating bridge and in the steering gear compartment;
   (ii) where the main steering gear is arranged in accordance with 4.2.4 of this Part, by 2 independent control systems, both operable from the navigating bridge. This does not require duplication of the steering wheel or steering lever. Where the control system consists of a hydraulic telemotor, a second independent system need not be fitted, except in a tanker, chemical tanker or gas carrier of 10,000 gross tonnage and upwards, and
   (iii) for the auxiliary steering gear, in the steering gear compartment and, if power operated, it is also to be operable from the navigating bridge and is to be independent of the control system for the main steering gear.

(b) Any main and auxiliary steering gear control system operable from the navigating bridge is to comply with the following requirements:
   (i) if electric, it is to be served by its own separate circuit supplied from the associated steering gear power circuit from a point within the steering gear compartment, or directly from the same section of switchboard busbars, main or emergency, to which the associated steering gear power circuit is connected;
   (ii) means are to be provided in the steering compartment for disconnecting any control system operable from the navigating bridge from the steering gear it serves;
   (iii) the system is to be capable of being brought into operation from a position on the navigating bridge;
   (iv) in the event of a failure of electrical power supply to the steering gear control system, an audible and visible alarm is to be given on the navigating bridge; and

(v) each separate supply circuit of steering gear control is to be provided with short circuit protection only.

(c) Where the arrangement is such that a single failure may cause hydraulic lock and loss of steering, an audible and visual alarm which identifies the failed system or component is to be provided on the navigating bridge. The alarm is to be activated upon steering gear failure if:

(i) position of the variable displacement pump control system does not correspond to the given order, or

(ii) incorrect position of 3-way full follow valve or similar in constant delivery pump system is detected.

4.2.9 Rudder angle indicators

The angular position of the rudder is to be indicated in the navigating bridge, if the main steering gear is power operated. The rudder angle indication is to be independent of the steering gear control system, and readily visible from the control position. In addition, the angular position of the rudder is to be recognizable in the steering gear compartment.

4.2.10 Electrical equipment

(a) Electric power circuits and protective devices for steering gear is to comply with the requirements in 2.3 of Part VII.

(b) Indicators for running indication of each main and auxiliary motor of steering gear power units are to be installed on the navigating bridge and at a suitable main machinery control position.

(c) Electric control systems are to be independent and separated as far as is practicable throughout their length.

4.2.11 Components and piping

(a) Special consideration is to be given to the suitability of any essential component which is not duplicated. Where appropriate, any such essential component is to utilize anti-friction bearings which are permanently lubricated or provided with lubrication fittings.

(b) All steering gear components transmitting mechanical forces to the rudder stock, which are not protected against overload by structural rudder stoppers or mechanical buffers, are to have a strength at least equivalent to that of the rudder stock in way of the tiller.

(c) Piping, joints, valves, flanges and other fittings are to comply with the requirements of Part VI. The design pressure for calculations to determine the scantlings of piping and other steering gear components subjected to internal hydraulic pressure is to be at least 1.25 times the maximum working pressure to be expected under the operational condition specified in 4.2.2(b) of this Part, taking into account any pressure which may exist in the low pressure side of the system. Fatigue criteria may be applied for the design of piping and components, taking into account pulsating pressures due to dynamic loads.

(d) Relief valves are to be fitted to any part of the hydraulic system which can be isolated and in which pressure can be generated from the power source of external forces. The setting of the relief valves is not to exceed the design pressure. The valves are to be of adequate size and so arranged as to avoid an undue rise in pressure above the design pressure.

(e) Relief valves for protecting any part of the hydraulic system which can be isolated, as required by 4.2.11(d) above are to comply with the following:

(i) The setting pressure is not to be less than 1.25 times the maximum working pressure.

(ii) The minimum discharge capacity of the relief valves(s) is not to be less than 110% of the total capacity of the pumps which can deliver through it (them).

Under such conditions the rise in pressure is not to exceed 10% of the setting pressure. In this regard, due consideration is to be given to extreme foreseen ambient conditions in respect of oil viscosity.

(f) Flexible hoses

Hose assemblies approved by the Society may be installed between 2 points where flexibility is required but are not to be subjected to torsional deflection (twisting) under normal operating conditions. In general, the hose is to be limited to the length necessary to provide for flexibility and for proper operation of machinery.

(g) Hydraulic power operated steering gear are to be provided with:

(i) arrangement to maintain the cleanliness of the hydraulic fluid taking into consideration the type and design of the hydraulic system;

(ii) a low level alarm for each hydraulic fluid tank to give the earliest practicable indication of hydraulic fluid leakage. Audible and visual alarm are to be given on the navigating bridge and in the machinery space where they can be readily observed, and

(iii) a fixed storage tank having sufficient capacity to recharge at least one power actuating system including the hydraulic fluid tank, where the main steering gear is required to be power operated. The storage tank is to be permanently connected by piping in such a manner that the hydraulic system can be readily recharged from a position within the steering gear compartment and provided with a contents gauge.

(h) For the steering gears which are so arranged that more than one system (either power or control) can be simultaneously operated, where hydraulic locking, caused by a single failure, may lead to loss of steering, an audible and visual alarm, which identifies the failed system, is to be provided on navigation bridge.

4.2.12 Display of operating instructions

Appropriate operating instructions with a block diagram showing the change-over procedures for steering gear control systems and steering gear acting systems are to be permanently displayed in the navigating bridge and in the steering gear compartment.

4.2.13 Additional requirements for tankers, chemical tankers or gas carriers of 10,000 gross tonnage and upwards and every other ship of 70,000 gross tonnage and upwards are as follows:

The main steering gear is to comprise 2 or more identical power units complying with the requirements in 4.2.4 of this Part.

4.2.14 Additional requirements for tankers, chemical tankers or gas carriers of 10,000 gross tonnage and upwards are as follows:

Subject to the requirements in 4.2.15 of this Part the following are to be complied with:

(a) The main steering gear is to be so arranged that in the event of loss of steering capability due to a single failure in any part of one of the power actuating systems of the main steering gear, excluding the tiller, quadrant or components serving the same purpose, or seizure of the rudder actuators, steering capability is to be regained in not more than 45 seconds after the loss of one power actuating system.

(b) The main steering gear is to comprise either:

(i) 2 independent and separate power actuating systems, each capable of meeting the requirements in 4.2.2(b) of this Part, or

(ii) at least 2 identical power actuating systems which, acting simultaneously in normal operation, are capable of meeting the requirements in 4.2.2(b) of this Part. Where necessary to comply with these requirements, inter-connection of hydraulic power actuating systems is to be provided. Loss of hydraulic fluid from one system is to be capable of being detected and the defective system automatically isolated so that the other actuating system or systems remain fully operational.

(c) Steering gears other than of the hydraulic type are to achieve equivalent standards.

4.2.15 Additional requirements for tankers, chemical tankers or gas carriers of 10,000 gross tonnage and upwards but of less than 100,000 tons deadweight are as follows:

(a) Solutions other than those set out in 4.2.14 of this Part which need not apply the single failure criterion to the rudder actuator or actuators, may be permitted provided that an equivalent safety standard is achieved and that:

(i) following loss of steering capability due to a single failure of any part of the piping system or in one for the power units, steering capability is regained within 45 seconds, and

(ii) where the steering gear includes only a single rudder actuator, special consideration is given to stress analysis for the design including fatigue analysis and fracture mechanics analysis, as appropriate, the material used, the installation of sealing arrangements and the testing and inspection and provision of effective maintenance.

4.2.16 Power piping arrangements

(a) The power piping for hydraulic steering gears is to be arranged so that transfer between units can be readily effected.

(b) For all ships with non-duplicated actuators, isolating valves are to be fitted at the connection of pipes to the actuator, and are to be directly fitted on the actuator.

(c) Arrangements for bleeding air from the hydraulic system are to be provided where necessary.

4.2.17 Design

(a) The construction should be such as to minimize local concentrations of stress.

(b) Welds

(i) The welding details and welding procedures should be approved.

(ii) All welded joints within the pressure boundary of a rudder actuator or connecting parts transmitting mechanical loads should be full penetration type or of equivalent strength.

(c) Oil seals

(i) Oil seals between non-moving parts, forming part of the external pressure boundary, should be of the metal upon metal type or of an equivalent type.

(ii) Oil seals between moving parts, forming part of the external pressure boundary, should be duplicated, so that the failure of one seal does not render the actuator inoperative. Alternative arrangements providing equivalent protection against leakage may be accepted at the discretion of the Society.

(d) All steering gear components transmitting mechanical forces to the rudder stock, which are not protected against overload by structural rudder stops or mechanical buffers, are to have a strength at least equivalent to that of the rudder stock in way of the tiller.

(e) Rudder actuators other than those covered by 4.2.15 and relating IMO Guidelines are to be designed in accordance with Group I pressure vessels (notwithstanding any exemptions for hydraulic cylinders).

(f) In application of such rules the permissible primary general membrance stress is not to exceed the lower of the following values:

$$\frac{\sigma_B}{A} \text{ or}$$

$$\frac{\sigma_Y}{B}$$

where:

σ_B = Specified minimum tensile strength of material at ambient temperature

σ_Y = Specified minimum yield stress or 0.2% proof stress of the material, at ambient temperature

A, B = A and B are as follows:

	Steel	Cast steel	Nodular cast iron
A	3.5	4	5
B	1.7	2	3

(g) The design pressure is to be at least equal to the greater of the following:

(i) 1.25 times the maximum working pressure,

(ii) the relief valve setting.

(h) Accumulators, if any, are to comply with requirements for pressure vessels in Part V of the Rules.

4.2.18 Dynamic loads for fatigue and fracture mechanic analysis

The dynamic loading to be assumed in the fatigue and fracture mechanics analysis considering SOLAS II-1/Reg. 29.2.2 and 29.17.1 and relating IMO Guidelines, is to be established at the discretion of the Society.

Both the case of high cycle and cumulative fatigue are to be considered.

4.2.19 Alternative source of power

(a) Where the rudder stock is required to be over 230 mm diameter in way of the tiller, excluding strengthening for navigation in ice, an alternative power supply, sufficient at least to supply the steering gear power unit which complies with the requirements of 4.2.3(b) and also its associated control system and the rudder angle indicator, is to be provided automatically, within 45 seconds, either from the emergency source of electrical power or from an independent source of power located in the steering gear compartment. This independent source of power shall be used only for this purpose. In every ship of 10,000 gross tonnage and upwards, the alternative power supply shall have a capacity for at least 30 minutes of continuous operation and in any other ship for at least 10 minutes.

(b) Where the alternative power source required by 4.2.20(a) above is a generator, or an engine driven pump, automatic starting arrangements are to comply with the requirements relating to the automatic starting arrangements of emergency generators.

4.3 Windlass

4.3.1 General

A windlass of sufficient power and suitable for the size of chain cable is to be fitted to the ship to operate the anchors.

4.3.2 Definitions

(a) "Working Load": The working load, derived from the nominal diameter and the grade of anchor chain cables, is the tensile force exerted upon the cable lifter in the tangential direction when the anchor and anchor chain cables are being hoisted.

(b) "Overload Pull": The necessary temporary overload capacity of the windlass.

(c) "Holding Load": The maximum static load on the anchor chain cables which the cable lifter brake is to withstand.

(d) "Nominal Speed": The average speed of recovery of 55 m (two lengths) of anchor chain cables when 82.5 m (three lengths) of the cables are submerged and freely suspended at commencement of lifting.

(e) "Hoisting Speed": The mean speed of the chain cable during hoisting of the anchor and cable.

4.3.3 Windlass Mechanical Design

(a) Design Loads

(i) Holding Loads

Calculations are to be made to show that, in the holding condition (single anchor, brake fully applied and chain cable lifter declutched), and under a load equal to 80% of the specified minimum breaking strength of the chain cable, the maximum stress in each load bearing component will not exceed yield strength (or 0.2% proof stress) of the material. For installations fitted with a chain cable stopper, 45% of the specified minimum breaking strength of the chain cable may instead be used for the calculation.

(ii) Inertia Loads

The design of the drive train, including prime mover, reduction gears, bearings, clutches, shafts, cable lifter and bolting is to consider the dynamic effects of sudden stopping and starting of the prime mover or chain cable so as to limit inertial load.

(b) Continuous Duty Pull

The windlass prime mover is to be able to exert for at least 30 minutes a continuous duty pull (e.g., 30-minute short time rating corresponding to S2-30 min. of IEC 60034-1), Z_{cont1}, corresponding to the grade and diameter, d, of the chain cables as follows:

Grade of chain	Z_{cont1}	
	N	kgf
1	37.5 d^2	3.82 d^2
2	42.5 d^2	4.33 d^2
3	47.5 d^2	4.84 d^2
Unit of d	mm	mm

The values of the above table are applicable when using ordinary stockless anchors for anchorage depth down to 82.5 m.

For anchorage depth deeper than 82.5 m, a continuous duty pull Z_{cont2} is:

$$Z_{cont2}[N] = Z_{cont1}[N] + (D - 82.5) \times 0.27d^2$$

or

$$Z_{cont2}[kgf] = Z_{cont1}[kgf] + (D - 82.5) \times 0.0275d^2$$

where

d is Nominal diameter of anchor chain cable (mm).

D is the anchor depth, in metres.

The anchor masses are assumed to be the masses as given in Chapter 25 of Part II or Chapter 25 of Part XV. Also, the value of Z_{cont} is based on the hoisting of one anchor at a time, and that the effects of buoyancy and hawse pipe efficiency (assumed to be 70%) have been accounted for. In general, stresses in each torque-transmitting component are not to exceed 40% of yield strength (or 0.2% proof stress) of the material under these loading conditions.

(c) Overload Capability

The windlass prime mover is to be able to provide the necessary temporary overload capacity for breaking out the anchor. This temporary overload capacity or "short term pull" is to be at least 1.5 times the continuous duty pull applied for at least 2 minutes. The speed in this period may be lower than normal.

(d) Hoisting Speed

The mean speed of the chain cable during hoisting of the anchor and cable is to be at least 0.15 m/sec. For testing purposes, the speed is to be measured over 2 shots of chain cable and initially with at least 3 shots of chain (82.5 m or 45 fathoms in length) and the anchor submerged and hanging free.

(e) Brake Capacity

The capacity of the windlass brake is to be sufficient to stop the anchor and chain cable when paying out the chain cable. Where a chain cable stopper is not fitted, the brake is to produce a torque capable of withstanding a pull equal to 80% of the specified minimum breaking strength of the chain cable without any permanent deformation of strength members and without brake slip. Where a chain cable stopper is fitted, 45% of the breaking strength may instead be applied.

(f) Chain Cable Stopper

Chain cable stopper, if fitted, along with its attachments is to be designed to withstand, without any permanent deformation, 80% of the specified minimum breaking strength of the chain cable.

(g) Support Structure

For hull supporting structures of windlass and chain cable stoppers, refer to A1.7 of IACS UR A1.

4.3.4 Construction

(a) The windlass is to be so designed as to endure impact of waves and to ensure smooth operation of the components. The closed portions of the windlass installed on exposed decks are to have suitable watertight construction.

(b) The cable lifters for ordinary and couple type windlasses are to be so constructed that they can be driven independently and simultaneously.

(c) The cable lifter is to be as follows:

(i) The cable lifter is to be provided with five teeth at minimum, and the angle of contact of the anchor chain cable to the cable lifter is to be at least 110°.

(ii) The cable lifter is to be declutchable from the drive. Power operated clutches are also to be declutchable by hand.

(d) The cable lifter brake gear is to be as follows:

(i) Electric windlass is to be provided with an automatic control brake system which operates when the control handle is in the "off" position or when the power supply is cut off. The automatic control brake system is to be capable of sustaining the holding load of control brake.

(ii) Each cable lifter is to be fitted with a hand-brake which may be remotely controlled, capable of sustaining the holding load.

(e) Each remotely controlled windlass is to be fitted with a quick acting local emergency stop mechanism, which, when came into action, cuts off power for the windlass and applies the control brake system.

(f) Prime movers and gearing are to be provided with protective devices and safety devices against excessive torque and shock, as follows:

(i) Overpressure preventive device for hydraulic equipment.

(ii) Slipping clutch between electric motor and reduction gear.

(iii) Protective device for the electric motor against overload.

(iv) Covers for open gears.

(v) Cover for preventing the operator from burning by touching the steam cylinder at excessively high temperature.

(vi) Cover for crank disc.

(g) The speed of the rotation of the cable lifter is to be controllable.

4.3.5 Strength

(a) The parts for the windlass such as the bedplate, cable lifter, cable lifter shaft, bearing frame, brake gear, holding-down bolt, etc. are to have such strength that the stress on these parts is below the yield points of the materials when sustaining the holding load on the cable lifter.

(b) The driving section is to have such strength that the stress on each part is below 40% of the yield points of the materials used when the working load is applied.

4.3.6 Hydraulic Systems

Hydraulic systems where employed for driving windlasses are to comply with the provisions of the Society.

4.3.7 Electrical Systems

(a) Electric Motors

Electric motors are to meet the requirements of the Society and those rated 75 kW and over are to be certified. Motors exposed to weather are to have enclosures suitable for their location as provided for in the requirements of the Society. Where gears are fitted, they are to meet the requirements of the Society and those rated 75 kW and over are to be certified.

(b) Electrical Circuits

Motor branch circuits are to be protected in accordance with the provisions of the Society and cable sizing is to be in accordance with the requirements of the Society. Electrical cables installed in locations subjected to the sea are to be provided with effective mechanical protection.

4.3.8 Protection of Mechanical Components

To protect mechanical parts including component housings, a suitable protection system is to be fitted to limit the speed and torque at the prime mover. Consideration is to be given to a means to contain debris consequent to a severe damage of the prime mover due to overspeed in the event of uncontrolled rendering of the cable, particularly when an axial piston type hydraulic motor forms the prime mover.

4.3.9 Couplings

Windlasses are to be fitted with couplings which are capable of disengaging between the cable lifter and the drive shaft. Hydraulically or electrically operated couplings are to be capable of being disengaged manually.

4.3.10 Shop Tests and Inspection

The windlass and cable lifter unit are to be inspected during fabrication at the manufacturers' facilities by a Surveyor for conformance with the approved plans. Acceptance tests, as specified in the specified standard of compliance, are to be witnessed by the Surveyor and include the following tests, as a minimum. The test results are to be recorded.

(a) "No-load Test": The windlass is to be run without load once in normal and once in reverse directions, for a sum of 30 minutes, under the rated voltage at the speed of rotation equivalent to the rated speed. When the windlass is provided with a gear change, an additional 5 min similar test is to be carried out for each additional gear change.

During the test, the following items are to be checked or measured:

(i) tightness against oil leakage;

(ii) temperature of bearings;

(iii) pressure of abnormal noise.

(b) "Load Test": The windlass is to be tested to verify that the continuous duty pull, overload capacity and hoisting speed as specified in 4.3.3 can be attained. Where the manufacturing works does not have adequate facilities, these tests, including the adjustment of the overload protection, can be carried out on board ship. In these cases, functional testing in the manufacturer's works is to be performed under no-load conditions.

(c) Brake capacity test. The holding power of the brake is to be verified either through testing or by calculation.

(d) "Cable Lifter Brake Test": The holding power of the cable lifter brake is to be verified. The cable lifter brake is also to be tested with the anchor dropping, operated onboard with the holding load controlled and sustained by applying the brake at each half length of the chain.

(e) Performance Tests

(i) When provided with the remote control or other special device, their performances are to be verified.

(ii) The function of the automatic control brake system for electric windlass is to be tested at the manufacturer's shop of the electric motor.

(iii) The clutch and slipping clutch (for electric windlass) are to be tested to verify their performance.

4.3.11 On-Board Tests

Each windlass is to be tested under working conditions after installation onboard to demonstrate satisfactory operation. Each unit is to be independently tested for braking, clutch functioning, lowering and hoisting of chain cable and anchor, proper riding of the chain over the cable lifter, proper transit of the chain through the hawse pipe and the chain pipe, and effecting proper stowage of the chain and the anchor. It is to be confirmed that anchors properly seat in the stored position and that chain stoppers function as designed if fitted. The mean hoisting speed, as specified in 4.3.3, is to be measured and verified. The braking capacity is to be tested by intermittently paying out and holding the chain cable by means of the application of the brake. Where the available water depth is insufficient, the proposed test method will be specially considered.

4.3.12 Marking

Windlass shall be permanently marked with the following information:

(a) Nominal size of the windlass (e.g. 100/3/45 is the size designation of a windlass for 100 mm diameter chain cable of Grade E3 specified in Chapter 13 of Part XI of the Rules, with a holding load of 45% of the breaking load of the chain cable)

(b) Maximum anchorage depth, in metres.

4.4 Reciprocating Compressors

4.4.1 General

The following requirements apply to the compressors for supplying starting air of main propelling and auxiliary engines and the compressors for cargo refrigerating machinery. They apply mainly to reciprocating compressors of the types normally used aboard ships. For the capacity required for starting air compressors, see 4.6 of Part VI and the refrigerant compressors are also to comply with Part X.

4.4.2 Construction

(a) The temperature of compressed air at the discharge of each stage is not to exceed 160°C for multistage compressors or 200°C for single-stage compressors; and for discharge pressure of less than 1.0 MPa, an increase of 20°C may be permitted. The cooling of air compressors is to be so designed that the temperature of the air discharged to the starting air vessel is substantially not to exceed 95°C in service. The design of the cooler for compressors is to be based on a sea water temperature of not less than 32°C for water cooling and an air temperature of not less than 45°C for air cooling.

(b) Safety devices

(i) Each stage of the air compressor is to be fitted with a suitable relief valve which cannot be isolated and which is so dimensioned and adjusted that in the event of the discharge line being shut-off, the accumulation will not exceed 10% of the approved working pressure, which are not to be greater than the approved design pressure in each stage of the air compressor. The casings of the cooling water spaces are to be fitted with a relief valve or safety disc so that sample relief will be provided in the vent of the bursting of an air cooler tube.

(ii) The refrigerant compressor is to be protected against over-pressure in such a manner that an equalizing of the pressure difference between the discharge and suction sides is possible by a relief valve and/or safety disc. Where one compressor stage consists of several cylinders, each capable of being isolated, each cylinder is to be provided with a relief valve. The relief valve and safety disc are to be set at a pressure not greater than the design pressure as specified in Table X 2-2 of Part X.

(c) Every compressor stage and the refrigerant suction line are to be fitted with a suitable pressure gauge. In the intermediate stage of the air compressor requiring a driving power of less than 18 kW, the above pressure gauge may be omitted. It is recommended that the pressure gauge marked with the corresponding refrigerant temperatures be provided for the refrigerant compressor.

(d) The air compressor is to be provided with a separator in the final stage. It may also be advisable to fit a cooler. The separator or the cooler which serves as a separator is to be fitted at its lowest point with a drain where condensate may be observed as it runs off.

4.5 Pumps

Pumps shall be delivered with the Society's product certificate.

4.5.1 Reciprocating pumps and other displacement pumps are to be fitted with sufficient large relief valves which cannot be isolated and which protect the pump casing from excessive pressure when the delivery valve is shut. For pumps handling inflammable fluids, the discharge from the relief valves is to be fed back to the suction side of the pumps.

4.5.2 Rotary pumps are to be so designed that they can be operated without damage occurring when the delivery valves are shut.

4.5.3 The size, capacity and numbers required for the pump are to be in accordance with the requirements in relevant Parts.

4.5.4 Relief valves

Displacement pumps shall be fitted with relief valves. For pumps transporting flammable liquids, the discharge from the relief valve may be led back to suction side of the pump.

4.5.5 Hydrostatic tests

Pump housings, except those for cargo oil pumps, shall be hydrostatically tested at a pressure of 1.5 times the design pressure.

Cargo oil pumps shall be tested to 1.3 times the design pressure, with a minimum of 14 bar. For centrifugal pumps the design pressure shall be the design pressure head on the head-capacity curve. For displacement pumps the design pressure shall not be taken less than the relief valve opening pressure.

The steamside of steam-driven pumps shall be hydraulically tested to 1.5 times the steam pressure.

Hydrostatic testing of pump housings on submerged pumps may not be required.

4.5.6 Capacity tests

Pump capacities shall be checked with the pump running at design condition (rated speed and pressure head, viscosity, etc.).

Capacity test may be dispensed with for pumps produced in series when previous satisfactory tests have been carried out on similar pumps.

For centrifugal pumps having capacities less than 1000 m^3/h, the pump characteristic (head-capacity curve) shall be determined for each type of pump. For centrifugal pumps having capacities equal to or greater than 1000 m^3/h, the pump characteristic shall be determined over a suitable range on each side of the design point, for each pump.

Special survey arrangement for testing of pumps may be agreed upon.

4.6 Thrusters

4.6.1 General

(a) Application

The requirements of this section apply to maneuvering thrusters not intended to assist in propulsion, and to azimuthal and non-azimuthal thrusters (and to alternative propulsion and steering systems without a rudder, as applicable) intended for propulsion, maneuvering or dynamic positioning, or a combination of these duties.

Thrusters intended for propulsion, with or without combined duties for assisting in maneuvering or dynamic positioning, are to comply with appropriate requirements of this section in association with other relevant requirements of this Part.

Thruster types not provided for in this section, such as cycloidal propellers, pump or waterjet type thrusters, will be considered based on the manufacturer's submittal on design and engineering analyses.

Thrusters are to be constructed with sufficient strength, capacity and the necessary supporting systems to provide reliable propulsion and steering to the ship in all operating conditions. Special consideration will be given to the suitability of any essential component which is not duplicated.

For a ship fitted with multiple steering systems, each steering system is to be so arranged that the failure of one of them will not render the other one inoperative. Each of the steering systems is equipped with its own dedicated steering gear, provided that each of the steering systems is fulfilling the requirements for main steering gear (as given in 4.6.3(g)(i) below) and each of the steering systems is provided with an additional function for positioning and locking the failed steering system in a neutral position after a failure of its own power unit(s) and actuator(s).

(b) Definitions

For the purpose of this section the following definitions apply:

(i) Thruster

(1) General

Thrusters are devices capable of delivering side thrust or thrusts through 360° to improve the ship's maneuverability particularly in confined waters. There are three generic types of thrust-producing devices: the lateral or tunnel thruster, commonly known as "bow-thruster", which consists of a propeller installed in a athwartship tunnel; jet type thruster, which consist of a pump taking suction from the keel and discharge to either side; and azimuthal thruster, which can be rotated through 360° so that thrust can be developed in any direction. Cycloidal propellers can be considered a type of azimuthal thruster.

(2) Propeller-type thruster

Regardless of whether they are normally used for propulsion, propellers intended to be operated for an extended period of time during service in a condition where the ship is not free running approximately along the direction of the thrust are to be considered thrusters for the purposes of this section.

(ii) Continuous duty thruster

A continuous duty thruster is a thruster designed for continuous operation, such as dynamic positioning thrusters, propulsion assist, or main propulsion units.

(iii) Intermittent duty thruster

An intermittent duty thruster is a thruster which is designed for operation at peak power or RPM levels, or both, for periods not exceeding 1 hour followed by periods at the continuous rating or less, with total running time not exceeding 8 hours in 20 hours. Generally such thrusters are not meant to operate more than 1,000 hours per year.

(iv) Permanent magnet thruster

A permanent magnet thruster is built around a permanent magnet motor supported on roller bearings directly connected to a propeller or other thrust-producing device.

The prime mover is integrated directly into the thruster's housing, so the permanent magnet thruster consists of an electrically-wound stationary ring that is integrated into the thruster housing to form the stator and permanent magnets attached to the shaft to serve as the rotor of an electric motor. The thrust-producing device is attached to the permanent magnet electric motor.

(v) Permanent magnet motor

A permanent magnet motor is a type of brushless electric motor that uses permanent magnets rather than windings in the rotor.

(vi) Declared operational limits

Declared steering angle limits and maximum rotational speed are operational limits in terms of maximum steering angle, and rotational speed, or equivalent, according declared guidelines for safe operation, also taking into account the ship's speed or propeller torque/speed or other limitation. The "declared steering angle limits" and "maximum rotational speed" are to be established by the ship's designer and shipbuilder based on the ship specific non-traditional steering means. Ships' maneuverability tests, such as IMO Standards for Ship Maneuverability, Resolution MSC.137(76) are to be carried out not exceeding the declared operational limits.

(vii) Steering gear power unit

For purposes of alternative propulsion and steering arrangements, the steering gear power units are to be considered as defined in 4.2.1(e)(iii) of this Chapter. For electric steering gears, the electric steering motor is to be considered as part of power unit and actuator.

(viii) Steering system

"Steering system" is ship's directional control system, including main steering gear, auxiliary steering gear, steering gear control system and rudder, if any.

(c) Plans and particulars to be submitted

The general arrangements of the thruster installation, its location of installation, along with its supporting auxiliary machinery and systems, fuel oil tanks, foundations, watertight boundary fittings, etc., are to be submitted. The rated power/rpm and the rated thrust are to be indicated. For azimuthal thrusters, the mechanical and control systems for rotating the thruster assembly or for positioning the direction of thrust are to be submitted. In addition, plans of each component and of the systems associated with the thruster are to be submitted as detailed in the applicable sections of the Rules. Typically, the following are applicable:

(i) Supporting structures

(ii) Diesel engine prime mover

(iii) Electric motor and controller

(iv) Gearing

(v) Shafting

(vi) Propellers

(vii) Piping system

(viii) Control and instrumentation

4.6.2 Materials

(a) General

Materials entered into the construction of the torque-transmitting components of the thruster are to be in accordance with the applicable requirements of this Part and Part VI of the Rules. For instance, material requirements for propellers are to be in accordance with 7.1.3 of this Part; materials for gears, 5.1.3 of this Part; materials for shafting, 6.1.3 of this Part; materials for steering systems, 4.1.5(a) of this Chapter, etc. All material specifications are contained in Part XI of the Rules.

Where alternative material specifications are proposed, complete chemical composition and mechanical properties similar to the material required by the Rules are to be submitted for approval.

Materials used in the construction of the steering equipment components are to comply with the requirements of 24.1.2 of Part II of the Rules, as applicable.

(b) Material testing

(i) Testing by the Surveyor

The materials of the following components are to be tested in the presence of the Surveyor for verification of their compliance with the applicable requirements of Part XI of the Rules, or such other appropriate material specifications as may be approved in connection with a particular design.

(1) Shafts, shaft flanges, keys

(2) Gears (propulsion and steering)

(3) Propellers

(4) Impellers

(5) Couplings

(6) Coupling bolts

Bolts manufactured to a recognized standard and used as coupling bolts need not to be tested in the presence of the Surveyor.

4.6.3 Design

(a) Prime movers

(i) Diesel engines

Diesel engines used for driving thrusters are to comply with the design, construction, testing and certification requirements of Chapter 3 of this Part. Engine support systems are to be in accordance with Chapter 3 of this Part, except that standby pumps and similar redundancy specified for propulsion engines are not required for thruster engines.

(ii) Electric motors

Electric motors driving thrusters are to comply with the design, construction, testing and certification requirements of Chapter 4 of Part VII of the Rules. Power for thruster motors may be derived from ship service generators; except that precautions, such as interlock arrangements, are to be fitted to prevent starting except when there are enough generators on-line to support the starting and running of the thruster motor. All ship service generators may be put on line for this purpose, see 11.2 of Part VII of the Rules.

(iii) Hydraulic motors

Hydraulic motors delivering propulsion torque to thrusters are to be certified by the Surveyor at manufacturers' plants in accordance with the applicable requirements in 4.1, 4.5 and 4.7 of this Chapter. When applicable to notation **DPS**, in addition to the required test, hydraulic motors are to be designed based on applicable pressure vessel and piping standards for pressure retaining components, allowable stress for torque components, and recognized standard for seals. As an alternative to design review, mass produced motors may be accepted on the basis of specification review and a prototype test to 150% of the rated load, subject to agreement on design standards and manufacturing process.

(b) Propellers

The thruster propellers are to comply with the requirements of 7.2 of this Part.

(c) Gears

(i) Continuous duty gears

Gears for continuous duty thrusters are to meet the requirements of Chapter 5 of this Part.

(ii) Intermittent duty gears

Gears for intermittent duty thrusters as defined in 4.6.1(b)(iii) above are to be in accordance with a recognized standard and are to be submitted for consideration.

(d) Shafts

(i) Propeller and intermediate shafts

Shafting is to be in accordance with the requirements of Chapter 6 of this Part.

(ii) Coupling and coupling bolts

Shaft couplings, etc. are to be in accordance with the applicable requirements of 5.2.3, 5.2.4 and 6.6 of this Part.

(iii) Clutches

Clutches are to be in accordance with the requirements of a recognized standard.

(e) Anti-friction bearings

Full bearing identification and life calculations are to be submitted. Calculations are to include all gear forces, thrust vibratory loads at maximum continuous rating, etc. The minimum L10 life* is not to be less than the following:

(i) Continuous duty thrusters (propulsion and dynamic positioning): 20,000 hours

(ii) Intermittent duty thrusters: 5,000 hours

Shorter life may be considered in conjunction with an approved bearing inspection/replacement program reflecting calculated life.

*Note: L10 life means an expected time at which 10% of the population of a product will have failed.

(f) Steering systems for ship's directional control

Function of a steering mechanism is to rotate azimuthal thrusters for purpose of steering the ship at any horizontal angles. The steering mechanism is to be capable of rotating thrusters delivering the maximum torque under all conditions.

Steering components such as pinion gears are to meet the applicable requirements of Chapter 5, as applicable. Alternatively, consideration will be given to gears that are rated based on the recognized standards.

Hydraulic motors driving pinions for steering mechanisms are to be certified by the Surveyor at manufacturers' plants in accordance with 4.1, 4.5 and 4.7 of this Chapter.

Steering systems for azimuthal thrusters are to meet the requirements of 4.2 of this Part, as applicable, and the following requirements.

(i) Ships with only 1 azimuthal thruster

For ships that are arranged with only 1 azimuthal thruster as the only means of propulsion and steering, the thruster is to be provided with steering systems of a redundant design such that a single failure in one system does not affect the other system.

(ii) Cargo ships with 2 azimuthal thrusters

For cargo ships that are arranged with 2 azimuthal thrusters as the only means of propulsion and steering, each thruster is to be provided with at least one steering system. The steering system for each thruster is to be independent of the steering system for the other thruster.

(iii) Passenger ships with 2 azimuthal thrusters

For passenger ships that are arranged with 2 azimuthal thrusters as the only means of propulsion and steering, each thruster is to be provided with steering systems of a redundant design such that a single failure in one system does not affect any other system.

(g) Arrangements

(i) Arrangements

The main steering gear arrangements for ship's directional control is to be:

(1) of adequate strength and capable of steering the ship at maximum ahead service speed.

(2) capable of changing direction of the ship's directional control system from one side to the other at declared steering gear angle limits at an average rotational speed of not less than 2.3°/s with ship running ahead at maximum ahead service speed.

(3) operated by power

(4) reverse direction of thrust in sufficient time, and so to bring the ship to rest within a reasonable distance from maximum ahead service speed, shall be demonstrated and recorded.

(ii) Auxiliary steering gear arrangements

(1) The auxiliary steering arrangements for ship's directional control is to be:

a) of adequate strength and capable of steering the ship at navigable speed and of being brought quickly into action in an emergency;

b) capable of changing direction of the ship's directional control system from one side to the other at declared steering angle limits at an average rotational speed, of not less than 0.5°/s; with the ship running ahead at one half of the maximum ahead service speed or 7 knots, whichever is the greater; and;

c) for all ships, operated by power where necessary to meet the requirements of 4.6.3(g)(ii)(1)b) above and in any ship having power of more than 2,500 kW propulsion power per thruster unit.

(2) In a ship fitted with multiple steering systems, such as but not limited to azimuthing thrusters or water jet propulsion systems, an auxiliary steering gear need not be fitted, provided that:

a) for a passenger ship, each of the steering systems, is capable of satisfying the requirements in 4.6.3(g)(i)(2) above while any one of the power units is out of operation;

b) for a cargo ship, each of the steering systems, is capable of satisfying the requirements in 4.6.3(g)(i)(2) above while operating with all power units;

c) each of the steering systems is arranged so that after a single failure in its piping or in one of the power units, ship's steering capability (but not individual steering system operation)

can be maintained or speedily regained (e.g., by the possibility of positioning the failed steering system in a neutral position in an emergency, if needed). The above capacity requirements apply regardless whether the steering systems are arranged with common or dedicated power units.

(iii) Independent source of power

Where the propulsion power exceeds 2,500 kW per thruster unit, an alternative power supply, sufficient at least to supply the steering arrangements which complies with the requirements of 4.6.3(g)(ii)(1)b) above and also its associated control system and the steering system response indicator, is to be provided automatically, within 45 seconds, either from the emergency source of electrical power or from an independent source of power located in the steering gear compartment. This independent source of power is to be used only for this purpose. In every ship of 10,000 gross tonnage and upwards, the alternative power supply is to have a capacity for at least 30 minutes of continuous operation and in any other ship for at least 10 minutes.

(iv) Electric and electrohydraulic steering systems

For a ship fitted with multiple steering systems, the requirements in 2.3.4 through 2.3.8 of Part VII of the Rules are to be applied to each of the steering systems.

(h) Access for inspection

Adequate access covers are to be provided to permit inspection of gear train without disassembling thruster units.

(i) Permanent magnet thruster

(i) Plans to be submitted

General arrangement drawings indicating the key principal dimensions and detailed drawings and documents showing the following information are to be submitted:

(1) Design specifications for permanent magnet motor, stator, housing, bearing, blades, and cables

(2) Detailed material and welding connections

(3) Thruster rating (e.g., torque, power, thrust, RPM)

(4) Water sealing arrangements, (ingress of seawater or cooling water results in motor damage)

(5) Electrical drawing for power supply from the generators, switchboards, transformers, converters

(6) Design analysis of permanent magnet fixation and fastening procedure

(7) Operational characteristics, including conditions, limitations, and restrictions

(8) Blade material specifications in accordance with recognized standards, including chemical, mechanical, fatigue, thermal expansion properties/characteristics, and effects from continuous exposure to/operation in sea water

(9) Methodology and detailed calculations determining the maximum loading on the blades (e.g., CFD analysis, model tank testing)

(10) Assessment of the blade vibration characteristics while in service, including blade natural frequency

(11) Detailed fabrication of the blade material, quality assurance methodology/programs applied, along with inspection and testing carried out

(12) Method of attaching the blades to the rotor, including details of the endurance/operational tests the manufacturer has run

(13) Detailed service history experience data available from previous units that have been in Operation

(14) Any other information/arrangements/details that are considered necessary by the Society

(15) Test plan, See 4.6.3(i)(v) below

(ii) Structure

Structure is to be in accordance with a recognized standard. Structure requirements associated with azimuthing pods may be referred.

(iii) Permanent magnet materials standards

The permanent magnets are to be designed, constructed, and tested in accordance with a recognized code or standard.

(iv) Machinery and electrical systems

The requirements listed in 4.6.3(i) for machinery and electrical systems associated with the permanent magnet thruster are in addition to those listed in Part IV or Part VII of the Rules.

(1) Permanent magnet motor
Motors intended for essential services are to be designed, constructed, and tested in accordance with the requirements of Chapter 4 of Part VII of the Rules.

(2) Water seal system
The interface between the stator and rotor must maintain a water seal to prevent water leaking into the motor space resulting in motor failure.

(3) Lubricating system
Means are to be provided for preventing any damage/interruption of service lubricating carried in the water.

(4) Prevent rotation
The permanent magnet thruster is to be fitted with arrangements for stopping the rotor for safety, and to limit the risk of fires.

(5) Unusual design blade
Propellers of unusual design for permanent magnet thrusters are subject to special consideration based on the submittal of propeller load and stress analysis. See 4.6.3(b)(iii).

(6) Instrumentation
Alarms and instrumentation are to be provided in accordance with Table IV 4-1, as applicable.

(v) Testing and surveys

(1) Surveys
The permanent magnet motor is to be surveyed during manufacturing and testing in accordance with Chapter 4 of Part VII of the Rules, as applicable.

(2) Test plan
A test plan is to be developed for each permanent magnet thruster and is to be submitted to the Society for performing the plan review at the start of the plan review process.
Copies of the test plan are to be submitted to the Society for witnessing the tests and trials for the ship, prior to performing any tests or trials. The test plan is to identify all equipment and systems and the recommended method of performing the tests or trials, taking into account that some tests or trials may have to occur earlier, since the equipment or system may not be completely accessible at the sea trials for the ship.

(3) Testing and trials
Testing is to be performed according to the test plan and as deemed necessary by the Surveyor responsible for witnessing the tests and trials for the ship. Testing is to be performed at plant of manufacture when possible, particularly when the equipment or system will not be easily accessible at the sea trials for the ship and is to be agreed to by the Surveyor responsible for witnessing the tests and trials for the ship. Certain tests may be performed by a different Surveyor, provided it is agreed to by the Surveyor responsible for witnessing the tests and trials for the ship.

4.6.4 Controls and instrumentation

(a) Control system

An effective means of controlling the thruster from the navigation bridge is to be provided. Control power is to be from the thruster motor controller or directly from the main switchboard. Propulsion thrusters are also to be fitted with local means of control.

(b) Instrumentation

Alarms and instrumentation are to be provided in accordance with Table IV 4-1 below, as applicable.

Table IV 4-1
Instrumentation for Thrusters

Monitored Parameter	Navigating Bridge	Main Control Station(1), (2)
Engine low lubricating oil pressure alarm	x(1)	x
Engine coolant high temperature alarm	x(1)	x
Motor overload alarm	x(1)	x
Thruster RPM	x	x
Thrust direction (azimuthing type)	x	x
Thruster power supply failure alarm	x	x
Controllable pitch propellers hydraulic oil low pressure alarm	x(1)	x
Controllable pitch propellers hydraulic oil high pressure alarm	x(1)	x
Controllable pitch propellers hydraulic oil high temperature alarm	x(1)	x
Fire detection	x	x
Permanent Magnet Thruster stator high temperature alarm	x	x
Permanent Magnet Thruster earth fault	x	x

Notes:

(1) Either an individual indication or a common trouble alarm may be fitted at this location, provided individual indication is installed at the equipment (or main control station)

(2) For ships not fitted with a main control station, the indication is to be installed at the equipment or other suitable location

(c) Failure detection and response

Notwithstanding 4.6.4(a) and 4.6.4(b) above, 2.3.13 of Part VII and 4.2.8(c) of Part IV of the Rules for steering gear are also applied.

4.6.5 Communications

A means of voice communication is to be provided between the navigation bridge, main propulsion control station and the thruster room.

4.6.6 Miscellaneous requirements for thruster rooms

(a) Ventilation

Thruster rooms are to be provided with suitable ventilation so as to allow simultaneously for crew attendance and for thruster machinery to operate at rated power in all weather conditions.

(b) Bilge system for thruster compartments

Thrusters installed in normally unattended spaces are to be arranged such that bilge pumping can be effected from outside the space. Alternatively, where bilge pumping can only be effected from within the space, a bilge alarm to warn of high bilge water level is to be fitted in a centralized control station, the navigation bridge, or other normally manned control station. For bilge systems in general, the following requirements are to apply:

(i) Bilge suctions for normally unmanned spaces

Normally unmanned spaces located below the waterline, such as bow thruster compartment, emergency fire pump room, etc., for which bilge pumping is required, are to be arranged such that bilge pumping can be effected from outside the space, or alternatively, a bilge alarm is to be provided.

Thrusters in enclosed modules (capsules) are to be provided with a high water level alarm. At least one pump capable of bilging the module is to be operable from outside the module.

(c) Fire fighting systems

In general, spaces where thrusters are located, including enclosed modules, are to be protected with firefighting system in accordance with Part IX of the Rules.

4.6.7 Certification and trial

(a) Survey at the shop of the manufacturer

Thrusters and associated equipment are to be inspected, tested and certified by the Society in accordance with the following requirements, as applicable:

(i) Diesel engines

(ii) Gas turbines

(iii) Electric motors

(iv) Gears

(v) Shafting

(vi) Propellers

(b) Sea trial

Upon completion of the installation, performance tests are to be carried out in the presence of the Surveyor in a sea trial. This is to include but not limited to running tests at intermittent or continuous rating and maneuvering tests not to exceed the declared operational limits.

(c) Sea trial results

The stopping times, ship headings and distances recorded on trials, together with the results of trials to determine the ability of ship's having multiple propulsion/steering arrangements to navigate and maneuver with one or more of these devices inoperative, are to be available on board for the use of the Master or designated personnel.

4.6.8 Notification of declared operational limits

At each position where the directional control system can be operated, the declared operational limits are to be permanently indicated by a placard.

4.7 Tests and Inspections

4.7.1 Hydraulic pressure tests

Hydraulic pressure tests on deck machinery and pump parts after machining are to be carried out in the presence of the Surveyor under the conditions specified in Table IV 4-2.

Table IV 4-2
Hydraulic Test Pressure on Deck Machinery and Pump Parts

Parts to be Tested	Test Pressure, MPa
Steering gear:	
Steam reciprocating steering engine.	See 2.9.1 of this Part.
Hydraulic steering gear, pump case, cylinder etc.	1.5 W or W + 7, whichever is smaller.
Windlass:	
Steam reciprocating windlass engine.	See 2.9.1 of this Part.
Diesel windlass engine.	See 3.10.1 of this Part.
Hydraulic pump and motor.	1.5 W or W + 7, whichever is smaller.
Reciprocating compressors:	
Air Compressor:	
Cylinder, liner, cover, inter- and after-coolers.	
Compressed air side.	1.5 W
Cooling water space.	0.4 but not less than 1.5 W
Refrigerant compressor.	See Part X
Pump:	
Pump prime mover, steam or diesel engine.	See 2.9.1 and 3.10.1 of this Part.
Pump casing.	0.4 but not less than 1.5 W.
Piping:	
Group-I and -II pipes and fittings.	See Part VI.
Where: W = Design pressure and/or maximum working pressure for the respective parts, in MPa.	

4.7.2 Shop trials

(a) The following operational tests are to be carried out at the manufacturer's workshop in the presence of the Surveyor:

(i) For the steering gear: Characteristic tests of hydraulic pump units, if used. Running tests of steering gear. Adjustments and tests of safety devices and brake arrangements. Each new design power unit pump for steering gear is to be type tested before come into the market. The type test is to be for a duration of not less than

100 hours, the test arrangements are to be such that the pump may run in idling conditions, and at maximum delivery capacity at maximum working pressure. During the test, idling periods are to be alternated with periods at maximum delivery capacity at maximum working pressure. The passage from one condition to another is to occur at least as quickly as on board. During the whole test no abnormal heating, excessive vibration or other irregularities are permitted. After the test, the pump is to be disassembled and inspected. Type tests may be waived for a power unit which has been proven to be reliable in marine service.

(ii) For the athwartship thruster: Running tests of thruster. Adjustment and tests of the control and monitoring systems.

(iii) For the windlass, see 4.3.6 of this Part.

(iv) For the reciprocating compressor:

Running test for 2 hours and safety device test. Charging test for air compressor. Performance test for refrigerant compressor if deemed necessary by the Surveyor.

(v) For the pump: Characteristic tests with the pump running at designed condition.

(b) The overhaul inspection after shop trial is to be carried out in the presence of the Surveyor. The range and extent of inspection are subject to the discretion of the Surveyor.

4.7.3 On-board trials

(a) For the steering gear: The steering gear is to be tried out on the trial trip in order to demonstrate to the Surveyor's satisfaction that the requirements of the Rules have been met. The trial is to include the operation of the following:

(i) The steering gear, including demonstration of the performances required by 4.2.2(b) and 4.2.3(b). For the main steering gear trial, the propeller pitch of controllable pitch propellers is to be at the maximum continuous ahead RPM. If the vessel cannot be tested at the deepest draught, alternative trial conditions may be specially considered. In this case, for the main steering gear trial, the speed of the ship corresponding to the maximum continuous revolutions of the main engine is to apply;

(ii) The steering gear power units, including transfer between steering gear power units;

(iii) The isolation of one power actuating system, checking the time for regaining steering capability;

(iv) The hydraulic fluid recharging system;

(v) The emergency power supply required by 2.3.10 of Part VII;

(vi) The steering gear controls, including transfer of control and local control;

(vii) The means of communication between the steering gear compartment and the wheelhouse, also the engine room, if applicable;

(viii) The alarms and indicators;

(ix) Where the steering gear is designed to avoid hydraulic locking this feature is to be demonstrated.

Test items (iv), (vii), (viii) & (ix) may be effected at the dockside.

(b) For the windlass, an anchoring test is to be carried out in the presence of the Surveyor to demonstrate that the windlass with brakes, etc., functions satisfactorily and that the lifting power specified by the Rules can be developed. See 4.3.6 of this Part.

(c) For the athwartship thruster, mooring winch and capstan, an on-board running under working condition, if available, is to be carried out in the presence of the Surveyor.

(d) For reciprocating compressor, the following on-board trials are normally to be carried out in the presence of the Surveyor:

(i) Running and charging.

(ii) Safety device adjusting and setting.

(e) For pumps, an on-board running under working condition is to be carried out in the presence of the Surveyor.

4.7.4 Alternative proposals will be specially considered where any of the tests required by 4.7.2 and 4.7.3 above are considered impracticable.

Chapter 5
Gearing and Couplings

5.1 General

5.1.1 The requirements of this Chapter are applicable to reduction gearing and couplings for main propelling purpose and for driving essential service auxiliaries.

5.1.2 Drawings and data

(a) The manufacturer of gearing or coupling is to submit the following drawings for approval:

Assembly and section drawings, detail of pinion, pinion shaft, gear wheel, gear wheel shaft, flexible coupling, quill shaft and gear casing etc.

(b) The following data are to be submitted together with drawings for approval:

Material specifications, maximum power transmitted by each pinion in continuous running and corresponding revolutions, number of teeth and modules of teeth in each pinion and gear wheel, pitch circle diameters, pressure angle and helix angle, addendum and dedendum, face width tooth profiles together with base and pitch circle diameters and fillet radii, minimum backlash, addendum modifications and tooth bearing corrections to the teeth, finishing operations for the teeth, final accuracy foreseen of the teeth and their meshing, data for rim shrunk on gear wheel and/or hub shrunk on shaft with the shrinkage allowances, and welding details including sequences and stress relieving where the casing and/or the gear wheel are of welded construction.

(c) For flexible coupling

(i) Main technical parameters of flexible coupling: type, model, rated torque, instantaneous maximum torque, allowable vibratory(variable) torque, allowable revolution speed, allowable power loss (overheating), Allowable misalignment for continuous operation, static torsional angle(rated, maximum), static torsional stiffness, dynamic stiffness(if applicable), damper factor(if applicable).

(ii) Strength calculations(keys, connecting bolts, etc.)

(iii) Technical specification(design basis, enterprise standard, etc.)

(iv) Routine test program

(v) Assembly drawing

(vi) Drawing of main part(input/output flange/discs, elastic parts/components, etc.)

(vii) Operation instruction

(viii) Other drawings and data deemed necessary by the Society.

5.1.3 Materials

(a) All components of gearing and couplings which transmit part of the turning moment for the main propelling purpose and for driving the essential service auxiliaries are to be tested and inspected in the presence of the Surveyor to comply with the requirements of Part XI or to the requirements of the specifications approved in connection with the design.

(b) The components described above are normally to be made of forged or cast steel. The flangeless plain gear shaft may also be made of hot rolled carbon steel bars.

(c) The use of cast iron for gearing and coupling is to be approved by the Society in each particular case.

(d) In the selection of materials for pinion and gear wheel teeth, consideration is to be given to their combined ability to resist wear, pitting and scuffing. In general, for gears of through-hardened steel, except in the case of low reduction ratios, provision is also to be made for a hardness differential between pinion teeth and gear wheel teeth for which purposes the specified minimum tensile strength of the gear wheel rim material is not to be more than 85% of that of the pinion. For unhardened gears, the tensile strength of the material of pinion teeth is generally to be at least 100 N/mm^2 above that of the gear wheel teeth.

5.2 Construction

5.2.1 Gear wheels and pinions

(a) In the case of gear wheels with shrunk-fitted rim, the rim is to be of sufficient thickness to ensure a good shrink fit without undue distortion and the shrinkage is to be sufficient for transmitting the load with adequate safety. The shrinking is preferably to be completed prior to cutting the teeth and is to be carried out to the satisfaction of the Surveyor.

(b) In the case of welded construction, the full details of welding procedure are to be approved in the first instance by the Surveyor before work is commenced. The welded gear wheel is to be stress relieved prior to cutting the teeth and particulars of which are to be submitted. All welds in the completed gear wheel are to have satisfactory smooth appearance and even contour, and are to be proved by means of radiographic or magnetic particle detection.

(c) In general, arrangements are to be made so that the interior structure of the gear wheel may be examined. An alternative proposal will be specially considered in each case.

5.2.2 Gear casings

(a) The gear casing is to be of rigid construction in order that it is free from distortion when chocked and secured to its seating to maintain the alignment of gear elements at sea. For this purpose the casing is to be constructed with heavy ribbing with adequate flanges on both end walls and side walls.

(b) Inspection openings are to be provided at the peripheries of the gear casing to enable the teeth of pinions and gear wheels to be readily examined. Where the construction of the gear casing is such that sections of structure cannot readily be moved for inspection purposes, access openings of adequate size are also to be provided at the ends of the gear casing to permit examination of the structure of gear wheels. Their attachment to the shafts is to be capable of being examined by removal of bearing caps or by equivalent means.

(c) The gear casing of welded construction is to be stress relieved on completion and particulars of which are to be submitted.

5.2.3 Couplings

(a) The coupling is to be so constructed that it has sufficient strength to transmit the load and is capable of being operating safely and efficiently.

(b) When hydraulic or compressed air is employed in the operation of the clutch for main propelling purpose, an hydraulic pump or an air compressor of reserve use, or other suitable means are to be provided to ensure that the ship can proceed the safe voyage in case of failure of the hydraulic or compressed air main supply system. The Society may, however, modify the above mentioned requirements for small ships.

5.2.4 Flexible Couplings

(a) Design.

Flexible couplings intended for use in propulsion shafting are to be of approved designs. Couplings are to be designed for the rated torque, fatigue and avoidance of overheating. Where elastomeric material is used as a torque-transmitting component, it is to withstand environmental and service conditions over the design life

of the coupling, taking into consideration the full range of maximum to minimum vibratory torque. Flexible coupling design will be evaluated, based on submitted engineering analyses.

(b) Torsional displacement limiter

Flexible couplings with elastomer or spring type flexible members, whose failure will lead to total loss of propulsion capability of the vessel, such as that used in the line shaft of a single propeller vessel, are to be provided with a torsional displacement limiter. The device is to lock the coupling or prevent excessive torsional displacement when a pre-determined torsional displacement limit is exceeded. Operation of the vessel under such circumstances may be at reduced power. Warning notices for such reduced power are to be posted at all propulsion control stations.

(c) Barred range

Conditions where the allowable vibratory torque or the allowable dissipated power may be exceeded under the normal operating range of the engine are to be identified and are to be marked as a barred range in order to avoid continuous operation within this range.

(d) Impact torque

Flexible couplings for generator sets or motors are to be capable of absorbing short time impact torque due to electrical short-circuit conditions up to 6 times the nominal torque, or the couplings are to be evaluated for capability to absorb the torque generated by transient torsional vibration stresses.

5.3 Design – Load Capacity of Involute Parallel Axis Spur and Helical Gears

5.3.1 General influence factors

(a) Symbols and units

a	=	Centre distance, in mm;
b	=	Common facewidth, in mm;
$b_{1,2}$	=	Facewidth of pinion, wheel, in mm;
d	=	Reference diameter, in mm;
$d_{1,2}$	=	Reference diameter of pinion, wheel, in mm;
$d_{a1,a2}$	=	Tip diameter of pinion, wheel, in mm;
$d_{b1,b2}$	=	Based diameter of pinion, wheel, in mm;
$d_{f1,f2}$	=	Root diameter of pinion, wheel, in mm;
$d_{w1,w2}$	=	Working diameter of pinion, wheel, in mm;
F_t	=	Nominal tangential load, in N;
F_{bt}	=	Nominal tangential load on base cylinder in the transverse section, in N;
h	=	Tooth depth, in mm;
m_n	=	Normal module, in mm;
m_t	=	Transverse module, in mm;
$n_{1,2}$	=	Rotational speed of pinion, wheel in revs/min;
P	=	Maximum continuous power transmitted by the gear set, in kW;
$T_{1,2}$	=	Torque in way of pinion, wheel, in Nm;
U	=	Gear ratio;
v	=	Linear speed at pitch diameter, in m/s;
$x_{1,2}$	=	Addendum modification coefficient of pinion, wheel;
z	=	Number of teeth;
$z_{1,2}$	=	Number of teeth of pinion, wheel;
z_n	=	Virtual number of teeth;
α_n	=	Normal pressure angle at reference cylinder, in deg.,

α_t = Transverse pressure angle at ref. Cylinder, in deg.;
α_{tw} = Transverse pressure angle at working pitch cylinder, in deg.;
β = Helix angle at reference, in deg.;
β_b = Helix angle at base cylinder, in deg.;
ε_α = Transverse contact ratio;
ε_β = Overlap ratio;
ε_γ = Total contact ratio;

(b) Geometrical definitions

For internal gearing z_2, a, d_2, d_{a2}, d_{b2} and d_{w2} are negative. The pinion is defined as the gear with the smaller number of teeth, therefore the absolute value of the gear ratio, defined as follows, is always greater or equal to the unity:

$$u = \frac{Z_2}{Z_1} = \frac{d_{w2}}{d_{w1}} = \frac{d_2}{d_1}$$

For external gears u is positive, for internal gears u is negative. In the equation of surface durability b is the common face width on the pitch diameter. In the equation of tooth root bending stress b_1 or b_2 are the face widths at the respective tooth roots. In any case, b_1 and b_2 are not to be taken as greater than b by more than one module (m_n) on either side. The common face width b may be used also in the equation of teeth root bending stress if significant crowning or end relief have been adopted.

$\tan \alpha_t$ = $\tan \alpha_n/\cos \beta$
$\tan \beta_b$ = $\tan \beta \cos \alpha_t$
d = $z\, m_n/ \cos \beta$
d_b = $d \cos \alpha_t = d_w \cos \alpha_{tw}$
a = $0.5\, (d_{w1}+d_{w2})$
z_n = $z/(\cos^2\beta_b \cos\beta)$
m_t = $m_n/\cos \beta$
inv α = $\tan \alpha - \pi\alpha/180$; α : angle in degrees
inv α_{tw} = inv $\alpha_t + 2 \tan \alpha_n\, (x_1+x_2)/(z_1+z_2)$

$$\varepsilon_\alpha = \frac{0.5\sqrt{d_{a1}^2 - d_{b1}^2} \pm 0.5\sqrt{d_{a2}^2 - d_{b2}^2} - a\sin\alpha_{tw}}{\frac{\pi m_n \cos\alpha_t}{\cos\beta}}$$

the positive sign is used for external gears, the negative sign for internal gears;

ε_β = $b \sin \beta/\pi \cdot m_n$ (mm);

for double helix, b is to be taken as the width of one helix;

$\varepsilon_\gamma = \varepsilon_\alpha + \varepsilon_\beta$
v = $d_{1,2} \cdot n_{1,2}/19099$

(c) Nominal tangential load, F_t

The nominal tangential load, F_t, tangential to the reference cylinder and perpendicular to the relevant axial plane, is calculated directly from the maximum continuous power transmitted by the gear set by means of the following equations:

$T_{1,2}$ = $9549\, P/n_{1,2n}$
F_t = $2000\, T_{1,2}/d_{1,2}$

(d) General influence factors

(i) Application factor, K_A

The application factor, K_A, accounts for dynamic overloads from sources external to the gearing. K_A, for gears designed for infinite life is defined as the ratio between the maximum repetitive cyclic torque applied to the gear set and the nominal rated torque. When operating near a critical speed of the drive system, a careful analysis of conditions must be made. The application factor, K_A, is to be determined by measurements or by system analysis acceptable to the Society. Where a value determined in such a way cannot be supplied, the following values can be considered:

(1) Main propulsion

a) diesel engine with hydraulic or electro-magnetic slip coupling: 1.00

b) diesel engine with high elasticity coupling: 1.30

c) diesel engine with other couplings: 1.50

(2) Auxiliary gears

a) electric motor, diesel engine with hydraulic or electromagnetic slip coupling: 1.00

b) diesel engine with high elasticity coupling: 1.20

c) diesel engine with other couplings: 1.40

(ii) Load sharing factor, K_γ

The load sharing factor, K_γ accounts for the maldistribution of load in multiple path transmissions (dual tandem, epicyclical, double helix, etc.). K_γ is defined as the ratio between the maximum load through an actual path and the evenly shared load. The factor mainly depends on accuracy and flexibility of the branches. The load sharing factor, K_γ, is to be determined by measurements or by system analysis. Where a value determined in such a way cannot be supplied, the following values can be considered for epicyclical gears:

(1) up to 3 planetary gears: 1.00

(2) 4 planetary gears: 1.20

(3) 5 planetary gears: 1.30

(4) 6 planetary gears and over: 1.40

(iii) Dynamic factor, K_v

The dynamic factor, K_v, accounts for internally generated dynamic loads due to vibrations of pinion and wheel against each other. K_v is defined as the ratio between the maximum load which dynamically acts on the tooth flanks and the maximum externally applied load (F_t K_A K_γ). The dynamic factor, K_v, can be calculated as follows: The method may be applied only to cases where all the following conditions are satisfied:

(1) steel gears of heavy rims sections

(2) $F_t/b > 150$ N/mm

(3) $z_1 < 50$

(4) running speed in the subcritical range:

a) for helical gears: $(V \cdot Z_1)/100 < 14$ (m/s)

b) for spur gears: $(V \cdot Z_1)/100 < 10$ (m/s)

This method may be applied to all types of gears if

$(V \cdot Z_1)/100 < 3$ (m/s)

For helical gears of overlap ratio > unity K_v is obtained from Fig. IV 5-1. For spur gears K_v is obtained from Fig. IV 5-2. For helical gears of overlap ratio < unity K_v is obtained by means of linear interpolation between the values obtained from Fig. IV 5-1 and IV 5-2.

$$K_v = K_{v2} - \varepsilon_\beta (K_{v2} - K_{v1})$$

Where:

K_{v1} is the K_v value for helical gears, given by Fig. IV 5-1.

K_{v2} is the K_v value for spur gears, given by Fig. IV 5-2.

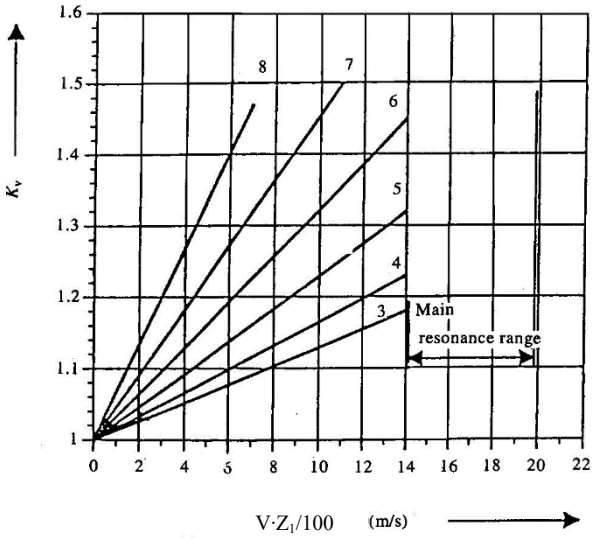

Fig. IV 5-1
Dynamic Factor for Helical Gear.
ISO Grades of Accuracy 3-8

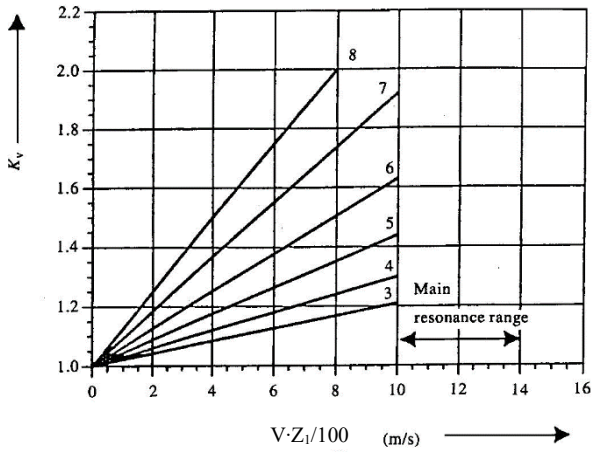

Fig. IV 5-2
Dynamic Factor for Spur Gear.
ISO Grades of Accuracy 3-8

Note: ISO grades of accuracy according to ISO 1328. In case of mating gears with different grades of accuracy the grade corresponding to the lower accuracy is to be used.

Table IV 5-1
Values of the Factor K_1 for the Calculation of K_v

	K_1 ISO GRADES OF ACCURACY					
	3	4	5	6	7	8
Spur gears	0.022	0.030	0.043	0.0620	0.092	0.125
Helical gears	0.0125	0.0165	0.0230	0.0330	0.0480	0.0700

K_v can also be determined as follows:

$$K_v = 1 + K_1 (V \cdot Z_1)/100$$

K_1 values are specified in the following Table IV 5-1.

(iv) Face load distribution factors, $K_{H\beta}$ and $K_{F\beta}$

The face load distribution factors, $K_{H\beta}$ for contact stress, $K_{F\beta}$ for tooth root bending stress, account for the effects of non-uniform distribution of load across the facewidth.

$K_{H\beta}$ is defined as follows:

$$K_{H\beta} = \frac{\text{maximum load per unit facewidth}}{\text{mean load per unit facewidth}}$$

$K_{F\beta}$ is defined as follows:

$$K_{F\beta} = \frac{\text{maximum bending stress at tooth root per unit facewidth}}{\text{mean bending stress at tooth root per unit facewidth}}$$

The mean bending stress at tooth root relates to the considered facewidth b_1 resp. b_2.

$K_{F\beta}$ can be expressed as a function of the factor $K_{H\beta}$.

(1) In case the hardest contact is at the end of the facewidth $K_{F\beta}$ is given by the following equations:

$$K_{F\beta} = K_{H\beta}^{N}$$

$$N = \frac{\left(\frac{b}{h}\right)^2}{1 + \frac{b}{h} + \left(\frac{b}{h}\right)^2}$$

(b/h) = facewidth/tooth height ratio, the minimum of b_1/h_1 or b_2/h_2.
For double helical gears, the facewidth of only one helix is to be used.

(2) In case of gears where the end of the face width are lightly loaded or unloaded (end relief or crowning):

$$K_{F\beta} = K_{H\beta}$$

(v) Transverse load distribution factors, $K_{H\alpha}$ and $K_{F\alpha}$

The transverse load distribution factors, $K_{H\alpha}$ for contact stress and $K_{F\alpha}$ for tooth root bending stress, account for the effects of pitch and profile errors on the transversal load distribution between two or more pairs of teeth in mesh.

The factors $K_{H\alpha}$ and $K_{F\alpha}$ mainly depend on:

(1) total mesh stiffness;

(2) total tangential load F_t, K_A, K_γ, K_v, $K_{H\beta}$;

(3) base pitch error;

(4) tip relief;

(5) running-in allowances.

5.3.2 Surface durability (pitting)

(a) Scope and general remarks

The criterion for surface durability is based on the Hertz pressure on the operating pitch point or at the inner point of single pair contact. The contact stress σ_H must be equal to or less than the permissible contact stress σ_{HP}.

(b) Basic equations

(i) Contact stress

$$\sigma_H = \sigma_{HO}\sqrt{K_A K_\gamma K_v K_{H\alpha} K_{H\beta}} \leq \sigma_{HP}$$

where:

σ_{HO} = Basic value of contact stress for pinion and wheel

$$\sigma_{HO} = Z_B Z_H Z_\varepsilon Z_\beta Z_E \sqrt{\frac{F_t}{d_1 b}\frac{(u+1)}{u}} \quad \text{for pinion}$$

$$\sigma_{HO} = Z_D Z_H Z_\varepsilon Z_\beta Z_E \sqrt{\frac{F_t}{d_1 b}\frac{(u+1)}{u}} \quad \text{for wheel}$$

where:

Z_B = Single pair mesh factor for pinion; 5.3.2(b)(iii)
Z_D = Single pair mesh factor for wheel; 5.3.2(b)(iii)
Z_H = Zone factor; 5.3.2(b)(iv)
Z_E = Elasticity factor; 5.3.2(b)(v)
Z_ε = Contact ratio factor; 5.3.2(b)(vi)
Z_β = Helix angle factor; 5.3.2(b)(vii)
F_t = Nominal tangential load at reference cylinder
In the transverse section; 5.3.1(a)
b = Common facewidth;
d_1 = Reference diameter of pinion;
u = Gear ratio
(for external gears u is positive, for internal gears u is negative);

K_A, K_γ, K_v, $K_{H\alpha}$ and $K_{H\beta}$, see 5.3.1.

(ii) Permissible contact stress

The permissible contact stress σ_{HP} is to be evaluated separately for pinion and wheel:

$$\sigma_{HP} = (\sigma_{Hlim} Z_N/S_H) \times Z_L Z_v Z_R Z_W Z_X$$

where:

σ_{Hlim}	=	Endurance limit for contact stress;	5.3.2(b)(viii);
Z_N	=	Life factor for contact stress;	5.3.2(b)(ix)
Z_L	=	Lubrication factor;	5.3.2(b)(x)
Z_v	=	Speed factor;	5.3.2(b)(x)
Z_R	=	Roughness factor;	5.3.2(b)(x)
Z_W	=	Hardness ratio factor;	5.3.2(b)(xi)
Z_X	=	Size factor for contact stress;	5.3.2(b)(xii)
S_H	=	Safety factor for contact stress;	5.3.2(b)(xiii)

(iii) Single pair mesh factors, Z_B and Z_D

The single pair mesh factors, Z_B for pinion and Z_D for wheel, account for the influence on contact stresses of the tooth flank curvature at the inner point of single pair contact in relation to Z_H.

The single pair mesh factors, Z_B for pinions and Z_D for wheels, can be determined as follows:

For spur gears, $\varepsilon_\beta = 0$

Z_B = M_1 or 1 whichever is the larger value.

Z_D = M_2 or 1 whichever is the larger value.

$$M_1 = \frac{\tan\alpha_{tw}}{\sqrt{\left[\sqrt{\left(\frac{d_{a1}}{d_{b1}}\right)^2 - 1} - \left(\frac{2\pi}{Z_1}\right)\right]\left[\sqrt{\left(\frac{d_{a2}}{d_{b2}}\right)^2 - 1} - (\varepsilon_\alpha - 1)\left(\frac{2\pi}{Z_2}\right)\right]}}$$

$$M_2 = \frac{\tan\alpha_{tw}}{\sqrt{\left[\sqrt{\left(\frac{d_{a2}}{d_{b2}}\right)^2 - 1} - \left(\frac{2\pi}{Z_2}\right)\right]\left[\sqrt{\left(\frac{d_{a1}}{d_{b1}}\right)^2 - 1} - (\varepsilon_\alpha - 1)\left(\frac{2\pi}{Z_1}\right)\right]}}$$

For helical gears when $\varepsilon_\beta \geq 1$

$Z_B = Z_D = 1$

For helical gears when $\varepsilon_\beta < 1$ the values of Z_B, Z_D are determined by linear interpolation between Z_B, Z_D for spur gears and Z_B, Z_D for helical gears having $\varepsilon_\beta \geq 1$.

Thus:

Z_B = $M_1 - \varepsilon_\beta (M_1 - 1)$ and $Z_B \geq 1$

Z_D = $M_2 - \varepsilon_\beta (M_2 - 1)$ and $Z_D \geq 1$

(iv) Zone factor, Z_H

The zone factor, Z_H, accounts for the influence on the Hertzian pressure of tooth flank curvature at pitch point and relates the tangential force at the reference cylinder.

The zone factor, Z_H, can be calculated as follows:

$$Z_H = \sqrt{\frac{2\cos\beta_b \cos\alpha_{tw}}{\cos^2\alpha_t \sin\alpha_{tw}}}$$

(v) Elasticity factor, Z_E

The elasticity factor, Z_E, accounts for the influence of the material properties E (modulus of elasticity) and ν (Poisson's ratio) on the Hertz pressure.

The elasticity factor, Z_E, for steel gears (E = 206000 N/mm^2, ν = 0.3) is equal to:

Z_E = 189.8 ($N^{1/2}$/mm)

(vi) Contact ratio factor, Z_ε

The contact ratio factor, Z_ε, accounts for the influence of the transverse contact ratio and the overlap ratio on the specific surface load of gears. The contact ratio factor, Z_ε, can be calculated as follows:

(1) Spur gears:

$$Z_\varepsilon = \sqrt{\frac{4-\varepsilon_\alpha}{3}}$$

(2) Helical gears:

$$-\text{for } \varepsilon_\beta < 1 \quad Z_\varepsilon = \sqrt{\frac{4-\varepsilon_\alpha}{3}\left(1-\varepsilon_\beta\right)+\frac{\varepsilon_\beta}{\varepsilon_\alpha}}$$

$$-\text{for } \varepsilon_\beta \geq 1 \quad Z_\varepsilon = \sqrt{\frac{1}{\varepsilon_\alpha}}$$

(vii) Helix angle factor, Z_β

The helix angle factor, Z_β, accounts for the influence of helix angle on surface durability, allowing for such variables as the distribution of load along the lines of contact. Z_β is dependent only on the helix angle.

The helix angle factor, Z_β, can be calculated as follows:

$$Z_\beta = \frac{1}{\sqrt{\cos\beta}}$$

Where β is the reference helix angle.

(viii) Endurance limit for contact stress, σ_{Hlim}

For a given material, σ_{Hlim} is the limit of repeated contact stress which can be permanently endured. The value of σ_{Hlim} can be regarded as the level of contact stress which the material will endure without pitting for at least 50×10^6 load cycles.

For this purpose, pitting is defined by:

(1) for not surface hardened gears:
pitted area > 2% of total active flank area;

(2) for surface hardened gears:
pitted area > 0.5% of total active flank area, or > 4% of one particular tooth flank area.

The σ_{Hlim} values are to correspond to a failure probability of 1% or less.

The endurance limit for contact stress σ_{Hlim}, can be determined, in general, making reference to values indicated in ISO 6336/5, quality MQ.

(ix) Life factor, Z_N

The life factor, Z_N, accounts for the higher permissible contact stress in case a limited life (number of cycles) is required. The life factor, Z_N, can be determined according to method B outlined in the ISO 6336/2 standard.

(x) Influence factors on lubrication film, Z_L, Z_v and Z_R

The lubricant factor, Z_L, accounts for the influence of the type of lubricant and its viscosity, the speed factor, Z_v, accounts for the influence of the pitch line velocity and the roughness factor, Z_R, accounts for the influence of the surface roughness on the surface endurance capacity. The factors may be determined for the softer material where gear pairs are of different hardness.

(1) Lubricant factor, Z_L

$$Z_L = C_{ZL} + \frac{4(1.0 - C_{ZL})}{\left(1.2 + \frac{134}{\nu_{40}}\right)^2}$$

In the range 850 N/mm^2,

$$C_{ZL} = \left(\frac{\sigma_{Hlim} - 850}{350} \cdot 0.08\right) + 0.83$$

If $\sigma_{Hlim} < 850$ N/mm^2, take $C_{ZL} = 0.83$.
If $\sigma_{Hlim} > 1{,}200$ N/mm^2, take $C_{ZL} = 0.91$.

where:
ν_{40} = Nominal kinematic viscosity of the oil at 40°C,

(2) Speed factor, Z_v
In the range 850 N/mm$^2 \leq \sigma_{Hlim} \leq 1{,}200$ N/mm^2, C_{Zv} can be calculated as follows:

$$Z_v = C_{Zv} + \frac{2(1.0 - C_{Zv})}{\sqrt{0.8 + \frac{32}{v}}}$$

$$C_{Zv} = \left(\frac{\sigma_{Hlim} - 850}{350} \cdot 0.08\right) + 0.85$$

(3) Roughness factor, Z_R

$$Z_R = \left(\frac{3}{R_{Z10}}\right)^{C_{ZR}}$$

Where:

$$R_Z = \frac{R_{Z1} + R_{Z2}}{2}$$

The peak-to-valley roughness determined for the pinion R_{Z1} and for the wheel R_{Z2} are mean values for the peak-to-valley roughness R_Z measured on several tooth flanks R_Z.

$$R_{Z10} = R_Z \sqrt[3]{\frac{10}{\rho_{red}}}$$

relative radius of curvature:

$$\rho_{red} = \frac{\rho_1 \rho_2}{\rho_1 + \rho_2}$$

Wherein:
$\rho_{1,2}$ = $0.5 \cdot d_{b1,2} \cdot \tan\alpha_{tw}$
(also for internal gears, d_b negative sign)
If the roughness stated is an R_a value (= C_{LA} value) (= A_A value) the following approximate relationship can be applied:

$R_a = C_{LA} = A_A = R_Z/6$

In the range 850 N/mm$^2 \leq \sigma_{Hlim} \leq 1{,}200$ N/mm^2, C_{ZR} can be calculated as follows:

$C_{ZR} = 0.32 - 0.0002\ \sigma_{Hlim}$
If $\sigma_{Hlim} <$ 850 N/mm^2, take $C_{ZR} = 0.150$.
If $\sigma_{Hlim} >$ 1,200 N/mm^2, take $C_{ZR} = 0.080$.

(xi) Hardness ratio factor, Z_W

The hardness ratio factor, Z_W, account for the increase of surface durability of a soft steel gear meshing with a significantly harder gear with a smooth surface.

Z_W apply to the soft gear only.

$$Z_W = 1.2 - \frac{H_B - 130}{1700}$$

Where:

H_B = Brinell hardness of the softer material.

For $H_B < 130$, $Z_W = 1.2$ will be used.

For $H_B > 470$, $Z_W = 1.0$ will be used.

(xii) Size factor, Z_X

The size factor, Z_X, accounts for the influence of tooth dimensions on permissible contact stress and reflects the non-uniformity of material properties.

For through-hardened gears and for surface-hardened gears with adequate case depth relative to tooth size and radius of relative curvature $Z_X = 1$. When the case depth is relatively shallow then a smaller value of Z_X is to be chosen.

(xiii) Safety factor for contact stress, S_H

The following guidance values can be adopted:

(1) Main propulsion gears: 1.20 ~ 1.40.

(2) Auxiliary gears: 1.15 ~ 1.20.

For gearing of duplicated independent propulsion or auxiliary machinery, duplicated beyond that required for class, a reduced value can be assumed at the discretion of the Society.

5.3.3 Tooth root bending strength

(a) Scope and general remarks

The criterion for tooth σ_F root bending strength is the permissible limit of local tensile strength in the root fillet. The root stress σ_F and the permissible root stress σ_{FP} are to be calculated separately for the pinion and the wheel.

σ_F must not exceed σ_{FP}.The following definitions apply to gears having rim thickness greater than 3.5 mm.

(b) Basic equations

(i) Tooth root bending stress for pinion and wheel

$$\sigma_F = (F_t/bm_n) Y_F\, Y_S\, Y_\beta\, K_A\, K_\gamma\, K_v\, K_{F\alpha}\, K_{F\beta} \le \sigma_{FP}$$

where:

Y_F	=	Tooth form factor;	5.3.3 (c)
Y_S	=	Stress correction factor;	5.3.3 (d)
Y_β	=	Helix angle factor;	5.3.3 (e)
F_t, K_A, K_γ, K_v, $K_{F\alpha}$, $K_{F\beta}$			5.3.1
b			5.3.1 (d)

(ii) Permissible tooth root bending stress for pinion and wheel

$$\sigma_{FP} = (\sigma_{FE}\, Y_d/S_F)\, Y_{\sigma reIT}\, Y_{RreIT}\, Y_X$$

where:

σ_{FE}	=	Bending endurance limit;
Y_d	=	Design factor;
Y_N	=	Life factor;
$Y_{\sigma reIT}$	=	Relative notch sensitivity factor;
Y_{ReIT}	=	Relative surface factor;
Y_X	=	Size factor;

S_F = Safety factor for tooth root bending stress.

(c) Tooth form factor, Y_F

The tooth form factor, Y_F, represents the influence on nominal bending stress of the tooth form with load applied at the outer point of single pair tooth contact. Y_F is to be determined separately for the pinion and the wheel. In the case of helical gears, the form factors for gearing are to be determined in the normal section, i.e. for the virtual spur gear with virtual number of teeth z_n.

$$Y_F = \frac{6\frac{h_F}{m_n}\cos\alpha_{Fen}}{\left(\frac{S_{Fn}}{m_n}\right)^2\cos\alpha_n}$$

where:

h_F = Bending moment arm for tooth root bending stress for application of load at the outer point of single tooth pair contact, in mm;

s_{Fn} = Tooth root chord in the critical section, in mm;

α_{Fen} = Pressure angle at the outer point of single tooth pair contact in the normal section.

The result of rating calculations made by following this method are acceptable for normal pressure angles up to 25° and reference helix angles up to 30°.

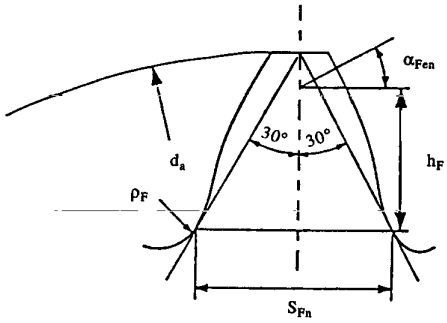

Fig. IV 5-3
For the Calculation of h_F, s_{Fn} and α_{Fen}

(d) Stress correction factor, Y_S

The stress correction factor, Y_S, is used to convert the nominal bending stress to the local tooth root stress, taking into account that not only bending stresses arise at the root. Y_S applies to the load application at the outer point of single tooth pair contact. Y_S is to be determined separately for the pinion and for the wheel.

The stress correction factor, Y_S, can be determined with the following equation (having range of validity: $1 \le q_s < 8$):

$$Y_S = (1.2 + 0.13L)q_S^{\frac{1}{1.12+\frac{2.3}{L}}}$$

$$q_S = \frac{S_{Fn}}{2\rho_F}$$

Where:

q_s = Notch parameter;

ρ_F = Root fillet radius in the critical section;

L = S_{Fn} / h_F

For h_F and S_{Fn} see 5.3.3 (c).

(e) Helix angle factor, Y_β

The helix angle factor, Y_β, converts the stress calculated for a point loaded cantilever beam representing the substitute gear tooth to the stress induced by a load along an oblique load line into a cantilever plate which represents a helical gear tooth. The helix angle factor, Y_β can be calculated as follows:

$$Y_\beta = 1 - \varepsilon_\beta \cdot \frac{\beta}{120}$$

where:

β = Reference helix angle in degrees.

One (1.0) is substituted for ε_β when $\varepsilon_\beta > 1.0$, and 30° is substituted for $\beta > 30°$.

(f) Bending endurance limit, σ_{FE}

For a given material, σ_{FE} is the local tooth root stress which can be permanently endured. The number of 3×10^6 cycles is regarded as the beginning of the endurance limit. σ_{FE} is defined as the unidirectional pulsating stress with a minimum stress of zero (disregarding residual stresses due to heat treatment). Other conditions such as alternating stress or pre-stressing etc. are covered by the design factor Y_d. The σ_{FE} values are to correspond to a failure probability 1% or less. The bending endurance limit, σ_{FE} can be determined, in general, making reference to values indicated in ISO 6336/5, quality MQ.

(g) Design factor, Y_d

The design factor, Y_d, takes into account the influence of load reversing and shrinkfit prestressing on the tooth root strength, relative to the tooth root strength with unidirectional load as defined for σ_{FE}. The design factor, Y_d, for load reversing, can be determined as follows:

Y_d = 1.00 In general;

Y_d = 0.9 For gears with occasional part load in reversed direction, such as main wheel in reversing gearboxes;

Y_d = 0.7 For idler gears.

(h) Life factor, Y_N

The life factor, Y_N, accounts for the higher tooth root bending stress permissible in case a limited life (number of cycles) is required.

The life factor, Y_N, can be determined according to method B outlined in ISO 6336/3 standard.

(i) Relative notch sensitivity factor, $Y_{\delta relT}$

The relative notch sensitivity factor, $Y_{\delta relT}$, indicates the extent to which the theoretically concentrated stress lies above the fatigue endurance limit. The factor mainly depends on material and relative stress gradient. The relative notch sensitivity factor, $Y_{\delta relT}$, can be determined as follows:

(i) for notch parameter values (see 5.3.3 (d)) included in the range $1.5 < q_s < 4$, it can be assumed:

$Y_{\delta relT}$ = 1.0

(ii) for notch parameter outside said range $Y_{\delta relT}$ can be calculated as outlined in the reference standard.

(j) Relative surface factor, Y_{RrelT}

The relative surface factor, Y_{Rre1T}, takes into account the dependence of the root strength on the surface condition in the tooth root fillet, mainly the dependence on the peak to valley surface roughness. The relative surface factor, Y_{RrelT} can be determined as follows:

$R_z < 1$	$1 \le R_z \le 40$	
1.120	$1.675 - 0.53 \cdot (R_z+1)^{0.1}$	case hardened steels through - hardened steels ($\sigma_\beta \ge 800$ N/mm^2)
1.070	$5.3 - 4.2\ (R_z+1)^{0.01}$	normalized steels ($\sigma_\beta < 800$ N/mm^2)
1.025	$4.3\text{-}3.26\ (R_z+1)^{0.005}$	nitrided steels

Where:

R_z = Mean peak-to-valley roughness of tooth root fillets, μm.

If the roughness stated is an R_a value (= C_{LA} value) (= A_A value) the following approximate relationship can be applied:

$R_a = C_{LA} = A_A = R_z/6$

(k) Size factor, Y_X

The size factor, Y_X, takes into account the decrease of the strength with increasing size.

The size factor, Y_X, can be determined as follows:

$Y_X = 1.00$	for $m_n \leq 5$	generally
$Y_X = 1.03 - 0.06\ m_n$	for $5 < m_n < 30$	normalised and through – hardened steels
$Y_X = 0.85$	for $m_n \geq 30$	
$Y_X = 1.05 - 0.01\ m_n$	for $5 < m_n < 25$	surface hardened steels
$Y_X = 0.80$	for $m_n \geq 25$	

(l) Safety factor for tooth root bending stress, S_F

The safety factor for tooth root bending stress, S_F, can be assumed by the Society taking into account the type of application.

(i) Main propulsion gears: 1.55 ~ 2.00.

(ii) Auxiliary gears: 1.40 ~ 1.45.

5.4 Workmanship

5.4.1 Gear cutting

(a) The constructional precision of the complete gear cutting machinery is to comply with satisfactory, recognized standards for high quality machine tools.

(b) All gears are to be cut on machines which are maintained at a high standard of accuracy, and the gear cutting machinery used is to operate preferably under conditions of temperature control.

(c) Application of hand tools, filing or scraping of the active tooth surfaces is usually not permitted. A limited application of honing when tip-relieving may be permitted to remove local high spots appearing after the last surface finish. All sharp edges on the tip and ends of gear teeth after cutting or finishing are to be removed.

5.4.2 Tooth hardening

(a) The surface treatments of the teeth are to ensure the continuity of the hardened zone on the whole height of the tooth flank and more particularly on the root fillet. The thickness of the hardened zone remaining after finishing is to be at least equal to twice the depth corresponding to the maximum shear stress.

(b) Where the pinion and the toothed portion of the gear wheel are case-hardened and tempered, the teeth flanks are to be ground while the bottom lands of the teeth remain only case-hardened. Where the teeth are nitrided, the thickness of the hardened zone is not to be less than 0.5 mm and the grinding of nitrided teeth is normally not required. The use of any other hardening of the teeth such as induction or flame hardening, is to be submitted for special consideration.

5.4.3 Shrinkage

The appropriate shrinkage conditions of the rim and pinion or gear wheel body are to be submitted for consideration. The use of other means of fixation such as pins is not permissible.

5.5 Tests and Inspections

5.5.1 Hardening

Where the teeth of gears are made of through-hardened steels, the test specimens representative of the hardened teeth are normally to be provided for examination and to be demonstrated in advance that the thickness of the hardened zone is satisfactory. The hardened zone of finished teeth is to be hardness tested and inspected with suitable non-destructive test methods.

5.5.2 Welding

When welding is employed in the construction of gearing and couplings, the test specimens representative of the welded joints used in the construction are to be provided for examination and mechanical test where deemed necessary by the Surveyor.

5.5.3 Dynamic balancing

Finished pinions and wheels are to be dynamically balanced in two planes where their pitch line velocity exceeds 25 m/s.

Where their pitch line velocity does not exceed 25 m/s or where dynamic balance is impracticable due to size, weight, speed or construction of units, the parts may be statically balanced in a single plane. The residual unbalance in each plane is not to exceed the value determined by the following equations:

$$B = 24 \cdot W/N$$

where:

B = Maximum allowable residual unbalance, in Nmm;

W = Weight of rotating part, in N;

N = rpm at rated speed.

5.5.4 Accuracy

(a) The surface finish of teeth and the accuracy of gear cutting in all gears are to be inspected and demonstrated at the workshop to the satisfaction of the Surveyor.

(b) Undulations, i.e. the periodic or semiperiodic departure of the actual tooth surface from the design surface, are to be measured at approximately mid-depth of the working surface of the tooth. The undulation records are to be submitted for inspection.

(c) Cumulative pitch errors are to be measured by taking readings in the transverse plane in equal spans around the total circumference of the gear wheel or pinion. The results are to be plotted in the usual manner and submitted for inspection.

5.5.5 Alignment and trial

(a) The accuracy of gear meshing is to be verified in the presence of the Surveyor by coating pinion and gear wheel in turn with a thin film of copper sulphate, an approved spirit lacquer, or other equivalent prior to the commencement of the trial, and turning the gears with sufficient pressure to ensure contact between teeth. In general, the meshing area is to be consistent with that which will result in evenly distributed tooth contact at full load. For through-hardened gears, it is recommended that the contact is at least 40% of the working depth for 35% of the length, and at least 20% of the working depth for a further 35% of the length on each helix, without hard bearing on the tooth flank area.

(b) The gear manufacturer is required to verify by means of measurements in the presence of the Surveyor that the gear case is free from distortion when erected on-board and secured to its seating.

(c) The on-board trial of gearing is to be carried out for a sufficient duration during sea trial to prove that the gears operate satisfactorily under service conditions. After sea trial, the teeth of all gear elements are to be inspected in the presence of the Surveyor. The contact marking after run under service load is also to be verified by using a suitable lacquer applied prior to the commencement of the trial.

(d) The couplings are to be subjected to test at the workshop. Where a test cannot be carried out at the workshop, the operational trial is to be carried out after installation on-board the ship.

(e) Inspection items for rubber elastic couplings are to be determined in accordance with the followings:

(i) Visual inspection

(ii) Review of mechanical and chemical tests and NDT report for material of main part

(iii) Rated torque test

Torque is applied at a rate of 20% of rated torque per minute to the elastic rubber ring on the static torsion test bench. The static torsional angle φ_n at nominal torsional moment T_n is measured for two times, then the initial state is reinstated and maintained for 5 mins and the average value taken. The results are to meet the design requirements.

(iv) Maximum torque test

When the maximum torque test is carried out (at rated torque equal to 3 times or 4 times of the test torque, or the maximum test torque the coupling can withstand), the torque is applied at a rate of 20% the rated torque per minute to the elastic rubber ring on the static torsion test bench till the maximum torque T_{max}. The coupling's maximum torsional angle Ψ_{max} is measured and recorded. Then this maximum torsional angle is kept for 3 mins. At the same time, the surface quality of the elastic rubber ring is visually inspected. The results are to meet the design requirements.

(v) Other tests deemed necessary by the Society.

(f) Inspection items for elastic damping leaf couplings are to be determined in accordance with the followings:

(i) Visual inspection

(ii) Review of mechanical and chemical tests and NDT report for material of main part

(iii) Tightness test

The coupling is immersed in a vessel containing antirust water at room temperature. Compressed air is introduced to build a pressure of 0.5 MPa and this pressure is held for 5 min. All seals of the coupling are observed for any sign of leakage.

(iv) Dynamic balance test(only for coupling of revolution speed greater than 1500 rpm)

After the external components of coupling are assembled, the dynamic balance test is to be carried out by the method specified in ISO 1940, the grade of dynamic balance of the external coupling components is not to be less than G6.3.

(v) Other tests deemed necessary by the Society.

(g) Inspection items for other flexible couplings are to be determined by the Society.

Chapter 6
Shafting

6.1 General

6.1.1 The requirements of this Chapter are applicable to normal and accepted types of main shafting of ships propelled by steam turbine, diesel engines or means of electric motors. These requirements are also to be complied with as far as they are applicable to the shafting essential service auxiliaries.

6.1.2 Drawings and data.

(a) The following drawings are to be submitted for approval:

General arrangement of the entire shafting from main engine coupling to propeller, detail drawings of the thrust-, intermediate- and propeller-shafts, stern tube, stern bearing, coupling flanges and coupling bolts, etc.

(b) The following data are to be submitted together with drawings for approval:

Material specifications, strength calculations and calculations regarding torsional vibration as stated in 6.7 of this Part.

6.1.3 Materials

(a) Main shafting and accessories are to be of forged steel. Cast steel couplings may be accepted under certain circumstances. The hot rolled carbon steel bars complying with Part XI may be used for the plain, flangeless shaft. Where parts of the shafting are made of material other than steel, these are to be specially approved by the Society.

(b) The specified minimum tensile strength of steel forgings for main shafting is to be selected within the general limits of 400 to 600 N/mm^2 for carbon steel forgings and not exceeding 800 N/mm^2 for low alloy steel forgings as given in Table XI 8-2, unless otherwise specially approved by the Society.

(c) The materials intended for the thrust-, intermediate- and propeller-shafts, coupling flanges and coupling bolts are to be tested and inspected in the presence of the Surveyor in accordance with the requirements of Part XI or the specifications approved in connection with the design.

(d) Material factor for steel shafting

(i) The formula for scantlings of main shafting and quill shafts in this Part apply on the assumption that the steel used is of a tensile strength of 400 N/mm^2. For steels of higher tensile strength, the final dimensions as calculated by each of their particular formula may be reduced by multiplying the following material factor:

$$f = \sqrt[3]{\frac{560}{S + 160}}$$

(ii) For tensile strength in excess of the following, no further reduction is given:

600 N/mm^2 for propeller and tube shafts, and
800 N/mm^2 for other shafting.

(iii) The material factor for shafts made of materials other than steel will be given special consideration by the Society.

(iv) The notations used in 6.1.3(d)(i) above are defined as follows:

f = Material factor for steel main shafting and quill shafts.
S = Specified minimum tensile strength of steel of which the shafting is designed to be made, in N/mm^2.

(e) Hollow shafts

(i) The outer diameters of the hollow shafts are not to be less than that required by the formulae for the corresponding solid shafts multiplying by the following coefficient:

$$k = \sqrt[3]{\frac{1}{1-\left(\frac{d_i}{d_o}\right)^4}}$$

(ii) However, where the inner bore of the hollow shaft does not exceed 40% of the outer diameter, no increase over diameter required for the corresponding solid shaft need be provided.

(iii) The notations used in 6.1.3(e)(i) above are defined as follows:

k = Multiplying coefficient for hollow shafts.
d_i = Inner bore of hollow shafts, in mm.
d_o = Outer diameter of hollow shafts, in mm.

6.2 Intermediate Shafts

6.2.1 The diameter of the intermediate shaft is not to be less than that obtained from the following formula:

$$d_1 = fFC_1K_1\sqrt[3]{\frac{H}{N}}$$

6.2.2 The notations used in 6.2.1 above are defined as follows:

d_1 = Diameter required for intermediate shaft, in mm.
H = Maximum continuous power transmitted by intermediate shafts, in kW.
N = Corresponding revolutions per minute of shafts at maximum continuous power, in rpm.
f = Material factor as defined in 6.1.3 of this Part.
F = 95 for turbine installations, electric propulsion installations and diesel engine installations through reduction gears or with slip type couplings, and
100 for other diesel engine installations.
C_1 = 1.00 for ocean going and greater coasting service ships, and
0.96 for other ships.
K_1 = Constant as given in Table IV 6-1.

Table IV 6-1
Constant K_1 for Intermediate Shafts

K_1	Description of Intermediate Shafts Designed
1.0	Plain shafts with integral coupling flanges or shrink fit couplings.
1.1	Shafts with keyways where the fillet radii in the transverse section of the bottom of the keyway are to be not less than 0.0125 d_1, and Shafts with transverse or radial holes where the diameter of the hole is not greater than 0.3 d_1 (d_1 is determined with K_1 = 1.0).
1.2	Shafts with longitudinal slots having a length of not more than 1.4 d_1 and a width of not more than 0.2 d_1 (d_1 is determined with K_1 = 1.0)

6.3 Thrust Shafts

6.3.1 The diameter of the thrust shaft is not to be less than that obtained from the following formula:

$$d_2 = 1.1fFC_1\sqrt[3]{\frac{H}{N}}$$

6.3.2 Outside a length equal to the thrust shaft diameter from the collars, the diameter may be gradually reduced to that required for the intermediate shaft with K_1 = 1.0.

6.3.3 The notations used in 6.3.1 above are defined as follows:

d_2 = Diameter required at the collars of the thrust shaft transmitting torque or in way of the axial bearing where a roller bearing is used as a thrust bearing, in mm.

f, F, C_1, H and N are as defined in 6.2.2 of this Part.

6.4 Propeller Shafts and Tube Shafts

6.4.1 The diameter of the propeller shaft and tube shaft is not be less than that obtained from the following formula:

$$d_3 = fK_2\sqrt[3]{\frac{H}{N}}$$

6.4.2 Propeller shafts which run in stern tubes and tube shafts may have the diameter forward of the length to the forward stern tube seal gradually reduced to the diameter of the intermediate shaft. Abrupt changes in shaft section at the propeller shaft or tube shaft to intermediate shaft couplings are to be avoided.

6.4.3 For the propeller shaft of the ship registered with the notation **Ice Class**, see Chapter 10 or Chapter 10A of Part III.

6.4.4 The notations used in 6.4.1 above are defined as follows:

d_3 = Diameter required for propeller shaft and tube shaft, in mm.
f = Material factor as defined in 6.1.3 of this Part.
K_2 = Constant as given in Table IV 6-2 for propeller shaft, and
115 for tube shaft.

Table IV 6-2
Constant K_2 for Propeller Shafts

Zone	Design	Category		
		A	B	C
I	(1)	122	126	132
	(2)	126		
II	–	115	115	121
III	–			

where:

The zone, design and category to be applied for the calculation of the propeller shaft diameter are defined as follows:

(a) Zone

I: For the shaft diameter extending over the portion from immediatley forward of the forward face of the propeller hub (or the forward face of the propeller shaft flange, if applicable) to a length not less than that to the forward edge of the bearing immediately forward the propeller or 2.5 d_3, whichever is the greater.

II: For the shaft diameter extending over the portion from the forward end of the length required by Zone I to the forward end of the stern bearing seal.

III: For the shaft diameter extending over the portion from the forward end of the forward stern tube seal to the coupling flange joining to the intermediate shaft.

(b) Design

(1) For a shaft carrying a keyless propeller, or where the propeller is attached to an integral flange.

(2) For a shaft carrying a keyed propeller.

(c) Category

A: Where a shaft is fitted with a continuous liner or is oil lubricated and provided with an approved type of oil sealing gland.

B: For a shaft of corrosion resistant material which is exposed to sea water.

C: For a shaft of non-corrosion resistant material which is exposed to sea water.

6.4.5 Fixing of Propellers to Shafts

(a) Where propeller is force fitted on the propeller shaft, the fixing part is to be of sufficient strength against torque to be transmitted.

(b) Where a key is provided to fixing part, ample fillets are to be provided at the corners of the keyway and key is to have a true fit in the keyway. The fore end of keyway on the propeller shaft is to be rounded smoothly for avoiding an excessive stress concentration.

6.5 Other Shafts

The diameter of shafts transmitting power to generators or essential auxiliary machinery is to, in principle, conform to the requirements in 6.2.

6.6 Shafting Accessories

6.6.1 Coupling bolts

(a) The diameter of fitted coupling bolts at the joining face of the coupling is not to be less than that obtained from the following formula:

$$d_4 = 0.65\sqrt{\frac{d_1^3(S_s + 160)}{ZDS_b}}$$

(b) If the transmission of the torque is based on friction between the mating surfaces of flange couplings, special consideration will be given to the design.

6.6.2 Coupling flanges

(a) The thickness of coupling flanges at the pitch circle of the bolt holes is not to be less than the required diameter of the coupling bolts as obtained from 6.6.1(a) of this Part paying due regard to the minimum tensile strength of the steel of which the coupling flanges are designed to make. However, the thickness of the coupling flange is in no case to be less than 20% of the required diameter of the corresponding shaft.

(b) The fillet between coupling flange and shaft is to have a radius not less than 8% of the diameter of the corresponding shaft provided that recesses are to be avoided in way of bolt heads and nuts.

(c) Where a coupling flange is separate from the shafts, the arrangement is to be submitted for consideration. In this case, the coupling flange is to be of cast or forged steel and provision is to be made for the coupling to resist any twisting force and astern pull.

6.6.3 Shaft liners

(a) The thickness of shaft liner to be fitted to the tube shaft or propeller shaft is not to be less than that obtained from the following formula:

$t_1 = 0.03d_3 + 7.5$
$t_2 = 0.75\ t_1$

(b) The continuous liner is to be cast in one length. If it is made of 2 or more lengths, the jointing of the separate pieces is to be made with an approved method of fusion through the whole thickness of the liner or by an approved rubber lining. The joint between the separate liners is not to be located in way of the bushing or stern gland.

(c) The liner is to be securely shrunk on or forced upon the shaft by pressure. Locking device is not to be used for securing purpose. If the liner does not fit the shaft tightly between the bearing portions, the space between the shaft and liner is to be filled by force with a compound insoluble in water and non-corrosive.

(d) The bronze liner is to be made of a high grade composition, free from porosity and other defects, and is to prove tight under hydraulic pressure test as stated in 6.13.1 of this Part.

6.6.4 Bearings

The stern tube gland for propeller shaft and the shaft tunnel bearings for intermediate shafts are to be accessible at all times without shifting of cargo and to be provided with efficient means of lubrication. The length of the bearing in the stern bush next to and supporting the propeller is to be as follows.

(a) Oil lubricated bearings of white metal

(i) The length of white metal lined bearings is to be not less than 2.0 times the rule diameter of the shaft in way of the bearing.

(ii) The length of the bearing may be less provided the normal bearing pressure is not more than 8 bar as determined by static bearing reaction calculation taking into account shaft and propeller weight which is deemed to be exerted solely on the aft bearing divided by the projected area of the shaft. However, the minimum length is to be not less than 1.5 times the actual diameter.

(iii) Where the stern bearing is white metal lined and lubricated by oil or grease, the following are to be complied with:

(1) The oil sealing gland is to be of an approved type and capable of operating under the various sea water temperatures it may be subject to in service.

(2) The space between propeller shaft and stern tube is to be kept filled with oil or grease of good quality. The stern bearing is to be provided with proper grooves for oil, air and possible accumulation of dirt. Pipes and cocks for supplying and drawing off oil as well as for air are to be fitted.

(3) Where lubrication is made by means of gravity, the lubricating oil tank is to be located above the load water line and provided with a low level alarm.

(4) Means are to be provided, where necessary, for cooling the lubricating oil of the stern bearing.

(b) Oil lubricated bearings of synthetic rubber, reinforced resin or plastic materials

(i) For bearings of synthetic rubber, reinforced resin or plastics materials which are approved for use as oil lubricated stern bush bearings, the length of the bearing is to be not less than 2.0 times the rule diameter of the shaft in way of the bearing.

(ii) The length of bearing may be less provided the nominal bearing pressure is not more than 6 bar as determined by static bearing reaction calculation taking into account shaft and propeller weight which is deemed to be exerted solely on the aft bearing divided by the projected area of the shaft. However, the minimum length is to be not less than 1.5 times the actual diameter. Where the material has proven satisfactory testing and operating experience, consideration may be given to an increased bearing pressure.

(iii) Means of lubrication are to be submitted for special consideration by the Society.

(c) Water lubricated bearings of lignum vitae

(i) Where the bearing comprises staves of wood (known as lignum vitae), the length of the bearing is to be not less than 4.0 times the rule diameter of the shaft in way of the bearing.

(ii) Adequate means are to be provided to supply ample amount of clean water for lubrication and cooling. Forced water lubrication by a suitable independent pump or from other pressure source is recommended to be provided when the required shaft diameter exceeds 350 mm.

(d) Water lubricated bearings of synthetic material

(i) Where the bearing is constructed of synthetic materials which are approved for use as water lubricated stern bush bearings such as rubber or plastics the length of the bearing is to be not less than 4.0 times the rule diameter of the shaft in way of the bearing.

(ii) For a bearing design substantiated by experiments to the satisfaction of the Society consideration may be given to a bearing length not less than 2.0 times the rule diameter of the shaft in way of the bearing.

(iii) Means of lubrication are to be submitted for special consideration by the Society.

A reduction of the bearing length may be approved if the bearing is shown by means of bench tests to have sufficient load bearing capacity.

6.6.5 The notations used in 6.6.1 and 6.6.3 above are defined as follows:

d_4 = Diameter required for coupling bolt, in mm.

d_1 = Diameter of intermediate shaft calculated with

K_1 = 1 in 6.2, in mm.

S_s = Specified tensile strength of intermediate shaft material taken for the calculation in 6.2 N/mm^2.

S_b = Specified tensile strength of bolt material N/mm^2, while in general $S_s \leq S_b \leq 1.7S_s$, and the upper limit of the value of S_b used for the calculation is to be 1,000 N/mm^2.

Z = Number of bolts in one coupling.

D = Pitch circle diameter of the coupling bolt holes, in mm.

t_1 = Thickness required for shaft liner in way of stern bearing or gland, in mm.

t_2 = Thickness required for shaft liner outside portion of stern bearing and gland, in mm.

d_3 = as defined in 6.4.4 of this Part.

6.7 Protection for Propeller Shaft against Corrosion

6.7.1 The propeller shaft made of material which is not resistible to sea water is to be properly protected.

6.7.2 The exposed steel of the propeller shaft is to be protected from the action of sea water by filling all spaces between propeller cap, hub and shaft with a suitable material.

6.7.3 Effective means are to be provided to prevent sea water from having access to the part between the aft end of propeller shaft sleeve or the aft end of the aftermost stern tube bearing and the propeller boss.

6.8 Torsional Vibration

6.8.1 General

(a) The following requirements are applicable to the torsional vibration of main propulsion shafting system and auxiliary diesel engines for essential service.

(b) The torsional vibration of novel designed engine or some parts of the installation such as gear, chain, cam mechanism or elastic coupling etc. is to be submitted for special approval.

6.8.2 Torsional vibration calculations

(a) The torsional vibration calculations to be submitted for approval are to include the following:

(i) The basic data for establishing such calculation and more particularly the dynamic characteristics of the equivalent system of the whole installation, i.e. machinery, shafting and propeller etc.

(ii) The table of natural frequencies for 1-, 2- and possibly more than 2-node modes of vibration.

(iii) The vector summations for critical speeds of all significant orders up to 115% of rated speed.

(iv) The arrangement of crank and particulars of firing order of the engine.

(v) The stress estimates for critical speeds whose severity approaches or exceeds the allowable limit specified.

(b) The similar calculation is to be made for the spare propeller, if different from the working propeller.

(c) The various working ranges of the propelling machinery when running continuously are to be specified. In particular, for the trawler, the trawling speed is to be stated. The idling speed of the machinery is also to be mentioned.

(d) For the installation including torsional vibration damper, the characteristics of this damper and the data permissible to check its efficiency is to be submitted together with the torsional vibration calculations for approval.

(e) When the additional stress determined by the above calculations indicates significantly higher, the stress value is to be presumed and investigated by service experience of the similar previous installation.

6.8.3 Torsiograph test

(a) The torsiograph test is required to verify the above calculations and to assist in determining the barred range of continuous running in the case of the new construction or conversion where the torsional critical speed arrangement differs significantly from the previous installation.

(b) The torsiograph test is to be carried out in the presence of the Surveyor.

(c) In the following cases, the omission of torsiograph test may be considered:

(i) The main propelling machinery having no vibration damper together with shafting and propeller is similar to the installation for which torsiograph record has previously been taken in the presence of the Surveyor and verified that the noteworthy torsional critical speeds do not exist between the interval from 80% to 105% of the rated speed.

(ii) For installations having some parts of the shafting and propeller slightly different from the one for which torsiograph record has previously been taken and proved to be satisfactory the additional stress due to torsional vibration can easily be presumed and verified that the noteworthy torsional critical speeds do not exist between 80% to 105% of the rated speed.

6.8.4 Allowable stress

(a) For continuous operation the permissible stresses due to alternating torsional vibrations are not to exceed the values given by the following formulae:

for $\lambda < 0.9$

$$\tau_1 = \pm \frac{\sigma_B + 160}{18} \cdot c_K \cdot c_D \cdot (3 - 2\lambda^2)$$

for $0.9 \leq \lambda < 1.05$

$$\tau_1 = \pm \frac{\sigma_B + 160}{18} \cdot c_K \cdot c_D \cdot 1.38$$

where:

τ_1 = Permissible stress due to torsional vibrations for continuous operation, in N/mm^2;

σ_B = Tensile strength of the shaft material, in N/mm^2;

c_K = Factor for different shaft design features, see Table IV 6-3;

Table IV 6-3
c_K– Factors

for intermediate shafts with	integral coupling flanges	1.0
	shrink fit couplings	1.0
	keyways	0.6
for thrust shafts external to engines	on both sides of thrust collar	0.85
	in way of axial bearing where a roller bearing is used as a thrust bearing	0.85
for propeller and crankshafts	for K_2 = 122 and 126 see Table IV 6-2	0.55

c_D = Size factor;

= $0.35 + 0.93\ d^{-0.2}$

d = Shaft diameter, in mm;

λ = Speed ratio;

= n/n_1

n = Speed in question, in min^{-1};

n_1 = Rated speed, in min^{-1}.

(b) For transient running the permissible stresses due to the alternating torsional vibrations are not, in any case, to exceed the values given by the following formula:

$$\tau_2 = \frac{1.7\tau_1}{\sqrt{c_k}} \quad \text{for} \quad \lambda \leq 0.8$$

where:

τ_2 = Permissible stress due to torsional vibrations for transient running, in N/mm^2.

(c) In general, the tensile strength of the steel used is to be between 400 and 800 N/mm. For the calculation of the permissible limits of stresses due to torsional vibrations, σ_B is not to be taken as more than 600 N/mm.

(d) The allowable limit of additional stresses in generator engine crankshafts, where the critical occurs between 0.95 to 1.05 times the rated speed, the additional stresses are not to exceed the values obtained from the following:

τ_1= 31 N/mm^2

(e) The values given in the above formulae are to be applied for the shafting and crankshaft of ordinary design without having excessive stress concentration, otherwise special consideration is to be made. Stresses are nominal values based on diameter of crank-pins, or on the minimum propeller shaft diameter between the big end of the taper and the forward stern gland.

(f) Where shafting is made of materials other than steel, the limit of additional stress will be fixed by the Society after examination of the result of the fatigue test carried out on the said materials.

(g) For propeller shafts of non-corrosion resistant material which are exposed to sea water, the allowable stress limit is to be of 70% of the value specified in the formulae in (a).

6.8.5 Barred range

(a) When the result of calculation or torsiograph record shows the critical speed for which the additional stress due to torsional vibration exceeds the value specified in (a) and (b) of 6.8.4, the corresponding speed range is to be barred out for continuous running. This barred range is to be crossed out in red on the tachometer and a warning notice is to be fitted near the engine control stand.

(b) The torsional critical speed resulting from additional stress exceeds the allowable limit under intermittent operating condition is not to be crossed over even in intermittent running except if proof is given that the maximum value of such stress cannot be reached during operation in which the engine speed rapidly passes through the critical range.

(c) The details of barred range together with mode of vibration, critical speed, maximum additional stress and the part of shafting where this maximum additional stress occurs are to be registered in the Machinery Classification Survey Report.

(d) When the propeller is driven through reduction gears, or when the auxiliary equipment such as a blower is driven through gears, a barred range is to be provided at the critical speed if the gear tooth chatter occurs during continuous operation at the critical range.

(e) The width of barred range is to take into consideration the breadth and severity of the critical, but to be extended at least as follows:

(i) For 1-node vibration

$$\frac{16 \cdot \eta_c}{18 - \lambda} \leq Z \leq \frac{(18 - \lambda) \cdot \eta_c}{16}$$

(ii) For 2-node vibration

$$\frac{1}{1.05}\eta_c \leq Z \leq 1.05\eta_c$$

where:

Z = Barred range, in min^{-1}.

η_c = Critical speed, in min^{-1}.

(f) When the additional stress due to torsional vibration exceeds the allowable limit specified in 6.8.4 and a barred range is not acceptable, the dynamic system is to be redesigned, or dampering or detuning arrangements provided to remove the critical speed from the operating range or to reduce the magnitude of the vibration stress. Where vibration dampers or flexible couplings are fitted, it may be required that torsiograph tests be carried out to verify their efficient.

6.9 Axial Vibrations

6.9.1 The designer or the builder is to evaluate all main propulsion systems to ensure that the amplitudes of axial vibration are of acceptable magnitude throughout the engine operating speed range, with consideration also given to the possibility of the coupling of torsional and axial vibration, unless experience with similar propulsion system installations makes it unnecessary. The axial vibrations may be controlled by axial vibration detuners to change the natural frequency of the system or by axial vibration dampers to limit the amplitude of axial vibrations to an acceptable level. When on basis of axial vibration calculations it is proposed by the designer or builder to provide barred speed ranges within the engine operating speed range, the calculations are to be submitted for information. The barred speed ranges due to axial vibrations are to be verified and established by measurement.

6.9.2 Calculations of axial vibration natural frequency are to be carried out using appropriate techniques, taking into account the effects of flexibility of the thrust bearing, for shaft systems where the propeller is:

(a) driven directly by a reciprocating internal combustion engine;

(b) driven via gears, or directly by an electric motor, and where the total length of shaft between propeller and thrust bearing is in excess of 60 times the intermediate shaft diameter.

6.9.3 Where an axial vibration damper is fitted, the calculations are to consider the effect of a malfunction of the damper.

6.10 Lateral (Whirling) Vibrations

The designer or the builder is to evaluate all main propulsion shafting systems to ensure that the amplitudes of lateral (whirling) vibration are of acceptable magnitude throughout the engine operating speed range, unless experience with similar propulsion system installations makes it unnecessary. When on basis of lateral vibration calculations it is proposed by the designer or builder to provide barred speed ranges within the engine operating speed range, the calculations are to be submitted for information. The barred speed ranges due to lateral vibration are to be verified and established by measurement. Calculations of the lateral vibration characteristics of shafting systems having supports outboard of the hull or incorporating cardan shafts are to be submitted. The calculations of lateral vibration, taking account of bearing, oil-film (where applicable) and structural dynamic stiffnesses, are to investigate the excitation frequencies which may result in significant amplitudes within the speed range, and are to indicate relative deflections and bending moments throughout the shafting system.

6.11 Propulsion Shaft Alignment

6.11.1 General

Propulsion shafting is to be aligned with the location and spacing of the shaft bearings being such as to give acceptable bearing reactions and shaft bending moments for all conditions of ship loading and operation. The designer or the builder is to evaluate the propulsion shafting system taking into consideration any forces or factors which may affect the reliability of the propulsion shafting system including weight of the propeller and shafts, hydrodynamic forces acting on the propeller, number of propeller blades in relation to diesel engine cylinders, misalignment forces, thermal expansion, flexibility of engine and thrust bearing foundations, engine induced vibrations, gear tooth loadings, flexible couplings, effect of power take-off arrangements from the propulsion shafting system driving auxiliaries, etc., as applicable, as well as any limits for vibration and loadings specified by the equipment manufacturers.

6.11.2 Shafting alignment calculations are to be submitted for approval for the following shafting systems where the tailshaft has a diameter of 250 mm or greater in way of the aftermost sterntube bearing.

(a) The all geared installations.

(b) The installations with one shaftline bearing, or less, inboard of the forward sterntube bearing.

(c) The prime movers or shaftline bearings are installed on resilient mountings.

6.11.3 The shafting alignment calculations are to take into account:

(a) the thermal displacements of the bearings between cold static and hot dynamic machinery conditions;

(b) the buoyancy effect of the propeller immersion due to the ship's operating draughts;

(c) the effect of predicted hull deformations over the range of the ship's operating draughts, where known;

(d) the gear forces, where appropriate;

(e) possible contributions in the mode of operation in cases of multi-engined installations;

(f) the propeller offset thrust effects, where applicable;

(g) the bearing loading in the horizontal plane, where appropriate; and

(h) the bearing weardown, where applicable, and its effect on the bearing loads.

6.11.4 The shafting alignment calculations are to state:

(a) the expected bearing loads at light and normal ballast, fully load and any other draughts deemed to be part of the ship's operating profile, in cold and hot, static and dynamic conditions for the machinery;

(b) the bearing influence coefficients and the deflection, slope, bending moment and shear force along the shaftline;

(c) the details of propeller offset thrust effects, where employed in calculation;

(d) the details of proposed slope-bore of the aftermost sterntube bearing, where applicable;

(e) the manufacturer's specified limits for bending moment and shear force at the shaft couplings of the gearbox and prime movers;

(f) the estimated bearing weardown rates for water or grease-lubricated sterntube bearings;

(g) the origin of findings where the effect of hull deformation has been considered by finite element calculations or measured results from sister or similar ships have been used;

(h) the anticipated thermal rise of prime movers and gearing units between cold static and hot running conditions; and

(i) the manufacturer's allowable bearing loads.

6.11.5 A shafting alignment procedure is to be submitted for all main propulsion installations and includes:

(a) the expected bearing loads at light and normal ballast, fully load and any other draughts deemed to be part of the ship's operating profile, in cold and hot, static and dynamic conditions for the machinery;

(b) the maximum permissible loads for the proposed bearing designs;

(c) the design bearing offsets from the straight line;

(d) the design gaps and sags;

(e) the location and loads for the temporary shaft supports;

(f) the expected relative slope of the shaft and the bearing in the aftermost sterntube bearing;

(g) the details of slope-bore of the aftermost sterntube bearing, where applied;

(h) the expected shear forces and bending moments at the forward end flange of the shafting system connecting to the gear output shaft or for direct-drive installations, to the prime mover output flange;

(i) the proposed bearing load measurement technique and its estimated accuracy;

(j) the jack correction factors for each bearing where the bearing load is measured using a specified jacking technique;

(k) the proposed shaft alignment acceptance criteria, including the tolerances; and

(l) the flexible coupling alignment criteria.

6.11.6 Shaft Alignment Calculations

For all main propulsion shafting systems, the designer or the builder is to assure acceptable bearing reactions and shaft bending moments for all conditions of ship loading and operation by means of shaft alignment calculations which are to be submitted for review or, by confirmation that experience with similar propulsion system installations makes it

unnecessary to perform the calculations. For propulsion shafting arrangements employing reduction gears where the main reduction gear is driven by multiple (two or more) ahead pinions, for propulsion shafting systems with power take-off arrangements for driving auxiliaries at sea, or for those propulsion shafting arrangements for which the tailshaft bearing(s) are to be bored sloped, the shaft alignment calculations are to be prepared and submitted for review in each case. The alignment calculations are to be performed for cold start and hot running conditions and are to include bearing reactions, the effect of linear movements on the bearing reactions and the bending moments along the shafting.

6.12 Measurements

When alignment and vibration calculations are required to be submitted in accordance with 6.8, 6.9, 6.10 and 6.11 the alignment calculations and any proposed barred speed ranges within the engine operating range are to be verified and recorded by appropriate measurement procedures in the presence and to the satisfaction of the Surveyor during trials.

6.13 Tests and Inspections

6.13.1 Tightness tests

(a) Before being fitted, the propeller shaft liner, preferably in the finished state, is to be hydraulically tested for tightness to a pressure of 0.2 N/mm^2 in the presence of the Surveyor.

(b) Before being fitted, the cast stern tube, preferably in the completed state, is to be hydraulically tested for tightness to a pressure of 0.2 N/mm^2 in the presence of the Surveyor. Stern tubes made from other than casting are to be subjected to the tightness test on the hull spaces through which the stern tube passes.

(c) For oil sealing glands as stated in 6.6.4(b)(iii) of this Part, the leak test by oil pressure is to be made in the presence of the Surveyor after being installed on-board.

6.13.2 The following inspections for main shafting and accessories are to be carried out in the presence of the Surveyor complying with the relevant requirements of this Chapter:

(a) Material test, before shrinkage and final inspection for shafts and shafting accessories.

(b) Contacting test of the propeller hub to the cone of the propeller shaft prior to final pull-up.

(c) Assembling of propeller to the shaft on-board.

(d) Alignment of shafting on-board.

(e) Checking of fitness for coupling bolts.

(f) Measurement of vibrations on board.

6.14 Shafting Scantling for Ships Less than 500 GT

6.14.1 General

(a) The requirements in this section are applicable to the ships which are:
  (i) fitted with direct propulsion system or V direction propulsion system; and
  (ii) with a gross tonnage less than 500 and not engaged in international voyage.

(b) The propeller shaft made of material which is not resistible to sea water is to be properly protected.

6.14.2 Shafting scantling

(a) Propeller shaft diameter
The diameter of the propeller shaft is not to be less than that obtained from the following formula:

$$d_4 = K_3 \sqrt[3]{\frac{H}{N}}$$

where:

d_4 = Diameter required for propeller shaft, in mm.
H = Brake power, in kW.
N = Shaft revolutions per minute.
K_3 = Constant as given in Table IV 6-4 as below.

Furthermore, the shaft diameter is not to be less than 25 mm for carbon steel or carbon manganese steel, and 20 mm for the other materials listed in Table IV 6-4 as below.

The use of materials other than those included in Table IV 6-4 as below is to be subject to special examination.

(b) Intermediate shaft diameter

Where the intermediate shaft is constructed of the same material as the propeller shaft and of a material listed in Table IV 6-4 as below, the diameter of the intermediate shaft is not required to be greater than that of the propeller shaft.

Table IV 6-4
Constant K_3 for Propeller Shafts

Material	Minimum yield stress, in N/mm^2	Minimum ultimate tensile strength, in N/mm^2	K_3
Carbon and carbon manganese steel	200	400	126
Austenitic stainless steel (type 316)	175	470	91
Manganese bronze	245	510	103
Martensitic stainless steel (type 431)	675	850	88
Ni-Al bronze	390	740	85
Nickel-copper alloy (Monel 400)	350	550	85
Nickel-copper alloy (Monel K 500)	690	960	71
Duplex stainless steel (type S31803)	450	650	63

Chapter 7

Propellers

7.1 General

7.1.1 The requirements of this Chapter are applicable to the screw-propellers. Where a design is proposed to which the following cannot be applied, special strength calculations are to be submitted for consideration.

7.1.2 Drawings and data

(a) The drawings of the propeller including spare one, if supplied, are to be submitted for approval. These drawings are to contain all the details necessary for examination in accordance with the Rules for design and materials as follows:

Type of the propelling machinery and power transmitted to the propeller, propeller speed consistent with the above mentioned power, maximum thrust, geometrical data of the propeller including number of blades, diameter, pitch, thickness and width at the various radii and rake, etc., material specifications and strength calculations.

(b) For the built-up propeller, the drawings submitted are to include, in addition, the number, position, diameter and threading characteristics of the studs as well as their material used. The securing arrangements of the studs are also to be given.

(c) For ships such as trawlers or tugs, for which several working ranges are provided, the above mentioned characteristics are to be indicated for these various ranges.

(d) In addition to the drawings and data required in 7.1.2(a) above, the following are to be submitted for controllable pitch propeller:

A diagram showing the variation of the maximum thrust of the propeller and of the corresponding pitch for the maximum power and number of revolutions of the main shafting, as a function of the ship's speed from zero to the maximum. The detail drawings of the pitch selection mechanism of the blades and corresponding control gear. The hydraulic piping control system, instrumentation and alarm system, and the strength calculations for internal mechanism.

7.1.3 Materials

(a) The propellers are to be of accepted cast alloys of copper or steel which are non-corrodible in sea water. Cast iron which has a tensile strength of not less than 245 N/mm^2 is to be employed only for the spare propeller intended for temporary use. For ships to be granted the notation **Ice Class**, the requirements of Chapter 10 or Chapter 10A, Part III are also to be applied.

(b) Where propeller materials are proposed for which details of service experience is not available, their suitability are to be especially demonstrated to the Society.

(c) The materials for the propellers, the blade attaching studs, and the components and pitch selection mechanism for controllable pitch propellers are to be tested and inspected in the presence of the Surveyor to comply with the requirements of Part XI or to the requirements of the specifications approved in connection with the design.

7.2 Strength Calculations

7.2.1 Blades

(a) For propeller blade of conventional design ($\theta \leq 25°$), the required blade thickness is to comply with the following formula:

Note: The maximum skew angle of a propeller blade (θ) is defined as the angle, in projected view of the blade, between a line drawn through the blade tip and the shaft centreline and a second line through the shaft centreline which acts as a tangent to the locus of the mid-points of the helical blade sections, see Fig. IV 7-1.

$$t = C_1 K_m \sqrt{k_1 k_2 \frac{H \times 10^6}{NBZS}}$$

where:

t	=	Required propeller blade thickness in mm at the thickest part of the blade section considered. For solid propeller, thickness at 0.25R and 0.6R are to be calculated, for detachable propeller thickness at 0.35R and 0.6R are to be calculated, the calculated thickness is not including the rounded fillet.
C_1	=	$1 + \frac{E}{D} + \frac{N}{10000}$
E	=	Blade rake of aft, measured as the distance between the tip of the blade and a perpendicular where the line of the blade face intersects with the axis of the propeller, in mm.
D	=	Propeller diameter, in mm.
N	=	Revolutions of the propeller, in rpm.
K_m	=	Material constant.
	=	16.92 for copper alloy.
	=	18.54 for cast steel.
	=	21.40 for cast iron.
k_1	=	$1 + 4\left(\frac{E}{D}\right)^2$, rake factor
k_2	=	Pitch factor
	=	$2.78\frac{D}{P} + 1.72$ for 0.25R section
	=	$2.42\frac{D}{P} + 1.51$ for 0.35R section
	=	$0.82\frac{D}{P} + 0.51$ for 0.6R section
P	=	Propeller pitch measured on the face. For the propeller having a non-uniform pitch the mean effective pitch $\frac{\sum(RBP)}{\sum(RB)}$ is to apply. Where R, B and P are the dimensions at the radius considered, in mm.
B	=	Developed blade width measured at the blade face at radius considered, in mm.
Z	=	Number of blades:
H	=	Maximum continuous output of the engine driving the propeller, in kW.
S	=	Minimum tensile strength of propeller material, in N/mm^2.

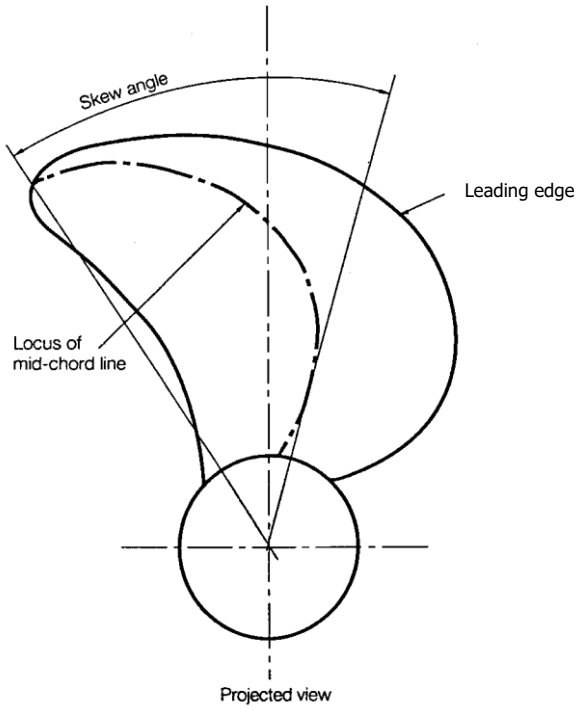

Fig. IV 7-1
Definition of Skew Angle

(b) Skewed propeller

(i) For propellers having a skew angle in excess of 25° or greater, but less than 50°, the blade thickness at the radius of 0.25R and 0.6R are not to be less than the values obtained by multiplying the value [t] calculated by the formula in 7.2.1(a) above, by the coefficients $K_{0.25}$ and $K_{0.6}$ respectively given in the formulas below:

$$K_{0.25} = 0.75(1 + 0.1\theta_S)^{0.25}$$
$$K_{0.6} = 0.54(1 + 0.1\theta_S)^{0.5}$$

Where θ_S =Proposed skew angle in degrees as defined in 7.2.1(a)

The thickness of the remaining radii are to be joined by a fair curve and the sections are to be of suitable aerofoil section.

(ii) Results of detailed calculations where carried out, are to be submitted.

(iii) For propellers having a skew angle in excess of 50°, a detailed blade stress computation is to be submitted for special approval.

(c) A reduction in the blade root thickness below that required in 7.2.1(a) above may be permitted on the blade of special form where the blade rigidity, flow characteristics, distribution of the pressure over the blade, etc., are such that a sufficient margin of safety based on the tensile strength is maintained.

(d) For controllable pitch propellers, the pitch P entered in the formula of 7.2.1(a) above for calculating the blade root thickness required for tugs and similar ships in the pitch corresponding to the maximum propeller thrust measured at the bollard pull test. When this pitch is not communicated to the Society, a root thickness based on a pitch ratio = 0.5 will be assumed for the calculations.

7.2.2 Blade attaching studs

(a) The thread bottom diameter of the blade attaching studs for the built-up propeller is not to be less than obtained by the following formula:

$$d = K_2\sqrt{\frac{10^6 C_2 H}{N n_f d_p Z} + \frac{WDN^2}{10^6 n_t}}$$

where:

d = Diameter of the blade attaching studs, measured to the bottom of the thread, in mm.

d_p = Pitch circle diameter of the studs or where the studs are not arranged in a circle, 85% of the greater distance L (mm) between the studs on the face side and the back of the propeller blade, in mm, see Fig. IV 7-2.

W = Mass of the blade including the flange, in kg.

n_t = Total number of studs attaching each blade.

n_f = Number of studs on the face side of the blade.

C_2 = Factor as given in the following Table

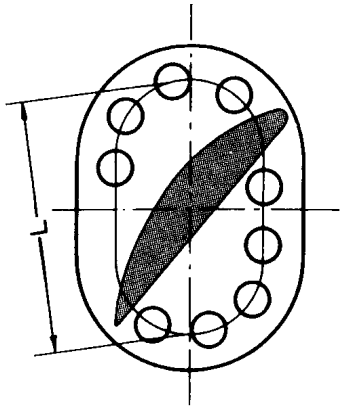

$d_p = 0.85L$

Fig. IV 7-2
Blade Attaching Studs

$\frac{P}{D}$	C_2
0.5	10.74
0.6	9.11
0.7	7.88
0.8	6.93
0.9	6.25
1.0	5.71
1.1	5.30
1.2	5.03
1.3	4.89

$$K_2 = 0.26\sqrt{\frac{590}{S}}$$

S = Minimum tensile strength of material of which the stud is designed to be made, in N/mm^2.

H, N, Z are the same as defined in 7.2.1 (a)

(b) The plain machined portion of the propeller blade attaching stud may be reduced to 90% of the stud diameter measured to the bottom of the thread.

(c) The attaching studs are to be prevented from accidentally becoming loose.

7.3 Construction

7.3.1 Fitting of propeller

(a) Where bronze propeller is force fitted on the steel propeller shaft without use of key, the minimum and maximum limits of pull-up length are to be given by the following formulae. For the taper of more than 1/15, these limits of pull-up length are to be subject to special consideration.

$$L_{min} = 206 \times 10^6 K_1 \frac{H}{NA\tan\theta} + 2.75 \times 10^{-6} \frac{d_m}{\tan\theta}(35 - t)$$

$$L_{max} = 0.35 \frac{K_1}{K_2} \cdot \frac{d_m Y}{\tan\theta} - 2.75 \times 10^{-6} \frac{d_m}{\tan\theta} \cdot t$$

where:

L_{min} = Minimum pull-up length at temperature t, in mm.

L_{max} = Maximum allowable pull-up length at temperature t, in mm.

H = Maximum continuous output of the engine driving the propeller, in kW.

N = Revolutions of propeller, in rpm.

A = 100% theoretical contact area between boss and shaft, as read from drawings and disregarding oil grooves, in mm^2.

d_m = Diameter of propeller shaft at the midpoint of the contact taper in axial direction, in mm.

D_m = Mean outer diameter of propeller boss at axial position corresponding d_m, in mm.

d_o = Diameter of hole if the propeller shaft is hollowed, in mm.

a = D_m/d_m, diameter ratio.

b = d_o/d_m, diameter ratio.

θ = Half taper of propeller shaft, e.g. taper = 1/15, tanθ = 1/30.

t = Temperature of propeller shaft and boss at time of fitting propeller, in °C.

Y = Propeller material's yield point, or 0.2% proof stress, in N/mm^2.

K_1 = $8.47 \times 10^{-6} \frac{a^2 + 1}{a^2 - 1} + 4.83 \times 10^{-6} \frac{1 + b^2}{1 - b^2} + 1.39 \times 10^{-6}$

K_2 = $\frac{\sqrt{3a^4 + 1}}{a^2 - 1}$

(b) The propeller hub is to be adequately fitted on the propeller shaft cone or securely bolted on the propeller shaft.

(c) Normally, the taper in diameter of the propeller shaft cone is not to be steeper than 1/10. The whole surface of the propeller shaft cone and the propeller hub bore are to be uniformly fitted.

(d) Suitable pulling force is to be applied for the fitting of the propeller to the shaft cone so that the contact friction developed between the surfaces is sufficient to resist the full torque of the shaft. For keyless bore propeller, the fitting of hub in accordance with the calculations specified in 7.3.1 of this Part is to be submitted for approval. A copy of the fitting curve relative, to temperature and means for determining any subsequent movement is to be placed on board.

(e) The forward taper edge of the propeller hub is to be rounded.

(f) Where the propeller hub is bolted to the shaft, the appropriate design and calculations are to be submitted to demonstrate that their attaching bolts and pins are in sufficient strength and suitable coupled.

(g) The propeller hub is not to be fitted or removed by means of local heating.

(h) Prior to final pull-up, the contact area between the mating surfaces is to be checked and is not to be less than 70% of the theoretical contact area. Non-contact bands extending circumferentially around the boss or over the full length of the boss are not acceptable.

(i) After final pull-up, the propeller is to be secured by a nut on the propeller shaft. The nut is to be secured to the shaft.

(j) The external diameter of the thread for propeller retaining nut is not to be less than 60% of the required diameter of the propeller shaft.

7.3.2 Controllable pitch propeller

(a) The controllable pitch propeller is to be arranged so that the blades can be reliably held in any pitch position.

(b) The hydraulically operated pitch selection mechanisms are to be provided with 2 independent, mechanically driven pump units. The propulsion installations up to 150 kW need only be fitted with one mechanically driven pump unit, provided an additional hand operated pump is available by means of which the blades can be moved from the ahead to the astern positions in a sufficiently short period of time.

(c) The controllable pitch propeller system is to be provided with an indicator in the engine room showing the actual position of the blades. Where the controllable pitch propeller system is controlled from the bridge, a similar indicator is also to be provided therein and the system is to be capable of being operated from the engine room in emergency.

(d) Visual and audible alarms are to be provided in the engine room control station to indicate the low hydraulic oil pressure, high hydraulic oil pressure and high hydraulic oil temperature.

7.4 Tests and Inspections

7.4.1 The finished propeller is subject to the Surveyor's final examination, checking of the dimensions and static balancing at the manufacturer's workshop.

7.4.2 The contact test of the propeller hub to the cone of the propeller shaft prior to final pull-up and their assembling on-board are subject to the Surveyor's examination.

7.4.3 The controllable pitch propeller system is subject to pressure, tightness and operational tests at the manufacturer's workshop in the presence of the Surveyor.

7.4.4 Final fitting of keyless propellers

(a) After verifying that the propeller and shaft are at the same temperature and the mating surfaces are clean and free from oil or grease, the propeller is to be fitted on the shaft under survey. The propeller nut is to be securely locked to the shaft.

(b) The permanent reference marks are to be made on the propeller boss nut and shaft to indicate angular and axial positioning of the propeller. Care is to be taken in marking the inboard end of the shaft taper to minimize stress raising effects.

(c) The outside of the propeller boss is to stamp with the following details:

(i) For oil injection method of fitting, the start point load, in N, and the axial pull-up at 0°C and 35°C, in mm.

(ii) For dry fitting method, the push-up load at 0°C and 35°C, in N.

(d) A copy of the fitting curve relative to temperature and means for determining any subsequent movement of the propeller are to be placed on board.

7.4.5 Final fitting of keyed propellers

The fit of the screwshaft cone to both the working and any spare propeller is to be carried out under survey.

The satisfactory fit for keyed type propellers should show a light, overall marking of the cone surface with a tendency towards heavier marking in way of the larger diameter of the cone face. The final fit to cone should be made with the key in place.

Chapter 8

Guide for Spare Parts

8.1 General

8.1.1 It is recommended that adequate spare parts together with the tools necessary for maintenance, or repair, are to be carried on-board. The spare parts are to be determined by the Owner according to the design and intended service. The maintenance of the spare parts is responsibility of the owner. The spare parts listed in Table IV 8-1 to 8-4 are provided as a guide to assist the Owner in ordering spare parts.

8.1.2 Where several machinery of the same size and type are installed, or where the machinery spare parts are interchangeable, the spare parts required need only be supplied for one machinery.

8.1.3 Where the number of auxiliary machinery which may provide a given essential service is in excess of that required by the Rules, no spare parts will be required for such machinery.

Table IV 8-1
Guide for Spare Parts of Steam Turbines

Parts of engine	Description	Main Turbine		Auxiliary Turbine	
		Ship with Unrestricted Service	Ship with Restricted Service	Ship with Unrestricted Service	Ship with Restricted Service
Journal bearing	Bearing of each size for rotor, complete with bolts and nuts, or roller bearing of each size when used.	1	—	1	—
Turbine thrust	Pads for one face of each type of thrust with liners for one turbine.	100%	100%	100%	100%
Turbine shaft sealing ring	Sealing ring with spring, of each size and type of gland used, for one turbine.	50%	—	50%	—

Note: For the reduction gear and the quill shaft, see Table IV 8-4.

Table IV 8-2
Guide for Spare Parts of Diesel Engines

Parts of Engines			Main Engine		Auxiliary Engine	
		Ship service→	unrestricted	restricted	unrestricted	restricted
Cylinder cover, fittings and valves		Cylinder cover, complete with valves, joint rings and gaskets. For engines without covers, the respective valves for one cylinder unit.	1	—	—	—
		Cylinder cover studs or bolts with nuts as applicable for one cylinder.	50%	—	—	—
		Exhaust valves, complete with casings, seats, springs and other fittings for one cylinder.	200%	100%	200%	—
		Air inlet valves, complete with casings, seats, springs and other fittings for one cylinder.	100%	100%	100%	—
		Starting air valves, complete with casings, seats, springs and other fittings for one cylinder.	1	1	1	—
		Cylinder relief valve complete.	1	1	1	—
		Fuel injection valves of each size and type used, complete with all fittings for one engine.	100%(1)	25%	50%	—
Piston and fittings	Crosshead type	Piston of each type used, complete with piston rod, stuffing box, skirt, rings, studs and nuts.	1	—	—	—
	Trunk piston type	Piston of each type used, complete with skirt, rings, studs, nuts, gudgeon pin and connecting rod.	1	—	—	—
	Piston rings	Piston rings for one cylinder.	100%	—	100%	—
	Piston cooling	Telescopic cooling pipes with fittings or equivalent for one cylinder.	100%	—	100%	—
	Cylinder liner	Cylinder liner, complete with joint rings and gaskets.	1	—	—	—
	Connecting rod	Bottom end bearings or shells of each size and type used, complete set with shims, bolts and nuts for one cylinder.	1	—	1	—
	Bearings	Top end bearings or shells of each size and type used, complete set with shims, bolts and nuts for one cylinder.	1	—	1	—
	Main bearings	Main bearings or shells for one bearing of each size and type used, complete with shims, bolts and nuts	1	—	1	—
Fuel System	Pump	Complete, fuel injection pump, or when replacement at sea is practicable, a complete set of working parts for one pump including plunger, sleeve, valves, springs, etc.	1	—	1	—
	Pipe	High pressure fuel injection pipe of each size and shape used, complete with couplings.	1	—	1	—
Scavenging and supercharging systems	Blower and turbo charger	Rotors, rotor shafts, bearings, nozzle rings and synchronizing gear wheels or equivalent working parts if of other types, complete set, see Note 2.	1	—	—	—
	Reciprocating pump	Suction and delivery valves for one pump of each type used.	100%	—	—	—
Camshaft drives	Gear drive	Complete gear wheels for the camshaft drive of one engine.	—	—	—	—
	Chain drive	Separate links with pins and rollers of each size and type used.	6	—	—	—
	Bearing	Bearing bushes of each type used, complete set.	1	—	—	—
Others(3)	Lubricator	Cylinder lubricator, of the largest size, complete with its chain drive or gear wheels.	1	—	—	—
	Gaskets and packings	Special gaskets and packings of each type and size used, for cylinder covers and cylinder liners for one cylinder.	100%	—	100%	—

Notes:

(1) In the engine where each cylinder has 3 or more fuel valves, complete 2 fuel valves per cylinder and a sufficient number of valve parts, excluding the body, are to be provided for a full engine set.

(2) The spare parts may be omitted where it has been demonstrated at the engine manufacturer's shop, for an engine of the type concerned, that the engine can be maneuvered satisfactorily with one blower or tubro-chargers out of action, and that the requisite blanking and/or blocking arrangements, applicable for running with one blower or turbo-charger out of action, are to be available on board.

(3) For main engine driven air compressor, see Table IV 8-3. For reduction and/or reverse gear, see Table IV 8-4.

Table IV 8-3
Guide for Spare Parts of Air Compressors and Pumps

Parts of Machinery		Description	Ship with Unrestricted Service	Ship with Restricted Service
Air compressor	Piston rings	Piston rings, of each size used, for one cylinder.	100%	100%
	Valves	Suction and delivery valves of each size used, complete with springs and other fittings for one compressor.	50%	50%
Essential service pump	Centrifugal type	Shaft assembly, complete with impeller, bearings and packings, See Note.	1	—
	Reciprocating type	Suction and delivery valves, of each size and type used, complete with springs and other fittings, for one pump	100%	100%
	Gear and screw type	Parts subject to wear or one complete pump, See Note.	1	1

Note: Where a standby pump of sufficient capacity is provided, these spare parts need not to be supplied.

Table IV 8-4
Guide for Spare Parts of Shafting, Gearing and Couplings

Parts		Description	Ship with Unrestricted Service	Ship with Restricted Service
Shafting	Main shafting	Coupling bolts with nuts, of each size used, for one coupling.	100%	—
	Quill shaft	Coupling bolts with nuts, of each type used, for one coupling of main propulsion use.	100%	—
Main thrust block	Solid ring type	Thrust pads, of full set, for one face.	1	1
		Complete white-metal thrust shoe for one face.	1	1
	Roller type	Roller bearing, complete with race and rollers of each size and type used.	1	1
Reduction and reverse gear		Complete journal bearing of each size used, in the gear case assembly.	1	—
		Roller or ball race, of each size used in the gear case assembly	1	—
Flexible coupling		Springs, of each size used, for one coupling.	1	—

Chapter 9

Special Requirements for Machinery Installed in Ships with Restricted Area of Service and Small Ships

9.1 General

9.1.1 Scope

The requirements in this Chapter apply to machinery to be installed in ships less than 500 gross tonnage or intended for registry with restricted areas of service or are not engaged in international voyage in place of the relevant requirements in Part II, IV, V, VI and VII.

9.2 Modified Requirements

9.2.1 Provisions of spare one may be omitted

For the following machinery, provisions of spare one may be omitted provided that the total capacity of machinery is sufficient enough to obtain the maximum continuous output of the main propulsion machinery or the maximum evaporative capacity of the main and essential auxiliary boiler, and two sets of machinery in nearly the same capacity and whose capacity of either one set is sufficient enough to obtain navigable speed of the ships, are installed on board ship.

(a) The stand by source of pressure to drive the clutch of power transmission systems for main propulsion specified in 5.2.3(b) of this Part.

(b) The stand by pumps for hydraulic pumps for pitch control gears of controllable pitch propellers specified in 7.3.2(b) of this Part.

(c) Stand by fuel oil supply pump and one complete spare fuel oil supply pump specified in 4.4.3(a) of Part VI.

(d) Burning system for boiler specified in 4.4.2(a)(i) of Part VI.

(e) Stand by lubricating oil pump and one complete spare lubricating oil pump specified in 4.5.1(a) of Part VI.

(f) Stand by cooling water (oil) pump and one complete spare cooling water (oil) pump for main propulsion machinery specified in 4.3.2 Part VI.

(g) Feed water systems specified in 4.1.3(a) of Part VI.

(h) Provision of an audible and visual alarm for the steering gears specified in 4.2.8(b) of this Part.

9.2.2 Specified requirements in Table IV 9-1 are not necessary to apply.

9.2.3 Bilge suction arrangement in machinery spaces

(a) At least 2 bilge suctions are to be provided for draining the propulsion engine room. At least 1 of these suctions is to be connected directly to a bilge pump.The suctions are to be located at the lowest points of the compartment.

Additional suctions may be required if the flow of water towards the suctions is disturbed by irregularities of the bottom. At least 1 bilge suction is to be provided in watertight compartments other than the propulsion engine room.

(b) For cargo ships of less than 500 gross tonnage or passenger ships of less than 100 gross tonnage not engaged on international voyage, emergency bilge suction as required in 3.7.4 of Part VI may be dispensed with.

9.2.4 Bilge pumps and ejectors

(a) Pumps

(i) at least 2 power bilge pumps are to be provided; 1 of these pumps may be driven by a main propulsive engine.

(ii) for passenger ships not engaged on international voyages of less than 100 gross tonnage, carrying not more than 100 passengers, 2 independent bilge pumps may be provided if navigation period is less than 4 hours;

(iii) for cargo ships of less than 100 gross tonnage, one of power driven type and one hand pump may be provided.

(iv) the Society may permit, after special consideration, that 1 of the pumps be replaced by an ejector.

(v) for ships of 12 m in length and over, the bilge pumps are to be connected to the bilge main mentioned in 9.2.5(a) of this Part, unless the alternative arrangement in 9.2.6 is complied with

(vi) for ships of less than 24 m in length, the Society may permit, after special consideration, that 1 of bilge pumps be a fixed hand pump

(vii) small compartments may be drained by means of portable or fixed hand pumps.

(b) Ejectors

Where an ejector is used in lieu of a driven pump, its suction capacity is not to be less than the required capacity of the pump it replaces.

(c) Capacity of the pumps

The capacity of the bilge pumps is to be such that a speed of water not less than 1.22 m/s may be obtained in the bilge main the diameter of which is given in 9.2.5(a) of this Part. The capacity of each pump is therefore not to be less than:

$Q = 0.00345\ d_1^2$

where:

Q = Minimum capacity of each pump, in m^3/h

d_1 = Internal diameter, in mm, of the bilge main as defined in 9.2.5(a) of this Part.

(d) Use of other pumps for bilge duties

(i) other pumps may be used for bilge duties, such as fire, general service or ballast pumps, provided that:

(1) they meet the capacity requirements

(2) suitable piping arrangements are made

(3) pumps are available for bilge duty when necessary.

(e) For ships of 25 m or less in length, the internal diameter of branch bilge pipes as required in 3.11.1(d) of Part VI may be reduced to 40 mm.

(f) For ships of less than 500 gross tonnage, the capacity of bilge wells for cargo holds as specified in 3.6.2(c) of Part VI may be suitably reduced but not to be less than 0.1 m^3.

9.2.5 Size of bilge pipes

(a) Bilge main

The internal diameter, in mm, of the bilge main, is to be of the commercial size nearest to the diameter given in the following formula, in mm:

$$d_1 = 1.68\sqrt{L_{LL}(B + D)} + 25$$

where:

L_{LL} = Loadline length of the ship, in m,
B = Breadth of the ship, in m,
D = Moulded depth of the ship, in m,

In addition, d_1 is not to be less than 35 mm.

(b) Suctions in holds and machinery spaces

The internal diameter, in mm, of bilge pipes situated between collecting boxes and suctions in holds and machinery spaces, is to be of the commercial size nearest to the diameter given by the following formula, in mm:

$$d_2 = 2.16\sqrt{L_1(B + D)} + 25$$

where:
B, D = Dimensions defined in 9.2.5(a) of this Part.
L_1 = Length of the compartment, in m.

In addition, d_2 is not to be less than 35 mm.

9.2.6 Alternative arrangement

(a) Principle

As an alternative to 9.2.4 and 9.2.5 of this Part ships may be fitted with individual bilge pumps situated in each compartment required to be drained. In such case 9.2.6 (b) to 9.2.6(e) of this Part are to be complied with.

(b) Total pump capacity

The total capacity of the bilge pumps is not to be less than 2.4 times the capacity of the pump defined in 9.2.4(c) of this Part.

(c) Individual pumps capacity

The capacity of each pump Q_n , in m^3/h, is not to be less than:

$$Q_t = \frac{Q_n}{(N - 1)} \text{ with a minimum of } 6\ m^3/h$$

where:
Q_t = Total capacity as defined in 9.2.6(b) this Part.
N = Number of individual pumps.

(d) Additional portable pump

At least 1 additional means of pumping is to be provided for use in each individual space which can be a portable pump.

(e) Machinery space

The machinery space is to be provided with at least 2 individual pumps or equivalent means of pumping capacity with 2 suctions.

9.2.7 Arrangement of bilge lines and their accessories

(a) Passage of pipes through certain compartments

If not contained in pipe tunnels, the part of bilge pipes passing through tanks are to be provided with non-return valves at their ends in the holds.

(b) Non-return valves

Accessories are to be provided to prevent intercommunication of compartments or lines which are to remain segregated from each other. For this purpose, non-return valves or similar devices are to be fitted, namely on the pipe connections to bilge distribution boxes or to the alternative cocks, if any.

(c) Strainers and mud boxes

Strainers and mud boxes are to be fitted on bilge lines wherever they are necessary.

(d) Draining of fore and aft peaks

Where the peaks, if any, are not used as tanks and bilge suctions are not fitted, drainage of both peaks may be effected by hand pump suction provided that the suction lift is well within the capacity of the pump and in no case exceeds 7.3 m.

(e) Draining of spaces above fore and aft peaks

(i) provision is to be made for the drainage of the chain lockers and watertight compartments above the fore peak tank, if any, by hand or power pump suctions

(ii) steering gear compartments or other small dry enclosed spaces situated in the aft peak may be drained by scuppers discharging in the machinery space if fitted with self-closing cocks situated in visible and readily accessible positions. However, in the case of rudder stock glands located below the summer load line, the draining of the steering gear compartment are to be connected to the main bilge system.

(f) Access to valves and distribution boxes

All distribution boxes and manually operated valves in connection with the bilge pumping arrangement are to be in positions which are accessible under ordinary circumstances

Table IV 9-1
Specified Requirements are Not Necessary to Apply

	Machine or Equipment concerned	Stated in Rules Part/Section
a	An engineers' alarm	Part IV, 1.6.10(c)
b	Operating and maintenance Instruction for ship machinery and equipment	Part IV, 1.6.13
c	An hydraulically pump or an air compressor for the operation of the clutch for main propelling purpose	Part IV, 5.2.3(b)
d	The hydraulically operated pitch selection mechanisms for controllable pitch propeller	Part IV, 7.3.2(b)
e	The air pipes for fuel oil service, settling and lubrication oil tanks	Part VI, 3.2.16
f	Fuel oil service tanks for propulsion and generator systems	Part VI, 4.4.3(r)(i), (ii) and (iii)
g	Cargo oil tank venting, purging and gas-freeing	Part VI, 5.9.1(b)(iii) and 5.9.1(l)
h	A low level alarm and a storage tank for hydraulic steering gear	Part IV, 4.2.11(g)(ii) and (iii)
i	Emergency electric power for steering gear	Part VII, 2.3.10
j	Two exclusive circuits for electric or electrohydraulic steering gear arrangement	Part VII, 2.3.8
k	Short circuit protection, and overload alarm for main and auxiliary motor circuit for steering gear	Part VII, 2.3.1
l	A means of communication between the navigation bridge and steering gear compartment	Part VII, 2.5.9
m	Electric control system for steering gear	Part VII, 2.3.11
n	The buffer arrangements for the steering gear other than of hydraulic type may be omitted	Part IV, 4.2.11(b)
o	Scuppers and discharges draining from the space below the free board deck and etc.	Part II, 22.1.3
p	All external high-pressure fuel delivery lines between the high pressure fuel pumps and fuel injectors. Arrangement for draining oil fuel leakage	Part IV, 3.8.1(b) & (e)
q	Requirements of starting system from dead ship condition	Part IV, 1.6.2

Chapter 10
Dynamic Positioning System

10.1 General

10.1.1 The requirements of this chapter apply to systems for dynamic positioning of ships and mobile offshore units.

10.1.2 The dynamic positioning system (hereinafter referred as "DP-system") may be assigned with different class notations depending on the degree of redundancy built into the system, as defined below. These notations are not a requirement for class and are to be assigned only at specific request.

(a) **DPS-I**, a DP-system with an independent joystick system back-up and a position reference back-up.

(b) **DPS-II**, a DP-system with redundancy in technical design and with an independent joystick system back-up.

(c) **DPS-III**, a DP-system with redundancy in technical design and with an independent joystick system back-up. Plus a back-up dynamic positioning control system in an emergency dynamic positioning control centre, designed with physical separation for components that provide redundancy.

(d) IMO MSC/Circ.1580 "Guidelines for vessels and units with dynamic positioning systems", dated 16 June 2017, has defined equipment classes with the following correlation to the Rules:

CR Class Notation	IMO Equipment Class
DPS-I	IMO equipment class 1
DPS-II	IMO equipment class 2
DPS-III	IMO equipment class 3

10.1.3 Certification

The following equipment in the DP-system shall be certified:

(a) Dynamic positioning control system

(b) Independent joystick control system with auto heading

Other equipment in the DP-system shall be certified according to relevant requirements of the Rules.

10.1.4 Documentation

The documentation submitted, shall include descriptions and particulars of the vessel and cover the requirements given in (a) to (e), as appropriate.

(a) Instrumentation and automation

For general requirements related to documentation of instrumentation and automation, including computer based control and monitoring, see Part VIII of the Rules. For the control systems, documentation shall be submitted according to Table IV 10-1.

(b) Thruster documentation

Documentation shall be submitted as required for classification purposes, and the following shall be submitted for information:

(i) thrust output and power input curves

(ii) response time for thrust changes

(iii) response time for direction changes for azimuth thrusters

(iv) anticipated thrust reductions due to interaction effects.

(c) Electric power system documentation

(i) Documentation shall be submitted as required for classification puoposes. Electrical load calculation during dynamic positioning operation shall be submitted for approval. For vessels with the notations **DPS-II** and **DPS-III**, the load calculations shall also reflect the situation after the maximum single failure.

(ii) For vessels with the notation **DPS-III**, the following shall be submitted for approval:

(1) cable routing layout drawing

(2) fire and flooding separation arrangement.

(d) DP-Control centre arrangement and layout documentation

(i) Drawings showing the physical arrangement and location of all key components in the DP-control centre shall be submitted.

(ii) For notation **DPS-III,** drawings showing the physical arrangement and location of all key components in the emergency DP-control centre shall be submitted.

(e) Failure mode and effect analysis (FMEA)

(i) For vessels with the notation **DPS-II** and **DPS-III**, documentation of consequences of single failures in accordance with rule requirements is required in the form of a failure mode and effect analysis (FMEA).

(f) Operation manuals

Operation manuals shall be kept on board. The manuals shall include information on the DP system, its installation and structure as well as operation and maintenance.

(g) Program for tests and trials

A program for tests and trials including redundancy tests shall be submitted for approval. The requirements for the program are described in 10.1.5 of this chapter.

10.1.5 Survey and test upon completion

(a) General

Upon completion, the dynamic positioning system shall be subjected to final tests. The program shall contain test procedures and acceptance criteria. When deemed necessary by the attending Surveyor, tests additional to those specified by the test program may be required.

(b) Measuring system

(i) All sensors, peripheral equipment, and reference systems shall be tested as part of the complete DP-system.

(ii) Failures of sensors shall be simulated to check the alarm system and the switching logic.

(c) Thrusters

(i) Functional tests of control and alarm systems of each thruster shall be carried out.

(ii) All signals exchanged between each thruster and the DP-system computers shall be checked.

(iii) The different modes of thruster control shall be tested. Proper operation of mode selection shall be verified.

(d) Electric power supply

The capacity of the UPS batteries shall be tested.

(e) Independent joystick thruster control system

All functions of the independent joystick system shall be tested.

(f) Complete DP-system test

(i) The complete DP-system shall be tested in all operational modes, with simulation of different failure conditions to try out switching modes, back-up systems and alarm systems.

(ii) Positioning shall be performed on all possible combinations of position reference systems (PRS), and on each PRS as a single system. Selecting and de-selecting of PRS shall also be tested.

(iii) During sea trials the offset inputs for each position reference system and relevant sensors in the dynamic position control system should be verified and demonstrated to the attending Surveyor by setting out the offsets on drawings. It should be verified that these fit with the actual placing of the equipment.

(iv) Manual override, as required by 10.3.2(b)(ii) and 10.4.1(c)(ii) of this chapter, shall be demonstrated during normal operation and failure conditions.

(v) A duration test shall be carried out for at least 8 hours with the complete automatic system in operation. All failures shall be recorded and analyzed. The time spent on DP operational tests may normally be deducted from the time required for the duration test.

(vi) For steering gears included under DP-control a test shall be carried out verifying that maximum design temperature of actuator and all other steering gear components is not exceeded when the rudder is continuously put over from border to border within the limits set by the DP-control system, until temperature is stabilized.

(g) Redundancy tests for **DPS-II** and **DPS-III**

(i) A selection of tests within each system analyzed in the FMEA shall be carried out. Specific conclusions of the FMEA for the different systems shall be verified by tests when redundancy or independence is required.

(ii) The test procedure for redundancy shall be based on the simulation of failures and shall be performed under as realistic conditions as practicable.

10.2 General Arrangement

10.2.1 General

The general requirements for DP-system design are presented in Table IV 10-2.

10.2.2 Redundancy and Failure Modes

(a) General

These requirements apply primarily to DP-systems with **DPS-II** and **DPS-III** notations. For **DPS-I** notation, the redundancy requirements are according to classification purposes, unless specific requirements are stated.

(b) Redundancy

(i) The DP-system shall be designed with redundancy. A position keeping ability shall be maintained without disruption upon any single failure. Full stop of thrusters and subsequent start-up of available thrusters is not considered an acceptable disruption.

(ii) Redundancy shall be based upon running machinery. Automatic or manual intervention arranged to improve the position keeping ability after a failure will be accepted. Automatic start of equipment may be accepted as contributing to redundancy only if their reliability and simplicity of operation is satisfactory so that they can be brought into operation before position and heading keeping performance is degraded.

(c) Failure modes

(i) For class notation **DPS-II** the loss of position shall not be allowed to occur in the event of a single failure in any active component or system. Normally static components will not be considered to fail if adequate protection is provided. Single failure criteria for **DPS-II** include:

(1) any active component or system

(2) static components which are not properly documented with respect to protection

(3) a single inadvertent act of operation. If such an act is reasonably probable

(4) systematic failures or faults that can be hidden until a new fault appears

(5) automatic interventions caused by external events, when found relevant.

(ii) For class notation **DPS-III**, loss of position shall not be allowed to occur in the event of a single failure. In addition to the single failures listed under (i) above, the single failure criteria for **DPS-III** include:

(1) all static components in the DP system

(2) all components in any watertight compartment, from fire and flooding

(3) all components in any one fire-subdivision, from fire or flooding (for cables, see also 10.2.2(d)(i)).

(iii) Based on the single failure definition in (i) or (ii) above, worst case failures shall be determined and used as the criterion for the consequence analysis.

(iv) In order to meet the single failure criteria in (i) or (ii) above, redundancy of components will be necessary as follows:

(1) for notation **DPS-II**, redundancy of all active components

(2) for notation **DPS-III**, redundancy of all components and physical separation of the components.

(d) General separation requirements for **DPS-III**

(i) Systems that forms the designed redundancy requirement shall be separated by bulkheads, fire-insulated by A-60 class division, and in addition, watertight if below the damage water line.

10.2.3 System arrangement

(a) DP-control centre

(i) The DP-vessel shall have its DP-control centre designated for DP operations, where necessary information sources, such as indicators, displays, alarm panels, control panels and internal communication systems are installed. This equipment shall be arranged with easy access to the operator so that he does not need to change position when operating the control systems at the DP-control centre.

(ii) The location of the DP-control centre shall be chosen to suit the main activity of the vessel.

(iii) The DP-control centre shall be arranged such that the DP operator has a good view of the vessel's exterior limits and the surrounding area.

(iv) For vessels with **DPS-III** notation, an emergency DP-control centre shall be arranged for the location of the back-up DP-control system. This centre shall be separated by A-60 insulation from the main centre, and located with optimum ease of access from the main DP-control centre.

(v) The emergency DP-control centre shall be arranged with similar view to the vessel's exterior limits and the surrounding area as the main DP-control centre.

(b) Arrangement of positioning control systems

(i) Automatic control mode shall include control of position and heading.

(ii) Set-points for control of position and heading shall be independently selectable.

(iii) Notation **DPS-I** shall include:

(1) an automatic position control mode

(2) an independent joystick system with automatic heading control

(3) manual levers for each thruster.

(iv) Notation **DPS-II** shall include:

(1) an automatic position control mode consisting of at least two mutually independent control systems

(2) an independent joystick system with automatic heading control

(3) manual levers for each thruster.

(v) Notation **DPS-III** shall include:

(1) an automatic position control mode consisting of at least two mutually independent control systems

(2) an independent joystick system with automatic heading control

(3) manual levers for each thruster

(4) an automatic back-up positioning control system.

(vi) The back-up system shall include an automatic position control mode, and shall be interfaced with a position reference, VRS and Gyro compass which shall be able to operate independently of the main system specified in (v) above.

(c) Arrangement and layout of control panels

(i) The information sources like displays, indicators, etc. shall provide information in a readily usable form.

(ii) The operator shall be provided with immediate information of the effect of any actions, preferably with graphics.

(iii) Where applicable, feedback signals shall be displayed, not only the initial command.

(iv) Easy switch-over between operational modes shall be provided. Active mode shall be positively indicated.

(v) Positive indications of the operational status of the different systems shall be given.

(vi) Indicators and controls shall be arranged in logical groups and shall be coordinated with the geometry of the vessel, when this is relevant.

(vii) If control of a sub-system can be carried out from alternate control stations, positive indication of the station in charge shall be provided. When responsibility is transferred from one station to another, this shall be indicated.

(viii) Precautions shall be taken to avoid inadvertent operation of controls if this may result in a critical situation. Such precautions may be proper location of handles etc, recessed or covered switches, or logical requirements for operations.

(ix) Interlocks shall be arranged, if erroneous sequence of operation may lead to a critical situation or damage of equipment.

(x) Controls and indicators placed on the navigation bridge shall be sufficiently illuminated to permit use at night without difficulty. Lights for such purposes shall be provided with dimming facilities.

(d) Arrangement and layout of data communication links

(i) When two or more thrusters and their manual controls are using the same data communication link, this link shall be arranged with redundancy in technical design.

(ii) When the DP-control system uses a data communication link, this link shall be separate from the communication link(s) for manual control.

(iii) The communication link for the DP-control system shall be arranged with redundancy in technical design for **DPS-II** and with redundancy in technical design and physical separation for **DPS-III**.

(iv) For **DPS-II** no failure mode, as specified in 10.2.2(c)(i) and 10.2.2(c)(iv), and for **DPS-III**, as specified in 10.2.2(c)(ii) and 10.2.2(c)(iv), shall not have an effect on the functionality of both networks.

(v) The independent joystick may share the redundant communication link described in (i) above with the manual control, but not with the DP-control system.

10.3 Control System

10.3.1 General

Thrusters and sensors used in DP-operations shall have indications for:

(a) "available for DP"

(b) "in DP operation"

(c) "not in DP operation"

10.3.2 System Arrangement

(a) Independent joystick thruster control system

(i) It shall be possible to control the thrusters manually by a common joystick independent of the DP control system. The independent joystick system shall include selectable automatic heading control.

(ii) Upon selection of control from the independent joystick control system enabling of the thrusters for joystick control shall be straightforward.

(iii) Any failure in the independent joystick control system shall initiate an alarm.

(iv) Any failure causing operator loss of control of the thrusters in the independent joystick control system shall freeze the thrust commands or set the thrust commands to zero. If the failure affects only a limited number of thrusters, the command to these affected thrusters may be set to zero, while keeping the other unaffected thrusters in joystick control.

(b) DP-control system

(i) An alarm shall be initiated when the vessel exceeds preset position and heading limits.

(ii) The positioning control system shall perform self-check routines which shall bring the system to a stop, or automatically change-over to a standby (slave) system when critical failure conditions are detected. An alarm shall be initiated in case of failure.

(iii) When stopped, either by automatic or manual means the positioning control system shall set the thrust commands to zero.

(iv) Loss of one or multiple position reference system input and/or one or multiple sensor inputs shall not lead to significant change in thrust output.

(v) Upon recovery of position and heading reference input the DP control system shall not automatically apply the last position or heading set point (set points before loss of input) when this is significantly different from the actual vessel position and/or heading. If any other set point than the actual vessel position and/or heading is applied then it is to be operator chosen.

(vi) When combining position reference systems and/or sensors in one unit where more than one function or system can be lost upon one common failure, the consequence to the total system upon such a failure shall not exceed loss of any one non-combined unit in a minimum configuration as specified in Table IV 10-2.

(vii) For notation **DPS-II** and **DPS-III**:

(1) There shall be at least two automatic positioning control systems. These systems shall be arranged such that, after the occurrence of any single failure within the DP-control system, command output to a group of thrusters able to position the ship, can still be produced.

(2) One of the positioning control systems shall be selected as the online system. This selection shall be possible by manual means and by automatic action on failure of the online system. The other system(s) shall be in standby condition for auto or manual change over. In case of automatic change over upon failure detection, the system that was online shall remain unavailable after repair until manually reselected as the online (or standby) system.

(3) Any failure of an online or standby positioning control system, sensor or positioning reference system selected, shall initiate an alarm.

(4) If two or more positioning control systems are in use, then self monitoring and comparison between systems shall be arranged, so that operation warnings can be produced upon detection of an unexpected difference in thrust command or position or heading. Such techniques shall not jeopardize the independence of each system or risk common mode failures.

(5) The automatic transfer of online responsibility shall not cause thrust changes of such magnitude that it will be detrimental to the positioning of the vessel.

(6) There shall be an identification of the online positioning control system at the operator panel.

(viii) For notation **DPS-III**:

(1) If three independent positioning control systems are chosen for the main system, one of these may serve as the back-up, provided that the necessary independence, as required for the back-up, is achieved.

(2) There shall be at least one positioning reference system and one set of sensors connected to the back-up positioning control system, in such a way that their operation is ensured, independent of the condition of the main system.

(3) The back-up positioning control system shall operate as a "hot back-up", and shall, at all times, be ready to assume command, and maintain the position from the moment of assuming command.

(4) The back-up positioning control system shall perform self check routines and communicate its status to the main system. An alarm shall be initiated if it fails or is not ready to take control.

(5) The back-up positioning control system shall be capable of being activated by the operator, at the main DP-control centre and at the back-up station. The nature of the switching shall be such that no single failure will render the back-up inoperable together with the main system.

(c) Thruster control mode selection

(i) The thruster control mode, i.e. manual, independent joystick and automatic, shall be selectable by a simple device located in the DP- control centre. The control mode selector may consist of a single selector switch, or individual selectors for each thruster.

(ii) The control mode selector shall be arranged so that it is always possible to select manual controls after any single failure in the DP-control mode.

(iii) For **DPS-II** and **DPS-III** notations, the mode selector shall not violate redundancy requirements.

(iv) The mode selector may consist of a single switch also for **DPS-III** even if this may be damaged by a fire, or other hazards, provided that the back-up DP-control system is still selectable.

10.3.3 Positioning Reference System

(a) General

(i) Where more than one positioning reference system is required, at least two shall be based on different principles.

(ii) Positioning reference systems shall comply with the relevant rules for electrical, mechanical, and hydraulic components and subsystems.

(iii) Monitoring of positioning reference systems shall include alarms for electrical and mechanical functions, i.e. power, pressure, temperature as relevant.

(iv) Positioning reference systems shall provide new position data with a refresh rate and accuracy suitable for the intended DP-operations.

(v) It shall be simple for the operator to establish the operational status of all position reference systems at any time. Which systems that is in operation, with data accepted or discarded, shall be clearly identified.

(vi) When data from several position references are combined into a mean positioning, by filtering techniques, the reference position of each shall, at least, be available at the operator's request.

(vii) When several systems are combined to provide a mean reference, the mean value used shall not change abruptly by one system being selected or deselected.

(viii) Failures in a positioning reference system that might give degraded quality, loss of position signal or loss of redundancy shall initiate an alarm.

(ix) Limit alarms shall be provided for systems, which have defined range limits.

(x) If a positioning reference system can freeze or otherwise produce corrupt data output, a method shall be provided to enable rejection of the data.

(xi) For **DPS-III**, at least one of the positioning reference systems shall be connected directly to the back-up control system and separated by A-60 class division, from the other positioning reference systems.

(xii) When more than one positioning reference system is required, then each shall be independent with respect to signal transmission and interfaces.

(xiii) For **DPS-I**, at least one of the required position reference systems' HMI(Human Machine Interface) is to be independent of the DP control system. This HMI is to be placed at the DP control centre in view of the DP operator.

(xiv) For **DPS-II** and **DPS-III**, at least two of the positioning reference systems' HMIs are to be independent of the DP control system. These HMIs are to be placed at the main DP control centre in view of the DP operator. The two reference systems fulfilling this requirement shall have their power supply from different UPSs.

(xv) Power supply to the position reference systems shall be from UPS. For **DPS-II** and **DPS-III**, arrangement of power supply shall be in accordance with the overall redundancy requirement.

10.3.4 Sensors

(a) General

(i) When more than one sensor for a specific function is required, then each shall be independent with respect to power, signal transmission, and interfaces. For **DPS-II** and **DPS-III** arrangement of power supply shall be in accordance with the overall redundancy requirement.

(ii) Monitoring of sensors shall include alarms for electrical and mechanical functions, i.e. power, pressure, temperature as relevant.

(iii) When failure of a sensor is detected, an alarm shall be initiated even if the sensor is in a standby or offline use at the time of failure.

(iv) Sensors and/or reference systems may be shared with other systems provided failure in any of the other systems cannot spread to the DP-system.

(v) The DP-control centre is the main control station for equipment in the DP-control system which requires manual operation.

(vi) For the notation **DPS-III**, the sensors connected directly to the back-up positioning control system shall in general be installed in the same A-60 fire zone as the backup control system.

10.3.5 Display Units

(a) General

(i) The display unit shall present a position plot including the location of the vessel relative to the reference sources. The plot may be vessel relative, or a true motion presentation.

(ii) For positioning control systems, designed with redundancy, there shall be at least two independent position displays.

(iii) If the display is used for presentation of warnings or alarms, these shall have priority over other information and not be inhibited by other data currently being displayed

10.3.6 Monitoring

(a) Alarm system

(i) The DP-control centre shall receive alarms and warnings reflecting the status of the DP-system.

(ii) If the alarms in the DP-control centre are slave signals of other alarm systems, there shall be a local acknowledgement and silencing device.

(iii) The silencing device in (ii) above shall not cause inhibiting of new alarms.

(iv) The alarms to be presented in the DP-centre shall normally be limited to functions relevant to DP-operation.

(b) Consequence analysis

(i) For **DPS-II** and **DPS-III** notations, the dynamic positioning control systems shall perform an analysis of the ability to maintain position after worst case failures. An alarm shall be initiated, with a maximum delay of 5 minutes, when a failure will cause loss of position in the prevailing weather conditions.

(ii) The consequence analysis shall be repeated automatically at pre-set intervals. The operator shall be able to monitor that the analysis is in progress.

(iii) The analysis shall have a lower priority than the control and alarm tasks. If the analysis is not completed within 2 minutes then an alarm shall be initiated.

10.4 Thruster Systems

10.4.1 General

(a) Rule application

(i) The thruster systems shall be designed for continuous operation.

(ii) When the main propulsion propellers are included under DP-control, they shall be considered as thrusters and all relevant functional requirements of this chapter will apply.

(iii) When the main steering system is included under DP control, the steering gear shall be designed for continuous operation.

(b) Thruster configuration

(i) The thruster configuration shall include thrust units which together will produce, at any time, transverse and longitudinal thrust, and a yawing moment.

(ii) When a redundant thrusters configuration is required, there shall be transverse and longitudinal thrust, and yawing moment after any single failure.

(c) Thruster control

(i) Individual and separate manual follow up control of each thruster shall be arranged in the DP-control centre. The manual control shall be independent of the DP-control system and include the ability to stop the prime mover, azimuth and pitch or rpm control.

(ii) Manual thruster control shall be available at all times, also during all failure conditions in dynamic positioning or independent joystick control systems.

(iii) A single failure in the thruster control system shall neither cause significant increase in thrust output nor make the thruster rotate.

(iv) It shall be possible to stop the thrusters individually from the main DP-control station by means independent of the positioning and thruster control systems. This emergency stop shall be arranged with separate cables for each thruster.

(v) For notations **DPS-II** and **DPS-III**, an alarm shall be initiated upon loop failure, i.e. broken connections or short-circuit, in the emergency stop system.

(d) Indication

(i) Running and stop, pitch and r.p.m. and azimuth for each thruster shall be displayed at the DP-control centre.

(ii) The displays of (i) above shall be continuously available. At least pitch and r.p.m. and azimuth displays shall be readable from the normal position of the DP-operator. Slave panel meters shall be installed if the displays are not readable from the normal position of DP-operator.

(iii) The indication shall not be common with the feedback used by the closed-loop control system.

10.5 Power Systems

10.5.1 General

(a) The power systems shall comply with the relevant rules for classification, for all class notations in this chapter.

(b) Number and capacity of generators

(i) For notation **DPS-I,** the generator capacity shall be in accordance with the requirements of Part VII.

(ii) For notations **DPS-I, DPS-II** and **DPS-III,** to prevent overloading the power plant, interlocks or thrust limitations shall be arranged.

(iii) For notations **DPS-II** and **DPS-III,** the number of generators shall comply with the redundancy requirements as defined in the single failure criteria in 10.2 of this chapter.

(c) Power management (for **DPS-II** and **DPS-III**)

(i) An automatic power management system shall be arranged, operating with both open and closed bus-bar breakers. This system shall be capable of performing the following functions:

(1) load dependent starting of additional generators

(2) block starting of large consumers when there is not adequate running generator capacity, and to start up generators as required, and hence to permit requested consumer start to proceed

(3) if load dependent stop of running generators is provided, facilities for disconnection of this function shall be arranged

(4) if functionality for disconnection of generator breakers, bus-tie breakers or thruster breakers is provided, facilities for disconnection of this function shall be arranged.

(ii) A failure in the power management system shall not cause alteration to the power generation, and shall initiate an alarm in the DP-control centre.

(iii) It shall be possible to operate the switchboards in manual as required for the classification, with the power management system disconnected.

(iv) Overload, caused by the stopping of one or more generators, shall not create a black-out.

(d) Main and distribution switchboards arrangement

(i) For **DPS-I** notation, the requirements of Part VII are applicable and adequate. For **DPS-II** and **DPS-III** notations, additional requirements will apply, see (ii) to (vii).

(ii) For notations **DPS-II** and **DPS-III**, the switchboard arrangement shall be such that no single failure will give a total black-out.

(iii) When considering single failures of switchboards, the possibility of short-circuit of the bus-bars has to be considered.

(iv) A main bus-bar system consisting of at least two sections, with bus-tie breaker(s) or inter-connector breaker(s), shall be arranged. When the system is designed to operate with closed bus-tie breaker in DP mode, this breaker shall be a circuit breaker capable of breaking the maximum short circuit current in the system, and which is selective in relation to generator breakers to avoid total loss of main power (black-out).

(v) For **DPS-II** notation, it is accepted that the bus-bar sections are arranged in one switchboard. For **DPS-III** notation, it is required that each bus-bar section is isolated from the other(s) by watertight A-60 partitions. There shall be a bus-tie breaker on each side of this partition.

(vi) Bus-bar control and protection systems shall be designed to work with both open and closed bus-tie breakers.

(vii) The online power reserve, i.e. the difference between online generator capacity and generated power at any time, shall be displayed in the DP-control centre. The indication shall be continuously available. For split-bus power arrangements, indications shall be provided for individual bus sections.

10.5.2 Control System Power Supply (applies to **DPS-I, DPS-II** and **DPS-III**)

(a) General

(i) The controllers and measuring systems shall be powered from uninterruptible power supplies (UPS). The arrangement and number of UPS shall be in accordance with Table IV 10-2 in 10.2 of this Part.

(ii) The power supply for the independent joystick system shall be independent of the DP-control system UPSs.

(iii) The battery installed for each UPS shall be able to provide output power at maximum load for 30 minutes after loss of charger input power. Loss of charger input power shall initiate an alarm in the DP-control system.

(iv) For notation **DPS-II**, the input power supply to the redundant UPSs shall be derived from different sides of the main switchboard.

(v) For notation **DPS-III**, the input power supply to the redundant UPSs for the main DP control system shall be derived from different sides of the main switchboard.

10.5.3 Auxiliary Systems (Applies to **DPS-II** and **DPS-III**)

(a) General

(i) For **DPS-II** and **DPS-III**

The auxiliary systems shall be arranged in accordance with the redundancy requirements as given for these notations. See 10.2.2 of this chapter.

(ii) For **DPS-II** and **DPS-III**

Failure shall be considered for all active components as specified in Sec.10.2.2 of this chapter. Unless otherwise specified in the rules, fixed piping may be shared by components designed with redundancy, for the **DPS-II** notation.

(iii) For **DPS-III**

Separate piping shall be arranged for systems providing required redundancy. Cross-over pipes are acceptable, except in ventilation ducts, provided these can be closed at both sides of separating bulkheads.

(b) Fuel oil

(i) For **DPS-II** and **DPS-III**, the fuel oil supply shall be arranged with full separation between systems providing required redundancy, in view of the risk of fuel oil contamination.

There shall be at least one service tank serving each dedicated system. Cross-over facilities may be arranged, but must, if arranged, be kept closed in normal operation.

(ii) For **DPS-III**, each service tank shall be in separate compartments, and the valves in the cross-over facilities, if arranged, shall be located as close as possible to the bulkhead and operable from both sides.

(ii) For **DPS-II** and **DPS-III**

If the fuel system requires heating, then the heating system shall be designed with the appropriate level of redundancy unless diesel oil tanks, which do not require heating, are arranged as required in 10.5.3(a)(i).

(c) Cooling water

(i) For **DPS-II** and **DPS-III**

Fresh water cooling systems shall be arranged with full separation between systems providing required redundancy, in view of the risk of severe loss of water or accumulation of gas due to leakage.

(d) Pneumatic systems

(i) Pneumatic systems shall be arranged with full separation between systems providing required redundancy, in view of the risk of leakage.

Table IV 10-1
Requirements for Documentation of Instrumentation Systems

	D1	D2	D3	D4	D5	D6	D7	D8	D9	D10	D11	D12	D13	D14	D15	D16
For class notation **DPS-I**																
DYN	X	X	X	X	X	X	X			(2)	(2)	(2)	(2)	X	X	(1),(2)
JOY		X	X	X	X		X						(2)	X	X	(1),(2)
TCM		X	X	X	X	X	X				(2)	(2)			X	
PRS				X	X		X						X		X	(1),(2)
VEO				X	X		X						X		X	
For class notation **DPS-II**																
DYN	X	X	X	X	X	X	X		X	(2)	(2)	(2)	(2)	X	X	(1),(2)
JOY		X	X	X	X		X						(2)	X	X	(1),(2)
TCM		X	X	X	X	X	X		X		(2)	(2)			X	
PRS				X	X		X						X		X	(1),(2)
VEO				X	X		X						X		X	
PMS																(1),(2)
For class notation **DPS-III**																
DYN	X	X	X	X	X	X	X	X	X	(2)	(2)	(2)	(2)	X	X	(1),(2)
JOY		X	X	X	X		X						(2)	X	X	(1),(2)
TCM		X	X	X	X	X	X	X	X		(2)	(2)			X	
PRS				X	X		X	X					X		X	(1),(2)
VEO				X	X		X	X					X		X	
PMS																(1),(2)

Instrumentation systems:

DYN	Dynamic positioning control and monitoring system
JOY	Independent joystick system
TCM	Thruster control mode selection
PRS	Position reference system(s)
VEO	Wind, VRS and gyro
PMS	Power Management System

Documentation types:

D1	System philosophy (T)
D2	Functional description
D3	System block diagrams (T)
D4	User interface documentation
D5	Power supply arrangement (T)
D6	Circuit diagrams
D7	Instrument and equipment list (T)
D8	Cable routing layout drawing (T)
D9	Failure mode and effect analysis (FMEA) and redundancy test procedure (T)
D10	Software quality plan, based upon life cycle activities
D11	Installation manual
D12	Maintenance manual
D13	Data sheets with environmental specifications
D14	Test program for testing at the manufacturer (T)
D15	Test program for quay/sea trial (T)
D16	Operation manual

Notes:

(T) Required also for type approved systems.

(1) One copy shall be submitted for information only.

(2) Shall be available during certification and trials.

(3) For essential hardwired circuits (for emergency stop, shutdown, interlocking, mode selection systems, back-up selection systems, etc.). Details of input and output devices and power source for each circuit.

Table IV 10-2
System Arrangement

Subsystem or component			Minimum requirements for class notation		
			DPS-I	**DPS-II**	**DPS-III**
Electrical power system	Electrical system		No-redundancy(3)	Redundancy in technical design	Redundancy in technical design and physical separation (separate compartments)
	Main switchboard		1(3)	1	2 in separate compartments
	Bus-tie breaker		0(3)	1	2, 1 breaker in each MSB
	Distribution system		Non-redundant(3)	Redundant	Redundant, through separate compartments
	Power management		No	Yes	Yes
Thrusters	Arrangement of thrusters		No-redundancy	Redundancy in technical design	Redundancy in technical design and physical separation (separate compartments)
	Single levers for each thruster at main DP-control center		Yes	Yes	Yes
Positioning control system	Automatic control; number of computer systems		1	2	2 + 1 in alternate control station
	Manual control; independent joystick system with automatic heading control(2)		Yes	Yes	Yes
Sensors	Position reference systems		2	3	3 whereof 1 in alternate control station
	External sensors	Wind	1	2	2 whereof 1 in alternate control station
		Gyro compass1	1	3 (1)	3(1) whereof 1 in alternate control station
		Vertical reference sensor(VRS)	1	3	3 whereof 1 in alternate control station
UPS			1	2	2 + 1 in separate compartment
Printer			Yes	Yes	Yes
Alternate control station for dynamic positioning control back-up unit			No	No	Yes

Notes:

(1) One of the three required gyros may be replaced by a heading device based upon another principle, as long as this heading device is type approved as a THD (Transmitting Heading Device) as specified in IMO Res. MSC.116 (73).

(2) The heading input may be taken from any of the required gyro compasses.

(3) When this is part of the ship normal electrical power system (i.e. used for normal ship systems, not only the DP system), then Part VII of the Rules applies.

Tel: *+886 2 25062711*
Fax: *+886 2 25074722*
E-mail: *cr.tp@crclass.org*
Website: *http://www.crclass.org*
© CR – All rights reserved

財團法人驗船中心
CR CLASSIFICATION SOCIETY

RULES FOR THE CONSTRUCTION AND CLASSIFICATION OF STEEL SHIPS 2022

PART V – BOILERS, PRESSURE VESSELS, THERMAL OILHEATERS AND INCINERATORS

July 2022

財團法人驗船中心
CR CLASSIFICATION SOCIETY

RULES FOR THE CONSTRUCTION AND CLASSIFICATION OF STEEL SHIPS 2022

PART V – BOILERS, PRESSURE VESSELS, THERMAL OILHEATERS AND INCINERATORS

July 2022

RULES FOR THE CONSTRUCTION AND CLASSIFICATION OF STEEL SHIPS

PART I CLASSIFICATION AND SURVEY

PART II HULL CONSTRUCTION AND EQUIPMENT

PART III SPECIAL SERVICE AND TYPE OF SHIPS

PART IV MACHINERY INSTALLATIONS – CONSTRUCTION AND SHAFTING

PART V BOILERS, PRESSURE VESSELS, THERMAL OIL HEATERS AND INCINERATORS

PART VI PIPING AND PUMPING SYSTEMS

PART VII ELECTRICAL INSTALLATIONS

PART VIII AUTOMATIC OR REMOTE CONTROL AND MONITORING SYSTEMS

PART IX FIRE PROTECTION, DETECTION AND EXTINCTION

PART X REFRIGERATED CARGO INSTALLATIONS

PART XI MATERIALS

PART XII WELDING

PART XIII NAVIGATIONAL SAFETY SYSTEMS

PART XIV GOAL-BASED SHIP CONSTRUCTION STANDARDS SHIPS

PART XV HULL CONSTRUCTION AND EQUIPMENT FOR SHIPS LESS THAN 90 M IN LENGTH

List of major changes in Part V from 2019 edition

Acronyms

AIS	Automatic Identification System
ANTS	Automatic Navigation and Track-keeping System
ARPA	Automatic Radar Plotting Aid
BC Code	Code of Safe Practice for Solid Bulk Cargoes
BNWAS	Bridge Navigational Watch Alarm System
CA	Controlled Atmosphere
CDI	Chemical Distribution Institute
COW	Crude Oil Washing
CPA	Closest Point of Approach
CPP	Controllable Pitch Propeller
CSC	International Convention for Safe Containers
CSR	Common Structural Rules
CTOD	Crack Tip Opening Displacement
ECDIS	Electronic Chart Display and Information System
EEBD	Emergency Escape Breathing Devices
ENC	Electronic Navigational Chart
ESP	Enhance Survey Plan
ETA	Emergency Towing Arrangement
FEU	Forty-foot Equivalent Unit
FMEA	Failure Mode & Effect Analysis
FRP, GRP	Fibreglass Reinforced Plastics
FTP Code	International Code for Application of Fire Test Procedures
GBS	Goal-Based ship construction Standards
GDC	General Dry Cargo
GLONASS	Global Navigation Satellite System
GMDSS	Global Maritime Distress and Safety System
GPS	Global Positioning System
HAZ	Heat Affected Zone
HHP anchor	High Holding Power anchor
HSC	High Speed Craft
HTS	High Tensile Steel
IACS	International Association of Classification Societies
IBC Code	International Code for the Construction and Equipment of Ships Carrying Dangerous Chemicals in Bulk

ICS	The International Chamber of Shipping
IEC	International Electrotechnical Commission
IGC Code	International Code for the Construction and Equipment of Ships Carrying Liquefied Gases in Bulk
ILO	International Labour Organization
IMDG Code	International Maritime Dangerous Goods Code
IMO	International Maritime Organization
ISO	International Standards Organization
LAN	Local Area Network
LCS	Loading Computer System
LEL	Lower Explosive Limit
LRIT	Long-range Identification and Tracking of ships
MARPOL	International Convention for the Prevention of Pollution from Ships
MARVS	Maximum Allowable Relief Valve Setting
MEPC	Marine Environment Protection Committee
MLC	Maritime Labour Convention
MSC	Maritime Safety Committee
NDT	Nondestructive Testing
OCIMF	The Oil Companies International Marine Forum
OOW	Officer Of the Watch
PA	Public Address
PMA	Permanent Means of Access
PMS	Planned Machinery Maintenance Scheme
RH	Relative Humidity
PSPC	Performance Standard for Protective Coating
SENC	System Electronic Navigational Chart
SHHP anchor	Super High Holding Power anchor
SOLAS	International Convention for the Safety of Life at Sea
SRE	Ship Recycling
STCW	International Convention on Standards of Training, Certification and Watch-keeping for Seafarers
STS operation	Ship-To-Ship operation
S-VDR	Simplified Voyage Data Recorder
TCPA	Time to CPA
TEU	Twenty-foot Equivalent Unit
THD	Total Harmonic Distortion

TMCP	Thermo-Mechanical Controlled Processing
UPS	Uninterruptible Power Supply
VDR	Voyage Data Recorder
VEC	Vapor Emission Control

RULES FOR THE CONSTRUCTION AND CLASSIFICATION OF STEEL SHIPS

PART V
BOILERS, PRESSURE VESSELS, THERMAL OIL HEATERS AND INCINERATORS

CONTENTS

Chapter 1 General Requirements 1
1.1 General 1
1.2 Materials 2
1.3 Drawings and Data 3

Chapter 2 Construction 5
2.1 Workmanship 5
2.2 Welded Construction 5
2.3 Stress Relieving 6
2.4 Access Arrangement 6

Chapter 3 Strength Calculations 16
3.1 Shell, Drums or Headers 16
3.2 End Plates without Stays or Other Supports 16
3.3 Stayed Surfaces 23
3.4 Compensation of Openings 24
3.5 Stay, Girders and Stay Tubes 28
3.6 Furnaces and Flues 29
3.7 Rectangular Section Headers 31
3.8 Tubes 33

Chapter 4 Mountings for Boilers and Pressure Vessels 37
4.1 General Requirements for Boiler Mountings 37
4.2 Boiler Safety Valves 37
4.3 Other Boiler Mountings 40
4.4 Safety Devices and Alarm Devices of Boilers 43
4.5 Mountings for Pressure Vessels 44
4.6 Additional Requirements for Shell Type Exhaust Gas Economizers 45

Chapter 5 Installation and Spare Parts 47
5.1 Installation of Boilers and Pressure Vessels 47
5.2 Spare Parts for Boilers 48

Chapter 6 Thermal Oil Heaters 49
6.1 General 49
6.2 Safety Devices Etc. for Thermal Oil Heaters Heated by Flame 49
6.3 Safety Devices Etc., for Thermal Oil Heaters Directly Heated by the Exhaust Gas of Engines 50
6.4 Thermal Oil Systems 50

Chapter 7 Incinerators 51
7.1 General 51
7.2 Drawings and Data 51
7.3 Construction 51
7.4 Safety Devices and Alarm Devices 52

Chapter 8 Tests and Inspections 54
8.1 Welding Tests 54
8.2 Hydraulic Pressure Tests 54
8.3 On-board Tests 54

Appendix 1 Compensation for Opening 56
A1.1 Calculation Procedure of Compensation for Opening 56
A1.2 Calculation of Area Available for Compensation 57

Chapter 1
General Requirements

1.1 General

1.1.1 Boilers and pressure vessels for main and essential auxiliary services, thermal auxiliary services, thermal oil heaters and incinerators together with their accessories and mountings are to be constructed and installed on board in accordance with the requirements of this part under the supervision of the Society.

1.1.2 It is recommended that the details not covered by these requirements be in general conformity with the national requirements of the respective country and other recognized standards.

1.1.3 Terms used in this part are defined as follows:

(a) A boiler is a plant which generates steam or hot water by means of flame, combustion gas or other hot gases including the super-heater, reheater, economizer and exhaust gas economizer and other equivalents.

(b) An essential auxiliary boiler is a boiler which supplies steam necessary for the operation of auxiliary machinery essential for main propulsion, auxiliary machinery for manoeuvring and safety, and of generators.

(c) An exhaust gas boiler is an arrangement, containing a steam space or a hot well and an outlet of steam or hot water, in which steam or hot water is generated by the application of heat only from exhaust gas of diesel engines.

(d) An exhaust gas economizer is an arrangement without any steam space or hot well, in which steam or hot water supplied to the boilers is generated by the application of heat only from exhaust gas of diesel engines.

(e) A pressure vessel, including heat exchanger, is a vessel containing gas or liquid with a pressure exceeding the atmospheric pressure at the top of the vessel which is not exposed to flame, combustion gases or hot gases.

(f) Heating surface of a boiler is the areas calculated on the surfaces of the combustion gas side where one side is exposed to combustion gases and the other side to water, but the heating surface of super-heater, reheater, economizer or exhaust gas economizer is excluded, unless specially specified.

(g) Thermal oil heaters are devices in which thermal oil is heated and circulated.

1.1.4 Design pressure

(a) The design pressure of a boiler or a pressure vessel is the maximum allowable working pressure and is to be not less than the highest set pressure of any safety valve.

(b) The calculations made to determine the scantlings of the pressure parts are to be based on the design pressure, adjust where necessary to take account of pressure variations corresponding to the most severe operational conditions.

(c) It is desirable that there is to be a suitable margin between the normal pressure at which the boiler or pressure vessel operates and the lowest pressure at which any safety valve is set to lift, to prevent unnecessary lifting of the safety valve.

(d) The design pressure of economizer is not to be less than the maximum working pressure of the economizer determined basing upon the maximum working pressure of the feed pump.

(e) The design pressure of exhaust gas economizer is not to be less than the maximum working pressure of the exhaust gas economizer determined basing upon the maximum working pressure of the boiler water circulating pump.

(f) In the design of a boiler or pressure vessel it may be necessary to take into account the effect of the following loading in addition to the design pressure:

(i) additional loads due to pressure testing;

(ii) loading from supports and connected piping;

(iii) loading from different thermal expansion;

(iv) fluctuating pressure and temperatures; and

(v) shocking loads due to water hammer or surging of vessel's content.

1.1.5 Design metal temperature

(a) The design metal temperature, as shown in Table V 1-1, is to be taken as the actual metal temperature expected under operating conditions for the pressure part concerned, and is to be stated by the manufacturer when plans of the pressure parts are submitted for consideration.

(b) The design metal temperature of boiler parts is not to be less than the value shown in Table V 1-1 nor less than 250°C.

(c) The design metal temperature of pressure vessel parts in direct contact with hot medium is to be taken as the highest working temperature of the medium.

1.1.6 Groups of boilers and pressures

Boilers and pressure vessels are to be divided into the groups as shown in Table V 1-2.

1.2 Materials

1.2.1 Materials used for the construction of pressure parts of boilers and pressure vessels are to comply with the relevant requirements of Part XI or such other appropriate material specification as may be submitted and approved in connection with a particular design.

1.2.2 Materials used for the construction of Group I boilers and pressure vessels are to be tested and inspected in the presence of the Surveyor in accordance with the requirements of Part XI.

1.2.3 Materials used for the construction of Group II boilers and pressure vessels are to be in accordance with the same requirements as Group I boilers and pressure vessels. However, materials used for the construction of either one of the following pressure vessels may be as specified for Group III pressure vessels:

(a) Design pressure below 0.7 MPa.

(b) Design pressure not exceeding 2.0 MPa, maximum working temperature not exceeding 150°C and internal capacity not exceeding 0.5 m^3.

1.2.4 Materials used for the construction of Group III pressure vessels need not be tested in the presence of the Surveyor. The appropriate material specifications of recognized standards may be accepted as suitable for the intended used, the submission of manufacturer's test results may be required by the Surveyor.

1.2.5 Were nominal bores exceed 100 mm, valves and fittings on boilers and pressure vessels are to be material tested and inspected in accordance with the requirements in 2.3 of Part VI.

1.3 Drawings and Data

1.3.1 If boilers are to be constructed under the supervision of the Society, the following drawings and data are to be submitted for approval before the work is proceeded:

(a) Drawings (with materials and scantlings):

General arrangement of boiler.
Details of shells and headers (including the internal fittings).
Details of seats for boiler fittings and nozzles.
Arrangement and details of boiler tubes.
Arrangement and details of tubes of superheater and reheater.
Detail of internal desuperheater.
Arrangement and details of tubes of economizer or exhaust gas economizer.
Details of air preheater.
Arrangement and details of boiler fitting.
Arrangement of safety valves (with principal particulars).
Fuel oil burning arrangements
Forced draft system.
Other drawings considered necessary by the Society.

(b) Data:

Particulars of boilers.
Welding specifications (with welding procedures, welding consumables and welding conditions).
Strength calculation
Other data considered necessary by the Society.

1.3.2 If pressure vessels are to be constructed under the supervision of the Society, the following drawings and data are to be submitted for approval before the work is proceeded:

(a) Drawings (with type and dimensions of materials specified):

General arrangements.
Details of shells.
Arrangement of pressure relief devices.
Details of washers for fittings and nozzles.
Other drawings considered necessary by the Society.

(b) Data:

Principal particulars.
Welding specifications (with welding procedures, welding consumables and welding conditions).
Strength calculation
Other data considered necessary by the Society.

1.3.3 For Group III pressure vessel intended for water and lubricating oil, drawings need not be submitted for approval if the temperature of the fluid is less than 95°C. In such cases, certification is to be based on visual inspection, review of materials certificates and pressure testing.

1.3.4 For automatically controlled boilers, specification of burning and feeding system including safety devices are to be submitted for approval.

1.3.5 In tankers crude oil or slops may be used as fuel for main or auxiliary boilers according to the special consideration by the Society. For this purpose all arrangement drawings of a crude oil installation with pipeline layout and safety equipment are to be submitted for approval in each case. The construction and workmanship of the boilers and burners are to be satisfactorily proved in operation with crude oil.

Table V 1-1
Design Metal Temperature

Pressure Parts	Surface Heat Transmitted	Temperature Increment to Internal Fluid Temp. (°C)
Shell, End plates, Flat surfaces and Headers	Not exposed to flames	0
	Superheated steam headers not exposed to flames	15
	Protected against fire gases	20
	Exposed to fire gases	50
Stays and stay tubes	Not exposed to flames	0
	Exposed to flames	50
Exhaust gas economizer	Exposed to exhaust gases	50
Unheated boiler tubes	General	0
	Carrying superheated steam	15
Heated boiler tubes	Subject to convection heat	25
	Subject to radiant heat	50
Super-heater tubes	Subject to convection heat	35
	Subject to radiant heat	50

Table V 1-2
Division of Groups for Boilers and Pressure Vessels

Group	Boilers	Pressure Vessels
I (PV-1)	W > 0.35 for pressure parts	W > 4.0 or T > 350 or t > 38 (See Note 2)
II (PV-2)	W ≤ 0.35 for pressure parts	1.0 < W ≤ 4.0 or 150 < T ≤ 350 or 16 < t ≤ 38
III (PV-3)		Unfired pressure vessels not Included in Groups I and II
Where: W = Design pressure, in MPa. T = Maximum operation temperature, in °C. t = Thickness of shell plate, in mm.		

Notes:

(1) Pressure vessels which contains the inflammable high pressure gases of a pressure exceeding 0.2 MPa at a temperature of 38°C are to be classified into Group I. However, where the internal volume does not exceed $0.5m^3$, the requirements for Group II are to be applied to materials, construction and welding.

(2) Pressure vessels where W > 4.0 MPa or t >38 mm may be classified as Group II, provided that they are only subjected to hydraulic pressure at the atmospheric temperature.

(3) Pressure vessels used for refrigerating system are to comply with Part X.

(4) The class of pressure vessels used for dangerous substances not specified in Table V 1-2 will be determined in each case, in accordance with the property of the substance, the service condition, etc.

Chapter 2
Construction

2.1 Workmanship

2.1.1 The preparing of the working on materials, such as cutting, bending, flanging and setting of plates, hole-drilling, etc. are to be carried out with the greatest care and accuracy.

2.1.2 Plates for shell and end plates are, so far as possible, to be hot or cold formed by machine. Forming by hammering is not to be employed. Whether heating is applied or not, forming is not to impair the quality of the materials. The Surveyor may require a forming procedure test to be carried out when necessary.

2.1.3 Steel plates which have been welded, dished, flanged or locally heated are to be effectively heat treated afterwards.

2.1.4 The furnace is to be as true as possible and of a uniform wall thickness. The deformation of the furnace will be determined by measuring the minimum and maximum internal diameters of a cross section. In the case of corrugated furnaces the deformation is not to be more than 1% and nor to exceed 10 mm.

2.1.5 Fitting of tubes in boilers

(a) Tubes are to be attached to the tube plate by expanding or other suitable methods and the tubes are to project through the neck or belt of parallel seating by not less than 6 mm, except for those attached by welding. In case the tube end is fitted by welding, consideration is to be given for preventing the deformation of tubes due to tube-to-tube differential of thermal expansions.

(b) In case where the water tubes are secured from drawing out by means of bellmouthing only, the incline angle of belling is to be not less than 30°.

(c) Tube holes are to be formed in such a way that the tubes can be effectively tightened in them. Where the tubes are practically normal to the tube plates, the parallel seating of the holes is not to be less than 10 mm in depth. Where the tube ends are not normal to the tube plate, the depth of the holes perpendicular to the tube plate is not to be less than 10 mm for tubes not exceeding 60 mm in outside diameter, and not to be less than 13 mm for tubes exceeding 60 mm in outside diameter.

(d) In horizontal smoke tube type vertical boiler, each alternate smoke tube in outer vertical rows of tubes is to be of stay tube.

2.2 Welded Construction

2.2.1 Pressure parts of boilers and pressure vessels together with their accessories may be fabricated in accordance with the applicable requirements of Part XII.

2.2.2 The dimensions and shapes of edges for welded joints are to be as shown in Table V 2-1.

2.2.3 Forms of welded longitudinal and circumferential joints required for boilers and pressure vessels are to be made as shown in Table V 2-2.

2.2.4 Forms of welded circumferential joints and the fixation of accessory as shown in Fig. V 2-1 are considered to be applicable in various services. Other attaching methods may be accepted upon special consideration by the Society.

2.3 Stress Relieving

Boilers and pressure vessels are to be stress relieved in accordance with the requirements in 5.7 of Part XII.

2.4 Access Arrangement

2.4.1 Boilers and pressure vessels are to be provided with manholes or cleaning openings with sufficient size at suitable positions, so that they permit easy access for inspection and maintenance. Where, however, it is impractical to provide manholes or cleaning openings due to constructions or dimensions, two or more inspection openings provided at suitable positions for internal inspection will be accepted as a substitute for them.

2.4.2 Where the cross tubes of vertical boilers are large, there is to be a inspection opening in the shell opposite to one end of each tube sufficiently large to permit the tube to be inspected and cleaned. These inspection openings are to be in positions accessible for that purpose.

2.4.3 Oval manholes in cylindrical shell are to have their minor axes arranged longitudinally, and are to be located clear of the welded joints in the shell.

2.4.4 Two adjacent openings are to have a distance between centers not less than $1\frac{1}{3}$ times their average diameter.

2.4.5 Effective compensation is to be provided for the edges of manholes or other openings where the plate has been weakened by the cutting of the opening to an undue extent. The way of compensation is to be in accordance with the requirements in 3.4 of this Part.

2.4.6 Cover for manholes and other openings are to be formed from steel plates or other approved construction, and all jointing surfaces are to be machined.

2.4.7 Covers of the internal type are to be provided with spigots which have a clearance of not more than 1.5 mm all round, i.e. the axes of the openings are not to exceed those of the cover by more than 3 mm. The width of the manhole gasket seat is to be not less than 16 mm.

2.4.8 The crossbar or dogs for covers are to be of steel.

2.4.9 For small circular openings in headers and similar fittings, an approved type of plug may be used.

2.4.10 Circular flat cover plates may be fitted to raised circular manhole frames not exceeding 400 mm diameter, and for an approved design pressure not exceeding 1.8 MPa.

Table V 2-1
Dimensions and Shapes of Edges for Manual Welded Joints

Shape	Plate Thickness, t (mm)	Dimensions (mm)	Figure to Reference
V	Up to 16	α = 60º～90º a = 1～3 b = 1.5 min.	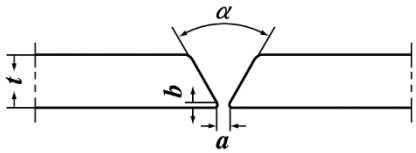
X	12~25	α = 60º～90º h = $\frac{2}{3}$ t a = 2.5～4 b = 2～4	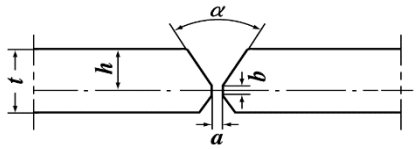
U	16~50	α = 10º~15º B = 15～22 r = 6 min. a = 3～5 b = 3～6	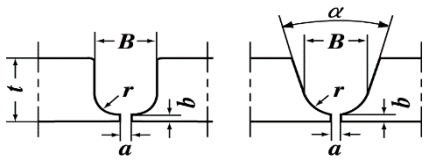
H	25~50	α = 10º~15º h = $\frac{2}{3}$t B = 15～18 r = 6 min. a = 3～4 b = 3～5	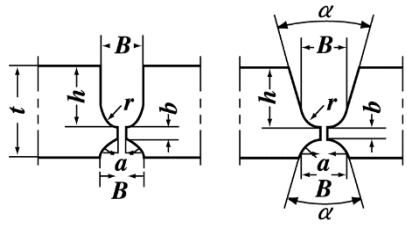
= (both sides)	Up to 16	t_1 = thicker plate t_2 = thinner plate L = $(2t_2+15)$～$4t_2$ b_1 = $1.3t_2$ b_2 = t_2	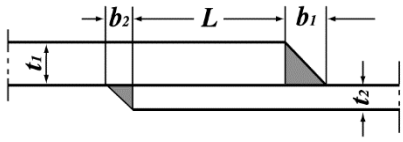
= (one side)	Up to 12	t_1 = thicker plate t_2 = thinner plate L = $(2t_2+10)$～$4t_2$ b = $1.3t_2$	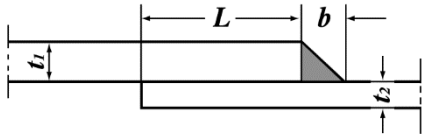

Table V 2-2
Forms of Welded Joints

Group	Joint	Acceptable Type of Welded Joints	Remarks
I	All joints of shell	X, H or V, U (double-welded)	—
		V, U (single welded with backing strip)	Where vessel of small diameter and inside welding is impracticable or t < 12 mm
II	Longitudinal joint	X, H or V, U (double-welded or single-welded with backing strip)	—
	Circumferential joint	X, H or V, U (double-welded or single-welded with backing strip)	t > 16 mm
		V, U (single-welded)	t ≤ 16 mm
III	Longitudinal joint	X, H or V, U (double-welded or single-welded with backing strip)	t > 9 mm
		V (double-welded or single-welded with backing strip), or = (both sides)	t ≤ 9 mm
		V (double-welded or single-welded with backing strip), or = (one side)	t ≤ 6 mm
	Circumferential joint	V, U (single-welded) or = (one side)	—

Welding part	Symbol	Form of Welded Joint	Remarks
Welding joint between Formed end plate and shell	**A-1**	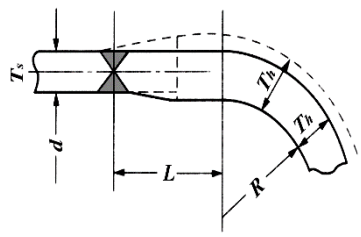	L ≥ $3T_h$, but need not be more than 38 mm. Where $T_h = 1.25T_s$, the above-mentioned value may be reduced.
Welding joint between flat end plate or cover plate and shell	**B-1**	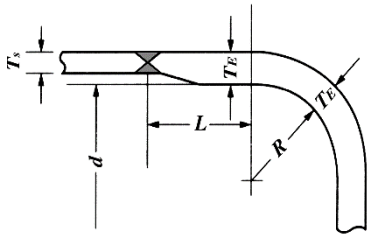	
	B-2	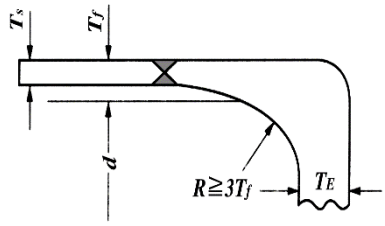	$T_f \geq 2T_s$
	B-3	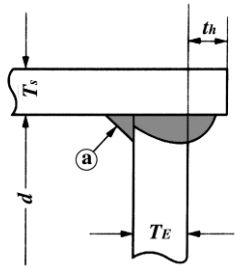	1. $T_s \geq 1.25T_{ro}$ 2. $t_h \geq T_s$ 3. Where the welding of part ⓐ, is considered difficult, the backing strip is to be used or the welding process, which ensures a good penetration to the root, is to be employed.
	B-4	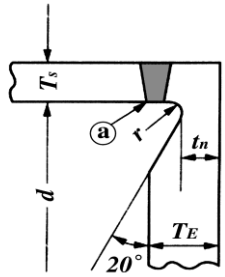	1. $r \geq 0.2T_E$,but not less than 5 mm 2. In welding the part ⓐ, such a welding process as to have a good penetration to the root, is to be employed. 3. End plates or cover plates are to be made of forged steel.

Fig. V 2-1
Acceptable Forms of Welded Joints in Various Services

Welding part	Symbol	Form of Welded Joint	Remarks
Welding joint between flat end plate or cover plate and shell	**B-5**	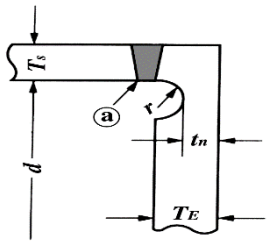	1. $r \geq 0.2\ T_E$, but not less than 5 mm 2. $t_n \geq 1.25\ T_{ro}$ In welding the part ⓐ, such a welding process as to have a good penetration to the root, is to be employed. End plates or cover plates are to be made of forged steel.
	B-6	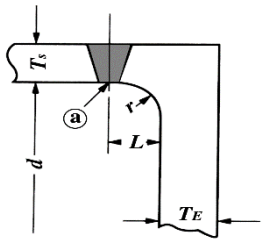	1. $r \geq 0.3\ T_E$ 2. $L \geq T_E$ For the part ⓐ, the same is required as above. End plates or cover plates are to be made of forged steel.
	B-7	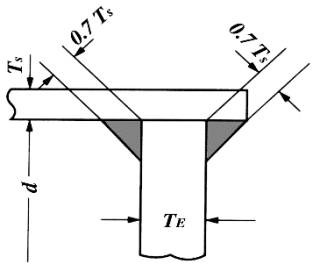	$T_s \geq 1.25T_{ro}$
	B-8	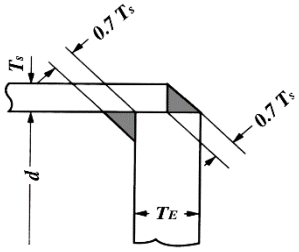	$T_s \geq 1.25T_{ro}$
	B-9	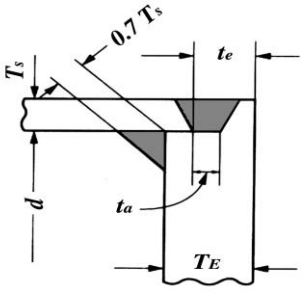	1. $T_s \geq 1.25T_{ro}$, 2. $t_a \geq T_s$ but need not be over 6.5 mm. 3. t_e is not be less than $2T_{ro}$ or $1.25T_s$, whichever is the greater.

Fig. V 2-1
Acceptable Forms of Welded Joints in Various Services(Continued)

Welding part	Symbol	Form of Welded Joint	Remarks
Welding joint between flat end plate or cover plate and shell	**B-10**	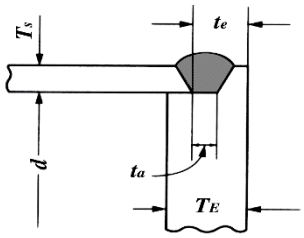	1. Tube headers only. 2. $T_s \geq 1.25T_{ro}$ (circular only). 3. $T_a \geq T_s$, but need not be over 6.5 mm. 4. t_a is not to be less than $2T_{ro}$ or $1.25T_s$, whichever is the greater.
Welding joint between furnace and shell plate or end plate	**C-1**	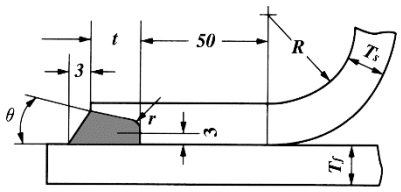	1. To be applied to welding joint on the front side of boiler. 2. $t \geq T_s - 3$ 3. θ ranges between 10° and 20° inclusive. 4. $10 \geq r \geq 5$
	C-2	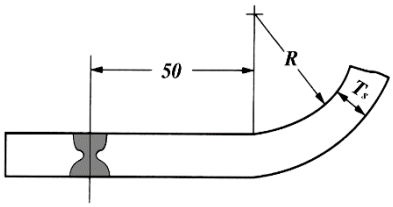	
	C-3	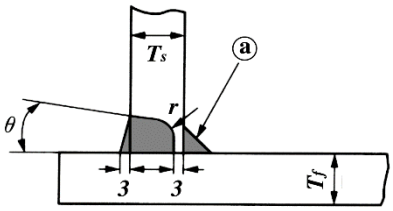	1. To be applied to welding joint on the front side of boiler. 2. The part ⓐ is to be of light fillet weld (throat thickness 4~6 mm) 3. θ ranges between 10° and 20° inclusive. 4. $10 \geq r \geq 5$
	C-4	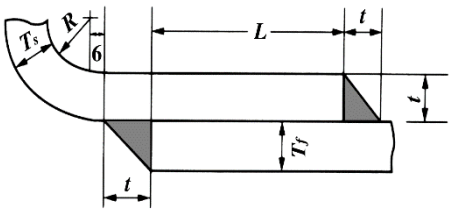	1. To be applied to welding joint on the front side of boiler. 2. $t \geq T_f$ 3. $L \geq 2T_s$

Fig. V 2-1
Acceptable Forms of Welded Joints in Various Services (Continued)

Welding part	Symbol	Form of Welded Joint	Remarks
Welding joint between ogee ring and shell plate	**D-1**	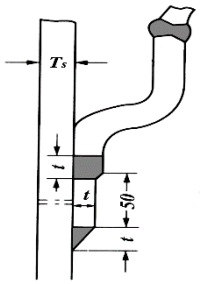	$t \geq T_s$
	D-2	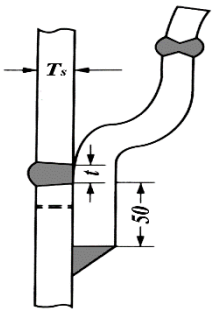	$t \geq T_s$
	D-3	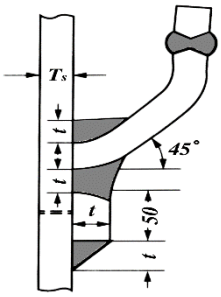	$t \geq T_s$
	D-4	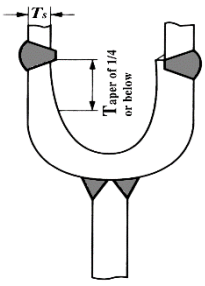	$t \geq T_s$
	D-5	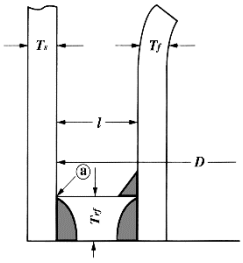	1. If D $\leq$ 750, $l \geq 50$. If D > 750, $l \geq 60$. 2. In welding the part ⓐ, such a welding process as to have a good penetration to the root, is to be employed.

Fig. V 2-1
Acceptable Forms of Welded Joints in Various Services (Continued)

Welding part	Symbol	Form of Welded Joint	Remarks
Welding joint between stay and tube plate or end plate	**E-1**	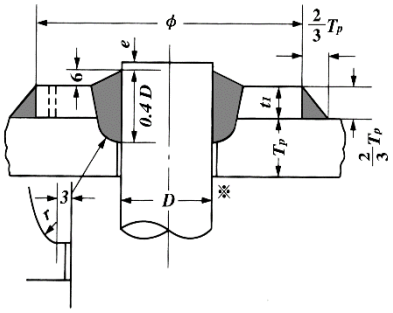	1. $\phi \geq \frac{2}{3}$P (P means the pitch of stays, hereinafter the same being referred) 2. $t_1 \geq \frac{2}{3}T_p$ 3. The part marked by ※ is to be applied with light fillet welding (root thickness, 4 ~ 6 mm) or caulking from the side of plate for filling the gap. 4. On the fire side, to be e ≤ 1.5
	E-2	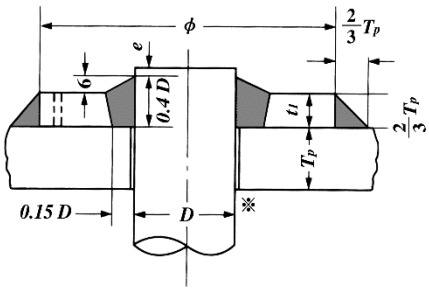	1. $\frac{2}{3}$P > $\phi \geq$ 0.5D 2. $t_1 \geq \frac{2}{3}T_p$ 3. The part marked by ※ is to be same as above. 4. On the fire side, to be e ≤ 1.5
	E-3	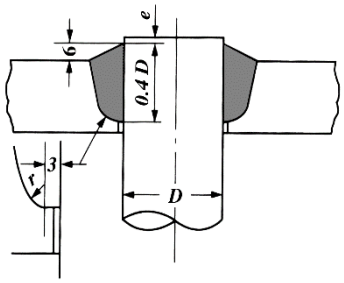	On the side exposed to flame. e ≤ 1.5
	E-4	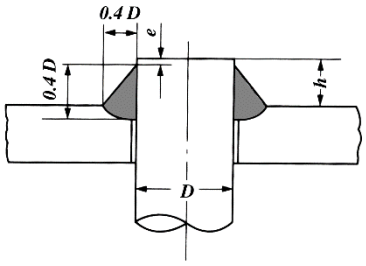	On the side exposed to flame. h ≤ 10 and e ≤ 1.5
Welding joint between stay tube or tube and tube plate or end plate	**F-1**	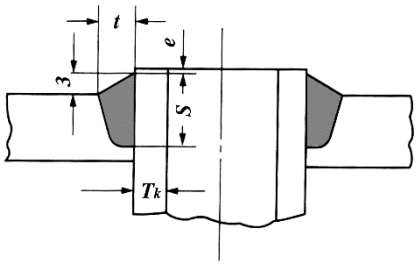	1. $t \geq T_k$ 2. S ≥ 2t 3. On the side exposed to flame. e ≤ 1.5

Fig. V 2-1
Acceptable Forms of Welded Joints in Various Services(Continued)

Welding part	Symbol	Form of Welded Joint	Remarks
Welding joint between stay tube or tube and tube plate or end plate	**F-2**	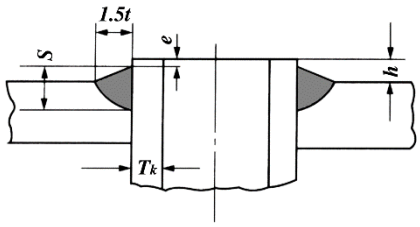	1. $t \geq T_k$ 2. $S \geq 1.5t$ or $t + 3$ 3. On the side exposed to flame. $h \leq 10$ and $e \leq 1.5$
	F-3	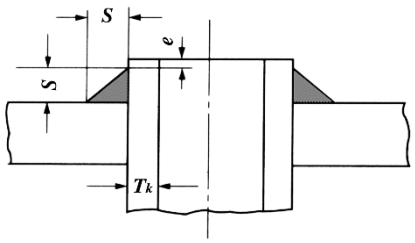	1. $S \geq T_k + 3$ 2. To be welded after having tube expansion. 3. On the side exposed to flame, $e \leq 1.5$
Welding joint between seat or reinforcement ring and shell plate or end plate	**G-1**	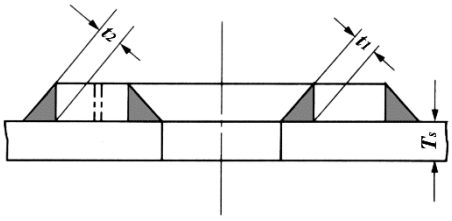	1. $t_1 + t_2 \geq 1.25t_m$ 2. t_1 , $t_2 \geq \frac{1}{3}t_m$, but the minimum is 6.5 mm
	G-2	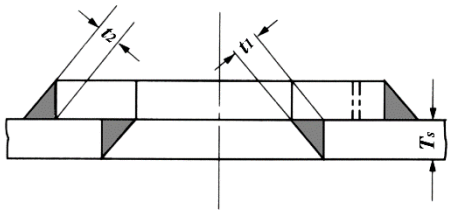	
	G-3	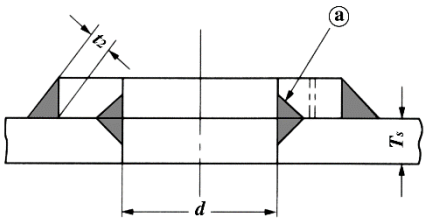	1. To be applicable only for the case of $d < 60$. 2. $t_2 \geq 0.7t_m$ 3. The part ⓐ is to be welded for stopping leakage.
Welding joint between nozzle and shell plate or end plate	**H-1**	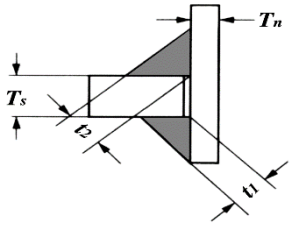	1. $t_c \geq 6.5$ or $0.7t_m$, whichever is the smaller 2. $t_1 + t_2 \geq 1.25t_m$ 3. t_1, $t_2 \geq \frac{1}{3}t_m$, but the minimum is 6.5 mm.

Fig. V 2-1
Acceptable Forms of Welded Joints in Various Services(Continued)

Welding part	Symbol	Form of Welded Joint	Remarks
Welding joint between nozzle and shell plate or end plate	**H-2**	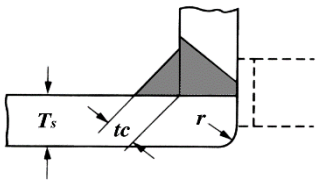	1. $t_c \geq 6.5$ or $0.7\ t_m$, whichever is the smaller 2. $t_1 + t_2 \geq 1.25\ t_m$ 3. t_1 , $t_2 \geq \frac{1}{3} t_m$. but the minimum is 6.5 mm.
	H-3	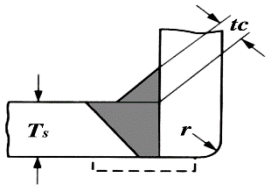	
	H-4	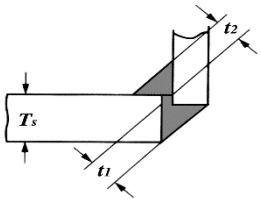	
	H-5	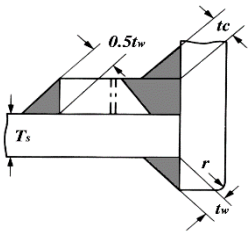	1. $t_c \geq 6.5$ or $0.7\ t_m$, whichever is the smaller 2. $t_1 + t_2 \geq 1.25 t_m$ 3. t_1 , $t_2 \geq \frac{1}{3} t_m$ but the minimum is 6.5 mm. 4. $t_w \geq 0.7 t_m$
	H-6	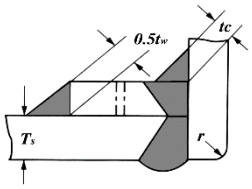	

Fig. V 2-1
Acceptable Forms of Welded Joints in Various Services(Continued)

Notes:

(1) The dimensions of welding parts are the minimum values.

(2) The unit of values in the figures is all in mm.

(3) The definitions of representative symbols used in the figures are as follows (unit: mm):

T_s : Actual thickness of the shell plate.
T_h : Actual thickness of the formed end plate.
T_E : Actual thickness of the flat end plate or cover plate.
T_{ro} : Required thickness of the seamless shell.
T_p : Actual thickness of the tube plate or flat end plate (formed end plate).
T_{rf} : Required thickness of furnace foundation ring plate.
T_k : Actual thickness of the stay tube or tube.
T_n : Actual thickness of the nozzle.
t_m : Smaller value of thickness of plates to be welded, but the maximum value is 20 mm.

Chapter 3
Strength Calculations

3.1 Shell, Drums or Headers

3.1.1 The minimum thickness of cylindrical shells, drums or headers subject to internal pressures is to be calculated by the following formula:

$$T = \frac{WRF}{SE - 0.5WF} + C$$

3.1.2 The minimum thickness of spherical shells subject to internal pressures is to be calculated by the following formula:

$$T = \frac{WRF}{2SE - WF} + C$$

3.1.3 The above formulae are only applicable where the resulting thickness does not exceed half the inside radius, i.e., where Ro is not greater than 1.5R. In the case of Ro exceeding 1.5R, it is to be submitted for special consideration.

3.1.4 Irrespective of the thickness determined by the above formulae, T is not to less than 6 mm for boilers and 5 mm for pressure vessels.

3.1.5 The notations used in 3.1.1 to 3.1.4 above are defined as follows:

T = Minimum thickness of plate, in mm.
W = Design pressure, in MPa.
S = Minimum tensed strength of the material of which the shell, drum or header is designed to be made, in N/mm^2.
E = Efficiency of longitudinal joint or of ligament between tube holes or other openings, whichever is the least, determined from Tables V 3-2A and V 3-2B.
R = Maximum inside radius of shell, drum or header, in mm.
C = Corrosion allowance as given in Table V 3-3, in mm.
R_0 = Maximum outside radius of shell, drum or header, in mm.
F = Constant as given in Table V 3-1.

3.2 End Plates without Stays or Other Supports

3.2.1 Flat end plates

The minimum thickness of unseated flat end plates is to be determined by the following formula:

$$T = K_1 d \sqrt{\frac{ZWF}{S}} + C$$

3.2.2 Dished end plates

The minimum thickness of dished end plates without manholes or other openings and having the pressure on the concave side is to be determined by the following formula:

$$T = \frac{K_2 W R_1 F}{2SE - 0.5WF} + C$$

3.2.3 Hemi-spherical end plates

The minimum thickness of hem-spherical end plates without stays or other supports and having the pressure on the concave side is to be determined by the following formula:

$$T = \frac{WR_1F}{2SE - 0.5WF} + C$$

3.2.4 Semi-ellipsoidal end plates

The minimum thickness of semi-ellipsoidal end plates without stays or other supports having the pressure on the concave side is to be determined by the following formula:

$$T = \frac{WdF}{2SE - 0.5WF} + C$$

3.2.5 The thickness of end plates except hemispherical type is not to be less than the required thickness of a seamless shell of the same diameter.

3.2.6 The minimum thickness of formed end plates subjected to pressure on their convex sides is to be determined by the same formulae as specified in 3.2.1 to 3.2.4 above, and the design pressure, W, in the formulae is to be substituted by 1.67 W.

3.2.7 The notations used in 3.2.1 to 3.2.4 above are defined as follows:

T = Minimum thickness of end plate, in mm.
W = Design pressure (See 1.1.4 of this Part), in MPa.
S = Minimum tensile strength of the material of which the end plate is designed to be made, in N/mm^2.
F = Constant as shown in Table V 3-1.
E = Minimum efficiency of joint determined from Table V 3-2.
d = Inside diameter (for circular end plates) or short span (for non-circular end plates), in mm.
d_1 = Long span of non-circular end plates measured perpendicular to short span, in mm.
Z = 1 for circular end plates, and $(3.4-2.4d/d_1)$ for non-circular end plates, but need not be over 2.56
R_1 = Inside radius of curvature of end plates as shown in Fig. V 3-1, in mm.
r = Inside radius of knuckle of end plates as shown in Fig. V 3-1, in mm.
C = Corrosion allowance as given in Table V 3-3, in mm.
K_1 = Constant as shown in Table V 3-4.
K_2 = Constant as shown in Table V 3-5.

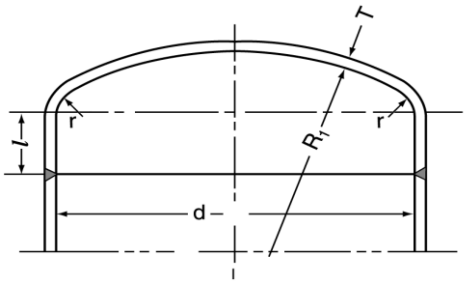

Fig. V 3-1
Dished End Plate

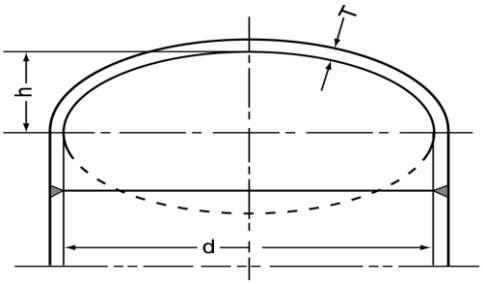

Note: The depth of the end plate, or 1/2 of the minor axis of the ellipsoidal, h, is to be at least equal to 1/4 of the inside diameter of the end plate, d.

Fig. V 3-2
Semi-ellipsoidal End Plate

Table V 3-1
Constant F for Seamless or Welded Construction

Material		Applicable For	See Note	Design Metal Temperature (℃) (1)											
Kind	Grade			250 or below	300	350	375	400	425	450	475	500	525	550	575
Rolled steel used at high Temperature	1-410	B.P		3.73	3.94	3.98	4.27	4.66	5.39	7.19	10.51				
	1-450			3.69	3.85	3.98	4.25	4.74	5.63	7.76	11.54				
	1-480			3.87	3.93	3.97	4.21	4.71	5.71	8.28	12.31				
	2-450			3.69	3.85	3.98	3.98	3.98	4.17	4.46	5.00	6.52	9.38		
	2-480			3.87	3.93	3.97	3.97	3.97	4.10	4.53	5.27	6.96	10.00		
Steel tubes for boiler and heat exchanger	T11	B.P	(2) (3)	3.72	3.81	3.95	4.10	4.32							
	T12			3.86	3.90	3.95	4.15	4.47	5.15	6.42					
	T13			3.63	3.94	3.98	4.23	4.66	5.39	7.19					
	T21			3.73	3.84	3.96	3.96	3.96	4.04	4.18	4.37	5.51			
	T22			3.87	3.94	3.98	3.98	3.98	4.02	4.18	4.46	5.06	6.41	9.32	
	T23			2.87	3.94	3.98	3.98	3.98	4.02	4.18	4.46	5.06	6.41	8.72	12.06
	T24			3.87	3.94	3.98	3.98	3.98	4.02	4.18	4.46	5.06	6.41	8.54	11.39
Steel castings		B, P	(5)	5.00											
Steel forgings		B, P		4.00											
Grey iron castings		P	(6)	8.00(where used at atmospheric temperature)											
Austenitic stainless steels		P		3.50 (where used at atmospheric temperature)											
Aluminum alloys		P		4.00(where used at atmospheric temperature)											
Rolled steel plates	Atmospheric temperature services	P		2.70											
	Low temperature services			3.00											
Steel pressure pipes		P See Table V3-10	(2) (4)												

Where:
B = Boilers
P = Pressure vessels

Notes:

(1) The value of F may be determined by interpolation at intermediate temperature.

(2) The value of F for electric resistance welded steel tubes and pipes is to be used with 118% of the tabulated value.

(3) Boiler tubes of electric resistance welded type are not to be used for boilers of which a design metal temperature exceeds 350°C, and a design pressure exceeds 2.0 MPa for Grade T 11 tubes and 3.0 MPa for Grades T12 and T13 tubes.

(4) Steel pressure pipes of electric resistance welded type are not to be used for pressure vessels of which a design metal temperature exceeds 150°C and a design pressure exceeds 2.0 MPa.

(5) Unless otherwise specially approved by the Society, steel castings of more than 50 mm in thickness are not to be used for the pressure parts of boilers and pressure vessels. Where steel castings are intended to be used for shells, drums and headers which are subjected to internal pressure, the following non-destructive examinations are to be performed.

(a) For boilers: Radiographic examination and magnetic particle detection.

(b) For Group I pressure vessels: Radiographic or ultrasonic examination together with magnetic particle or liquid penetrate detection.

(c) For Group II pressure vessels: A suitable non-destructive examination.

(6) Grey iron castings are not to be used for:

(a) Shells or mountings of pressure vessels intended for containing or carrying inflammable or dangerous substances, or

(b) Shells of pressure vessels intended for a design pressure exceeding 1.0 MPa.

Non-destructive examinations are to be performed for gray iron castings in accordance with Note 5(b) and 5(c) above.

(7) Constant F for other materials may be acceptable upon special consideration.

Table V 3-2A
Efficiency of Joints of Ligaments, E

<table>
<tr><th colspan="4">Description</th><th>E</th><th>Remarks</th></tr>
<tr><td colspan="4">Seamless shell. drum or header</td><td>1.00</td><td></td></tr>
<tr><td rowspan="13">Welded shell, Drum or header (Longitudinally)</td><td rowspan="2">Group I</td><td colspan="2">Where the joint is of double welded butt type and the reinforcement is removed flush</td><td>1.00</td><td rowspan="10">Requirements for full and spot radiographic examinations are specified in Part XII.</td></tr>
<tr><td colspan="2">Other</td><td>0.90</td></tr>
<tr><td rowspan="9">Group II And Group III</td><td rowspan="3">Where the joint is of a double welded butt type</td><td>Where full radio-graphic examination is performed</td><td>1.00</td></tr>
<tr><td>Where spot radio-graphic examination is performed</td><td>0.85</td></tr>
<tr><td>Where radiographic examination is not performed</td><td>0.75</td></tr>
<tr><td rowspan="3">Where the joint is of a single welded butt with backing strip type</td><td>Where full radio-graphic examination is performed</td><td>0.90</td></tr>
<tr><td>Where spot radio-graphic examination is performed</td><td>0.80</td></tr>
<tr><td>Where radiographic examination is not performed</td><td>0.70</td></tr>
<tr><td colspan="2">Where the joint is of a single welded butt without backing strip type and radiographic examination is not performed</td><td>0.60</td><td rowspan="3"></td></tr>
<tr><td colspan="2">Where the joint is of a full thickness both side fillet welded lap type and radiographic examination is not performed</td><td>0.55</td></tr>
<tr><td colspan="2">Where the electric resistance welded steel tube is used and radiographic examination is not performed</td><td>0.75</td></tr>
<tr><td>Ligaments between tube holes</td><td colspan="3">Efficiency of longitudinal, circumferential and diagonal ligaments between tube holes for that the applicable mode of arrangements</td><td>See Table V 3-2B</td><td>Each possible mode of arrangement is to be considered separately and the lowest value given by the application of that formula is to be used in strength calculations.</td></tr>
</table>

Note: Radiographic examination may be substituted by ultrasonic test if approved by the Society.

Table V 3-2B
Efficiency of Ligaments between Tube Holes, E

Description		Illustration	E	Remarks
Longitudinal ligament	Regular Spacing	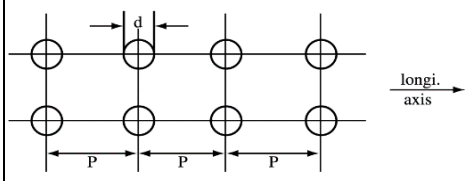	$\frac{P-d}{P}$	
	Irregular spacing	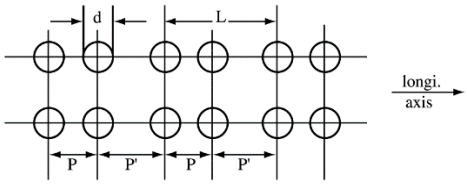 $(P' < 2P)$	$\frac{L-Nd}{L}$	
	Unsymmetrical spacing-irregular	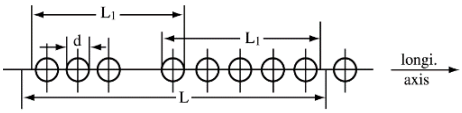	For L = 2R (1525 mm max.) $\frac{L-Nd}{L}$ or For L_1= R (762 mm max.) $\frac{L_1-Nd}{L_1} \times 1.25$ (Whichever is smaller)	
	Longitudinal holes not in a straight line	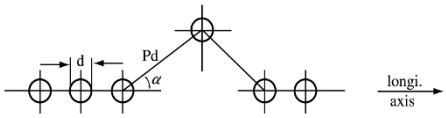	$L_{eq} = E_d P_d \cos\alpha$	(1)
Circumferential ligament	Regular spacing	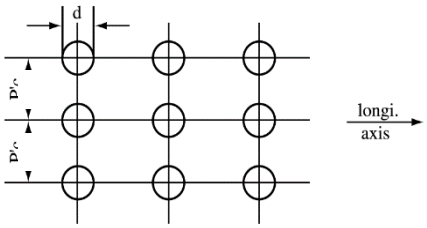	$2\frac{P_c-d}{P_c}$	(2)
	Irregular spacing	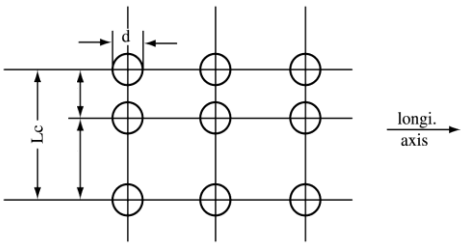	$2\frac{L_c-Nd}{L_c}$	

Table V 3-2B
Efficiency of Ligaments between Tube Holes, E (continued)

Description		Illustration	E	Remarks
Diagonal ligaments	Spacing of holes on a diagonal line	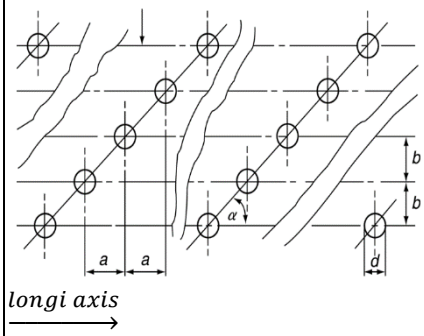	$\frac{2}{A+B+\sqrt{(A+B)^2+4C^2}}$ where: $A=\frac{\cos^2\alpha+1}{2\left(1-\frac{d\cos\alpha}{a}\right)}$ $B=0.5\left(1-\frac{d\cos\alpha}{a}\right)(\sin^2\alpha+1)$ $C=\frac{\sin\alpha\cos\alpha}{2\left(1-\frac{d\cos\alpha}{a}\right)}$ $\sin\alpha=\frac{1}{\sqrt{1+\frac{a^2}{b^2}}}$ $\cos\alpha=\frac{1}{\sqrt{1+\frac{b^2}{a^2}}}$ α = angle between centerline of longitudinal axis and centerline of diagonal holes.	The efficiency of ligaments (longitudinal and diagonal) are to be calculated and the lowest value of them is to be used for the strength calculation
	Regular saw-tooth pattern of holes	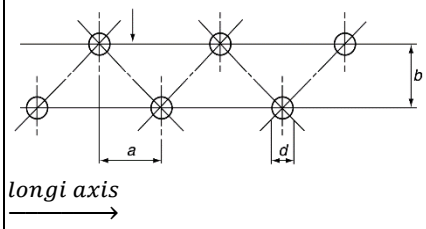		
	Regular staggering of holes	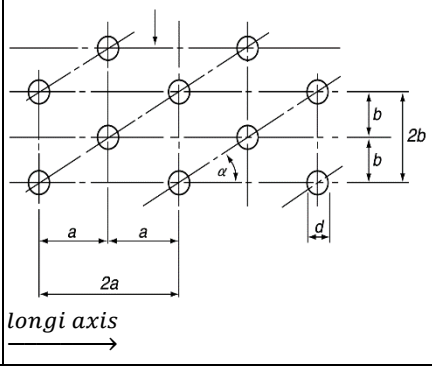		The efficiency of all ligaments (longitudinal, circumferential and diagonal) is to be calculated and the lowest value of them is to be used for the strength calculation.

Where:

P and P' = Pitch of holes measured along longitudinal axis, in mm.

P_c and P'_c = Pitch of hole measured circumferentially in mm.

P_d = Diagonal pitch of holes, in mm.

d = Diameter of holes, in mm.

R = Inside radius of shell, in mm.

L and L_1 = Length measured longitudinally for obtaining the average efficiency, in mm.

L_c = Length measured circumferentially for obtaining the average efficiency, in mm.

N = Total number of holes included in the length considered, L, L_1 or Lc.

L_{eq} = Equivalent longitudinal width of diagonal ligament, in mm.

E_d = Efficiency of diagonal ligament.

Notes:

(1) The preceding manners for calculating efficiency are to be applied, except that the equivalent longitudinal width, L_{eq} of a diagonal ligament is to be used.

(2) P_c and P'_c are to be measured either on the flat plate before rolling or along the median line of plate thickness after rolling.

(3) If in a row of holes, there are holes of different diameter, the efficiency is to be obtained by using d = $0.5(d_1+d_2)$, where d_1 and d_2 are the diameters of the largest adjacent holes.

Table V 3-3
Corrosion Allowance, C

Materials	C (mm)
Rolled steel plates for boilers or pressure vessels	1
Seamless forged drums or headers	
Forged steel	
Steel pipes	
Cast steel and gray cast iron	0

Notes:

(1) Where the plate having tolerance exceeding -0.25 mm is used, the above tabulated value C is to be increased by adding (-) tolerance.

(2) Value C for other materials may be acceptable upon special consideration.

3.3 Stayed Surfaces

3.3.1 Flat surfaces except tube nests supported by stays other than tube plates of combustion chamber

The minimum thickness of flat surfaces supported by regularly pitched stays or stay tubes is to be determined by the following formula:

$$T = K_3\sqrt{\frac{WF(P_1^2 + P_2^2)}{S}} + 1$$

3.3.2 Tube plates of combustion chamber

The minimum thickness of tube plates of combustion chamber or tube plates under compression is to be determined by the following formula:

$$T = \frac{WLP}{183(P - d)}$$

3.3.3 Flat tube plate within tube nests

The minimum thickness of tube plates supported by stay tubes within tube nests is to be determined by the following formula:

$$T = K_4 P_m\sqrt{\frac{WF}{S}} + 1$$

3.3.4 In applying the above requirement, where the points of support are irregularly pitched or the plate is reinforced by flanging, the following provisions are to be taken into account.

(a) Flanged flat plates may be considered as stayed plates by regarding the commencement of curvature as point of support. In this case the inner radius of the curvature is greater than 2.5 times of the plate, the points located at a distance of 3.5 times the thickness of the plate from the outer surface of the flange may be considered as a commencement of the curvature. In this case, the value of constant K_3 is to be 0.36 where plates are not exposed to flame or 0.39 where plates are exposed to flame.

(b) Where flat plates are directly attached to shells or furnaces without flanging, the inside of plain ends welded on shells or furnaces is to be regarded as points of support. In this case, the value of constant K_3 is to be 0.43 where plates are not exposed to flame or 0.47 where plates are exposed to flame.

(c) In 3.3.1 above, the portion of flat surfaces are supported by irregularly pitched stays or stay tubes, C^2 is to be used instead of $P_1^2+P_2^2$. "C" is the diameter of the largest circle, which can be drawn passing through not less than 3 points of support, and has not any support within the circle.

3.3.5 The notations used in 3.3.1 to 3.3.4 above are defined as follows:

T = Minimum thickness of stayed flat surface or tube plate, in mm.

W = Design pressure, in MPa.

S = Minimum tensile strength of plate of which the stayed flat surface or tube plate is designed to be made, in N/mm^2.

F = Constant as given in Table V 3-1.

P_1 = Horizontal pitch of stays or stay tubes, in mm.

P_2 = Vertical pitch of stays or stay tubes, in mm.

P = Pitch of tubes, measured horizontally where tubes are chain pitched, or diagonally where tubes are staggered pitched and the diagonal pitch is less than the horizontal pitch, in mm.

d = Inside diameter of plain tubes, in mm.

L = Internal width of the combustion chamber measured from tube plate to back chamber plate, in mm.

P_m = Mean pitch of stay tubes supporting any positions of tube plates, being the sum of 4 sides of any quadrilateral divided by 4, in mm.

K_3 = Constant as given in Table V 3-6.

K_4 = Constant as given in Table V 3-7.

3.4 Compensation of Openings

3.4.1 Openings exempted from compensation

No compensation is required for the following openings in shells, end plates or headers.

(a) Openings of a definite pattern, such as tube holes may be designed in accordance with the requirements specified in Table V 3-2B of this Part, provided the largest hole in the group does not exceed that permitted by the following formula:

$$d_m = 8\sqrt[3]{D_o T_a (1 - M)}$$

Notes:

(1) For ellipsoidal or oval holes, d_m refers to the mean of the major and minor axis when the minor axis lies longitudinally or to the major axis when this lies longitudinally.

(2) No uncompensated opening is to exceeding 200 mm in diameter.

(3) When the product D_o T_a exceeds 129,000, using 129,000 in the formula.

Table V 3-4
Constant K_1 for Flat End Plates

Fig. V 2-1	K_1		Description
	Circular	Non-circular	
B-1	0.50	0.50	In case L is not restricted, R $\geq 3\ T_E$
	0.39	—	In case $L \geq (1.1 - 0.8 \times \frac{T_S^2}{T_E^2}\sqrt{dT_E})$
B-2	0.50	0.50	
B-3	0.70	0.70	
B-4 to B-8	0.55	0.70	
B-9	0.55	—	
B-10	0.70	0.70	
—	0.55	0.55	Flat end plate bolted to shell, flange or side plate. 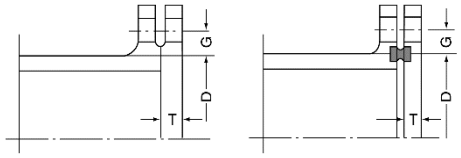
—	0.50	0.50	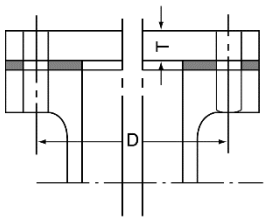 Flat end plate bolted with a full-face gasket to shell, flange or side plate.

Table V 3-5
Constant K_2 for Dished End Plates

r/R_1	0.06	0.07	0.08	0.09	0.10	0.12	0.14
K_2	1.77	1.69	1.63	1.58	1.54	1.47	1.42
r/R_1	0.16	0.18	0.20	0.22	0.24	0.26	0.28
K_2	1.38	1.34	1.31	1.28	1.26	1.24	1.22

Notes:

(1) The inside radius of curvature of end plates, R_1 is to be less than the outside diameter of the shell.

(2) The inside radius of knuckle of end plates, r is not to be less than 3 times the thickness of end plates nor less than 0.06 times the inside diameter of the shell.

(3) The cylindrical part of dished end plates, *l*, is not to be less than twice the end plate thickness, T, but need not be over 38 mm.

(4) The value K_2 may be determined by interpolation at intermediate ratio of r/R_1.

Table V 3-6
Constant K_3 for Stayed Flat Surfaces

Way of Fixing Stay or Stay Tube in Fig. V 2-1		K_3	
		Where the plates are not exposed to flame	Where the plates are exposed to flame
In case the fixing stay are inserted into the plate	E-1	0.35	0.38
	E-2	0.37	0.40
	E-3	0.41	0.44
	E-4	0.50	0.53
In case the stay tube are inserted into the plate	F-1	0.42	0.45
	F-2	0.49	0.52
	F-3	0.49	0.52

Table V 3-7
Constant K_4 for Flat Tube Plates within Tube Nests

In case the stay tubes are inserted into the plate in Fig. V 2-1	K_4	
	In case the plates are not exposed to flame	In case the plates are exposed to flame
F-1	0.51	0.54
F-2	0.57	0.61
F-3	0.57	0.61

3.4.2 Area requirement for compensation

The opening compensation is to be provided in amount and distribution such that the area requirement for compensation area satisfied for all planes through the center of the opening and normal to the vessel surface. The total cross-sectional area of compensation in any given plane is to be not less than that given by the following formula:

(a) For shells and formed end plates

$$A = d_s T_s$$

(b) For flat end plates having an opening with a diameter not exceeding 1/2 of the diameter for the circular plates or the shortest span for the non-circular plates

$$A = 0.5 d_s T_s$$

(c) As an alternative the thickness of flat end plates may be increased to provide the necessary compensation by using $1.41K_1$ in the formula for calculating end plate thickness given in 3.2.1 of this Part provided the flat end plate having an opening with a diameter that does not exceed half of the end plate diameter. The value of $1.41K_1$ to be used in the formula need not exceed 0.87. Where flat end plates have an opening with a diameter exceed half of the diameter for the circular plates or of the shortest span for non-circular plates, the thickness of flat end plates are to be calculated by using $1.5K_1$ in the preceding formula to increase the thickness of end plates.

3.4.3 Compensation limits

(a) Limits along wall

The limits of compensation, measured along the vessel wall, are to be at a distance on each side of the axis of the opening equal to the greater of the following:

(i) The diameter of the finished opening.

(ii) The radius of the finished opening plus the thickness of the vessel wall, plus the thickness of the nozzle wall.

(b) Limits normal to wall

The limits of compensation, measured normal to the vessel wall, are to be conformed to the contour of the surface at a distance from each surface equal to the smaller of the following:

(i) 2.5 times the shell thickness.

(ii) 2.5 times the nozzle wall thickness, plus the thickness of any added compensation exclusive of the weld metal on the side of the shell under consideration.

3.4.4 Metal having compensation value

(a) Compensation available in vessel wall

The metal in the vessel wall over and above the thickness required resisting pressure and exclusive of the corrosion allowance may be considered as compensation within the compensation limits given in 3.4.3(a) above. The area of vessel wall available as compensation is the greater of the values A_1 given by the following formulae:

$$A_1 = (E\,T_a - T_s)\,d$$
$$A_1 = 2\,(E\,T_a - T_s)\,(T_a + T_n)$$

(b) Compensation available in nozzles

The thickness over and above the thickness required to resist pressure, and exclusive of the corrosion allowance in that part of a nozzle wall extending outside the vessel wall, may be considered as compensation within the compensation limits given 3.4.3(b) above. The maximum area on the nozzle wall available as compensation is the smaller of the values A_2 given by the following formulae:

$$A_2 = 5(T_n - T_{ns})\,T_a$$
$$A_2 = (T_n - T_{ns})\,(5T_n + 2T_c)$$

All metal in the nozzle wall extending inside the vessel wall and within the compensation limits given in 3.4.3(b) above may be included in compensation.

(c) Added compensation

Metal added as compensation and metal in attachment welds may be considered as compensation within the compensation limits in 3.4.3 above.

3.4.5 Material strength of compensation

In general material used for compensation is to have a tensile strength equal to or greater than that of the material in the vessel wall, but where material of lower strength is used, the area of compensation is to be increased to compensate for lower strength. No credit is to be taken for the additional strength of any compensation having a higher tensile strength than the vessel wall. Deposited weld metal used as compensation is to be credited with a strength equivalent to the weaker of the materials connected by the weld.

3.4.6 Compensation of multiple openings

(a) Spacing of openings

Two adjacent openings are to have a distance between centers not less than 1.33 times their average diameter.

(b) Compensation overlapping

When adjacent openings are so spaced that their limits of compensation overlap, the opening is to be compensated in accordance with 3.4.2 above with a compensation that has an area equal to the combined area of the compensation required for the separate openings. No portion of the cross section is to be considered as applying to more than one opening or be evaluated more than once in a combined area.

3.4.7 Flanged opening

The opening in the end plate may be compensated by flanged-in. In this case, the depth of the flange is not to be less than the value calculated by the following formula:

(a) Where the thickness of the plate is not greater than 38 mm:

H= 3 Ts

(b) Where the thickness of the plate is greater than 38 mm:

H= Ts + 76

3.4.8 The notations used in 3.4 of this Part are defined as follows:

d_m = Maximum allowable diameter of opening without compensation, in mm.
D_o = Outside diameter of shell, in mm.
T_a = Actual thickness of vessel wall, in mm.
M = $\frac{WD_oF}{1.82ST_a}$, but not more than 0.99
W = Design pressure, in MPa.
S = Minimum tensile strength of the material of which the shell, end plate or header is designed to be made, in N/mm^2.
F = Constant as given in Table V 3-1.
A = Minimum required area for compensation, in mm^2.
d_s = Maximum diameter of finished opening in the longitudinal cross section for shell or in the cross section for end plate, in mm.
d = Diameter of finished opening in a given plane, in mm.
T_s = Required thickness omitting the corrosion allowance C of a seamless shell, header or end plate without opening, in mm.
Except that:
for the dished or hem-spherical end plate when the opening and its compensation are entirely within the spherical portion, T_s is the thickness required by the formula given in 3.2.3 of this Part using E = 1 and C = 0, and for semi-ellipsoidal end plate when the opening and its compensation are located entirely within a circle the center of which coincides with the center of the end plate and the diameter of which is 0.8 times of the shell inside diameter, T_s is thickness required by the formula given in 3.2.3 of this part using E = 1, C = 0 and R = 0.9 of the inside diameter of the shell.
A_1 = Area in excess thickness in the wall of shell or end plate available for compensation, in mm^2.
A_2 = Area in excess thickness in the nozzle wall available for compensation, in mm^2.
E = Joint efficiency
= 1, when an opening is in the plate or when the opening passes through a circumferential joint in a shell (exclusive of end plate to shell joints), or
= the longitudinal joint efficiency, when any part of the opening passes through any other welded joint.
T_n = Actual thickness of nozzle wall, in mm.
T_{ns} = Required thickness of a seamless nozzle wall determined by the same formula used for the shell in 3.1.1 of this Part omitting the corrosion allowance C, in mm.
T_c = Thickness of added compensation, in mm.
C = Corrosion allowance as given in Table V 3-3, in mm.
H = Total depth of flange, in mm.

3.5 Stay, Girders and Stay Tubes

3.5.1 Longitudinal Stays

The minimum diameter of longitudinal stay is to be determined by the following formula:

$$d = 1.3\sqrt{WA} + 3$$

3.5.2 Diagonal stays

The minimum diameter of diagonal stays in to be calculated by the following formula.

$$d = 1.3\sqrt{\frac{L}{H}(WA)} + 3$$

3.5.3 Girders

The minimum thickness of steel girders supporting top plate of combustion chamber is to be determined by the following formula:

$$T = \frac{100K_5WL_1P(L_1 - P_1)}{H_1^2S}$$

3.5.4 Stay tubes

The minimum net sectional area of stay tubes is to be determined by the following formula, but in no case less than 6mm in thickness for stay tubes in bounding raw of tube nests, nor less than 4.5 mm for other stay tubes:

$$a = 1.93WA$$

3.5.5 The notations used in 3.5 of this Part are defined as follows:

d = Minimum diameter of stay, in mm.
a = Minimum net sectional area of one stay tube, mm^2.
W = Design pressure, in MPa.
A = Net area supported by one stay, in cm^2.
S = Minimum tensile strength of the material of which the stay is designed to be made, in N/mm^2.
L = Length of diagonal stay, in mm.
H = Equivalent length of stays perpendicular to the support surface, in mm.
H_1 = Depth of girders at center supporting the top of combustion chamber, in mm.
P = Pitch between girders from center to center, in mm.
L_1 = Width of combustion chamber measured along inner upper part, in mm.
P_1 = Pitch of stays supporting girder, in mm.
K_5 = Constant as given in Table V 3-8.

Table V 3-8
Constant K_5 for Girders

Description	K_5
When number of stays (n) in each girder is odd	$\frac{0.04(n+1)}{n}$
When number of stays (n) in each girder is even	$\frac{0.04(n+2)}{n+1}$

3.6 Furnaces and Flues

3.6.1 The minimum thickness of plates for furnaces subject to external pressure is to be determined by the following formulae, but in no case is the thickness of plain or corrugated furnaces to be more than 22.5 mm, nor less than 8.0 mm.

3.6.2 Corrugate furnaces

The minimum thickness of plates for corrugated furnaces is to be determined by the following formula:

$$T = \frac{WD}{K_6} + 1$$

3.6.3 Plain furnaces, flue sections and combustion chamber bottoms

The minimum thickness between points of substantial support, of plain furnaces or furnaces strengthened by stiffening rings, of flue sections and of the cylindrical bottoms of combustion chambers is to be determined by the following formulae whichever gives the greater thickness:

$$T = \sqrt{\frac{WD(L + 610)}{10500}} + 1$$

$$T = \frac{WD}{112} + \frac{L}{325} + 1$$

3.6.4 Plain furnaces of vertical boiler

(a) The minimum thickness of plain furnaces not exceeding 2000 mm in external diameter is to be determined by the formulae in 3.6.3 above, applying the following notations, whichever gives the greater thickness:

D = External diameter of the furnaces. Where the furnace is tapered, the diameter to be taken for calculation purpose is to be the mean of that at top and that at bottom where it meets the substantial support from flange, ring or row of stays, in mm.

L = Distance between the center of the joint connecting the crown to the body of the furnace and the substantial supports at the bottom of the furnace, in mm.

Others are as defined in 3.6.8 of this Part.

(b) A circumferential row of stays connecting the furnace to the shell will be considered to provide substantial support to the furnace, provide that:

(i) The diameter of the stay is not less than 22.5 mm or twice the thickness of furnace plate, whichever is the greater.

(ii) The pitch of the stays at the furnace does not exceed 14 times the thickness of furnace plate.

3.6.5 Hemi-spherical furnaces

The minimum thickness of plates for furnaces hemi-spherical in form and convex upward at the top without support is to be determined by the following formula:

$$T = \frac{WR}{61.5} + 1$$

3.6.6 Ogee rings

The minimum thickness of plates for ogee rings connecting the furnace bottom to the shell of a vertical boiler and sustaining the whole vertical load on the furnace is to be determined by the following formula:

$$T = \sqrt{\frac{WD_s(D_s - d)}{1010}} + 1$$

3.6.7 Uptakes of vertical boilers

The minimum thickness of plates for internal uptakes of vertical boilers is to be determined by the following formulae; whichever gives the greater thickness:

$$T = \sqrt{\frac{WD_u(L + 610)}{10500}} + 4$$

$$T = \frac{WD_u}{112} + \frac{L}{325} + 4$$

3.6.8 The notations used in 3.6 of this Part are defined as follows:

T = Minimum thickness of furnace, flue section, combustion chamber bottom, ogee rings and uptake, in mm.
W = Design pressure, in MPa.
D = External diameter of furnace, flue section or combustion chamber bottom, in the case of plain furnace of vertical boiler, see 3.6.4 above, in mm.
L = Length of section between the centers of points of substantial support, in the case of plain furnace of vertical boiler, see 3.6.4 above, in mm.
D_u = External diameter of uptake, in mm.
D_s = Inside diameter of boiler shell, in mm.
d = Outside diameter of the lower part of the furnace where it joints the ogee ring, in mm.
R = Outer radius of curvature of the furnace, in mm.
K_6 = Constant
114 for Leeds forge bulb furnace, and
107 for Morrison, Leighton and similar furnace.

3.7 Rectangular Section Headers

3.7.1 Flat wall thickness

(a) The flat wall thickness required is to be calculated for the center of the side, for the ligaments between the openings and for the corners. The greater resulting value is to apply to the wall thickness of the entire rectangular header.

(b) The minimum wall thickness of rectangular section header is to be determined by the following formula:

$$T = \frac{WAF}{2SE} + \sqrt{\frac{4K_7WF}{SE_1}} + 1$$

(c) Where there are several rows of openings of different sizes, the wall thickness required is to be calculated for each row.

(d) Where header surfaces is machined locally at hand holes the total thickness may be reduced by a maximum of 2 mm, but not less than 8 mm.

3.7.2 Value of K_7

The coefficient K_7 for use in 3.7.1 above is determined as follows:

(a) At the center of the side with internal width, 2B:

$$K_7 = \frac{1}{3}\left(\frac{A^3 + B^3}{A + B}\right) - \frac{1}{2}B^2$$

(b) At a line of openings parallel to the longitudinal axis of the header on the wall of width, 2B:

$$K_7 = \frac{1}{3}\left(\frac{A^3 + B^3}{A + B}\right) - \frac{1}{2}(B^2 - e^2)$$

(c) To check the effect of the offset on a staggered opening arrangement where the openings are positioned equidistant from the centerline of the wall.

$$K_7 = \left[\frac{1}{3}\left(\frac{A^3 + B^3}{A + B}\right) - \frac{1}{2}B^2\right]\cos\alpha$$

(d) At the corners:

$$K_7 = \frac{1}{3}\left(\frac{A^3 + B^3}{A + B}\right)$$

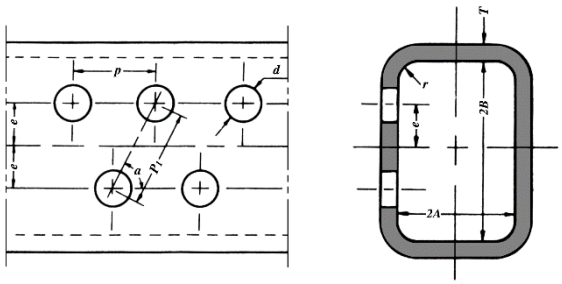

Fig. V 3-3
Rectangular Section Header

3.7.3 The ligament efficient E and E_1 are to be determined as follows:

(a) For a line of openings parallel to the longitudinal axis of the header:

$$E = \frac{P - d}{P}$$

(b) For the diagonals:

$$E = \frac{P_1 - d}{P_1}$$

(c) For a line of openings parallel to the longitudinal axis of the header:

$$E_1 = \frac{P - d}{P} \qquad \text{When } d < 0.6B$$

or

$$E_1 = \frac{P - 0.6B}{P} \qquad \text{When } d \geq 0.6B$$

(d) For the diagonals:

$$E_1 = \frac{P_1 - d}{P_1} \qquad \text{When } d < 0.6B$$

or

$$E_1 = \frac{P_1 - 0.6B}{P_1} \qquad \text{When } d \geq 0.6B$$

(e) In the case of elliptical openings the value of d to be used in the formulae for E and E_1 is to be the inside dimension of the openings measured parallel to the longitudinal axis of the header. For evaluating the two limiting values of d in the equations for E_1, the value of d is to be the inside dimension of the opening measured perpendicular to the longitudinal axis of the header.

3.7.4 For corners and inspection openings the following is to be satisfied:

$r \geq \frac{1}{3}T_1$, but at least 8 mm.

3.7.5 Header ends

(a) The shape and thickness of ends forged integrally with the body of header are to be the subject of special consideration.

(b) Flat and dished ends are to be in accordance with the requirements of 3.2.1 and 3.2.2 of this Part respectively.

3.7.6 The notations used in 3.7 of this Part are defined as follows:

T = Wall thickness of rectangular section header, in mm.
W = Design pressure, in MPa.
S = Minimum tensile strength of the material of which the rectangular section header is designed to be made, in N/mm^2.
E = Ligament efficiency for tensile stresses determined in accordance with 3.7.3 of this Part.
E_1 = Ligament efficiency for bending stresses determine in accordance with 3.7.3 of this Part.
F = Constant as given in Table V 3-1.
A = One half of the internal width of the wall perpendicular to that under consideration, in mm, refer to Fig. V 3-3.
B = One half of the internal width of the wall under consideration, in mm, refer to Fig. V 3-3.
K_7 = A coefficient determined in accordance with 3.7.2 above. In all cases if the value of K_7 is negative, the sign is to be ignored.
e = Distance from the center of the openings to the center line of the wall, in mm, refer to Fig. V 3-3.
P = Pitch of openings, in mm, refer to Fig. V 3-3.
P_1 = Diagonal pitch of the openings, in mm, refer to Fig. V 3-3.
α = Angle as indicated in Fig. V 3-3.
d = Diameter of the openings, in mm, refer to Fig. V 3-3.
r = Fillet radius in the corners, in mm, refer to Fig. V 3-3.
T_1 = The mean of the nominal wall thickness of rectangular section header of the 2 sides, in mm.

3.8 Tubes

3.8.1 Tubes subject to internal pressure

(a) The minimum wall thickness of straight tubes subject to internal pressure is to be determined by the following formula:

$$T = \frac{Wd_0F}{2SE + WF} + 0.005d_0 + C_1$$

(b) The nominal thickness of tubes is in no case to be less than the minimum thickness as shown in Table V 3-9.

Table V 3-9
Minimum Thickness of Tubes

Nominal Outside Diameter of Tube d_0 (mm)	Minimum Thickness(mm)
$d_0 \le 38$	1.75
$38 < d_0 \le 50$	2.16
$50 < d_0 \le 70$	2.40
$70 < d_0 \le 75$	2.67
$75 < d_0 \le 95$	3.05
$95 < d_0 \le 100$	3.28
$100 < d_0 \le 125$	3.50

3.8.2 Tubes Subject to external pressure

The minimum thickness of plain smoke tubes, other than stay tubes, subject to external pressure is to be determined by the following formula:

$$T = 0.01458\ Wd_0 + 2$$

3.8.3 Down-comer tubes and pipes

The minimum thickness of down-comer tubes and pipes forming an integral part of the boiler and not exposed to combustion gases is to comply with the requirements for steam pipes in Part VI.

3.8.4 Stand pipes or branches

(a) Where stand pipes or branches are welded to boiler drums or headers and subject to internal pressure, the wall thickness of the pipe is not to be less than that either determined by the following formula or by 3.8.1(a) above:

$$T = \frac{d_0}{25} + 2.5$$

However, in no case need the wall thickness exceed the minimum thickness of shell, drum or header as required by 3.1 of this Part.

(b) The wall thickness of standpipes or branches weld to pressure vessel is to comply with the requirements in 3.8.4(a) above.

(c) Where a standpipe or branch is connected by screwing, the thickness is to be measured at the root of the thread. The wall thickness of stands pipes or branches are to be complying with the requirements in 3.8.4(a) above.

3.8.5 Cross tubes in vertical boiler

For vertical boilers with cross tubes passing through the firebox shell, the minimum thickness of cross tubes is to be determined by the following formula, but in no case less than 9.5 mm:

$$T = \frac{WD_t}{44} + 6.5$$

3.8.6 Tubes within heat exchanger

The minimum thickness of straight tubes within heat exchanger is to be determined by the following formula:

$$T = \frac{Wd_0F}{2SE} + C$$

3.8.7 Additional allowance

The thickness calculated by the formulae in 3.8.1 to 3.8.6 above is a minimum value of straight tubes and additional allowance is to be made with reference to the minus tolerances in thickness caused in the process of manufacture where necessary and also in case where abnormal corrosion or erosion is expected in service.

3.8.8 Tube bending

(a) Where boiler, super-heater, reheater and economizer tubes are bent, the resulting thickness of the tubes at the thinnest part is to be not less than that required for straight tubes, unless it can be demonstrated that the method of forming the bend results in no decrease in strength at the bend. The manufacturer is to demonstrate in connection with any new method of tube bending that this condition is satisfied.

(b) Tube bending, and subsequent heat treatment, where necessary, is to be carried out as to ensure that residual stresses do not adversely affect the strength of the tube for the design purpose intended.

3.8.9 The notation used in 3.8 of this Part are defined as follows:

T = Minimum thickness of tube or pipe, in mm.
W = Design pressure, in MPa.
d_0 = Outside diameter of tube, in mm.
D_t = Internal diameter of cross tube, in mm, but not to exceed 300 mm.
S = Minimum tensile strength of the material of which the tube is designed to be made, in N/mm^2.
E = 1.0 for seamless tubes, and
= 0.85 for electric resistance welded tubes.
F = Constant as shown in Table V 3-1 for 3.8.1 above, and in Table V 3-10 and V 3-11 for 3.8.6 above.
C_1 = 1.0 mm for tubes expanded into tube seats.
= 0 for tubes strength-welded to headers and drums.
C = 1.0 mm for carbon and low alloy steels
= 0.3 mm for copper and copper alloys.
= 0 for stainless austenitic steels.

Table V 3-10
Constant F for Tubes within Heat Exchanger

Kind of Material		Design Temperature (°C)										
Grade	Min T. S. (N/mm^2)	Up to 50	75	100	125	150	175	200	225	250	275	300
Seamless copper tubes (phosphorous-oxidized)	205	4.77	5.86	6.21	6.21	6.41	7.59	10.25	—	—	—	—
Seamless brass tubes	315	4.63	4.63	4.63	4.63	4.63	4.70	13.13	—	—	—	—
	355	4.33	4.38	4.38	4.44	4.44	7.89	16.15	—	—	—	—
Seamless copper-nickel tubes	275	4.04	4.04	4.04	4.37	4.51	4.66	4.77	5.00	5.09	5.73	6.71
	315	4.32	4.38	4.38	4.44	4.50	4.50	4.70	4.85	5.00	5.25	5.53
	365	4.51	4.63	4.74	4.87	4.93	5.07	5.21	5.29	5.45	5.53	5.62
Steel pipes	See Part XI	See Table V 3-11										

Notes:
(1) Value F may be determined by interpolation at intermediate temperature.
(2) Constant F for other materials may be acceptable upon special consideration.

Table V 3-11
Constant F for Steel Pipes

Material			Design Temperature (℃)													
Kind	Grade	Min T.S. (N/mm^2)	Up to 100	150	200	250	300	350	375	400	425	450	475	500	525	550
Carbon steel pipes	P11	370	3.01	3.25	3.52	3.85	4.25	4.74	—	—	—	—	—	—	—	—
	P12	410	2.97	3.20	3.47	3.83	4.27	4.56								
	P13	480	3.08	3.31	3.61	3.93	4.10	4.25								
Low alloy steel pipes	P21	380	3.19	3.39	3.62	3.92	4.27	4.47	4.58	4.75	4.94	5.21	5.43	5.85	—	—
	P22	410	3.39	3.53	3.69	3.90	4.14	4.41	4.51	4.61	4.82	5.13	5.39	5.77	7.45	10.79
	P23	410	3.39	3.53	3.69	3.90	4.14	4.41	4.51	4.61	4.82	5.13	5.39	5.77	7.32	10.25
	P24	410	3.39	3.53	3.69	3.90	4.14	4.41	4.51	4.61	4.82	5.13	5.39	5.77	7.32	10.00

Notes:

(1) Value F may be determined by interpolation at intermediate temperature.

(2) Constant F for other materials may be acceptable upon special consideration.

Chapter 4
Mountings for Boilers and Pressure Vessels

4.1 General Requirements for Boiler Mountings

4.1.1 Material

(a) Nozzles, flanges or distance pieces connected to the boiler shell or end plate (including tube headers) are to be made of steel, which is suitable for the working temperatures.

(b) All valve chests and other fittings connected to the boiler and subjected to its steam pressure are to be suitable for the working temperature and be of steel excluding the following:

(i) The copper alloy castings may be used in cases where the maximum working temperature does not exceeding 210°C.

(ii) The gray cast iron may be used in cases where the maximum working temperature does not exceed 220°C nor the approved design pressure exceed 1 MPa, except for blow-off valves.

(iii) Special cast iron made by the approved manufacturers may be used in cases where the maximum working temperature does not exceed 350°C nor the approved design pressure exceed 2.5 MPa.

4.1.2 Construction of boiler mountings

(a) Mountings such as valves, flanges, and bolts, nuts, gaskets, etc, are to have the construction and dimensions conforming to the recognized standards and they are to conform to the service conditions specified in such standards.

(b) The manual stop valve is to be provided with an indicator to show whether it is open or closed, except for that of rising stem type.

(c) All boiler mountings are to be connected to the boiler drum welded or flanged joints. However, in case where the thickness of the drum is over 12 mm or in case where a seat for screwing is fitted to the drum, the mountings of 32 mm or under in nominal diameter may be attached to the boiler by screwing.

(d) In case where boiler mountings are secured by studs, the stud holes are not to penetrate the whole thickness of the shell, and the depth of threaded part is not to be less than the diameter of the studs.

4.2 Boiler Safety Valves

4.2.1 Number, location and size of boiler safety valves

(a) Each Boiler is to be fitted with not less than 2 safety valves, each for propulsion boiler with super heaters used to generate steam for main propulsion and other machinery having a minimum internal diameter of 38 mm, but those having a total heating surface of less than 50 m^2 may have a single safety valve (for ordinary type safety valve, the inside diameter of the valve seat is not to be less than 50 mm). For auxiliary boilers and exhaust gas economizers, the inlet diameter of the safety valve must not be less than 19 mm. For the full lift safety valve a smaller diameter may be allowed upon special approval.

(b) In case where a superheated forms an integral part of a boiler, at least one separate safety valve of suitable size is to be fitted on the superheated outlet. Where it is impracticable to attach safety valves directly to the superheated, the valves are to be located as near as possible thereto and fitted to a branch piece connected to the superheated outlet pipe.

(c) At least one safety valve is to be fitted on the inlet and the outlet of independent re-heaters or independent super-heaters respectively.

4.2.2 Relieving capacity

(a) Safety valves are to be of equal size as far as practicable and their aggregate relieving capacity is not to be less than the evaporating capacity of the boiler under maximum operating condition.

(b) The minimum aggregate area of the orifices through the seating of the safety valves (for full lift valves, the net area through seats after deducting the guides and other obstructions, when the valves are fully lifted) on each boiler is to be determined by the following formulae:

(i) For saturated steam:

$$A = \frac{K_8 HV}{10P + 1}$$

(ii) For superheated steam:

$$A_s = A(1 + 0.0018T)$$

(c) The notations used in 4.2.2 (b) above are defined as follows:

A and A_s	=	Minimum aggregated area of orifices through the seating of safety valves.
P	=	Setting pressure of safety valves, in MPa.
H	=	Total heating surface of boiler excluding the heating surface of super-heater, in m^2.
V	=	Designed evaporation, in kg/m^2 hr.
T	=	Difference between the temperature of superheated and saturated steam, in °C.
K_8	=	Constant,
	=	21 for valves of the ordinary type having a minimum lift of D/24,
	=	14 for valves of high lift type having a minimum lift of D/16,
	=	10.5 for valves of improved high lift type having a minimum lift of D/12, and
	=	5.25 after special approved for valves of full lift type having a minimum lift of D/4.
D	=	Internal diameter of the valve seat, in mm.

(d) If a discharge capacity test, carried out in presence of the Surveyor, proves that the capacity exceeds that indicated by the constant K_8, consideration will be given to use of a lower value of K_8 based on up to 90% of the measured capacity.

(e) Notwithstanding the requirement in 4.2.2 (b) above, the safety valves fitted to any boiler (and integral super-heater) are to be capable of discharging all the steam which can be generated without causing a pressure rise of more than 10% in excess of the design pressure.

(f) Boiler and superheated safety valves are to be so disposed and proportioned between saturated steam drum and super-heater outlet that when relieving, sufficient steam will be forced through the super-heater to prevent the heater from overheating under all service conditions including an emergency stop of the main steam supply while the boiler is continuously operated in full firing condition.

(g) Where the super-heater forms an integral part of the boiler with no isolating means between the super-heater and the boiler, the relieving capacity of the super-heater safety valve, based on the reduced pressure at the super-heater outlet, may be included as part of the total relieving capacity required for the boiler, but the relieving capacity of the super-heater safety valve is not to be credited for more than 25% of the total capacity required for the boiler.

4.2.3 Construction

The construction of safety valves is to be in compliance with the following requirements:

(a) The valves, spindles, springs and compression screws are to be so encased and locked or sealed that the safety valves and pilot valves, after setting to the working pressure, cannot be tampered with or overloaded in service. The valves are to be so designed that in the event of fracture of springs they cannot lift out of their seats.

(b) Safety valves are to be made with working parts having adequate clearances to ensure complete freedom of movement.

(c) Valve seats are to be effectively secured in position. Any adjusting devices which control discharge capacity, are to be positively secured so that the adjustment will not be affected when the safety valves are dismantled at surveys.

(d) The easing gear is to be provided for lifting safety valves and operated by mechanical means from the boiler or engine room platforms free from danger.

(e) All safety valves of each boiler may be fitted in one chest, which is to be separate from any other valve chest and is to be connected directly to the shell by a strong and stiff neck. The safety valve of the super-heater, however, may be fitted with flanges to the distance pieces welded to the outlet connection.

(f) The steam passage of safety valves is to be of cross-sectional area not less than the aggregate area of the safety valves in the chest in the case of full lift valves, and 1/2 of that area in the case of other valves. For the meaning of aggregate area, see 4.2.2 (b) above.

(g) Each safety valve chest is to be drained by a pipe fitted to the lowest part and led with a continuous fall to the bilge or to a tank, clear of the boilers. No valves or cocks are to be fitted to these drainpipes. It is recommended that the bore of the drainpipe be not less than 19 mm.

4.2.4 Waste steam pipes

(a) For ordinary, high lift and improved high lift type safety valves, the cross-sectional area of the waste steam pipe and passages leading to it is to be at least 10% greater than the aggregate area of the safety valves as calculated by the formulae in 4.2.2 (b) above. For full lift and other approved safety valves of high relieving capacity, the cross-sectional area of the waste steam pipe and passages is not to be less than twice the aggregate valve area where $K_8 = 5.25$, and not less than 3 times the aggregate valve area where K_8 has a lower value.

(b) Where a common waste steam pipe is provided for two or more safety valves, the cross-sectional area of which is not to be less than the aggregate area of steam passage of each safety valve.

(c) The scantlings of waste steam pipes and silencers are to be suitable for the maximum pressure to which the pipes may be subjected in service and in any case not less than 1 MPa.

(d) The safety valves of each exhaust gas heated economizer and exhaust gas heated boiler which may be used as an economizer are to be provided with entirely separate waste steam pipes.

(e) External drains and exhaust steam vents to atmosphere are not to be led to waste steam pipes.

(f) It is recommended that a scale trap and means for cleaning be provided at the base of each waste steam pipe.

(g) Waste steam pipes are to be led to the atmosphere and are to be adequately supported and provided with suitable expansion joints, bends or other means to relieve the safety valve chests of undue loading.

4.2.5 Setting of safety valves

Safety valves are to be set under steam in accordance with the following requirements after the installation on board the ship.

(a) Where boilers are not fitted with super-heater, the safety valves are to be set to open at a pressure of not more than 3% above the approved design pressure, and in no case at a pressure higher than:

(i) the design pressure of the steam piping, or

(ii) the least sum of the design pressure of machinery connected to the boiler and the pressure drop in the piping between this machinery and the boiler.

(b) Where boilers are fitted with super-heaters, the safety valves on the super-heater are to be set to a pressure not higher than:

(i) the design pressure of the steam piping, or

(ii) the least sum of the design pressure of machinery connected to the boiler and the pressure drop in the piping between this machinery and the boiler.

(c) The safety valves on the boiler drum are to be set to a pressure not less than the super-heater valve setting plus 0.035 MPa plus the pressure drop through the super-heater, when the boiler stop valves are closed and the super-heater safety valves are relieving at their rated capacity. In no case, however, are the safety valves to be set to a pressure higher than 3% above the design pressure of the boiler.

4.2.6 Accumulation tests

(a) During a test of 15 minutes for fire tube boilers and 7 minutes for water tube boilers with stop valves closed and under full firing condition, the accumulation of pressure is not to exceed 10% of the design pressure of the boiler. During this test no more feed water is to be supplied than is necessary to maintain a safe working water level. The popping point of each safety valve is not to be more than 3% above its set pressure. The test is to be carried out in the presence of the Surveyor.

(b) Where the test prescribed in 4.2.6(a) above may endanger the super-heater, it may be omitted in the case of oil-fired boilers provided that application is made to state the omission of this test on the boiler and safety valves for approval, and that the safety valve is of an approved type for which the capacity has been established by tests in the presence of the Surveyor or an approved independent authority, or for which the Society is satisfied, by long experience of accumulation tests, that the capacity is adequate. The operation of the safety valve under approximately normal firing condition of the boiler is to be found satisfactory by the Surveyor during the trials of the machinery on board ship.

4.2.7 Where, for any reason, the allowable pressure is lower than that for which the boiler and safety valves were originally designed, the relieving capacity of safety valves under the lower pressure is to be checked against the evaporating capacity of the boiler. For this purpose, it is to be demonstrated by accumulation test in 4.2.6 above that the valve capacity is sufficient for the new conditions.

4.3 Other Boiler Mountings

4.3.1 Steam stops valves

(a) A stop valve is to be fitted directly to the boiler drum at each steam outlet.

(b) In case where the steam from more than two boilers is led to one common steam pipe, the stop valve to be provided on each steam outlet as required in 4.3.1(a) above is to be of the screw-down non-return valve, and one additional stop valve is to be provided on each steam pipe between the non-return valve and the steam pipe connection.

(c) When a boiler is fitted with a super-heater, it is desirable that the auxiliary as well as the main stop valve be located at the super-heater outlet in order to insure a flow of steam through the super-heater at all times, except that where the total superheat temperature is low, the arrangement will be specially considered.

(d) Where no special provisions are made in the construction of auxiliaries to permit their satisfactory operation with superheated steam, a desuperheating arrangement is to be provided.

(e) Where the steam stop valve exceeds 152 mm in diameter, it is to be fitted with a by-pass valve.

4.3.2 Feed water valves

(a) Each boiler is to be provided with two independent feed check valves. But for small vertical boilers and exhausts gas boilers for non-essential service, one feed check valve may be accepted. For boiler feed water systems, see Chapter 4 of Part VI.

(b) The feed stop valves is to be fitted directly to the boiler or the economizer inlet, where the latter forms a part of the boiler. However, consideration will be given to locating the valve near the operating platform, provided it is connected to the boiler or the economizer by a seamless steel standpipe or other approved material, which may have welded joints but is to have no intervening flanges.

(c) Each feed water line is to be provided with a screw down check valve adjacent to the feed stop valve or as close thereto as practicable. An approved form of feed water regulator may, however, be interposed between the check and the stop valves provided it is fitted with a by-pass.

(d) On boilers fitted with economizer a check valve is to be fitted in the feed water line between the economizer and the boiler drum. This check valve is to be located as close to the boiler drum feed water inlet nozzle as possible. When a by-pass is provided for the economizer, the check valve is to be of a screw down type.

(e) Where an economizer is fitted with a by-pass, a sentinel relief valve is to be provided on the economizer unless the by-pass arrangement will prevent a build-up of pressure in the economizer when it is by-passed.

(f) If a common inlet pipe is fitted on the economizer for both systems, this pipe is to be as short as possible, and feed valves are to be arranged in such a way that either feed water line can be effectively isolated without interrupting the feed water supply to the boiler.

(g) For boilers with a design pressure of 27.6 bar or over, the feed water connection to the boiler drum is to be fitted with sleeve or other suitable device to reduce the effect of metal temperature differences between the feed pipe and the shell or end plate of the boiler. Similar arrangements are to be provided for desuperheater and other connections where significant temperature differences occur in service.

(h) Special means is to be provided that the feed water is not to impinge directly against surfaces exposed to hot gas or the radiation of the fire.

(i) The design pressure of feed water valves, feed water regulations or distance pieces in the feed water system is to be based on at least 1.25 times the design pressure of the boiler or the maximum working pressure of the feed or circulating water pump, whichever is the greater.

4.3.3 Blow-off and scum valves

(a) Each boiler is to have at least one blow-off valve or cock, either attached directly to the lowest part of the boiler or fitted with a steel pipe of substantial thickness leading to the lowest part. Where a scum blow is fitted, the valve is to be located within the permissible range of water level or fitted with a scum pan or pipe at this level.

(b) The blow-off valve and its connections to the sea is not to be less than 25 mm and need not be more than 65 mm in nominal diameter. However, for a boiler having a total heating surface of 10 m^2 or less, the blow-off valves and it's connections may be 20 mm in nominal diameter.

(c) Blow-off valves and scum valves (where the latter are fitted) of two or more boilers may be connected to one common discharge, but where thus arranged there are to be screw-down non-return valves fitted for each boiler to prevent the possibility of the contents of one boiler passing to another.

(d) Blow-off pipes, which may be exposed to direct heat from the fire are to be suitable protected.

(e) The design pressure of blow-off system is to be at least 1.25 times the design pressure of the boiler.

(f) Blow-off valves are to be of such construction that they are free from deposition of scales and other sediments.

4.3.4 Water gauges and test cocks

(a) Each boiler designed to contain water at specified levels is to be fitted with at least 2 independent means of indicating the water level, one of which is to be a glass gauge. The other means is to be either an additional glass gauge or an approved equivalent device.

(b) Water and steam drums exceeding 4 m in length and placed athwartships are to have a glass water gauge at or near each end of the drum.

(c) At least one test cock for testing boiler water is to be fitted directly to each boiler plating in a convenient position. It is not to be fitted on the water gauge mountings or standpipes.

(d) Water gauges is to be readily accessible and positional so that the water level is clearly visible. The lowest visible part of the glass water gauge is to be not less than 50 mm above the lowest safe working water level. The visible range of the remote level indicator is to be such provided with such means as to ascertain their proper that it covers all ranges related to the water level control in the boiler.

(e) The combustion chamber top of a cylindrical, horizontal boiler and the furnace crown of a vertical boiler are to be clearly marked in a position adjacent to the glass water gauge. Water gauges are to be fitted with valves or cocks at each end of the glass gauge. The cocks are to be accessible for closing from positions free from danger in the event of the glass breaking.

(f) Mountings for glass water gauges are to be fitted directly to the boiler plating or to stand pillars or columns. Stand pillars and columns are to be bolted directly to the means of pipes. These pipes are to be fitted with terminal valves or cocks secured directly to the boiler shell. Valves and cocks are to have fixed hand-wheels or handles, and are to be provided with means for clearly indicating whether they are open or closed. The upper ends of pipes, connecting the water gauge column to the boiler, are to be arranged such that there is no pocket or bend where an accumulation of water can lodge. They are not to pass through the uptake if they can be otherwise arranged. If, however, this condition cannot be complied with, they may pass through it by means of a passage at least 50 mm clear of the pipe all round and open for ventilation at both ends.

(g) The water level indicators are to be so located that the water level can be ascertained despite the movement and inclination of the ship at sea.

(h) For cylindrical boilers, the internal diameter of water gauge stand pillars or columns, and connecting pipes are to have dimensions as given in Table V 4-1.

Table V 4-1
Stand Pillars and Connecting Pipes for Boiler Water Gauge

Internal diameter of boiler, D (mm)	Internal diameter of stand pillar (mm)	Inside diameter of connecting Pipe (mm)
$D \leq 2300$	≥ 45	≥ 25
$2300 < D \leq 3000$	≥ 50	≥ 32
$3000 < D$	≥ 63	≥ 38

4.3.5 Water sampling valves or cocks

At least one valve or cock is to be fitted to each boiler for boiler water sampling. They are to be directly connected to the boiler in a convenient location, but are not to be connected to the water gauge mountings or stand pillars.

4.3.6 Burning System

(a) Fuel Oil Burners

(i) Fuel oil burners are to be so arranged that they cannot be withdrawn unless the fuel oil supply to those burners is shut off.

(ii) For top firing boilers, in order to absorb the vibration, flexible joints approved by the Society are to be provided at the connections between the fuel oil burner and the fuel oil supply pipe.

(b) Draught Fans

The boilers are to be provided with draught fans with a capacity sufficient for the designed maximum steam evaporation of the boiler and for the stable combustion in the boiler within its service range. An alternative means which is available to ensure the normal navigation and cargo heating that is required continuously is to be provided, in the case of failure of the draught fan.

4.3.7 Pressure and Temperature Measuring Devices

(a) Each boiler is to be provided with one set of pressure measuring device at the boiler drum and at the superheated outlet respectively, and pressure indicators are to be arranged in the monitoring station.

(b) The pressure indicator is to be such that it has a scale of 1.5 times or over the set pressure of the safety valve. The approved working pressure for the drum or the nominal pressure for the superheated is to be specially marked on the scale of the pressure gauges, respectively.

(c) Pressure measuring and indicating devices are to be operation while the boiler is in operation.

(d) At the steam outlet of the superheated or reheated, temperature measuring devices are to be provided.

4.4 Safety Devices and Alarm Devices of Boilers

4.4.1 Fuel oil shut-off device

Each boiler is to be fitted with a safety device which is capable of shutting off automatically the fuel supply to all burners in the cases of the following:

(a) When automatic ignition fails.

(b) When the flame vanishes (in this case, the fuel oil supply is to be shut-off within 4 seconds after the extinguishing of flame).

(c) When the water level falls. The water level sensor is to be located to minimize the effect of roll and pitch, to prevent trip-out due to transients or to the vessel's motion.

(d) When the combustion air supply stops.

(e) When the fuel oil supply pressure to the oil burners falls in the case of pressure atomizing, or when the steam pressure to the burners falls in steam atomizing.

(f) When loss of boiler control power.

(g) When considered necessary by the Society.

4.4.2 Alarm devices

(a) Each boiler is to be provided with an alarm device which operates when the water level in the drum falls.

(b) In addition to the above, the main boilers are to be provided, with alarm devices which operate in the following cases:

(i) When combustion air supply reduces, or when the draught fan stops.

(ii) When the fuel oil supply pressure to the burner falls, in the case of pressure atomizing, or when the steam pressure to burner falls, in steam atomizing.

(iii) When the water level in boiler drum reaches to a high level.

(iv) When the steam temperature at the superheated outlet rises, if the superheated is provided.

(v) When the exhaust gas temperature at the outlet of the gas type air preheated or economizer rises.

(c) For auxiliary boilers supplying steam to the turbines driving main generators, alarm devices which operate when the water level in the boiler drum reaches to a high level are to be provided in addition to those alarm devices given in 4.4.2(a).

4.5 Mountings for Pressure Vessels

4.5.1 Material of mountings

The material of nozzles, flanges or distance pieces attached directly to the shell of pressure vessels of Group I and II is to be of the equivalent material of the shell. However, this requirement may be dispensed with for flanges to be bolted or where approved by the Society.

4.5.2 Construction of mountings

(a) Mountings such as valves, flanges, and bolts, nuts, gaskets, etc. are to have the construction and dimensions conforming to the recognized standards and they are to conform to the service conditions specified in such standards.

(b) Mountings are to be attached to shells of pressure vessels of Group I and II with flanged joint or by welding. However, in case where the thickness of the shell is over 12 mm or in case where a seat for screwing is fitted to the shell, the mountings of not more than 32 mm in nominal diameter may be attached to the shell by screwing.

4.5.3 Safety devices

(a) Arrangements are to be made to prevent dangerous excessive pressure due to mishandling or to a rise in temperature. For this purpose, pressure vessels or systems of pressure vessels are to be protected by relief valves.

(b) Pressure vessels connected together in a system by piping of adequate capacity containing no valve that can isolate any pressure vessel, may be considered a system of pressure vessels for the application of relief valves as specified in 4.5.3(a) above.

(c) Where it may create a dangerous condition only when the pressure vessel is exposed to a fire or other unexpected source of external heat, a pressure relieving device is to be provided to prevent the pressure from exceeding to more than 1.2 times the design pressure. However, if an air reservoir is provided with a fusible plug with melting point not exceeding 150°C to release the pressure automatically in the case of a fire, the pressure relieving device may be omitted.

(d) When a heat exchanger or a similar pressure vessel is fitted with tubes or heating coils, and fracture in tubes or coils may increase the normal working pressure of the fluid; a suitable relief valve is to be provided.

(e) The total capacity of relief valves, fitted to any pressure vessel or system of pressure vessels, is to be sufficient to discharge the maximum quantity of fluid that can be generated or supplied without occurrence of a rise in the pressure by more than 10% above the design pressure of the pressure vessel.

(f) Relief valves are to be adjusted to open at a pressure of not greater than the design pressure of the pressure vessel. The relief valve is to be capable of being eased at all times and closed effectively after lifting.

(g) There is no stop valve to be fitted to isolate the pressure vessel from any relief valve or other safety device except otherwise approved by the Society.

(h) Dangerous gases, vapours or liquids discharging from the relief valve are to be led to a safe position.

(i) The use of bursting discs or a combination of bursting discs and relief valves instead of relief valves is subject to consideration in each particular case.

(j) Drainage system including valves and internal pipes are to be so arranged that they can drain completely the oil and water from the lowest portion of the air vessel.

(k) Air vessels for the control of remotely operated valves are to be fitted with relief valves and not fusible plugs.

4.5.4 Pressure and temperature measuring devices

Pressure and temperature measuring devices are to be provided on pressure vessel where considered necessary.

4.6 Additional Requirements for Shell Type Exhaust Gas Economizers

4.6.1 Application

This requirement is applicable to shell type exhaust gas economizers that are intended to be operated in a flooded condition and that can be isolated from the steam piping system.

4.6.2 Design and Construction

Design and construction of shell type exhaust gas economizers are to pay particular attention to the welding, heat treatment and inspection arrangements at the tube plate connection to the shell.

4.6.3 Pressure Relief

(a) Number of Valves. The shell type exhaust gas economizer is to be provided with at least one safety valve, and when it has a total heating surface of 50 m^2 or more, it is to be provided with at least two safety valves in accordance with 4.2.

(b) Discharge Pipe. To avoid the accumulation of solid matter deposits on the outlet side of safety valves, the discharge pipes and safety valve housings are to be fitted with drainage arrangements from the lowest part, directed with continuous fall to a position clear of the shell type exhaust gas economizers where it will not pose threats to either personnel or machinery. No valves or cocks are to be fitted in the drainage arrangements.

4.6.4 Pressure Indication

Every shell type exhaust gas economizer is to be provided with a means of indicating the internal pressure. A means of indicating the internal pressure is to be located so that the pressure can be easily read from any position from which the pressure may be controlled.

4.6.5 Lagging

Every shell type exhaust gas economizer is to be provided with removable lagging at the circumference of the tube end plates to enable ultrasonic examination of the tube plate to shell connection.

4.6.6 Feed Water

Every shell type exhaust gas economizer is to be provided with arrangements for pre-heating and de-aeration, addition of water treatment or combination thereof to control the quality of feed water to within the manufacturer's recommendations.

4.6.7 Operating Instructions

The manufacturer is to provide operating instructions for each shell type exhaust gas economizer which is to include reference to:

(a) Feed water treatment and sampling arrangements.

(b) Operating temperatures – exhaust gas and feed water temperatures.

(c) Operating pressure.

(d) Inspection and cleaning procedures.

(e) Records of maintenance and inspection.

(f) The need to maintain adequate water flow through the economizer under all operating conditions.

(g) Periodical operational checks of the safety devices to be carried out by the operating personnel and to be documented accordingly.

(h) Procedures for using the exhaust gas economizer in the dry condition.

(i) Procedures for maintenance and overhaul of safety valves.

Chapter 5
Installation and Spare Parts

5.1 Installation of Boilers and Pressure Vessels

5.1.1 Boilers and pressure vessels are to be so arranged that all exterior parts are readily accessible for examination and repair.

5.1.2 Boilers and pressure vessels are to be so installed as to minimize the effects of the following loads or external forces:

(a) Ship motions or vibrations caused by machinery installations.

(b) External forces caused by the piping and supporting members fitted on the boiler and pressure vessel.

(c) Thermal expansions due to temperature fluctuation.

5.1.3 Boilers are to be efficiently insulated and the distance between a boiler and the floor or the tank top is to be as follows:

(a) The distance between the lowest part of a cylindrical boiler and the floor plate or tank top plate of double bottoms is to be 200 mm and above.

(b) The distance between the furnace bottom of a water tube boiler or under surface of ash pans and the floor plate or tank top plate of double bottoms is to be 760 mm and above.

5.1.4 The distance between boilers and compartments intended for oil is to be sufficient to provide access for maintenance of the structure and to prevent the temperature in the oil compartments from approaching the flash point of the oil. This clearance, generally, is to be 760 mm and above.

5.1.5 Sufficient head room is to be provided at the top of boiler to allow for adequate heat dissipation. This clearance is, generally, to be 1270 mm and above. No fuel oil or other oil tank is to be installed directly above any boiler.

5.1.6 Where boilers are located on tween decks in machinery spaces and boiler rooms are not separated from a machinery space by watertight bulkheads, the tween decks are to be provided with coamings at least 100 mm in height. This area may be drained to the bilges.

5.1.7 Pans of oil burning water tube boilers are to be so arranged as to prevent oil leaking into bilges, and pans are to be lined with firebrick or other refractory material.

5.1.8 The end plate in a steam space in way of an uptake is to be shielded by protecting plates from being exposed to waste gas. The joint of a funnel, uptake and the boiler casing as well as covers of openings is to be so arranged as to prevent waste gas leaking into the engine and boiler rooms.

5.1.9 When dampers are installed in the funnels or uptakes of vessels using oil, they are not to obstruct more than of the flue area when closed, and they are to be capable of being locked in the open position when boilers are in operation. In any damper installation the position of the damper and the degree of its opening are to be clearly indicated. The installation of power operated dampers for the regulation of superheated steam temperature will be specially considered.

5.1.10 All valves and cocks attached to boilers or pressure vessels are to be so arranged as to have a proper space around each of them in order to give facilities for their handling and operation.

5.2 Spare Parts for Boilers

5.2.1 Spare parts for boiler supplying steam propulsion and for essential services shown in Table V 5-1 are required.

Table V 5-1
Spare parts for boilers supplying steam propulsion and for essential services

Item	Spare parts	Number	
		Ships for Unrestricted service	Ships for restricted service
Tube stoppers or plugs	Tube stoppers or plugs, of each size used, for boiler, superheated and economizer tubes	10	6
Oil fuel burners	Oil fuel burners complete or a complete set of wearing parts for the burners, for one boiler	1 set	1 set
Gauge glasses	Gauge glasses of round type	2 sets per boiler	2 sets per boiler
	Gauge glasses of flat type	1 set for every two boilers	1 set for every two boilers

Chapter 6
Thermal Oil Heaters

6.1 General

6.1.1 The design and construction of thermal oil heaters heated by flame or combustion gas are to comply with the requirements specified in Chapters 1 through 4 of this Part as well as the requirements in this Chapter.

6.1.2 The thermal oil used in the thermal oil system is to be compatible with the oil being heated.

6.1.3 Thermal oil heaters are to be provided with means to sample thermal oil.

6.2 Safety Devices Etc. for Thermal Oil Heaters Heated by Flame

6.2.1 Temperature regulators are to be provided to control the temperature of the thermal oil within the predetermined range.

6.2.2 The master valve of the expansion tank is to be kept always open, and the burning system is to be interlocked in such a way that it does not start when the master valve is closed.

6.2.3 Safety valve or pressure relief pipe of sufficient capacity is to be provided.

6.2.4 The discharge pipes from the safety valve of the pressure relief pipe are to have their open ends in the thermal oil tank with sufficient capacity.

6.2.5 Pre-purging system is to be provided for preventing explosion of the furnace gas.

6.2.6 Alarm and Automatic shutoff measures are to be provided according to Table V 6-1.

Table V 6-1
List of Alarm and Shutoff for Thermal Oil Heaters

Items to be monitored	Indication	Alarm and Automatic shutoff	Notes:
Thermal oil expansion tank level, low	x	x	
Thermal oil flow or pressure, low	x	x	
Thermal oil outlet temperature, high	x	x	
Combustion air pressure or forced ventilation, low/shutoff		x	(1)
Oil fuel pressure, low	x		Standby pumps to start automatically(1)
Heavy oil fuel temperature or viscosity, low and great	x		For heavy oil fuel only(1)
Uptake temperature, high	x	x	(1)
Burner flame or ignition, flameout/failure		x	Each burner to be monitored(1)
Exhaust temperature, high	x		(2)

Notes:
(1) Applicable for Thermal Oil Heaters Heated by Flame.
(2) Applicable for Thermal Oil Heaters Directly Heated by the Exhaust Gas of Engines.

6.3 Safety Devices Etc., for Thermal Oil Heaters Directly Heated by the Exhaust Gas of Engines

6.3.1 The requirements of safety devices etc. in 6.2.1, 6.2.3 and 6.2.4 are to be complied with.

6.3.2 The master valve of an expansion tank is to be kept normally open and, such an interlocking device that exhaust gas dose not enter into the heater where the master valve is closed, is provided.

6.3.3 A shutdown device of exhaust gas is to be provided at the exhaust gas inlet of a thermal oil heater and, it is so arranged that the engine can be operable even when the supply of the exhaust gas to the heater is shutdown.

6.3.4 Means are to be provided to prevent the leakage oil from thermal oil heaters and water used for fire fighting or others from flowing into the exhaust gas duct of the engine.

6.3.5 Stop valves are to be provided at the inlet and outlet of the thermal oil.

6.3.6 Alarm and Automatic shutoff measures are to be provided according to Table V 6-1 and alarm is to be relayed to the monitoring-station.

6.3.7 A fixed fire extinguishing and cooling system as deemed appropriate by the Society is to be provided.

6.4 Thermal Oil Systems

The thermal oil system for thermal oil heaters is to be arranged in compliance with the requirements specified in 4.7 of Part VI.

Chapter 7
Incinerators

7.1 General

7.1.1 The design and construction of incinerators are to be in compliance with the requirements specified in Chapters 1 through 4 of this Part as well as the requirements in this chapter.

7.1.2 The requirements in this chapter do not apply to the incinerators with maximum capacity less than 34.5 kW.

7.1.3 Incinerators for oil or rubbish other than those produced by normal operation of the ship or the like are to be specially considered.

7.2 Drawings and Data

Notwithstanding the requirements in 1.3.1 of this Part, drawings and data to be submitted are as follows:

7.2.1 Drawings

(a) General arrangement of incinerator.

(b) Arrangement of incinerator fittings.

(c) Other drawings considered necessary by the Society.

7.2.2 Data

(a) Particulars.

(b) Instruction manual of safety devices.

(c) Operation manual of incinerator.

(d) Other data considered necessary by the Society.

7.3 Construction

7.3.1 The surface temperature of the incinerator is not to exceed 60°C.

7.3.2 Major parts of the combustion chamber are to be framed by effective material.

7.3.3 Combustion chambers are to be so constructed as to ensure that harmful combustion gas or drain will not leak.

7.3.4 Uptakes from the combustion chambers are:

(a) Not to be connected to the exhaust gas pipes from diesel engines and gas turbines;

(b) To be led to such positions that combustion gas will not enter inboard; and

(c) If they are connected to the uptakes from boilers, thermal oil heaters or other incinerators, to be subject to a special consideration by the Society.

7.3.5 A temperature-measuring device for combustion gas is to be provided.

7.3.6 The fire door for rubbish is to be arranged so that back-firing from the combustion chamber is prevented.

7.3.7 An over-pressure preventive device is to be provided to the water jacket, if any, of the incinerators.

7.3.8 Waste oil piping systems are to comply with the relevant requirements in 4.4 of Part VI.

7.3.9 A cleaning hole for maintenance is to be provided at bending part of the exhaust gas pipe.

7.3.10 Burning systems are:

(a) to be so arranged that the combustion chamber is prepurged by air before ignition;

(b) if automatic ignition adopted, to be so arranged that the fuel supply does not precede the ignition spark.

(c) if automatic fuel supply system is provided, to be capable of controlling the amount of fuel supplied; and

(d) if automatic combustion control device is provided, to comply with the requirements in 7.2 of Part VIII.

7.3.11 The location of the remote shut-off device for the incinerators are to be capable of being stopped from an easily accessible position outside the space concerned in the event of a fire in the space in which they are located and its vicinity.

7.4 Safety Devices and Alarm Devices

7.4.1 Incinerators fitted with automatic fuel or waste oil supply systems are to be provided with a safety device to stop the supply of fuel and waste oil to the burners automatically in the cases of the following:

(a) When the maximum working temperature of the furnace is exceeded.

(b) When the flame vanishes.

(c) When the flame scanner fails.

(d) When the control power supply loses.

(e) When the flue gas temperature high.

(f) When the forced draft fails.

7.4.2 Incinerators are to be provided with alarm devices, which operate in the following cases:

(a) When the approved working temperature of the furnace is exceeded.

(b) When the flame vanishes.

(c) When the flame scanner fails.

(d) When the control power supply loses

(e) When the power supply to the alarm device stops.

(f) When cooling system, if any, stops.

(g) When the waste oil supply pressure to the furnace falls, in the case of pressure atomizing.

(h) When the fuel supply pressure to the furnace falls, in the case of pressure atomizing.

(i) When combustion air supply system, if any, abnormal.

(j) When the flue gas temperature high.

(k) When the forced draft fails.

Chapter 8

Tests and Inspections

8.1 Welding Tests

Workmanship tests and examination of welding are to be carried out in compliance with the requirements specified in Part XII.

8.2 Hydraulic Pressure Tests

8.2.1 All new boilers, pressure vessels and thermal oil heaters are to be tested by the hydraulic pressure shown in Table V 8-1 after construction in the presence of the Surveyor. The test pressure is to be applied and maintained for at least 30 minutes to permit visual examination of all surfaces and joints.

8.2.2 Hydraulic tests on completion are to be carried out before the new boiler is put into service, according to one of the following procedures.

(a) At the manufacturers plant.

(b) After fitting on board a ship.

In the former case, it may be requested, if deemed necessary by the Surveyor, to proceed with a second hydraulic test on board under a pressure of 1.1 W.

8.2.3 Hydraulic tests specified in 8.2.2 above are to be carried out after all openings have been cut out and boilers are to be presented without lagging or paint.

8.2.4 In the case of hydraulic tests, boilerplates and walls are to withstand the test pressure without showing any permanent deformation or leakage, and special attention is to be paid to deformations in respect of circular shape furnaces.

8.3 On-board Tests

8.3.1 When boilers and super-heaters have been installed on board, following tests are to be carried out in the presence of the Surveyor:

(a) Safety valves are to be set in the hot condition of boilers and super-heaters in accordance with 4.2.5 of this Part.

(b) Accumulation tests are to be made in accordance with 4.2.6 of this Part.

(c) Function tests for the safety devices and alarm devices are to be carried out.

8.3.2 During mooring trials and sea trials of the ship, the Surveyor will ascertain the satisfactory working of main boilers and also of auxiliary boilers for essential services.

8.3.3 Thermal oil heaters are to be function and capacity tested according to an approve test program.

8.3.4 Incinerators are to be operation tested of the safety devices and alarm devices specified in 7.4 of this Part and burning test are to be carried out.

Table V 8-1
Hydraulic Test Pressure of Boilers, Pressure Vessels and Thermal Oil Heater

Item	Subject to be Tested	Tested Pressure to be Applied
1	Boiler	1.5W
2	Superheater	1.5W
3	Economizer	1.5W
4	Boiler mountings: Feed and blow-off system mountings and fittings Other mountings and fittings	 2.5W 2W
5	Pressure vessel	1.5W in no case less than 0.1 MPa. For pressure vessels of refrigerating machinery, see Table X 4-2 of part X.
6	Pressure vessel mountings	2W in no case less than 0.1 MPa.
7	Heat-exchanger	Same as item 5 but where it is not practicable test pressure may be determined in each case. For cooler, See Table IV 3-3 of Part IV.
8	Thermal oil heater	1.5W
Where: W = Design pressure of boiler or pressure vessel, in MPa.		

Appendix 1
Compensation for Opening

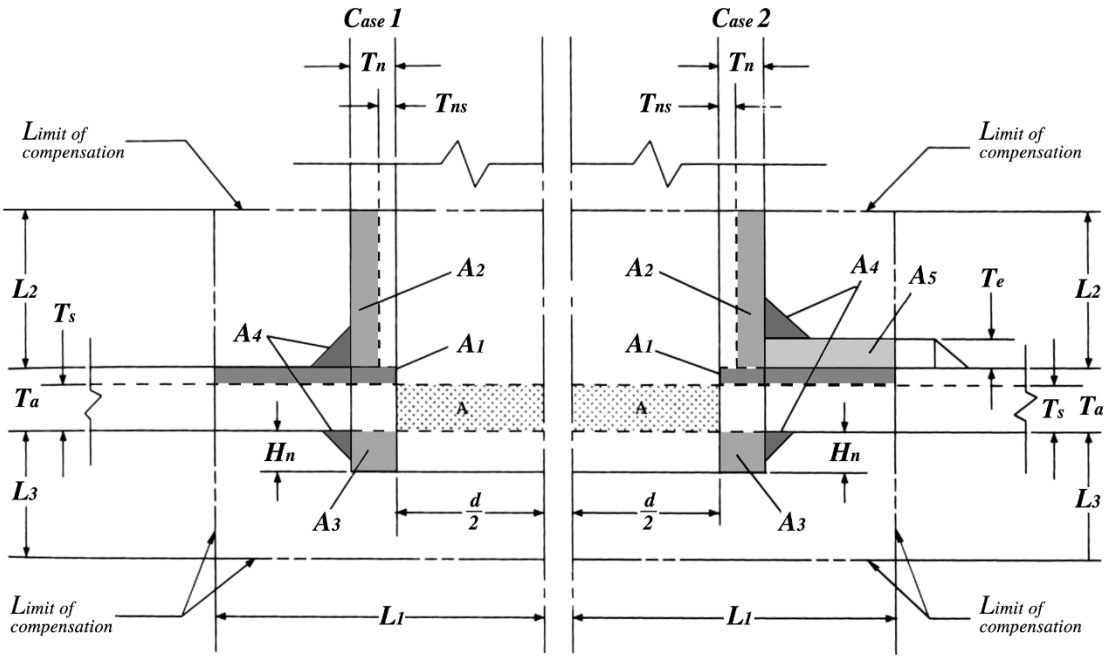

A1.1 Calculation Procedure of Compensation for Opening

A1.1.1 Minimum required area for compensation, in mm^2 marked

$A = d_s \cdot T_s$

A1.1.2 Limits of compensation.

Along wall : $L_1 = d$ or $\frac{d}{2} + T_a + T_n$, whichever is greater.

Normal to wall : $L_2 = 2.5T_a$ or $2.5T_n + T_c$, whichever is smaller.

Extending inside wall : $L_3 = 2.5T_a$ or $2.5T_n$, whichever is smaller.

A1.1.3 Areas available for compensation

A_1 = Compensation available in shell or end plate, in mm^2.

A_2 = Compensation available in nozzle, in mm^2.

A_3 = Compensation available in nozzle extending inside vessel wall, in mm^2.

A_4 = Attachment welds, in mm^2.

A_5 = Added compensation, in mm^2.

A1.1.4 If $A_1+A_2+A_3+A_4 \geq A$: Opening is adequately compensated, and

if $A_1+A_2+A_3+A_4 < A$: The difference is to be supplied by added compensation.

After added compensation provided,

$A_1+A_2+A_3+A_4+A_5 \geq A$: Opening is adequately compensated.

A1.2 Calculation of Area Available for Compensation

Mark	Area	Limit of Compensation		Calculation	Compensation Available	
					Case 1 Without added compensation	Case 2 With added compensation
	A_1	L_1	d	$2(ET_a - T_n)\left(d - \frac{d}{2}\right)$	$(ET_a - T_s)d$	$(ET_a - T_s)d$
			$\frac{d}{2} + T_a + T_n$	$2(ET_a - T_s)\left(\frac{d}{2} + T_a + T_n - \frac{d}{2}\right)$	$2(ET_a - T_s)(T_a + T_n)$	$2(ET_a - T_s)(T_a + T_n)$
	A_2	L_2	$2.5T_a$	$2(T_n - T_{ns})2.5T_a$	$5(T_n - T_{ns})T_a$	$5(T_n - T_{ns})T_a$
			$2.5T_n + T_c$	$2(T_n - T_{ns})(2.5T_n + T_c)$	$5(T_n - T_{ns})(5T_n + 2T_c)$	$(T_n - T_{ns})(5T_n + 2T_c)$
	A_3	L_3	H_n		$2T_nH_n$	$2T_nH_n$
	A_4	Within L_1, L_2 and L_3			All attachment welds within limits of compensation	
	A_5	L_1	d	$2\left(d - \frac{d}{2} - T_n\right)T_c$	–	$(d - T_n)T_c$
			$\frac{d}{2} + T_a + T_n$	$2\left(\frac{d}{2} + T_a + T_n - \frac{d}{2} - T_n\right)T_c$	–	$2T_aT_c$

Where:

T_a = Actual thickness of vessel wall, in mm.

T_s = Required thickness omitting the corrosion allowance of a seamless shell, header or end plate without opening, in mm.

T_n = Actual thickness of nozzle wall, in mm.

T_{ns} = Required thickness of a seamless nozzle wall omitting the corrosion allowance, in mm.

T_c = Thickness of added compensation, in mm.

d_s = Maximum diameter of finished opening in the longitudinal cross section for shell or in the cross section for end plate, in mm.

d = Diameter of finished opening in a given plane, in mm.

H_n = Actual height of nozzle extending inside wall, in mm.

Tel: *+886 2 25062711*
Fax: *+886 2 25074722*
E-mail: *cr.tp@crclass.org*
Website: *http://www.crclass.org*
© CR – All rights reserved

財團法人驗船中心
CR CLASSIFICATION SOCIETY

RULES FOR THE CONSTRUCTION AND CLASSIFICATION OF STEEL SHIPS 2022

PART VI – PIPING AND PUMPING SYSTEMS

July 2022

財團法人驗船中心
CR CLASSIFICATION SOCIETY

RULES FOR THE CONSTRUCTION AND CLASSIFICATION OF STEEL SHIPS 2022

PART VI – PIPING AND PUMPING SYSTEMS

July 2022

RULES FOR THE CONSTRUCTION AND CLASSIFICATION OF STEEL SHIPS

PART I CLASSIFICATION AND SURVEY

PART II HULL CONSTRUCTION AND EQUIPMENT

PART III SPECIAL SERVICE AND TYPE OF SHIPS

PART IV MACHINERY INSTALLATIONS – CONSTRUCTION AND SHAFTING

PART V BOILERS, PRESSURE VESSELS, THERMAL OIL HEATERS AND INCINERATORS

PART VI PIPING AND PUMPING SYSTEMS

PART VII ELECTRICAL INSTALLATIONS

PART VIII AUTOMATIC OR REMOTE CONTROL AND MONITORING SYSTEMS

PART IX FIRE PROTECTION, DETECTION AND EXTINCTION

PART X REFRIGERATED CARGO INSTALLATIONS

PART XI MATERIALS

PART XII WELDING

PART XIII NAVIGATIONAL SAFETY SYSTEMS

PART XIV GOAL-BASED SHIP CONSTRUCTION STANDARDS SHIPS

PART XV HULL CONSTRUCTION AND EQUIPMENT FOR SHIPS LESS THAN 90 M IN LENGTH

List of major changes in Part VI from 2019 edition

2.1.4	Amend No.1	3.2.1	Amend No.2
2.1.5	Amend No.1	3.2.2	Amend No.2
4.5.4 & 4.5.5	Amend No.1	3.2.3	Amend No.2
5.9.1(f)	Amend No.1	3.2.4	Amend No.2
Table VI 6-1	Amend No.1	3.2.5	Amend No.2
1.5.3	Amend No.2	3.2.6~3.2.17	Amend No.2

Acronyms

AIS	Automatic Identification System
ANTS	Automatic Navigation and Track-keeping System
ARPA	Automatic Radar Plotting Aid
BC Code	Code of Safe Practice for Solid Bulk Cargoes
BNWAS	Bridge Navigational Watch Alarm System
CA	Controlled Atmosphere
CDI	Chemical Distribution Institute
COW	Crude Oil Washing
CPA	Closest Point of Approach
CPP	Controllable Pitch Propeller
CSC	International Convention for Safe Containers
CSR	Common Structural Rules
CTOD	Crack Tip Opening Displacement
ECDIS	Electronic Chart Display and Information System
EEBD	Emergency Escape Breathing Devices
ENC	Electronic Navigational Chart
ESP	Enhance Survey Plan
ETA	Emergency Towing Arrangement
FEU	Forty-foot Equivalent Unit
FMEA	Failure Mode & Effect Analysis
FRP, GRP	Fibreglass Reinforced Plastics
FTP Code	International Code for Application of Fire Test Procedures
GBS	Goal-Based ship construction Standards
GDC	General Dry Cargo
GLONASS	Global Navigation Satellite System
GMDSS	Global Maritime Distress and Safety System
GPS	Global Positioning System
HAZ	Heat Affected Zone
HHP anchor	High Holding Power anchor
HSC	High Speed Craft
HTS	High Tensile Steel
IACS	International Association of Classification Societies
IBC Code	International Code for the Construction and Equipment of Ships Carrying Dangerous Chemicals in Bulk

ICS	The International Chamber of Shipping
IEC	International Electrotechnical Commission
IGC Code	International Code for the Construction and Equipment of Ships Carrying Liquefied Gases in Bulk
ILO	International Labour Organization
IMDG Code	International Maritime Dangerous Goods Code
IMO	International Maritime Organization
ISO	International Standards Organization
LAN	Local Area Network
LCS	Loading Computer System
LEL	Lower Explosive Limit
LRIT	Long-range Identification and Tracking of ships
MARPOL	International Convention for the Prevention of Pollution from Ships
MARVS	Maximum Allowable Relief Valve Setting
MEPC	Marine Environment Protection Committee
MLC	Maritime Labour Convention
MSC	Maritime Safety Committee
NDT	Nondestructive Testing
OCIMF	The Oil Companies International Marine Forum
OOW	Officer Of the Watch
PA	Public Address
PMA	Permanent Means of Access
PMS	Planned Machinery Maintenance Scheme
RH	Relative Humidity
RIT	Remote Inspection Techniques
PSPC	Performance Standard for Protective Coating
SENC	System Electronic Navigational Chart
SHHP anchor	Super High Holding Power anchor
SOLAS	International Convention for the Safety of Life at Sea
SRE	Ship Recycling
STCW	International Convention on Standards of Training, Certification and Watch-keeping for Seafarers
STS operation	Ship-To-Ship operation
S-VDR	Simplified Voyage Data Recorder
TCPA	Time to CPA
TEU	Twenty-foot Equivalent Unit

THD	Total Harmonic Distortion
TMCP	Thermo-Mechanical Controlled Processing
UPS	Uninterruptible Power Supply
VDR	Voyage Data Recorder
VEC	Vapor Emission Control

RULES FOR THE CONSTRUCTION AND CLASSIFICATION OF STEEL SHIPS

PART VI
PIPING AND PUMPING SYSTEMS

CONTENTS

Chapter 1 General 1

1.1 General 1
1.2 Design Pressure 1
1.3 Design Temperature 1
1.4 Classes of Pipes 2
1.5 Materials 2
1.6 Plans 2

Chapter 2 Piping Design and Arrangements 4

2.1 General 4
2.2 Strength of Pipes 4
2.3 Materials 6
2.4 Steel Pipes, Valves and Other Fittings 10
2.5 Copper and Copper Alloy Pipes, Valves and Other Fittings 10
2.6 Nodular Cast Iron Pipes, Valves and Other Fittings 10
2.7 Ordinary Cast Iron Pipes, Valves and Other Fittings 11
2.8 Plastic Pipes 11
2.9 Flexible Hoses 19
2.10 Pipe Joints 21
2.11 Pipe Welding 25
2.12 Construction of Pumps 25
2.13 General Requirements of Piping Arrangement 25
2.14 Aluminum and Aluminum Alloy Pipes, Valves and Other Fittings 27

Chapter 3 Hull Piping Systems 29

3.1 Ship's Side Fittings 29
3.2 Air Pipes and Over Flow Pipes 29
3.3 Air Pipe Closing Devices 31
3.4 Sounding Pipes 35
3.5 Hull Piping Systems 37
3.6 Drainage of Cargo Holds 38
3.7 Drainage of Machinery and Tunnel Spaces 39
3.8 Drainage from Refrigerated Cargo Holds 39
3.9 Drainage from Spaces in Other Decks 40
3.10 Drainage of Tanks 40
3.11 Sizes of Bilge Suction Pipes 40
3.12 Bilge Pumps 41
3.13 Additional Requirements for Bilge Drainage and Cross Flooding Arrangements for Passenger Ships 42

3.14 Drainage Arrangements for Ships not Fitted with Propelling Machinery 43
3.15 Ballast Systems 43
3.16 Cargo Vapor Emission Control System 44

Chapter 4 Machinery Piping Systems 48

4.1 Boiler Feed Systems 48
4.2 Steam Piping System 49
4.3 Cooling Water System 50
4.4 Fuel Oil System 51
4.5 Lubricating Oil and Hydraulic System 58
4.6 Starting Air System 61
4.7 Thermal Oil Systems 63
4.8 Exhaust Gas Piping Arrangement 63

Chapter 5 Oil Tankers Piping Systems 65

5.1 General 65
5.2 Piping Arrangements 65
5.3 Cargo Pumps 66
5.4 Cargo Pump Rooms 66
5.5 Cargo Oil Tanks and Cofferdam 67
5.6 Slop Tanks 68
5.7 Piping Arrangement of Crude Oil Washing Systems 68
5.8 Inert Gas System 69
5.9 Cargo Oil Tank Venting, Purging and Gas- freeing 74
5.10 Cargo Oil Tank Level Gauging Equipment 77
5.11 Cargo Heating Arrangements 78
5.12 Installaiton and Tests 79

Chapter 6 Equipment and Arrangement for Oil Pollution Prevention 80

6.1 General 80
6.2 Storage and Discharge of Oily Residues (Sludge), Bilge Water Holding Tanks 80
6.3 Oil Filtering Equipment 82
6.4 Requirements for Installation 82
6.5 Fuel and Lubricating Oil Tanks Protection 83
6.6 STS Operation Plan 84

Chapter 6A Equipment for Sewage Pollution Prevention 86

6A.1 General 86
6A.2 Equipment for Sewage Pollution Prevention 86

Chapter 7 Tests and Inspections 88

7.1 Tests and Inspections before Installation on Board 88
7.2 Tests and Inspections after Assembly on Board 89
7.3 Hydrostatic Tests of Valves and Fittings 89

Chapter 1
General

1.1 General

1.1.1 Classed ships are to be provided with necessary pumping and piping facilities for acquiring safe and efficient operation in the services for which they are intended.

1.1.2 The arrangements and details are to comply with the following requirements which are applicable to ocean going cargo ships but may be modified for ships classed for limited or other services.

1.2 Design Pressure

1.2.1 The design pressure for pipes is the maximum permissible working pressure and is not to be less than the highest set pressure of the safety devices.

1.2.2 In water tube boiler installations, the design pressure for steam piping between the boiler and integral superheater outlet is to be taken as the design pressure of the boiler, i.e. not less than the highest set pressure of any safety valve on the boiler drum. For piping leading from the superheater outlet, the design pressure is to be taken as the highest set pressure of the super-heater safety valves.

1.2.3 The design pressure of feed piping and other piping on the discharge from pumps is to be taken as the pump pressure at the full rated speed against a shut valve. Where a safety or the protective device is fitted to restrict the pressure to a lower value than the shut value load, the design pressure is to be the highest set pressure of the device.

1.2.4 For boiler blow-off piping, the design pressure is to be taken not less than the pressure of 1.25 times the maximum allowable working pressure of the boiler.

1.2.5 For piping in refrigerating systems, the design pressure is to be based upon the pressure as shown in Part X Table X 2-2.

1.2.6 For piping in the steering gear system, the design pressure, see 4.5.5(b) of this Part.

1.2.7 For pipes containing fuel oil, the design pressure is to be taken as the maximum working pressure or 0.3 MPa, whichever is the greater. However, for those with a working temperature above 60°C and a working pressure above 0.7 MPa, the maximum working pressure or 1.4 MPa, whichever is the greater.

1.2.8 Where it is impracticable to adopt those specified above, the design pressure is to be specially considered by the Society in each case.

1.3 Design Temperature

1.3.1 The design temperature for pipes is to be taken as the highest working temperature of the internal fluid, but in no case it is to be less than the room temperature.

1.3.2 In the case of pipes for superheated steam, the temperature is to be taken as the designed operating steam temperature for the pipeline, provided that the temperature at the superheater outlet is closely controlled. Where temperature fluctuations exceeding 15°C above the designed temperature are to be used for determining the allowable stress and the design temperature is to be increased by the amount of this excess.

1.4 Classes of Pipes

1.4.1 For the purpose of testing, pipes are subdivided into three classes according to service, design pressure and design temperature as indicated in Table VI 1-1.

1.4.2 For Class II and Class III both pressure and temperature conditions are to be met, for Class I piping one condition only is sufficient.

1.5 Materials

1.5.1 The materials to be used for the various pipes, valves and fittings are to be suitable for the medium and service for which the piping is intended.

1.5.2 In the case of especially corrosive media, the materials for the piping system will be considered by the Society in each particular case.

1.5.3 Material for pipes, valves and relative fittings belonging to Class I and II and for valves and pipes fitted on the ship's side and for valves fitted on the collision bulkhead are to be tested in accordance with the Rules of the Society. (See 2.3 of this Part)

1.5.4 The internal workshop certificates for pipes, valves and fittings belonging to Class III may required.

1.6 Plans

1.6.1 Following plans are to be submitted for consideration and approval before the work concerned is proceeded:

General pumping arrangements including air, sounding and overflow pipes and fittings.

Bilge and ballast systems with the capacities of pumps.

Fire main and fire extinguishing system.

Boiler feed system.

Sea water distillation system.

Steam and exhaust systems.

Essential sea water and fresh water service system.

Starting air system.

Hydraulic power piping systems.

Exhaust piping for internal combustion engines and boilers.

Fuel oil transfer and service systems, including the arrangement of pipes and fittings at tanks.

Fuel and cargo oil overflow systems.

Liquid fuel tanks not forming part of the ship's structure.

Machinery circulating cooling water system.

Lubricating oil system.

Compressed air system.

Steering gear pumping system.

Sanitary system.

Cargo oil system including piping and pumping arrangements and drainage of cofferdams and pump rooms.

Tank gas freeing and ventilating piping system.

Exhaust gas piping arrangement and spark arresting appliance of internal combustion engine, boiler, heating plant, cooking range and store.

Crude oil washing arrangement (where fitted).

Inert gas system arrangement (where fitted)

1.6.2 The plans are to consist of a diagrammatic drawing of each system accompanied by material lists giving size, wall thickness, maximum working pressure and material grade of all pipes; and the type, size, pressure rating and material of valves and fittings. Where superheated steam is used, the temperatures are also to be given.

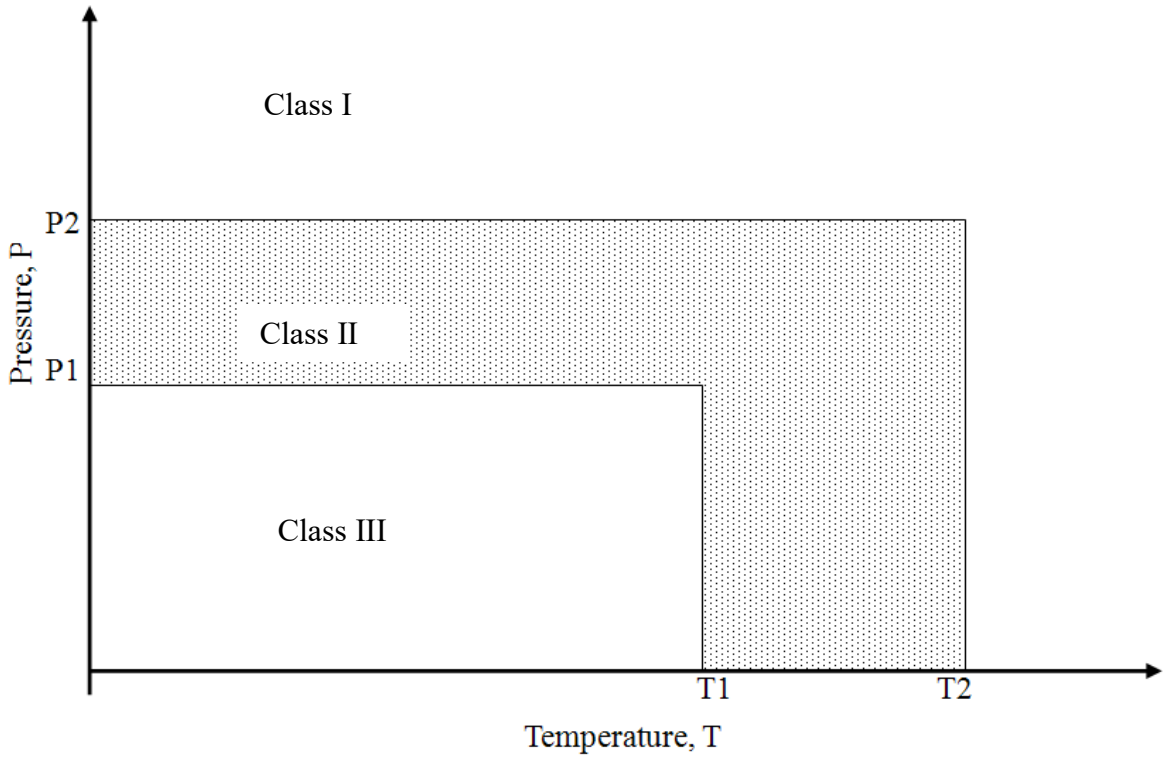

Fig. VI 1-1
Classes of Pipes

Table VI 1-1
Classes of Pipes

Piping System for	Class I		Class II	Class III	
	P > P2 (MPa) or T > T2 (ºC)		Bounded by Class I and III as Fig. VI 1-1	P ≤ P1 (MPa) & T ≤ T1 (ºC)	
Corrosive media	Without special safeguards		With special safeguards(1)	Not applicable	
Toxic media	All		Not applicable(2)	Not applicable(2)	
Flammable media heated to above flash point or with flash point below 60ºC Liquefied Gas	Without special safeguards		With special safeguards(1)	Open-ended piping(3)	
Cargo oil	Not applicable		Not applicable	All(4)	
Steam	1.6	300	Any pessure-temperature combination not belong to Class I or III	0.7	170
Thermal oil	1.6	300		0.7	150
Fuel oil Lubricating oil Flammable hydraulic oil	1.6	150		0.7	60
Other media(5)	4.0	300		1.6	200

Notes:

(1) Safeguards for reducing leakage possibility and limiting its consequences:
e.g. pipes led in positions where leakage of internal fluids will not cause a potential hazard or damage to surrounding areas which may include the use of pipe ducts, shielding, screening etc.

(2) Class II, III pipes are not to be used for toxic media.

(3) Open ended pipes (drains, overflows, vents, exhaust gas lines, boiler escape pipes) irrespective of T, belong to Class III.

(4) Cargo oil pipes belong to Class III.

(5) Other media including water, air, gases, non-flammable hydraulic oil.

Chapter 2
Piping Design and Arrangements

2.1 General

2.1.1 The requirements of this chapter apply to the design and construction of piping systems, including pipe fitting forming parts of such systems.

2.1.2 The requirements of this chapter are related to piping-systems made of carbon, carbon-manganese, alloy steels or non-ferrous material normally installed on board ships for services considered in Table VI 1-1.

2.1.3 These requirements cover the following services: Air, vapor, gas(excluding liquefied gas cargo and process piping), water, lubricating oil, fuel oil, hydraulic fluid systems for steering gear, toxic gas and liquids, cargo oil and tank cleaning piping and open ended lines such as drains, overflows, vents and boiler escape pipes. They do not include pipes forming integral part of a boiler.

2.1.4 These requirements do not apply to cargo piping systems of ships carrying chemicals in bulk and piping systems intended for liquefied gases(cargo and process).

2.2 Strength of Pipes

2.2.1 The minimum wall thickness of pipes is not to be less than the greater of the values obtained by 2.2.2, 2.2.3, as applicable, or the minimum wall thickness required by 2.2.4.

2.2.2 Calculated wall thickness

The following requirements apply for pipes where the ratio external diameter to internal diameter does not exceed 1.7.

The calculated wall thickness of straight or bent pressure pipes is not to be less than determined from the following formula, as applicable:

$$t = t_0 + b + c$$

where:

t = Minimum calculated thickness (mm).

t_0 = Thickness calculated by the following basic formula (mm).

$$t_0 = \frac{P \cdot D}{2k \cdot e + P}$$

P = Design pressure (MPa).

D = External-diameter (mm).

k = Permissible stress (N/mm^2).

e = Efficiency factor.

(i) e = 1 for seamless pipes and for welded pipes delivered by manufacturers approved for making welded pipes which are considered as equivalent to seamless pipes.

(ii) for other welded pipes the Society will consider an efficiency factor value depending upon the service and the welding procedure.

b = Allowance for bending (mm)

The value for this allowance is to be chosen in such a way that the calculated stress in the bend, due to the internal pressure only, does not exceed the permissible stress.

When this allowance is not determined by a more accurate procedure, it is to be taken as not less than:

$$b = \frac{D}{2.5R} \cdot t_0$$

where:

R = Mean radius of the bend (mm).

c = Corrosion allowance (mm) as Table VI 2-1 and VI 2-2.

Table VI 2-1
Corrosion Allowance c for Steel Pipes

Piping service	c (mm)
Superheated steam systems	0.3
Saturated steam systems	0.8
Steam coil systems in cargo oil tanks	2.0
Feed water for boilers in open circuit systems	1.5
Feed water for boilers in closed circuit systems	0.5
Blow down for boilers systems	1.5
Compressed air systems	1.0
Hydraulic oil systems	0.3
Lubricating oil systems	0.3
Fuel oil systems	1.0
Cargo oil systems	2.0
Refrigerating plants	0.3
Fresh water systems	0.8
Sea water systems	3.0

Notes:

(1) For pipes passing through tanks, an additional corrosion allowance is to be considered according to the figures given in the Table, and depending on the external medium, in order to account for the external corrosion.

(2) The corrosion allowance may be reduced by 50% in case where pipes and any integral pipe joints are protected against corrosion by means of coating, lining etc.

(3) In the case of use special alloy steel with sufficient corrosion resistance, the corrosion allowance may be reduced to zero.

Table VI 2-2
Corrosion Allowance c for Non-ferrous Metal Pipes

Piping material	c (mm)
Copper, brass and similar alloys, copper-tin alloys except those with lead contents	0.8
Copper-nickel alloys (with Ni ≥ 10%)	0.5

Note: For media without corrosive action in respect of the material employed and in the case of special alloys with sufficient corrosion resistance the corrosion allowance may be reduced to zero.

2.2.3 Manufacturing tolerance

The value of t, calculated above, does not account for any negative manufacturing tolerance; therefore the said thickness is to be increased considering the negative manufacturing tolerance by means of the following formula:

$$t_1 = \frac{t}{1 - \frac{a}{100}}$$

where:

t_1 = Minimum thickness in the case of negative manufacturing tolerance (mm).

t = Minimum thickness calculated by formula given in 2.2.2 (mm).

a = Percentage negative manufacturing tolerance.

2.2.4 Minimum wall thickness

In all cases the minimum thickness of pipes are not to be less than those indicated in Table VI 2-3 to Table VI 2-8. For pipes which are also subject to Load Line Regulations, see 2.2.7.

2.2.5 Permissible stress k for carbon steel and alloy steel pipes

The permissible stress k for carbon steel and alloy steel pipes to be considered in formula of 2.2.2 is to be chosen as the lowest of the following values:

$$k = \frac{R_{20}}{2.7} \qquad k = \frac{E_t}{1.6} \qquad k = \frac{S_R}{1.6}$$

Where:

E_t = Specified minimum lower yield or 0.2 percent proof stress at the design temperature.

R_{20} = Specified minimum tensile strength at ambient temperature obtained from Table VI 2-9.

S_R = Average stress to produce rupture in 100,000 hours at the design temperature.

2.2.6 Permissible stress k for copper and copper alloy pipes

The permissible stress for copper and copper alloy pipes to be considered in formula of 2.2.2 is to be taken from Table VI 2-10, depending upon design temperature.

2.2.7 Scupper, discharge pipes and venting pipes

The minimum wall thicknesses are recommended:

(a) For scupper and discharge pipes, where substantial thickness is not required, and for venting pipes other than specified under (c):
   (i) external diameter of pipes equal to or less than 155.0 mm: thickness not less than 4.5 mm
   (ii) external diameter of pipes equal to or more than 230.0 mm: thickness not less than 6.0 mm
   (iii) intermediate sizes are to be determined by linear interpolation.

(b) For scupper and discharge pipes, where substantial thickness is required:
   (i) external diameter of pipes equal to or less than 80 mm: thickness not less than 7.0 mm
   (ii) external diameter of pipes 180 mm: thickness not less than 10.0 mm
   (iii) external diameter of pipes equal to or more than 220 mm: thickness not less than 12.5 mm
   (iv) intermediate sizes are to be determined by linear interpolation.

(c) For venting pipes in position 1 and 2 leading to spaces below the freeboard deck or to spaces within enclosed superstructures:
   (i) external diameter of pipes equal to or less than 80 mm: thickness not less than 6.0 mm
   (ii) external diameter of pipes equal to or more than 165 mm: thickness not less than 8.5 mm
   (iii) intermediate sizes are to be determined by linear interpolation.

2.3 Materials

2.3.1 Materials used for various pipes, valves and fittings are to comply with the requirements of Part XI, or such other appropriate material specifications as may be approved in connection with a particular design.

2.3.2 Pipes intended for use in Class I and II piping systems are to be tested and inspected in the presence of the Surveyor in accordance with the requirements of Part XI.

2.3.3 Where nominal bores exceed 100 mm, the following valves and fittings are to be tested and inspected in the presence of the Surveyor in accordance with the requirements of Part XI.

(a) Valves and fittings in Class-I and -II piping systems.

(b) Valves and connections to the ship's shell and collision bulkhead below the freeboard deck.

2.3.4 Pipes, valves and fittings other than specified in 2.3.2 and 2.3.3 above may not be tested in the presence of the Surveyor provided the appropriate material specifications of other recognized standards have been considered as suitable for the intended use. The submission of manufacture's test results may, however, be required by the Surveyor.

Table VI 2-3
Minimum Wall Thickness for Steel Pipes (All dimensions in mm)

External diameter D (mm)	**A** Pipes in general	**B** Venting, overflow and sounding pipe for integral tanks	**C** Bilge, ballast and general sea water pipes	**D** Bilge, ballast, vent, overflow and sounding pipes passing through fuel tank. Bilge, vent, overflow, sounding and fuel pipes passing through ballast tanks.
10.2 – 12.0	1.6			
13.5 – 19.3	1.8			
20.0	2.0			
21.3 – 25.0	2.0		3.2	
26.9 – 33.7	2.0		3.2	
38.0 – 44.5	2.0	4.5	3.6	6.3
48.3	2.3	4.5	3.6	6.3
51.0 – 63.5	2.3	4.5	4.0	6.3
70.0	2.6	4.5	4.0	6.3
76.1 – 82.5	2.6	4.5	4.5	6.3
88.9 – 108.0	2.9	4.5	4.5	7.1
114.3 – 127.0	3.2	4.5	4.5	8.0
133.0 – 139.7	3.6	4.5	4.5	8.0
152.4 – 168.3	4.0	4.5	4.5	8.8
177.8	4.5	5.0	5.0	8.8
193.7	4.5	5.4	5.4	8.8
219.1	4.5	5.9	5.9	8.8
244.5 – 273.0	5.0	6.3	6.3	8.8
298.5 – 368.0	5.6	6.3	6.3	8.8
406.4 – 457.2	6.3	6.3	6.3	8.8

Notes:

(1) The nominal sizes, pipe diameters and wall thicknesses given in the table are many of the common sizes based on international standards. Notwithstanding the requirements of Table VI 2-3 of this Chapter, diameter and thickness according to other national or international standards may be accepted.

(2) Where pipes and any integral pipe joints are protected against corrosion by means of coating, lining etc. at the discretion of the Society, the thickness may be reduced by not more than 1.0 mm.

(3) For sounding pipes, except those for flammable cargoes, the minimum wall thickness in column B is intended to apply only to the part outside the tank.

(4) The minimum thicknesses listed in this table are the nominal wall thickness. No allowance needs to be made for negative tolerance or for reduction in thickness due to bending.

(5) For threaded pipes, where allowed, the minimum wall thickness is to be measured at the bottom of the thread.

(6) The minimum wall thickness for bilge lines and ballast lines through deep tanks will be subject to special consideration by the Society. The minimum wall thickness for ballast lines through cargo oil tanks is not to be less than that specified by Table VI 2-8 of this Chapter.

(7) The minimum wall thickness for pipes larger than 450mm nominal size is to be in accordance with a national or international standard and in any case not less than the minimum wall thickness of the appropriate column indicated for 450 mm pipe size.

(8) The minimum internal diameter for bilge, sounding, venting and overflow pipes shall be:

Bilge	50 mm bore
Sounding	32 mm bore
Venting and overflow	50 mm bore

(9) For minimum wall thickness of steel pipes for CO_2 fire extinguishing system, refer to Table VI 2-4 of this Chapter.

(10) For minimum wall thickness of copper and copper alloy pipes, refer to Table VI 2-5 of this Chapter.

(11) For minimum wall thickness of aluminum and aluminum alloy pipes, refer to Table VI 2-6 of this Chapter.

(12) For minimum wall thickness of austenitic stainless steel pipes, refer to Table VI 2-7 of this Chapter.

(13) The minimum wall thickness for cargo oil lines and exhaust gas pipe will be subject to special consideration by the Society.

Table VI 2-4
Minimum Wall Thickness for Steel Pipes for CO_2 Fire Extinguishing

External diameter D (mm)	From bottles to distribution station	From distribution station to nozzles
21.3 – 26.9	3.2	2.6
30.0 – 48.3	4.0	3.2
51.0 – 60.3	4.5	3.6
63.5 – 76.1	5.0	3.6
82.5 – 88.9	5.6	4.0
101.6	6.3	4.0

Notes:

(1) Pipes are to be galvanized at least inside, except those fitted in the engine room where galvanizing may not be required at the discretion of the Society.

(2) For thread pipes, where allowed, the minimum wall thickness is to be measured at the bottom of the thread.

(3) The external diameters and thickness have been selected from ISO Recommendations R336 for smooth welded and seamless steel pipes. Diameters and thicknesses according to national or international standards may be accepted.

(4) For large diameters the minimum wall thickness will be subject to special consideration by the Society.

(5) In general the minimum wall thickness is the nominal wall thickness and no allowance needs be made for negative tolerance or for reduction in thickness due to bending.

Table VI 2-5
Minimum Wall Thickness for Copper and Copper Alloy Pipes

External diameter D (mm)	Copper	Copper Alloy
8.0 – 10.0	1.0	0.8
12.0 – 20.0	1.2	1.0
25.0 – 44.5	1.5	1.2
50.0 – 76.1	2.0	1.5
88.9 – 108	2.5	2.0
133.0 – 159.0	3.0	2.5
193.7 – 267.0	3.5	3.0
273.0 – 457.2	4.0	3.5

Notes:

(1) The external diameters and the thickness have been selected from ISO Standards.

(2) Diameters and thicknesses according to national or international standards may be accepted.

Table VI 2-6
Minimum Wall Thickness for Aluminum and Aluminum Alloy Pipes

External diameter D (mm)	Minimum wall thickness (mm)
0 – 10	1.5
12 – 38	2.0
43 – 57	2.5
76 – 89	3.0
108 – 133	4.0
159 – 194	4.5
219 – 273	5.0
above 273	5.5

Notes:

(1) Diameters and thicknesses according to national or international standards may be accepted. A different thickness may be considered by the Society.

(2) For sea water pipes, the minimum thickness is not to be less than 5 mm.

Table VI 2-7
Minimum Wall Thickness for Austenitic Stainless Steel Pipes

External Diameter D (mm)	Minimum Wall Thickness (mm)
10.2 – 17.2	1.0
21.3 – 48.3	1.6
60.3 – 88.9	2.0
114.3 – 168.3	2.3
219.1	2.6
273.0	2.9
323.9 – 406.4	3.6
Over 406.4	4.0

Note: Diameters and thicknesses according to national or international standards may be accepted.

Table VI 2-8
Minimum Wall Thickness for Ballast Pipes Passing Through Cargo Oil Tanks

Nominal Diameter D (mm)	Minimum Wall Thickness (mm)
50	6.3
100	8.6
125	9.5
150	11.0
200 and above	12.5

Notes: The thicknesses shown in the above table refer to carbon steel.

Table VI 2-9
Permissible Stress Limits k for Carbon and Carbon-Manganese Steel Pipes

Specified Minimum Tensile Strength N/mm^2	Maximum Permissible Stress (N/mm^2)												
	Maximum Design Temperature (°C)												
	50	100	150	200	250	300	350	400	410	420	430	440	450
320	107	105	99	92	78	62	57	55	55	54	54	54	49
360	120	117	110	103	91	76	69	68	68	68	64	56	49
410	136	131	124	117	106	93	86	84	79	71	64	56	49
460	151	146	139	132	122	111	101	99	98	85	73	62	53
490	160	156	148	141	131	121	111	109	98	85	73	62	53

Table VI 2-10
Permissible Stress Limits k for Copper and Copper Alloys

Pipe Material		Copper	Aluminum Brass	Copper Nickel Cu Ni 5 Fe 1 Mn Cu Ni 10 Fe 1 Mn	Copper Nickel Cu Ni 30
Material Condition		Annealed	Annealed	Annealed	Annealed
Minimum Tensile Strength (N/mm^2)		215.0	325.0	275.0	365.0
Permissible Stress, k (N/mm^2)	50 °C	41.0	78.0	68.0	81.0
	75 °C	41.0	78.0	68.0	79.0
	100 °C	40.0	78.0	67.0	77.0
	125 °C	40.0	78.0	65.5	75.0
	150 °C	34.0	78.0	64.0	73.0
	175 °C	27.5	51.0	62.0	71.0
	200 °C	18.5	24.5	59.0	69.0
	225 °C	–	–	56.0	67.0
	250 °C	–	–	52.0	65.5
	275 °C	–	–	48.0	64.0
	300 °C	–	–	44.0	62.0

Notes:
(1) Intermediate values may be determined by linear interpolation.
(2) For materials not included in the Table, the permissible stress is to be specially considered by the Society.

2.4 Steel Pipes, Valves and Other Fittings

2.4.1 Steel piping is required for fuel oil lines and for all pipes passing through fuel oil tanks.

2.4.2 Carbon steel pipes may be used where the design temperature does not exceed 400°C. When the temperature exceeds 400°C the use of low alloy steel is to be required.

2.4.3 Seamless steel pipes may be used for all purposes.

2.4.4 Electric resistance welded steel pipes may be used for design pressures up to 2 MPa and for design temperatures up to 350°C. However, where the pipes are used under the room temperature, no limitation is placed on working pressures.

2.4.5 Commercial gas pipes, unless otherwise specified, may be used for design pressures up to 1 MPa.

2.4.6 In any system, forged or cast steel may be used in the construction of valves and fittings for all pressures and temperatures.

2.5 Copper and Copper Alloy Pipes, Valves and Other Fittings

2.5.1 Copper pipes for Class I and II are to be seamless.

2.5.2 In general, the maximum permissible service temperatures of copper and copper alloy pipes, valves and other fittings are not to exceeding 200°C for copper and aluminum brass, and 300°C for copper-nickel.

2.5.3 Cast bronze suitable for high temperature services may be accepted in general up to 260°C.

2.6 Nodular Cast Iron Pipes, Valves and Other Fittings

2.6.1 Nodular cast iron of the ferric type according to the material rules of the Society may be accepted for bilge, ballast and cargo oil piping within double bottom or cargo tanks, or other locations to the Society satisfaction.

2.6.2 Ferrite nodular cast iron pipes, valves and other fittings may be accepted for media having temperature not exceeding 350°C.

2.6.3 The use of this material for pipes, valves and other fittings for other services, in principle Class I and II, will be subject to special consideration.

2.6.4 Nodular cast iron pipes, valves fitted on the ship's side are to have specified properties to the Society satisfaction, according to the intention of Regulation 22 of The International Convention on Load Lines 1966.

2.7 Ordinary Cast Iron Pipes, Valves and Other Fittings

2.7.1 Ordinary cast iron pipes, valves and other fittings may be accepted in principle Class III at the Society's judgment.

2.7.2 Ordinary cast iron pipe may be accepted for ballast lines and cargo oil pipe lines within cargo tanks of tankers, except for clean ballast lines to forward tanks through cargo oil tanks.

2.7.3 Ordinary cast iron is not to be used for pipes, valves and other fittings handling media having temperature above 220°C and for piping subject to pressure shock, excessive strains and vibrations.

2.7.4 Ordinary cast iron pipe may be accepted for pressures up to 16 bar for cargo oil pipelines on weather decks of oil tankers except for manifolds and their valves and fittings connected to cargo handling hoses.

2.7.5 Ordinary cast iron is not to be used for sea valves and pipes fitted on shipsides, and for valves fitted on the collision bulkhead.

2.7.6 The use of ordinary cast iron for other services will be subject to special consideration in each case.

2.8 Plastic Pipes

2.8.1 General

(a) These requirements are applicable to plastic pipes/piping systems on ships.

(b) The requirements are not applicable to mechanical joints and flexible couplings used in metallic piping systems.

(c) Piping systems made of thermoplastic materials, such as polyethylene(PE), polypropylene(PP), polybutylene(PB) and intended for non-essential services are to meet the requirements of recognized standards and provisions stipulated in 2.8.5 and 2.8.6.

2.8.2 Definition

(a) "Plastic(s)" means both thermoplastic and thermosetting plastic materials with or without reinforcement, such as PVC and fibre reinforced plastics - FRP. Plastic includes synthetic rubber and materials of similar thermo/mechanical properties.

(b) "Joint" means joining pipes by adhesive bonding, laminating, welding, etc.

(c) "Fittings" means bends, elbows, fabricated branch pieces etc. of plastic materials.

(d) "FTP Code" means the International Code for Application of Fire Test Procedures as adopted by IMO Resolution.

2.8.3 Design requirements

(a) Strength

(i) The strength of the pipes is to be determined by a hydrostatic test failure pressure of a pipe specimen under the standard conditions:

(1) Atmospheric pressure 100kPa

(2) Relative humidity 30%

(3) Fluid temperature 25°C

(ii) The strength of fittings and joints is to be not less than that of the pipes.

(iii) The nominal pressure is to be determined from the following conditions:

(1) Internal Pressure
For an internal pressure the following is to be taken whichever is smaller:

$$P_{int} \leq \frac{P_{sth}}{4} \quad \text{or} \quad P_{int} \leq \frac{P_{lth}}{2.5}$$

where
P_{sth} = Short-term hydrostatic test failure pressure
P_{lth} = Long-term hydrostatic test failure pressure (> 100,000 h)

(2) External Pressure
For an external pressure:

$$P_{ext} \leq \frac{P_{col}}{3}$$

where
P_{col} = Pipe collapse pressure

(iv) In no case is the collapse pressure to be less than 3 bar.

(v) The maximum working external pressure is a sum of the vacuum inside the pipe and a head of liquid acting on the outside of the pipe.

(vi) The maximum permissible working pressure is to be specified with due regard for maximum possible working temperatures in accordance with manufacturer's recommendations.

(b) Axial Strength

(i) The sum of the longitudinal stresses due to pressure, weight and other loads is not to exceed the allowable stress in the longitudinal direction.

(ii) In the case of FRP pipes, the sum of the longitudinal stresses is not to exceed half of the nominal circumferential stress derived from the nominal internal pressure condition (refer to 2.8.3(a)).

(c) Impact Resistance

(i) Plastic pipes and joints are to have a minimum resistance to impact in accordance with recognized national or international standards such as ASTM D2444 or equivalent.

(ii) After the test the specimen is to be subjected to hydrostatic pressure equal to 2.5 times the design pressure for at least 1 hour.

(d) Temperature

(i) The permissible working temperature depending on the working pressure is to be in accordance with manufacturer's recommendations, but in each case it is to be at least 20ºC lower than the minimum heat distortion temperature of the pipe material, determined according to ISO 75 method A, or equivalent.

(ii) The minimum heat distortion temperature is to be not less than 80ºC.

2.8.4 Requirements for pipes/piping systems depending on service and/or locations

(a) Fire endurance

(i) Pipes and their associated fittings whose integrity is essential to the safety of ships are required to meet the minimum fire endurance requirements of Appendix 1 or 2, as applicable, of IMO Resolution A.753(18), as amended.

(ii) Depending on the capability of a piping system to maintain its strength and integrity, there exist three different levels of fire endurance for piping systems.

(1) Level 1. Piping having passed the fire endurance test specified in Appendix 1 of IMO Resolution A.753(18), as amended, for a duration of a minimum of one hour without loss of integrity in the dry condition is considered to meet level 1 fire endurance standard(L1).

(2) Level 2. Piping having passed the fire endurance test specified in Appendix 1 of IMO Resolution A.753(18), as amended, for a duration of a minimum of 30 minutes in the dry condition is considered to meet level 2 fire endurance standard (L2).

(3) Level 3. Piping having passed the fire endurance test specified in Appendix 2 of IMO Res. A.753 (18), as amended, for a duration of a minimum of 30 minutes in the wet condition is considered to meet level 3 fire endurance standard (L3).

(iii) Permitted use of piping depending on fire endurance, location and piping system is given in Table VI 2-11.

Table VI 2-11
Fire Endurance Requirements Matrix

PIPING SYSTEM		LOCATION										
		A	B	C	D	E	F	G	H	I	J	K
CARGO (Flammable cargoes with flash point ≤ 60°C)												
1	Cargo lines	NA	NA	L1	NA	NA	0	NA	0(10)	0	NA	L1(2)
2	Crude oil washing lines	NA	NA	L1	NA	NA	0	NA	0(10)	0	NA	L1(2)
3	Vent lines	NA	NA	NA	NA	NA	0	NA	0(10)	0	NA	X
INERT GAS												
4	Water seal effluent lines	NA	NA	0(1)	NA	NA	0(1)	0(1)	0(1)	0(1)	NA	0
5	Scrubber effluent lines	0(1)	0(1)	NA	NA	NA	NA	NA	0(1)	0(1)	NA	0
6	Main lines	0	0	L1	NA	NA	NA	NA	NA	0	NA	L1(6)
7	Distribution lines	NA	NA	L1	NA	NA	0	NA	NA	0	NA	L1(2)
FLAMMABLE LIQUIDS(flash point > 60°C)												
8	Cargo lines	X	X	L1	X	X	NA(3)	0	0(10)	0	NA	L1
9	Fuel oil	X	X	L1	X	X	NA(3)	0	0	0	L1	L1
10	Lubricating oil	X	X	L1	X	X	NA	NA	NA	0	L1	L1
11	Hydraulic oil	X	X	L1	X	X	0	0	0	0	L1	L1
SEA WATER(1)												
12	Bilge main & branches	L1(7)	L1(7)	L1	X	X	NA	0	0	0	NA	L1
13	Fire main and water spray	L1	L1	L1	X	NA	NA	NA	0	0	X	L1
14	Foam system	L1	L1	L1	NA	NA	NA	NA	NA	0	L1	L1
15	Sprinkler system	L1	L1	L3	X	NA	NA	NA	0	0	L3	L3
16	Ballast	L3	L3	L3	L3	X	0(10)	0	0	0	L2	L2
17	Cooling water, essential services	L3	L3	NA	NA	NA	NA	NA	0	0	NA	L2
18	Tank cleaning services fixed machines	NA	NA	L3	NA	NA	0	NA	0	0	NA	L3(2)
19	Non-essential systems	0	0	0	0	0	NA	0	0	0	0	0
FRESH WATER												
20	Cooling water, essential services	L3	L3	NA	NA	NA	NA	0	0	0	L3	L3
21	Condensate return	L3	L3	L3	0	0	NA	NA	NA	0	0	0
22	Non-essential systems	0	0	0	0	0	NA	0	0	0	0	0
SANITARY/ DRAINS/ SCUPPERS												
23	Deck drains (internal)	L1(4)	L1(4)	NA	L1(4)	0	NA	0	0	0	0	0
24	Sanitary drains (internal)	0	0	NA	0	0	NA	0	0	0	0	0
25	Scuppers and discharges (overboard)	0(1),(8)	0(1),(8)	0(1),(8)	0(1),(8)	0(1),(8)	0	0	0	0	0(1),(8)	0
SOUNDING/AIR												
26	Water tanks/ dry spaces	0	0	0	0	0	0(10)	0	0	0	0	0
27	Oil Tanks (flash point > 60°C)	X	X	X	X	X	X(3)	0	0(10)	0	X	X
MISCELLANEOUS												
28	Control air	L1(5)	L1(5)	L1(5)	L1(5)	L1(5)	NA	0	0	0	L1(5)	L1(5)
29	Service air (non-essential)	0	0	0	0	0	NA	0	0	0	0	0
30	Brine	0	0	NA	0	0	NA	NA	NA	0	0	0
31	Auxiliary low pressure steam (pressure ≤ 7 bar)	L2	L2	0(9)	0(9)	0(9)	0	0	0	0	0(9)	0(9)

Notes:

(1) Where non-metallic piping is used, remotely controlled valves to be provided at ship's side (valve is to be controlled from outside space).

(2) Remote closing valves to be provided at the cargo tanks.

(3) When cargo tanks contain flammable liquids with flash point > 60°C, "0" may replace "NA" or "X".

(4) For drains serving only the space concerned, "0" may replace "L1".

(5) When controlling functions are not required by statutory requirements or guidelines, "0" may replace "L1".

(6) For pipe between machinery space and deck water seal, "0" may replace "L1".

(7) For passenger vessels, "X" is to replace "L1".

(8) Scuppers serving open decks in positions 1 and 2, as defined in regulation 13 of the International Convention on Load Lines, 1966, are to be "X" throughout unless fitted at the upper end with the means of closing capable of being operated from a position above the freeboard deck in order to prevent downflooding.

(9) For essential services, such as fuel oil tank heating and ship's whistle, "X" is to replace "0".

(10) For tankers where compliance with regulation 19.3.6 of Annex I of MARPOL is required, "NA" is to replace "0".

Location:

A	Machinery spaces of category A
B	Other machinery spaces & pump rooms
C	Cargo pump rooms
D	Ro/Ro cargo holds
E	Other dry cargo holds
F	Cargo tanks
G	Fuel oil tanks
H	Ballast water tanks
I	Cofferdams, void spaces, pipe tunnel & ducts
J	Accommodation service & control spaces
K	Open decks

Abbreviations:

L1	Fire endurance test in dry conditions, 60 min
L2	Fire endurance test in dry conditions, 30 min
L3	Fire endurance test in wet conditions, 30 min
0	No fire endurance test required
NA	Not applicable
X	Metallic materials having a melting point greater than 925ºC

(b) Flame spread

All pipes, except those fitted on open decks and within tanks, cofferdams, pipe tunnels, and ducts are to have low surface flame spread characteristics not exceeding average values listed in the FTP Code, Annex 1, Part 5.

(c) Fire protection coatings

Where a fire protective coating of pipes and fittings is necessary for achieving the fire endurance level required, it is to meet the following requirements:

(i) The pipes are generally to be delivered from the manufacturer with the protective coating on.

(ii) The fire protection properties of the coating are not to be diminished when exposed to salt water, oil or bilge slops. It is to be demonstrated that the coating is resistant to products likely to come into contact with the piping.

(iii) In considering fire protection coatings, such characteristics as thermal expansion, resistance against vibrations, and elasticity are to be taken into account.

(iv) The fire protection coatings are to have sufficient resistance to impact to retain their integrity.

(d) Electrical conductivity

(i) Piping conveying fluids with a conductivity of less than 1000 pico-siemens per meter is to be electrically conductive.

(ii) Regardless of the fluid being conveyed, plastic piping is to be electrically conductive if the piping passes through a hazardous area.

(iii) Pipes and fittings with layers having different conductivity are to be protected against the possibility of spark damage to the pipe wall.

(iv) Where electrical conductivity is to be ensured, the resistance of the pipes and fittings is not to exceed 0.1 MΩ/m.

(e) Durability against chemicals

The pipes are to be resistant to any chemical substances they might possibly contact with during service.

2.8.5 Installation

(a) Supports

(i) Selection and spacing of pipe supports in shipboard systems are to be determined as a function of allowable stresses and maximum deflection criteria. Support spacing is not to be greater than the pipe manufacturer's recommended spacing. The selection and spacing of pipe supports are to take into account pipe dimensions, mechanical and physical properties of the pipe material, mass of pipe and contained fluid, external pressure, operating temperature, thermal expansion effects, loads due to external forces, thrust forces, water hammer, vibrations, maximum accelerations to which the system may be subjected. Combination of loads is to be considered.

(ii) Each support is to evenly distribute the load of the pipe and its contents over the full width of the support. Measures are to be taken to minimize wear of the pipes where they contact the supports.

(iii) Heavy components in the piping system such as valves and expansion joints are to be independently supported.

(b) Expansion

(i) Suitable provision is to be made in each pipeline to allow for relative movement between pipes made of plastic and the steel structure, having due regard to:

(1) the difference in the coefficients of thermal expansion;

(2) deformations of the ship's hull and its structure.

(ii) When calculating the thermal expansions, account is to be taken of the system working temperature and the temperature at which assembly is performed.

(c) External loads

(i) When installing the piping, allowance is to be made for temporary point loads, where applicable. Such allowances are to include at least the force exerted by a load (person) of 100 kg at mid-span on any pipe of more than 100 mm nominal outside diameter.

(ii) Pipes are to be protected from mechanical damage where necessary.

(d) Strength of connections

(i) The strength of connections is to be not less than that of the piping system in which they are installed.

(ii) Pipes may be assembled using adhesive-bonded, welded, flanged or other joints.

(iii) Adhesives, when used for joint assembly, are to be suitable for providing a permanent seal between the pipes and fittings throughout the temperature and pressure range of the intended application.

(iv) Tightening of joints is to be performed in accordance with manufacturer's instructions.

(e) Installation of conductive pipes

In case where pipes are required to be electrically conductive as specified in 2.8.4(d), installations of the pipes are to be in accordance with the following provisions.

(i) The resistance to earth from any point in the piping system is not to exceed 1.0 MΩ/m.

(ii) After completion of the installation, the resistance to earth is to be verified. Earthing wires are to be accessible for inspection.

(f) Application of fire protection coatings

(i) Fire protection coatings are to be applied on the joints, where necessary for meeting the required fire endurance as for 2.8.4(c), after performing hydrostatic pressure tests of the piping system.

(ii) The fire protection coatings are to be applied in accordance with manufacturer's recommendations, using a procedure approved in each particular case.

(g) Penetration of divisions

(i) Where plastic pipes pass through "A" or "B" class divisions, arrangements are to be made to ensure that the fire endurance is not impaired. These arrangements are to be tested in accordance with IMO

Resolution A.754(18) Recommendation on Fire Resistance Tests for "A", "B" and "F" Class Divisions, as amended.

(ii) When plastic pipes pass through watertight bulkheads or decks, the watertight integrity of the bulkhead or deck is to be maintained.

(iii) If the bulkhead or deck is also a fire division and destruction by fire of plastic pipes may cause the inflow of liquid from tanks, a metallic shut-off valve operable from above the freeboard deck should be fitted at the bulkhead or deck.

(h) Control during installation

(i) Installation is to be in accordance with the manufacturer's guidelines.

(ii) Prior to commencing the work, joining techniques are to be approved by the Society.

(iii) The personnel performing this work are to be properly qualified and certified to the satisfaction of the Society.

(iv) The tests and explanations specified in section 2.8 are to be completed before shipboard piping installation commences.

(i) Bonding procedure quality testing

(i) The procedure of making bonds is to include:

(1) materials used,

(2) tools and fixtures,

(3) joint preparation requirements,

(4) cure temperature,

(5) dimensional requirements and tolerances, and

(6) tests acceptance criteria upon completion of the assembly.

(ii) The test assembly is to be fabricated in accordance with the procedure to be qualified and it is to consist of at least one pipe-to-pipe joint and one pipe-to-fitting joint.

(iii) When the test assembly has been cured, it is to be subjected to a hydrostatic test pressure at a safety factor 2.5 times the design pressure of the test assembly, for not less than one hour. No leakage or separation of joints is allowed. The test is to be conducted so that the joint is loaded in both longitudinal and circumferential directions.

(iv) Selection of the pipes used for test assembly, is to be in accordance with the following:

(1) When the largest size to be joined is 200 mm nominal outside diameter, or smaller, the test assembly is to be the largest piping size to be joined.

(2) When the largest size to be joined is greater than 200 mm nominal outside diameter, the size of the test assembly is to be either 200 mm or 25% of the largest piping size to be joined, whichever is greater.

(v) When conducting performance qualifications, each bonder and each bonding operator are to make up test assemblies, the size and number of which are to be as required above.

(vi) Any change in the bonding procedure which will affect the physical and mechanical properties of the joint is to require the procedure to be re-qualified.

2.8.6 Shop tests

(a) Plastic pipes are to be subjected to the following tests and measurements of dimension after they have been manufactured. The number of test specimens, testing procedures, results, procedures of measurement of dimension and tolerance are to comply with the internal standards of manufacturers that have been approved by the Society.

(i) Tensile tests

(ii) Hydrostatic tests at a pressure not less than 1.5 times the maximum allowable internal pressure of the pipe in 2.8.3 or hydrostatic tests stipulated in standards considered equivalent by the Society.

(iii) Outside diameter and wall thickness measurements

(iv) Ascertainment of uniform quality and the presence of no harmful defects

(v) Electric conductivity test (only for those pipes which require electric conductivity in accordance with 2.8.4(d))

(b) For tests and measurements specified in (a), in cases where the manufacturer has been approved by the Society, the requirements that items be tested in the presence of the Surveyor may be reduced. In such cases, the Society's Surveyor may require submission of all relevant test results instead.

(c) Plastic pipes which have been connected by adhesive bonding, laminating, welding, etc. are to be subjected to hydrostatic tests after completion of all fabrication processes at pressures of 1.5 times design pressures. These tests may be carried out after installation on board.

(d) Notwithstanding the requirements specified in (a) above, the Society may request hydrostatic tests for all plastic pipes at a higher pressure taking into consideration the pipe service conditions.

2.8.7 Testing after installation on board

For testing after installation on board of plastic piping systems, reference is made to chapter 7 of this Part.

2.8.8 Plans and data to be submitted

The following information for the plastic pipes, fittings and joints is to be submitted for consideration and approval before the work concerned is proceeded:

(a) General information
- (i) Pipe and fitting dimensions
- (ii) Maximum internal and external working pressure
- (iii) Working temperature range
- (iv) Intended services and installation locations
- (v) The level of fire endurance
- (vi) Electrically conductive
- (vii) Intended fluids
- (viii) Limits on flow rates
- (ix) Serviceable life
- (x) Installation instructions
- (xi) Details of marking

(b) Drawings and supporting documentation:
- (i) Certificates and reports for relevant tests previously carried out.
- (ii) Details of relevant standards.
- (iii) All relevant design drawings, catalogues, data sheets, calculations and functional descriptions.
- (iv) Fully detailed sectional assembly drawings showing pipe, fittings and pipe connections.
- (v) Documentation verifying the certification of the manufacturer's quality system and that the system address the testing requirements in section 2.8.3 and 2.8.4 of this Chapter.

(c) Materials
- (i) The resin type.
- (ii) Catalyst and accelerator types, and concentration employed in the case of reinforced polyester resin pipes or hardeners where epoxide resins are employed.
- (iii) A statement of all reinforcements employed where the reference number does not identify the mass per unit area or the strand count(Tex System or Yardage System) of a roving used in a filament winding process, these are to be detailed.
- (iv) Full information regarding the type of gel-coat or thermoplastic liner employed during construction, as appropriate.

(v) Cure/post-cure conditions. The cure and post cure temperatures and times employed for given resin/reinforcement ratio.

(vi) Winding angle and orientation.

(vii) Joint bonding procedures and qualification tests results, refer to 2.8.5(i).

2.8.9 Miscellaneous

(a) In cases where GRP pipes are used as drain pipes from scrubbers and blower casings of inert gas systems, the requirements in Guidelines for Inert Gas Systems of IMO are to be complied with.

(b) In cases where plastic pipes are to be installed in external areas, such pipes shall either be specifically approved for external use or be protected against ultraviolet radiation.

(c) After installation on board, plastic pipes are to be easily distinguishable from pipes made of other materials.

2.9 Flexible Hoses

2.9.1 Definition

Flexible hose assembly means a short length of metallic or non-metallic hose normally with prefabricated end fittings ready for installation.

2.9.2 Scope

(a) The requirements of 2.9.3 to 2.9.6 apply to flexible hoses of metallic or non-metallic material intended for a permanent connection between a fixed piping system and items of machinery. The requirements may also be applied to temporary connected flexible hoses or hoses of portable equipment.

(b) Flexible hose assemblies as defined in 2.9.1 may be used for the following pipes:

(i) Fuel oil pipes (except high pressure fuel oil injection pipes)

(ii) Lubricating oil pipes

(iii) Hydraulic and thermal oil pipes

(iv) Fresh water and sea water cooling pipes

(v) Compressed air pipes

(vi) Bilge and ballast pipes

(vii) Class III steam pipes (metallic pipes only)

(viii) Exhaust gas pipes (metallic pipes only)

(c) These requirements for flexible hose assemblies are not applicable to hoses intended to be used in fixed fire extinguishing systems.

2.9.3 Design and construction

(a) Flexible hoses are to be designed and constructed in accordance with recognized National or International standards acceptable to the Society. Flexible hoses constructed of rubber materials and intended for use in bilge, ballast, compressed air, oil fuel, lubricating, hydraulic and thermal oil systems are to incorporate a single, double or more, closely woven integral wire braid or other suitable material reinforcement.

(b) Where rubber or plastics materials hoses are to be used in oil supply lines to burners, the hoses are to have external wire braid protection in addition to the reinforcement mentioned above.

(c) The end fittings of flexible hose assemblies are to have flanges or to comply with 2.10.1 or 2.10.2.

(d) The use of hose clamps and similar types of end attachments is not acceptable for flexible hoses in piping systems for steam, flammable media, starting air systems or for sea water systems where failure may result in flooding. In other piping systems, the use of hose clamps may be accepted where the working pressure is less than 0.5 MPa and provided there are double clamps at each end connection.

(e) Flexible hose assemblies intended for installation in piping systems where pressure pulses and/or high levels of vibration are expected to occur in service, are to be designed for the maximum expected impulse peak pressure and forces due to vibration. The tests required by 2.9.5 are to take into consideration the maximum anticipated in-service pressures, vibration frequencies and forces due to installation.

(f) Flexible hose assemblies constructed of non-metallic materials intended for installation in piping systems for flammable media and sea water systems where failure may result in flooding, are to be of a fire-resistant type except in cases where such hoses are installed on exposed open decks. Fire resistance is to be demonstrated by testing to ISO 15540 and ISO 15541.

(g) Flexible hose assemblies are to be selected for the intended location and application taking into consideration ambient conditions, compatibility with fluids under working pressure and temperature conditions consistent with the manufacturer's instructions and any requirements of the Society.

2.9.4 Installation

(a) In general, flexible hoses are to be limited to a length necessary to provide for relative movement between fixed and flexibly mounted items of machinery/equipment or systems.

(b) Flexible hose assemblies are not to be installed where they may be subjected to torsion deformation (twisting) under normal operating conditions.

(c) The number of flexible hoses in piping systems is to be kept to minimum.

(d) Where flexible hoses are intended to be used in piping systems conveying flammable fluids that are in close proximity of heated surfaces the risk of ignition due to failure of the hose assembly and subsequent release of fluids is to be mitigated as far as practicable by the use of screens or other similar protection to the satisfaction of the Society.

(e) Flexible hoses are to be installed in clearly visible and readily accessible locations.

(f) The installation of flexible hose assemblies is to be in accordance with the manufacturer's instructions and use limitations with particular attention to the following:

(i) Orientation

(ii) End connection support (where necessary)

(iii) Avoidance of hose contact that could cause rubbing and abrasion

(iv) Minimum bend radii

2.9.5 Tests

(a) Acceptance of flexible hose assemblies is subject to satisfactory prototype testing. Prototype test programs for flexible hose assembles are to be submitted by the manufacturer and are to be sufficiently detailed to demonstrate performance in accordance with the specified standards.

(b) The tests are, as applicable, to be carried out on different nominal diameters of hose type complete with end fittings for pressure, burst, impulse resistance and fire resistance in accordance with the requirements of the relevant standard.

(c) All flexible hose assemblies are to be satisfactorily prototype burst tested to an international standard* to demonstrate they are able to withstand a pressure not less than four times its design pressure without indication of failure or leakage.

Note:
* The international standards, e.g. EN or SAE for burst testing of non-metallic hoses, require the pressure to be increased until burst without any holding period at 4 × MWP.

2.9.6 Marking

(a) Flexible hoses are to be permanently marked by the manufacturer with the following details:
  (i) Hose manufacturer's name or trademark;
  (ii) Date of manufacture (month/year);
  (iii) Designation type reference;
  (iv) Nominal diameter;
  (v) Pressure rating;
  (vi) Temperature rating.

(b) Where a flexible hose assembly is made up of items from different manufacturers, the components are to be clearly identified and traceable to evidence of prototype testing.

2.10 Pipe Joints

2.10.1 Mechanical joint

(a) Mechanical joints are to be of approved type and adequate for the service conditions and the intended application. The construction and type are to conform to the examples in Fig. VI 2-1 according to their classified division of application shown in Table VI 2-12 and Table VI 2-13.

(b) Mechanical joints, which in the event of damage could cause fire or flooding, are not to be used in piping sections directly connected to the sea openings or tanks containing flammable fluids.

(c) Piping in which a mechanical joint is fitted is to be adequately adjusted, aligned and supported. Supports or hangers are not to be used to force alignment of piping at the point of connection.

(d) Slip-on joints are not to be used inside tanks except use for the same media in the tanks. Unrestrained slip-on joints are to be used only in cases where compensation of lateral pipe deformation is necessary. Usage of these joints as the main means of pipe connection in not permitted.

(e) Where the application of mechanical joints results in reduction in pipe wall thickness due to the use of bite type rings or other structural elements, this is to be taken into account in determining the minimum wall thickness of the pipe to withstand the design pressure.

(f) Construction of mechanical joints is to prevent the possibility of tightness failure affected by pressure pulsation, piping vibration, temperature variation and other similar adverse effects occurring during operation on board.

(g) Material of mechanical joints is to be compatible with the piping material and internal and external medial.

(h) The mechanical joints are to be designed to withstand internal and external pressure as applicable and where used in suction lines are to be capable of operating under vacuum.

Pipe Unions	
Welded and Brazed Types	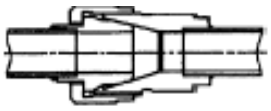
Compression Couplings	
Swage Type	
Press Type	
Bite Type	
Flared Type	
Slip-on Joints	
Grip Type	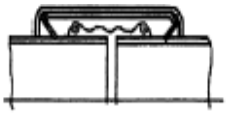
Machine Grooved Type	
Slip Type	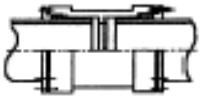 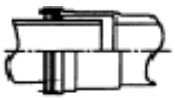

Fig. VI 2-1
Examples of Mechanical Joints

Table VI 2-12
Application of Mechanical Joints(1)

Service	Systems	Kind of Connections		
		Pipe Unions	Compression Couplings(7)	Slip-on Joints(10)
Flammable fluids(8) (Flash point ≤ 60ºC)	Cargo oil lines	+	+	+(6)
	Crude oil washing lines	+	+	+(6)
	Vent lines	+	+	+(4)
Inert gas	Water seal effluent lines	+	+	+
	Scrubber effluent lines	+	+	+
	Main lines	+	+	+(3)(6)
	Distributions lines	+	+	+(6)
Flammable fluids(8) (Flash point > 60ºC)	Cargo oil lines	+	+	+(6)
	Fuel oil lines	+	+	+(3)(4)
	Lubricating oil lines	+	+	+(3)(4)
	Hydraulic oil	+	+	+(3)(4)
	Thermal oil	+	+	+(3)(4)
Sea water	Bilge lines	+	+	+(2)
	Fire main and water spray	+	+	+(4)
	Foam system	+	+	+(4)
	Sprinkler system	+	+	+(4)
	Ballast system	+	+	+(2)
	Cooling water system	+	+	+(2)
	Tank cleaning services	+	+	+
	Non-essential systems	+	+	+
Fresh water	Cooling water system	+	+	+(2)
	Condensate return	+	+	+(2)
	Non-essential system	+	+	+
Sanitary / Drains / Scuppers	Deck drains (internal)	+	+	+(5)
	Sanitary drains	+	+	+
	Scuppers and discharge (overboard)	+	+	–
Sounding / Vent	Water tanks / Dry spaces	+	+	+
	Oil tanks (Flash point > 60ºC)	+	+	+(3)(4)
Miscellaneous	Starting / Control air(2)	+	+	–
	Service air (non-essential)	+	+	+
	Brine	+	+	+
	CO_2 system(2)	+	+	–
	Steam	+	+	+(9)

Notes:

(1) + Application is allowed.
– Application is not allowed.

(2) Inside machinery spaces of category A: only approved fire resistant types.

(3) Not inside machinery spaces of category A or accommodation spaces. May be accepted in other machinery spaces provided the joints are located in easily visible and accessible positions.

(4) Approved fire resistant types.

(5) Above free board deck only.

(6) In pump rooms and open decks : only approved fire resistant types.

(7) If Compression Couplings include any components which readily deteriorate in case of fire, they are to be of approved fire resistant type as required for slip-on joints.

(8) The number of mechanical joints in oil systems is to be kept to a minimum. In general, flanged joints conforming to recognized standards are to be used.

(9) Slip type joints as shown in Fig. VI 2-1 may be used for pipes on deck with a design pressure of 1.0 MPa or less, provided that they are restrained on the pipes.

(10) Slip-on joints are not to be used on pipe lines in cargo holds, deep tanks and other spaces which are not easily accessible, unless approved by the Society.

Table VI 2-13
Application of Mechanical Joints Depending Upon the Class of Piping(1)

Types of joints		Classes of piping systems		
		Class I	Class II	Class III
Pipe unions	Welded and brazed type	+(2)	+(2)	+
Compression couplings	Swage type	+	+	+
	Bite type	+(2)	+(2)	+
	Flared type	+(2)	+(2)	+
	Press type	–	–	+
Slip-on joints	Machine grooved type	+	+	+
	Grip type	–	+	+
	Slip type	–	+	+

Notes:
(1) + Application is allowed.
– Application is not allowed.
(2) May be used for pipes of a nominal diameter of 50A or below.

2.10.2 Direct connection of pipe length

(a) Direct connection of pipe lengths belonging to Class I or II is to be of butt welded type. However, for steel pipes having a nominal diameter of not more than 80A, slip-on sleeve welded joint may be used.

(b) Threaded pipe joints (only tapered thread where used for pipes in Class I and Class II) are not to be used for the following pipes. However, the use for pipes specified in the following (iii) and (iv) may be accepted having regard to the service of the pipes.
(i) Pipes conveying flammable media, except for pipes with small diameter used for instrumentation.
(ii) Pipes for CO_2 systems, except inside protected spaces and in CO_2 cylinder rooms.
(iii) Pipes belonging to Class I with a nominal diameter not exceeding 25A.
(iv) Pipes belonging to Class II and Class III with a nominal diameter not exceeding 50A.

2.10.3 Connection of pipes with pipe fittings

(a) Joints between pipes and pipe flanges are to be adequate for their service conditions, and their construction and strength are to conform to the requirements in Fig. VI 2-2 according to their classified division of application shown in Table VI 2-14, or other type of joints as deemed appropriate by the Society.

Table VI 2-14
Types of Joints Between Pipe and Pipe Flange and Their Application

Class of Pipes	Design Temperature (ºC)	Type of Joints	
		Steam, air and water	Fuel oil, lubricating oil, hydraulic oil and thermal oil
Class I	over 400	A, B(1)	A, B
	400 or below	A, B(2)	
Class II	over 250	A, B, C	A, B, C
	250 or below	A, B, C, D, E	A, B, C, E(3)
Class III	-	A, B, C, D, E, F(4)	A, B, C, E(3)

Notes:
(1) Type (B) joints may be used for steam pipes of a nominal diameter of 50A or below.
(2) Type (B) joints may be used for steam pipes of a nominal diameter of 150A or below.
(3) Type (E) joints may be used for pipes with design pressure of 1.0 MPa or less.
(4) Type (F) joints may be used for water pipes or pipes with an open end.

(b) Valves and pipe fittings made of non-ferrous metal may be mounted on a non-ferrous metal pipe by brazing or soldering. In this case the type of brazing and soldering and the method of application are to be suitable for the conditions of their use.

(c) Joints between pipes and pipe fittings except flanges are to be in compliance with the requirements in 2.10.2(a).

2.10.4 Connection of piping systems

Flexible pipe joints may be permitted in positions where considered necessary by the Society. Such flexible pipe joints are to be of fire resisting materials with an adequate strength and construction approved by the Society.

2.10.5 Forming of pipes and heat treatment after forming

(a) Hot forming of pipes of Class I and Class II is to conform to the following requirements:

(i) Hot forming is to be generally carried out in the temperature range of 1000ºC – 850ºC, however the temperature may decrease to 750ºC during the forming process.

(ii) For steel pipes the stress relieving heat treatment is to be carried out according to the requirements regarding the retaining temperature and period for the pipes.

(b) When pipes of Class I and Class II are subjected to cold-forming suitable heat treatment is to be carried out according to the pipe material, service environment, etc.

2.11 Pipe Welding

For pipe welding, see Part XII.

2.12 Construction of Pumps

For construction of pumps see Chapter 4 of Part IV.

2.13 General Requirements of Piping Arrangement

2.13.1 General

(a) Installation of pipes

(i) Ample provision is to be made in consideration of the effects of expansion, contraction, deflection of the hull and vibration. Pipes are to be supported at suitable spans to avoid any excessive load.

(ii) The number of detachable pipe connections is to be minimized as far as practicable.

(b) Radius of curvature of pipes

In cases where pipes are bent, the radius of curvature at the center line of a pipe is generally not to be less than twice the external diameter of the pipe.

(c) Functions of pipes

Pipes are to be so arranged so that any lingering drainage and air pockets as well as any pressure loss in the pipes do not have any adverse effects on the performance of any machinery.

(d) Piping in the vicinity of electrical equipment

Pipes are not to be laid in way of electrical equipment such as generators, switchboards, control gears, etc. as much as possible. In case where such a situation is unavoidable, care is to be taken to make sure that no flanges or joints are arranged over or near any electrical equipment, unless provisions are made to prevent any leakage from pouring onto the equipment.

(e) Protection of piping systems and fittings

(i) All pipes, valves, cocks, pipe fittings, valve operating rods, handles, etc. located at positions in cargo holds or on weather decks where they are liable to be damaged are to be adequately protected. Where a casing is provided for protection, it is to be so constructed that it can be easily removed for inspection.

(ii) For pipes arranged in positions inaccessible for maintenance and inspection, due consideration such as corrosion protection is to be given to prevent corrosion.

(f) Relief valves

(i) All piping systems which may be subjected to an internal pressure that exceeds design pressure are to be safeguarded with relief valves or, as an alternative, overpressure protective devices.

(ii) Discharge ends of relief valves or overpressure protective devices are to be led into safe spaces.

(g) Pressure and temperature measuring devices

(i) Pressure and temperature measuring devices are to be provided on piping systems where considered necessary.

(ii) Cocks or valves are to be provided at the root of pressure measuring devices in order to isolate them from the pipes under a pressurized condition.

(iii) In cases where thermometers are fitted in fuel oil, lubricating oil and other flammable oil piping or apparatuses, the thermometer is to be put in a safe protective pocket to prevent any oil from spraying out if the thermometer should fracture or be removed.

(h) Distinct marking of piping systems

(i) Pipes located in spaces where deemed necessary for safety are to be marked with distinctive colors to avoid any mishandling.

(ii) Identification plates, which show the purpose of a valve, are to be affixed to valves where deemed necessary for safety, and all valves which are used for fire extinguishing are to be painted red.

(iii) Identification plates are to be affixed to the open ends of air pipes, sounding pipes and overflow pipes.

(i) Cleaning of piping systems

Piping systems are to be cleaned after fabrication or installation on ship where considered necessary.

2.13.2 Connection and common use of pipes

(a) Connection of oil pipes with other pipes

(i) Fuel oil pipes are to be entirely separate from other pipes, unless means are provided to prevent any accidental contamination with other liquids while in operation.

(ii) Lubricating oil pipes are to be entirely separate from all other pipe lines.

(iii) Fresh water pipes, used for boiler feed water or drinking water, are to be entirely separate from other pipes to avoid any accidental contamination with oil or oily water.

(iv) Oil pipes and heating pipes in deep tanks which may be used for carriages of general cargo are to be capable of being disconnected or are to be provided with suitable arrangements such as blank flanges or spool pieces.

(b) Common use of sea water pipes and fresh water pipes

Sea water pipes and fresh water pipes are to be separated, unless adequate measures are taken to avoid any accidental contamination between the two.

2.13.3 Penetration of pipes

In cases where pipes pass through watertight bulkheads, decks, top plates, bottom plates as well as bulkheads of deep tanks and inner bottom plating, measures are to be taken to ensure the water-tightness of the structures.

2.13.4 Slip-on joints

Slip-on joints are not to be used on pipe lines in cargo holds, deep tanks and other spaces which are not easily accessible, unless approved by the Society.

2.13.5 Bulkhead valves

(a) Valves or cocks, such as drain valves, which do not constitute any part of a piping system is not to be fitted on collision bulkheads.

(b) Pipes passing through collision bulkheads are to be fitted with suitable valves that are operable from above the bulkhead deck and valve chests are to be secured to a bulkhead located inside the forepeak. However, these valves may be fitted on the aft side of the collision bulkhead in question provided that the valves are readily accessible under all service conditions, and that the space in which they are located is not a cargo space. Remote control devices for these valves may be omitted.

(c) Valves and cocks, such as drain valves, which do not constitute any part of a piping system, may be fitted on watertight bulkheads other than collision bulkheads, provided that they are readily accessible at any time for inspection. Such valves and cocks are to be operable from above the bulkhead deck and are to be provided with an indicator to show whether they are open or closed, except in cases where the valves or cocks are secured to a fore or aft bulkhead located inside the engine room.

(d) Means for controlling valves or cocks from above freeboard decks or bulkhead decks are to be constructed so that the weights thereof are not supported by the valves or the cocks.

2.13.6 Prevention of freezing of pipes

Suitable measures are to be taken to prevent the freezing of any bilge pipes, air pipes, sounding pipes, drain pipes, etc. that pass through or are arranged near any refrigerated chambers, in cases where the inner surfaces of the pipes are at risk of freezing.

2.13.7 Prevention of counterflow through drain pipes

When any drain pipes in the engine room are led into double-bottom tanks, and when, in cases where sea water flows into the tank by grounding, etc., there is a danger of flooding from these drain pipes, a stop valve or other suitable device that stops the counterflow of sea water is to be provided. This device is to be readily operable from the engine room floor. However, these requirements do not apply to ships of a length less than 100 m.

2.13.8 Drain installation around boilers

A coaming of at least 100 mm in height is to be provided around boilers, and the drain inside the coaming is to be into a bilge well or bilge tank, etc.

2.14 Aluminum and Aluminum Alloy Pipes, Valves and Other Fittings

2.14.1 Aluminum and aluminum alloys pipes, valves and other fittings are not to be used on the following systems:

(a) Flammable oil systems

(b) Sounding and air pipes of fuel oil tanks

(c) Fire-extinguishing systems

(d) Bilge system in boiler or machinery spaces or in spaces containing fuel oil tanks or pumping units

(e) Scuppers and overboard discharges except for pipes led to the bottoms or to the shell above the freeboard deck or fitted at their upper end with closing means operated from a position above the freeboard deck

(f) Boiler blow-down valves and pieces for connection to the shell plating

	Types of Joints and Dimensions
A	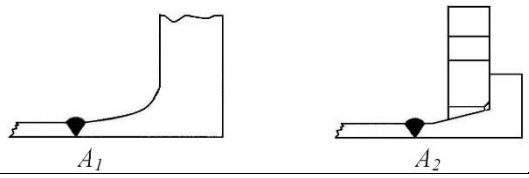
B	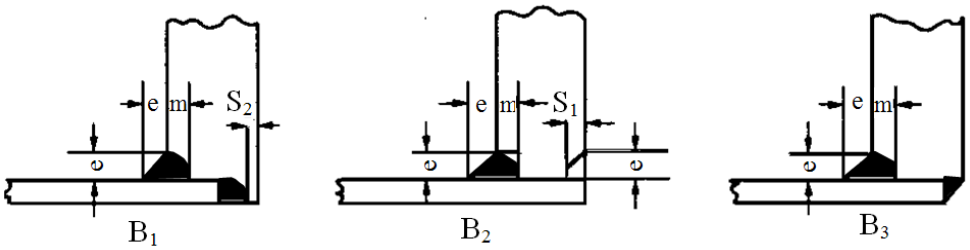
C	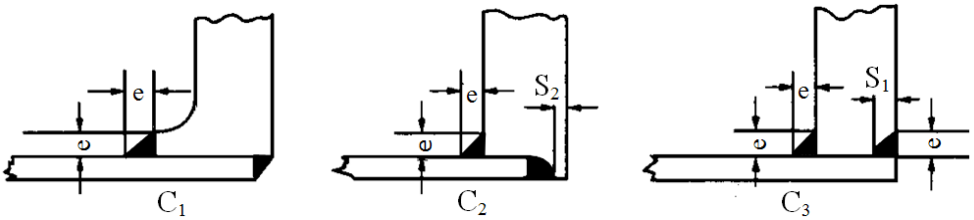
D	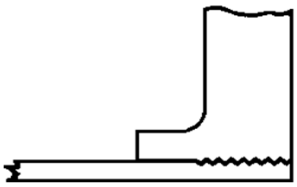
E	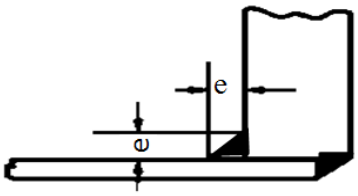
F	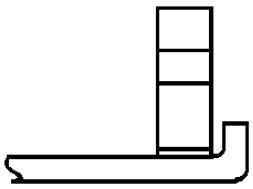

Notes:

(1) Standard dimensions of welds are as follows:
e = 1.4 t
m = t
S_1 = t
S_2 = 0.5 t
where t is the required thickness of the pipe.

(2) For type D, the pipe and flange are to be screwed with a tapered thread and the pipe is to be secured to the flange by means of expansion.
However, the outside diameter of the screw portion of the pipe over the thread is not to be appreciably less than the outside diameter of the unthreaded pipe.

Fig. VI 2-2
Types of Flange Connections

Chapter 3

Hull Piping Systems

3.1 Ship's Side Fittings

3.1.1 All sea inlet and overboard discharge pipes are to be fitted with valves or cocks secured direct to the shell plating, or to the plating of fabricated steel water boxes attached to the shell plating. These fittings are to be secured by bolts tapped into the plating and fitted with countersunk heads, or by studs screwed into heavy steel pads fitted to the plating. The stud holes are not to penetrate the plating.

3.1.2 Valves for ship-side applications are to be installed such that the section of piping immediately inboard of the valve can be removed without affecting the watertight integrity of the hull.

3.1.3 Distance pieces of short, rigid construction, and made of approved material, may be fitted between the valves and shell plating. Distance pieces of steel may be welded to the shell plating. Details of the welded connections and of fabricated steel water boxes are to be submitted.

3.1.4 Gratings are to be fitted at all openings in the ship's side for sea inlet valves and inlet water boxes. The net area through the gratings is to be not less than twice that of the valves connected to the sea inlets, and provision is to be made for clearing the gratings by use of low pressure steam or compressed air, see 3.1.9.

3.1.5 All suction and discharge valves and cocks secured direct to the shell plating of the ship are to be fitted with spigots passing through the plating, but the spigots on the valves or cocks may be omitted if these fittings are attached to pads or distance pieces which themselves form spigots in way of the shell plating. Blow-down valves or cocks are also to be fitted with a protection ring through which the spigot is to pass, the ring being on the outside of the shell plating. Where alternative forms of attachment are proposed, details are to be submitted for consideration.

3.1.6 Blow-down valves or cocks on the ship's side are to be fitted in accessible positions above the level of the working platform, and are to be provided with indicators showing whether they are open or shut. Cock handles are not to be capable of being removed unless the cocks are shut, and, if valves are fitted, the hand wheels are to be suitably retained on the spindle.

3.1.7 Sea inlet and overboard discharge valves and cocks are in all cases to be fitted in easily accessible positions and, so far as practicable, are to be readily visible. Indicators are to be provided locally to the valves and cocks, showing whether they are open or shut. Provision is to be made for preventing any discharge of water into lifeboats. The valve spindles are to extend above the lower platform, and the hand wheels of the main cooling water sea inlet and emergency bilge suction valves are to be situated above this platform.

3.1.8 Ship-side valves and fittings, if made of steel or other approved material with low corrosion resistance, are to be suitably protected against wastage.

3.1.9 The scantlings of valves and valve stools fitted with steam or compressed air clearing connections are to be suitable for the maximum pressure to which the valves and stools may be subjected.

3.1.10 Valves, cocks and distance pieces, intended for installation on the ship's side below the waterline, are to be tested by hydraulic pressure to not less than 0.5 MPa.

3.2 Air Pipes and Over Flow Pipes

3.2.1 General

(a) All tanks and cofferdams are to be provided with air pipes having sufficient cross sectional areas to permit easy venting from any part of the tank and cofferdam.

(b) Tanks having top plates not less than 7 meters either in length or in width are to be provided with 2 or more pipes arranged a suitable distance apart. However, tanks having inclined top plates may be provided with 1 air pipe located at the highest part of the top plate.

(c) For tanks requiring more than 1 air pipe, overflow pipes may be used in lieu of air pipes as long as proper air flow from the tank to the atmosphere is ensured; all tanks, however, are to be provided with at least 1 air pipe.

(d) In cases where tanks or cofferdams are of a complicated profile, special consideration is to be given to the number and positions of all air pipes.

(e) Air pipes are to be arranged to be self-draining.

(f) Vent pipes for fuel oil service, settling and lubrication oil tanks are to be located and arranged so that, in cases where such pipes break, there is no direct risk of any ingress of seawater or rainwater.

3.2.2 Open Ends of Air Pipes

(a) The position of the open ends of air pipes are to be in accordance with the following requirements (i) to (iv) depending on the type and purpose of tanks.

(i) Air pipes to the following tanks and cofferdams are to be led above the bulkhead deck.

(1) Double bottom tanks

(2) Deep tanks

(3) Tanks which allow for ingress of sea water

(4) Cofferdams

(ii) Air pipes to the following tanks and cofferdams are to be led to the weather part.

(1) Fuel oil tanks and thermal oil tanks

(2) Cargo oil tanks

(3) Heated lubricating oil tanks and hydraulic oil tanks

(4) Tanks which hold liquids and are filled by pumps, (only for tanks which are situated outside machinery spaces and not provided with overflow pipes)

(5) Cofferdams adjacent to fuel oil tanks and cargo oil tanks.

(iii) Air pipes to tanks, which hold liquids and are filled by pumps, are to be led to a safe position where the equipment cannot suffer any damage from any overflowing which may occur when the tank is being filled with a liquid.

(iv) Air pipes to tanks carrying combustible or flammable liquids are to be led to a safe position where there is no possibility of fire caused by any oil or gas leaking from the openings when the tank is being filled.

(b) All openings of air pipes leading above the weather deck are to be provided with automatic closing devices.

(c) The open ends of air pipes to fuel oil and cargo oil tanks are to be provided with a flame arresting wire gauze of corrosion resistant materials that is easy to clean and detach as well as have a clear area through the mesh of not less than the required sectional area of the air pipe.

3.2.3 The height of air pipes carried above the weather deck is to be in accordance with 21.2.2 of Part II.

3.2.4 Size of Air Pipes

Sizes of air pipes are to be as follows:

(a) The total sectional area of air pipes to tanks, which hold liquids and are filled by pumps, is not to be less than 1.25 times the total sectional area of the filling pipes. In cases where the tank is provided with an overflow pipe, the total sectional area may include that of air pipes to tanks to which overflow pipes are connected. The internal diameter of the air pipes is not to be less than 50 mm.

(b) Provisions are to be made for relieving vacuum when the tanks are being pumped out.

(c) The internal diameter of air pipes to cofferdams or tanks which form part of ship's structure is not to be less than 50 mm.

3.2.5 A tank having a comparatively large capacity is required to have at least 2 air pipes, one of which is to be located at the highest part of the tank. For small tanks such as fuel oil settling tanks, only one pipe may be fitted but it is not to be used as the fuel tank filling.

3.2.6 The openings of air pipes are to be provided with satisfactory arrangements to prevent free entry of water.

3.2.7 Air and overflow pipes are to be so arranged as to be self-draining under normal conditions of trim.

3.2.8 Air and overflow pipes are to be of steel having a minimum thickness as specified in Table VI 2-3.

3.2.9 The overflow system is to be so arranged that in the event of any one of the tanks being flooded, the water from the sea cannot enter other tanks located in separate watertight compartments through overflow pipes.

3.2.10 The outlets of overflow pipes if arranged to discharge through the ship's side, are to be located as far above the deep load line as practicable and provided with a non-return value located on the ship's side. Where the pipe does not extend above the freeboard deck, an efficient and accessible means for preventing water from passing inboard is to be provided in addition.

3.2.11 The cross-sectional area of overflow pipes if fitted is to be at least 25% in excess of the effective area of filling pipes.

3.2.12 Where tanks for fuel oil or cargo oil are provided with an overflow system, the discharge from the system is to be led to an overflow tank.

3.2.13 The overflow from settling tanks or daily service tanks is to be led back to the fuel oil tank or to the overflow tank and the overflow pipe is to be fitted with an alarm device or a sight glass, indicating the overflow when taking place. If a sight flow glass is also provided in the overflow pipe. Then such sight glasses are to have documentation verifying that a prototype of the assembly has a suitable degree of fire resistance and are adequately protected from mechanical damage and are to be fitted only in vertical sections of overflow pipes.

3.2.14 The overflow tank is to have a capacity large enough to take an overflow of 10 minutes at the normal rate of loading.

3.2.15 The air pipes for fuel oil service, settling and lubrication oil tanks are to be located and arranged to prevent the risk of ingress of seawater splashes or rainwater in the event of a broken air pipe.

3.2.16 Where tanks which can be filled by pumps, overflow pipes are to be provided where:

(a) The total cross-sectional area of the air pipe is less than that required by 3.2.4 of this Part.

(b) Fuel oil service and settling tanks

(c) Where tanks which have openings below the open ends of air pipes.

3.3 Air Pipe Closing Devices

3.3.1 General Requirements

Where air pipes are required by the Rules or Load Line Convention, 1966 to be fitted with automatic closing devices, they are to comply with the following:

3.3.2 Design

(a) Air pipe automatic closing devices are to be so designed that they will withstand both ambient and working conditions, and be suitable for use at inclinations up to and including ± 40°.

(b) Air pipe automatic closing devices are to be constructed to allow inspection of the closure and the inside of the casing as well as for changing the seals.

(c) Efficient ball or float seating arrangements are to be provided for the closures. Bars, cage or other devices are to be provided to prevent the ball or float from contacting the inner chamber in its normal state and made in such a way that the ball or float is not damaged when subjected to water impact due to a tank being overfilled.

(d) Air pipe automatic closing devices are to be self-draining.

(e) The clear area through an air pipe closing devices in the open position is to be at least equal to the area of the inlet.

(f) An automatic closing device is to:

(i) prevents the free entry of water into the tanks, and

(ii) allows the passage of air or liquid to prevent excessive pressure or vacuum coming on the tanks.

(g) In the case of air pipe closing devices of the float type, suitable guides are to be provided to ensure unobstructed operation under all working conditions of heel and trim as specified in 3.3.2(a).

(h) The maximum allowable tolerances for wall thickness of floats are not to exceed ±10% of the nominal thickness.

(i) The inner and the outer chambers of an automatic air pipe head is to be of a minimum thickness of 6 mm.

3.3.3 Materials

(a) Casings of air pipe closing devices are to be of approved metallic materials adequately protected against corrosion.

(b) For galvanized steel air pipe heads, the zinc coating is to be applied by the hot method and the thickness is to be 70 to 100 microns.

(c) For areas of the head susceptible to erosion (e.g. those parts directly subjected to ballast water impact when the tank is being pressed up, for example the inner chamber area above the air pipe, plus an overlap of 100 or more either side) an additional harder coating should be applied. This is to be an aluminium bearing epoxy, or other equivalent, coating, applied over the zinc.

(d) Closures and seats made of non-metallic materials are to be compatible with the media intended to be carried in the tank and to seawater and suitable for operating at ambient temperatures between −25°C and 85°C.

3.3.4 Type testing

(a) Testing of air pipe automatic closing devices

Each type and size of air pipe automatic closing devices is to be surveyed and type tested at the manufacturer's works or other acceptable location according to the Society's practice. The minimum test requirements for an air pipe automatic closing devices are to include the following:

(i) Determination of the flow characteristics

The flow characteristics of the air pipe closing device are to be determined. Measuring of the pressure drop versus rate of volume flow is to be carried out using water and with any intended flame or insect screens in place.

(ii) Tightness test during immersing/emerging in water

An automatic closing device is to be subjected to a series of tightness tests involving not less than two immersion cycles under each of the following conditions:

(1) The automatic closing device is to be submerged slightly below the water surface at a velocity of approximately 4 m/min. and then returned to the original position immediately. The quality of leakage is to be recorded.

(2) The automatic closing device is to be submerged to a point slightly below the surface of the water. The submerging velocity is to be approximately 8 m/min. and the air pipe vent head is to remain submerged for not less than 5 minutes. The quality of leakage is to be recorded.

(3) Each of the above tightness tests is to be carried out in the normal position as well as at an inclination of 40 degrees under the strictest conditions for the device. In cases where such strictest conditions are not clear, tests shall be carried out at an inclination of 40 degrees with the device opening facing in three different directions: upward, downward, sideways (left or right). (Refer to Figs. VI 3-1 to 3-4).

(iii) Discharge / Reverse flow test

The air pipe head shall allow the passage of air to prevent excessive vacuum developing in the tank. A reverse flow test shall be performed. A vacuum pump or another suitable device shall be connected to the opening of the air pipe leading to the tank. The flow velocity shall be applied gradually at a constant rate until the float gets sucked and blocks the flow. The velocity at the point of blocking shall be recorded. 80% of the value recorded will be stated in the certificate.

The maximum allowable leakage per cycle is not to exceed 2 ml/mm of nominal diameter of inlet pipe during any individual test.

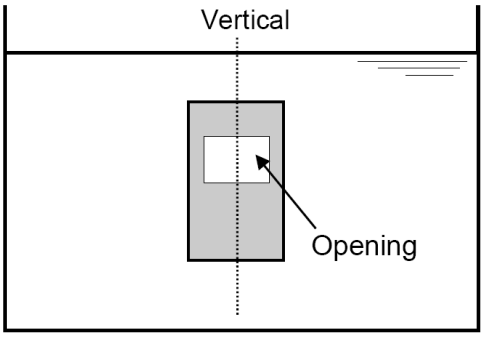

Fig. VI 3-1
Example of Normal Position

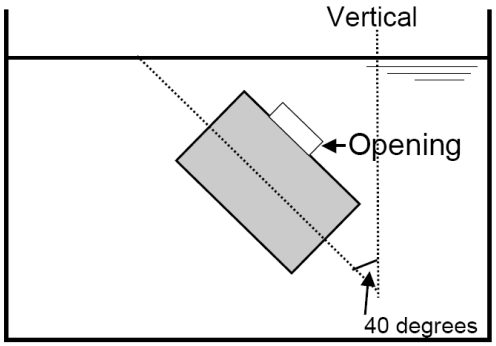

Fig. VI 3-2
Example of Inclination 40 degrees Opening Facing Upward

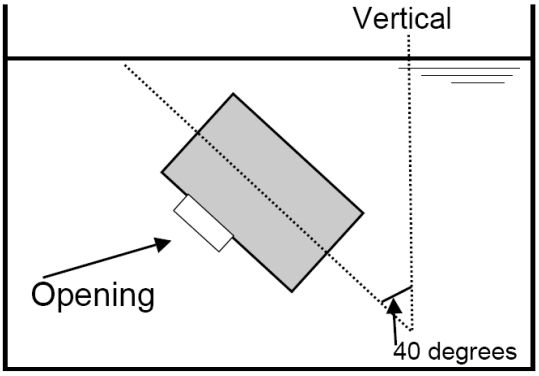

Fig. VI 3-3
Example of Inclination 40 degrees Opening Facing Downward

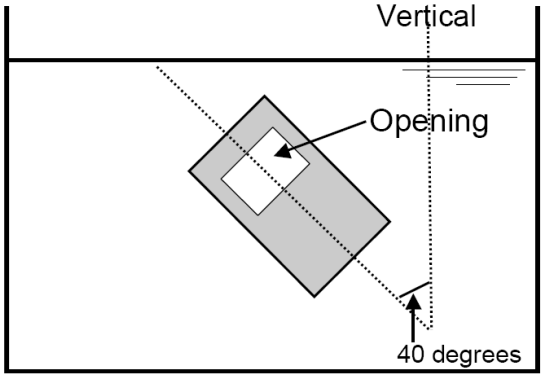

Fig. VI 3-4
Example of Inclination 40 degrees Opening Facing Sideways

(b) Testing of non-metallic floats

Impact and compression loading tests are to be carried out on the floats before and after pre-conditioning as follows:

Test temperature °C		–25	20	85
Test Condition	Dry	X	X	X
	After immersing in water	X	X	X
	After immersing in fuel oil		X	
Immersing in water and fuel oil is to be for at least 48 hours				

(i) Impact test

The test may be conducted on a pendulum type testing machine. The floats are to be subjected to five impacts of 2.5 Nm each and are not to suffer permanent deformation, cracking or surface deterioration at this impact loading. Subsequently the floats are to subjected to five impacts of 25 Nm each. At this impact energy level some localized surface damage at the impact point may occur. No permanent deformation or cracking of the floats is to appear.

(ii) Compression loading test

Compression loading test is to be conducted with the floats mounted on a supporting ring of a diameter and bearing area corresponding to those of the float seating with which it is intended that float is to be used. For ball type float, loads are to be applied through a concave cap of the same internal radius as the test float and bearing on an area of the same diameter as the seating. For disc type float, loads are to be applied through a disc of equal diameter as the float. A load of 350 kg is to be applied over one minute and maintained for 60 minutes. The deflection is to be measured at intervals of 10 minutes after attachment of the full load. The record of deflection against time is to show no continuing increase in deflection and, after release of the load, there is to be no permanent deflection.

(c) Testing of metallic floats

Tests are to be conducted in accordance with 3.3.4(b)(i). The tests are to be carried out at room temperature and in the dry condition.

3.4 Sounding Pipes

3.4.1 Cargo hold bilge or other tanks which are not at all times accessible are to be fitted with sounding pipes which are to be located as near suction pipes as practicable, and if curved to suit the structure of the ship, the curvature must be sufficiently easy to permit the ready passage of the sounding rod or chain.

3.4.2 The openings of sounding pipes are to be provided with satisfactory arrangements to prevent the free entry of the water.

3.4.3 Sounding pipes are to be extended to the upper deck or to another position always accessible on the bulkhead deck above the deep load line. Sounding pipes for double bottom tanks and tanks whose boundaries extend to the shell at or below the deepest load water line may be permitted to be terminated below the freeboard deck if the closing device fitted at the open end is a gate valve or screw cap. Short sounding pipes for double bottom tanks located under the machinery space may have their openings terminated in the shaft tunnel and the machinery space provided they are readily accessible at all times and not in close vicinity of the high temperature surfaces or electric equipment and accessory which are not protected by a watertight enclosure.

3.4.4 Short sounding pipes not led above the bulkhead deck are to comply with the following requirements:

(a) Sounding pipes to oil fuel and lubricating oil tanks are to be fitted with self-closing device.

(b) Sounding pipes to tanks other than fuel or lubricating oil tanks are to be provided with gate valves or non-detachable screw caps.

3.4.5 The internal diameter of sounding pipes is not to be less than 32 mm.

3.4.6 Sounding pipes are to be of steel and the minimum thickness is to be not less than that specified in Table VI 2-3.

3.4.7 Sounding pipes to tanks for fuel oil, lubricating oil and other flammable oils are not to terminate in accommodation spaces and adjacent to the electrical equipment, boilers and other heated surfaces.

3.4.8 Sounding pipes are not to pass through refrigerated spaces. If it is unavoidable, they are to have a well insulated internal diameter of not less than 65 mm. Sounding pipes to oil compartments are not to terminated within refrigerated cargo chambers or in the fan and battery rooms for these chambers, nor are these pipes to terminate in enclosed spaces from which access is provided to refrigerated cargo chambers or their fan and battery rooms, if it is practicable to avoid doing so. Where these sounding pipes do terminate in such spaces they are to be fitted with self-closing device having parallel plugs.

3.4.9 Striking disks of an adequate thickness and size are to be fitted on the shell plating under open ended sounding pipes. When slotted sounding pipes having closed ends are used, the closing plugs are to be of substantial thickness.

3.4.10 Tank sounding devices of an approved type may be used in lieu of sounding pipes. These devices are to be tested in the presence of the Surveyor after being fitted on board.

3.4.11 Lubricating oil, fuel oil or other inflammable liquids tanks, independent of the hull structure or integral, located above the deep load water line, may be fitted with glass gauges, which are to comply with the requirements of the followings:

(a) The glasses are to be of flat shape and of heat resisting quality, and adequately protected from mechanical damage. Round glass gauges may, however, be used subject to the approval by the Society, for small tanks provided that special consideration is paid to the construction, strength and protection from mechanical damages of the glasses.

(b) The valves or cocks at the lower ends of glass gauges are to be provided with self-closing means.

3.4.12 Elbow sounding pipes may be fitted to tanks and may be used for sounding bilge when it is not practicable to lead them directly to tanks or compartments. Elbow sounding pipes when used with deep tanks are to be situated within the closed cofferdam or within the tank containing a similar liquid. The elbows are to be of heavy construction and adequately supported.

3.4.13 Water level detection and alarm systems for bulk carriers

(a) For the purpose of 3.4.13, bulk carrier means a ship which is intended primarily to carry dry cargo in bulk, including such types as ore carriers and combination carriers.

(b) For bulk carriers defined in (a), water level detection and alarm systems are to be provided for giving audible and visual alarms in the navigation bridge, in accordance with the following (i) to (iv):

(i) In each cargo hold, the systems which are to be fitted at the aft end of the cargo hold are to give alarms when the water level reaches the following (1) and (2):

(1) a height of 0.5 m above the inner bottom

(2) a height not less than 15% of the depth of the cargo hold but not more than 2.0 m

The visual alarms are to clearly discriminate between the two different water levels detected in each cargo hold.

(ii) In any ballast tank forward of the collision bulkhead, the systems are to give an alarm when the liquid in the tank reaches a level not exceeding 10% of the tank capacity.

(iii) In any dry or void space other than a chain locker, any part of which extends forward of the foremost cargo hold and the volume of which exceeds 0.1% of the ship's maximum displacement volume, the systems are to give an alarm at a water level of 0.1 m above the deck.

(iv) The systems are to have constructions and functions deemed appropriate by the Society.

(c) Alarms given by the water level detection and alarm systems specified in (b) are to be capable of being easily distinguishable from alarms given by other installations in the navigation bridge.

(d) The water level detection and alarm systems specified in (b) for ballast tanks and cargo holds which have been designed to carry water ballast may be provided with override devices that are deemed appropriate by the Society.

(e) Manuals documenting operating and maintenance procedures for the water level detection and alarm systems specified in (b) are to be kept on board.

3.4.14 Water level detection and alarm systems for single hold cargo ships

(a) Cargo ships, other than bulk carriers defined in 3.4.13(a), having a length (L_f) of less than 80 m, or 100 m if constructed before 1 July 1998, and a single cargo hold below the freeboard deck or cargo holds below the freeboard deck which are not separated by at least one bulkhead made watertight up to that deck, are to be fitted in such space or spaces with water level detection and alarm systems in accordance with the following (i) to (iii):

(i) These water level detection and alarm systems are to give an audible and visual alarm at the navigation bridge when the water level above the inner bottom in the cargo hold reaches a height of not less than 0.3 m, and another when such level reaches not more than 15% of the mean depth of the cargo hold.

(ii) The systems are to be fitted at the aft end of the hold, or above its lowest part where the inner bottom is not parallel to the designed waterline. In cases where webs or partial watertight bulkheads are fitted above the inner bottom, the fitting of additional detectors may be required.

(iii) The systems are to have constructions and functions deemed appropriate by the Society.

(b) Alarms given by the water level detection and alarm systems specified in (a) are to be capable of being easily distinguishable from alarms given by other installations in the navigation bridge.

(c) Manuals documenting operating and maintenance procedures for the water level detection and alarm systems specified in (a) are to be kept on board.

(d) Notwithstanding the provisions of (a), water level detection and alarm systems need not to be fitted in ships complying with the requirements of 3.4.13, or in ships having watertight side compartments on each side of the entire length of the cargo hold and that extend vertically at least from inner bottom to freeboard deck having a breadth that is deemed appropriate by the Society.

3.5 Hull Piping Systems

3.5.1 General

(a) Every ship is to be provided with an efficient pumping capable of pumping water from, and draining, any watertight compartment when the ship is on an even keel and is either upright or listing 5°. It will generally be necessary to fit wing suctions, except in short and narrow compartments at the end of the ship where one suction may be sufficient.

(b) In the compartment of an unusual form, an additional suction may be required, and an arrangement is to be made whereby water in the compartment may find its way to suction pipes in the even and trim conditions of the ship.

(c) The bilge and ballast arrangements of small ships and ships intended for restricted or special service are to be specially considered in each case.

3.5.2 Arrangement of bilge and pumping systems

(a) The arrangement of the bilge and the pumping systems is to be such as to prevent the possibility of water or oil entering the cargo or the machinery space or from one compartment to another, whether from the sea water ballast or oil tank.

(b) Bilge or ballast mains are to have a separate control valve at the pump.

(c) On bulk carriers defined in 3.4.13(a), the means of draining and pumping system for those spaces specified in (i) and (ii) below are to be capable of being brought into operation from a readily accessible enclosed space, the location of which is accessible from the navigation bridge or propulsion machinery control position without traversing exposed freeboard or superstructure decks.

(i) Ballast tanks forward of the collision bulkhead.

(ii) Dry or void spaces other than a chain locker, any part of which extends forward of the foremost cargo hold and the volume of which exceeds 0.1% of the ship's maximum displacement volume.

3.5.3 Screw-down non-return valves are to be provided in the following fittings:

(a) Valves in the bilge manifold.

(b) Branches for bilge suction hoses.

(c) Direct bilge suctions and bilge pump connections to the main bilge line.

(d) Emergency bilge suctions.

3.5.4 Bilge pipes for the drainage of cargo holds or machinery spaces are to be separated from sea inlet valves or from pipes used for filling or emptying holds or tanks intended to carry water or oil.

3.5.5 No drain valve or cock is to be fitted to collision bulkheads but on suction and filling pipes for the fore peak tank where pipes are carried through a cargo hold or through a tank carrying fuel oil, a screw-down valve is to be provided on the forward side of the peak bulkhead. The valve, if fitted, is to be operated from a place located above the bulkhead deck and a provision is made to show whether the valve is open or closed.

3.5.6 Valves, cocks and strainers are to be in a readily accessible position above or on the same level as floor plates. Where this is not practicable, they may be placed immediately below, provided the floor plates in way are easily removed and affixed with a name plate indicating which fitting is placed below.

3.5.7 Where bilge or ballast pipes pass through a deep tank they are to be led through pipe tunnels or made of heavy steel with expansion bends and in one length if practicable or with welded joints. When tunnels are not employed, the bilge pipes are to be provided with non-return valves of approved type on the suction end. The pipes and the non-return valves if fitted, are to be tested to the same pressure as that to which the tank is tested.

3.5.8 Bilge suction pipes are to be efficiently protected when carried through cargo holds or coal bunkers.

3.5.9 Bilge pipes are not to be carried through the double bottom tank. If so carried they are to be of ample strength and tested to the maximum pressure the tank is subjected to.

3.5.10 The open ends of bilge suction pipes are to be sufficiently high above the bottom of the bilge or the well to permit a full flow of water and to facilitate cleaning.

3.5.11 In ships of 4,000 gross tonnage and above other than oil tankers and in oil tankers of 150 gross tonnage and above, no ballast water is to be carried in any fuel oil tank.

3.5.12 Discharge connections of bilge discharge pipe- -lines are to comply with the requirement in Chapter 6 of this Part.

3.6 Drainage of Cargo Holds

3.6.1 In cargo holds bilge suction pipes are to be fitted with a rose box at the end so arranged as to be easily cleaned. The total area of holes in the rose box is to be at least twice the internal sectional area of the pipes and each hole is not to be more than 10 mm in diameter.

3.6.2 In cargo holds with an inner bottom, the arrangement of suction pipes and bilge wells is to be as follows:

(a) Bilge suctions are to be fitted to bilge on each side of the cargo hold.

(b) Where the inner bottom plating extends to the ship's side, bilge suctions are to be led to wells placed at wings. Where the inner bottom plating slopes down to the center line by more than 5°, a center well fitted with a suction is also to be provided.

(c) Bilge wells are to be formed of steel plates and the least capacity of each well is not to be less than 0.15 m^3. Steel bilge hats of reasonable capacity may be fitted in small compartments.

3.6.3 In cargo holds without an inner bottom and the rise of the floor is greater than 5°, at least one bilge suction is to be fitted on the center line. Where the rise of the floor is less than 5°, at least one bilge suction is to be fitted on each side.

3.6.4 In ships having only one cargo hold and exceeding 30 m in length bilge suctions are to be fitted in both after half and forward half of the hold.

3.6.5 If access to the bilge suction of a hold well from a machinery space or a tunnel cannot be avoided a hinged watertight door or manhole is to be provided to maintain the intactness of the watertight plating. An instruction plate in raised letters is to be affixed in a well lighted position to indicate that the door or cover is kept close except when access is required. The designs of these accesses are to be submitted in each case for approval.

3.6.6 When gravity drains from other spaces are terminated in cargo holds, the cargo bilge well is to be fitted with a high level alarm, Gravity drains which terminate in spaces which are protected by fixed gas extinguishing systems are to be fitted with means to prevent the escape of extinguishing medium.

3.7 Drainage of Machinery and Tunnel Spaces

3.7.1 Bilge drainage in machinery space

(a) The bilge drainage in the machinery space is to be provided with at least 2 suctions, one of which is to be a direct suction from an independent pump or bilge ejector (See 3.12.6 of this Part). If the main machinery space is separated by watertight bulkheads into compartments, unless the pumps available for bilge service are distributed throughout these compartments, in which case at least one pump in each such compartment is to be fitted with a direct suction in its compartment.

(b) The direct suction is to be so arranged that it can be used independently from other bilge systems.

3.7.2 In the machinery space with an inner bottom, the arrangement of suction pipes is to be as follows:

(a) Where the inner bottom extends the full length of the machinery space and forms bilge on sides, 2 bilge suctions, one from the direct suction and the other from branch, are to be fitted to the bilge on each side of the machinery space.

(b) Where the inner bottom plating extends the full length and width of the compartment, the bilge well is to be provided with, at least one on each side and the capacity of each is not to be less than 0.15 m^3. Bilge suctions, one from the main line and one from the direct suction, are to be provided on each side.

3.7.3 When the machinery space is without an inner bottom and the rise of the floor is greater than 5 degrees, 2 bilge suctions are to be provided near the center line in an accessible position, one from the main bilge line and one from the direct suction. Where the rise of the floor is less than 5 degrees, additional suctions are to be required on each side.

3.7.4 In addition to the 2 suctions as required under preceding 3.7.1 the following arrangement of the emergency bilge suction is to be fitted for the ship:

(a) A suction pipe fitted with a screw-down non-return valve having a hand wheel and spindle extending above the floor plate is to be provided.

(b) In steam ships, this suction is to be fitted to the suction end of the main circulating pump. The diameter of this pipe and the bore of the valve are not to be less than 2/3 that of the main cooling water pump suction.

(c) In motor ships, the emergency bilge suction is to be led to the largest available pump in engine room and the area of the suction pipe is to be equal to the full suction inlet of the pump.

(d) Where the pump specified in above 3.7.4(c) to which the emergency bilge suction is connected is of the self-priming type, the direct bilge suction on the same side of the ship as the emergency suction may be omitted.

3.7.5 In the shaft tunnel, a suction from the main bilge line is to be fitted to the tunnel aft. Where the tunnel tank top slopes down from aft to forward, an additional suction is to be fitted at the forward end.

3.7.6 Bilge lines in machinery spaces and tunnels, other than emergency bilge suctions, are to be fitted with strainers easily accessible from floor plates and are to have straight tail pipes to bilge. In addition strainers are to be fitted in accessible positions between bilge manifolds and pumps. Rose boxes are not to be fitted to the lower ends of these tail pipes.

3.7.7 On ships having electric machinery for propulsion purpose, special means of drainage is to be provided to prevent the accumulation of water under the main generator, the motor and the switchboard.

3.8 Drainage from Refrigerated Cargo Holds

3.8.1 Insulated spaces are to have ample continuous drainage through non-return valves or water sealed traps. When drains are from a separated refrigerated space joining a common header, each of the branch pipes is to be fitted with a water sealed trap and each of the branch pipes from lower hold spaces is to be fitted in addition with a non-return valve.

3.8.2 Screw plugs or other means for blanking off scuppers draining insulating chambers and cooler trays are not to be fitted.

3.8.3 Liquid sealed traps are to be of adequate depth and arrangements are to be made for ready access to traps for cleaning and refilling with brine.

3.9 Drainage from Spaces in Other Decks

3.9.1 General

See Chapter 22 of Part II.

3.9.2 The intactness of the machinery space bulkheads, and of tunnel plating which is required to be of watertight construction, is not to be impaired by the fitting of scuppers discharging to machinery space or tunnels from adjacent compartments which are situated below the bulkhead deck. These scuppers may, however, be led into a strongly constructed scupper drain tank which is situated in the machinery space or the tunnel, but which is to be closed to these spaces and drained by means of a suction of appropriate size led from the main bilge line through a screw-down non-return valve. Scupper tank air pipes are to be led to above the bulkhead deck and the sounding device is to be provided. Where one tank is used for the drainage of several watertight compartments, scupper pipes are to be provided with screwdown non-return valves.

3.9.3 The steering gear compartment, or other small enclosed spaces situated above the after peak tank are to be provided with suitable means of drainage by either hand or power pump bilge suctions, if the compartment is adequately isolated from the adjacent twin deck it may be drained to the shaft tunnel or to the engine room by 40 mm dia. drain line with a quick acting self-closing valve located at a visible position.

3.9.4 The chain locker and the watertight compartment above the fore peak tank are to be drained either by a hand pump or through the bilge system.

3.10 Drainage of Tanks

3.10.1 Suctions in double bottom tank are to be so arranged that the tanks can also be emptied with the ship in unfavorable conditions of trim and list. Ships having very wide double bottoms are also to be provided with suctions at the sides of tanks. Where the double bottom is divided so that there are 3 tanks athwart-ships, each tank need only be fitted with a single suction. Where the length of the tanks exceeds 30 m, additional suctions are to be required.

3.10.2 Where fore and aft peaks are used as tanks, a separate pump suction is to be led to each of them, except that in the case of a small tank used for carrying domestic fresh water, a hand pump may suffice.

3.10.3 Where fore and aft peaks are not used as tanks they are to be drained by a bilge suction or by an efficient hand pump. The suction lift is to be well within the suction limit of the pump and is in no case to exceed 7.3 m.

3.10.4 In the case of a deep tank which may be used for the carriage of either water ballast, liquid oil or dry cargo, provision is to be made for blanking off water ballast and liquid oil filling and suction pipes when the tank is being used for the carriage of dry cargo and for blanking off bilge suction pipes when the tank is being used for the carriage of water ballast or liquid oil. This means of blanking off is preferably to be fitted outside of the tank for easy access.

3.11 Sizes of Bilge Suction Pipes

3.11.1 The diameters of bilge suction pipes are not to be less than required by the followings to the nearest size within 6 mm:

(a) Main bilge line:

$$d_1 = 25 + 1.68\sqrt{L_f(B + D)}$$

(b) Branch bilge suctions to cargo and machinery spaces:

$$d_2 = 25 + 2.15\sqrt{l(B + D)}$$

(c) In no case is the diameter of the main bilge line to be less than that required for any branch bilge suction.

(d) No branch bilge suction pipe is, however, to be less than 50 mm bore except that for drainage of a small compartment, it may be reduced to 40 mm, where considered acceptable.

(e) In oil tankers and similar ships where pipes in the machinery space are not used for bilge drainage outside the machinery space, the size of the main bilge line may be less than that stipulated by the formula in (a) above. In no case, however, is the cross-sectional area of the pipe to be less than twice that required for branch bilge suctions in the machinery space.

(f) The notations used in (a) and (b) above are defined as follows:

d_1 = Internal diameter of main bilge line, in mm.
d_2 = Internal diameter of branch bilge suction, in mm.
L_f = Length of ship for freeboard specified in 1.2.10 of Part II, in m.
l = Length of the compartment, in m.
B = Breadth of ship, in m.
D = Molded depth of ship to bulkhead deck in m.

3.11.2 Direct bilge suctions are to be of a size not less than that required for the main bilge line as given in 3.11.1(a) above except those in the engine room of comparatively small dimensions which may be specially considered.

3.11.3 The internal diameter of bilge suction pipes to the fore and aft peaks which are not used as tanks and to a tunnel well is not to be less than 65 mm for ships exceeding 60 m, and 50 mm for ships under 60 m in length.

3.11.4 A small pocket or space may be drained by using pipes of 37 mm in diameter.

3.12 Bilge Pumps

3.12.1 Every ship is to be provided with 2 independent power bilge pumps. In ships of 91.5 m in length and under, one of them may be worked from the main engine. For small ships or ships having a restricted navigation zone, however, alterations to this requirement may be considered. In such ships, in particular, one of the pumps may be replaced by an ejector or any other device capable of ensuring the drainage under similar conditions to those obtained with the other pump.

3.12.2 Connections at the bilge pumps are to be so arranged that one can be worked while the other is being overhauled.

3.12.3 The capacity of each pumping unit is to be sufficiently large to given a speed of water through the ruled size of the main bilge line of not less than 122 m/min. under ordinary working conditions. Where the capacity of one pump is of slightly less the required, the deficiency may be made up by the other pump if provided with.

3.12.4 The minimum capacity of the pump is to be

$$Q = 0.00575d_1^2$$

where:

Q = Pump capacity, in m^3/h.
d_1 = Required internal diameter of bilge pipes, in mm.

3.12.5 Pumps used for bilge services are to be of self-priming type or connected to a central priming system.

3.12.6 Where an ejector suction is used as direct bilge suction, the capacity is to be equivalent to that as required by 3.12.4 of this Part.

3.12.7 The bore of pipes fitted with hand pumps such as used for small compartments or steering gear rooms is to be of the size not less than that given in 3.11.1(b) of this Part.

3.12.8 For passenger ships, at least three power bilge pumps are to be provided, one of which may be operated from the main engines. Where the bilge pump numeral as derived from Regulation 35-1.3.2 of Chapter II-1 of the International Convention for the Safety of Life at Sea, 1974, and applicable amendments, is 30 or more, one additional independent power pump is to be provided.

3.13 Additional Requirements for Bilge Drainage and Cross Flooding Arrangements for Passenger Ships

3.13.1 In passenger ships, the power bilge pumps required by 3.12 are to be placed, if practicable, in separate watertight compartments which will not readily be folded by the same damage. If the engines and boilers are in two or more watertight compartments, the bilge pumps are to be distributed throughout these compartments so far as is possible.

3.13.2 In passenger ships of 91.5 m or more in length, or having a bilge pump numeral of 30 or more (see 3.12), the arrangements are to be such that at least one power pump will be available for use in all ordinary circumstances in which the ship may be flooded at sea. The requirement will be satisfied if:

(a) one of the pumps is an emergency pump of a submersible type having a source of power situated above the bulkhead deck, or

(b) the pumps and their sources of power are so disposed throughout the length of the ship that, under any conditions of flooding which the ship is required by statutory regulation to withstand, at least one pump in an undamaged compartment will be available.

3.13.3 The bilge main is to be so arranged that no part is situated nearer the side of the ship than B/5, measured at right angles to the centerline at the level of the deepest subdivision load line, where B is the breadth of the ship.

3.13.4 Where any bilge pump or its pipe connection to the bilge main is situated outboard of the B/5 line, then a non-return valve is to be provided in the pipe connection at the junction with the bilge main. The emergency bilge pump and its connections to the bilge main are to be so arranged that they are situated inboard of the B/5 line.

3.13.5 Provision is to be made to prevent the compartment served by any bilge suction pipe being flooded, in the event of the pipe being severed, or otherwise damaged by collision or grounding in any other compartment. For this purpose, where the pipe is at any part situated nearer the side of the ship than B/5 or in a duct keel, a non-return valve is to be fitted to the pipe in the compartment containing the open end.

3.13.6 All the distribution boxes, valves and cocks in connection with the bilge pumping arrangements are to be so arranged that, in the event of flooding, one of the bilge pumps may be operative on any compartment. If there is only one system of pipes common to all pumps, the necessary valves or cocks for controlling the bilge suctions must be capable of being operated from the bulkhead deck. Where, in addition to the main bilge pumping system, an emergency bilge pumping system is provided, it is to be independent of the main system and so arranged that a pump is capable of operating on any compartment under flooding conditions; in this case, only the valves and cocks necessary for the operation of the emergency system need be capable of being operated from above the bulkhead deck.

3.13.7 All valves and cocks mentioned in 3.13.6 which can be operated from above the bulkhead deck are to have their controls at their place of operation clearly marked and provided with means to indicate whether they are open or closed.

3.13.8 Where divided deep tanks or side tanks are provided with cross flooding arrangements to limit the angle of heel after side damage. The arrangements are to be self-acting where practicable. In any case, where controls to cross flooding fittings are provided, they are to be operable from above the bulkhead deck.

3.14 Drainage Arrangements for Ships not Fitted with Propelling Machinery

3.14.1 Where auxiliary power is not provided, hand pumps are to be fitted, in number and position, as may be required for the efficient drainage of the ship.

3.14.2 In general, one hand pump is to be provided for each compartment. Alternatively, two pumps connected to a bilge main, having at least one branch to each compartment, are to be provided.

3.14.3 The pumps are to be capable of being worked from the upper deck or from positions above the load waterline which are at all times readily accessible. The suction lift is not to exceed 7.3 m and is to be well within the capacity of the pump.

3.14.4 The size of the hand pumps are to be not less than those given in Table VI 3-1. Where the ship is closely subdivided into small watertight compartments, 50 mm bore suctions will be accepted.

Table VI 3-1
Size of Hand Pumps

Tonnage under upper deck	Diameter of barrel of bucket pump (mm)	Bore of suction pipe of bucket pumps and semirotary pumps (mm)
Not exceeding 500 tons	100	50
Above 500 tons but not exceeding 1,000 tons	115	57
Above 1,000 tons but not exceeding 2,000 tons	125	65
Above 2,000 tons	140	70

3.14.5 In ships in which auxiliary power is available on board, power pump suctions are to be provided for dealing with the drainage of tanks and of the bilges of the principal compartments.

3.14.6 The pumping arrangements are to be as required for self-propelled ships, so far as these requirements are applicable, duly modified to suit the size and service of the ship.

3.14.7 Details of the pumping arrangements are to be submitted for special considerations.

3.15 Ballast Systems

3.15.1 The arrangement of ballast piping and the number of suctions are to be such that any ballast tank can be filled or emptied under normal service conditions, whether the ship is upright or listed.

3.15.2 Where the ballast tanks exceed 35 m in length, they are normally to be fitted with bilge suctions at their forward and aft ends.

3.15.3 The arrangement of ballast piping is to be such as to prevent the possibility of water passing from the sea or from ballast tanks into dry cargo and machinery spaces or other dry compartments.

3.15.4 Ballast water pipes are not to pass through drinking water, feedwater or lubricating oil tanks. Where it is unavoidable, the wall thickness of ballast pipes in drinking water, feedwater or lubricating oil tanks is to comply with the provisions in 2.2.2 of this Part and welded joints are to be adopted.

3.15.5 The ballast piping is not to be in connection with the bilge pipes from dry cargo and machinery spaces, nor with the pipes from oil tanks. However, this requirement need not be applied to the pipes located between distribution boxes and pump suctions or between pumps and overboard discharges, nor to the pipes detailed in 3.15.6 below.

3.15.6 Where the compartments (including deep tanks) are used for alternative carriage of dry cargo, oil or ballast water, provision is to be made for isolating or blank flanging the ballast lines. This requirement is also applicable to the

drinking water tanks which may be used as ballast tanks, so as to avoid the interconnection of the two systems. The arrangement for the discharge of oily ballast water is to be in accordance with the relevant requirements for the prevention of pollution from ships.

3.15.7 In general, oil tankers of 150 gross tonnage and above, any passenger ships, and other ships of 4000 gross tonnage and above are not to carry ballast water in oil fuel tanks, if it is necessary to do so, provisions are to be made for the prevention of pollution from the ships.

3.15.8 For the requirements of ballast system in oil tankers, see the relevant provisions in Chapter 5 of this Part.

3.16 Cargo Vapor Emission Control System

3.16.1 The additional class notation **VEC** is assigned to ships fitted with systems for control of vapor emission from cargo tanks complying with the requirements of this section. Systems satisfying the additional provision of 3.16.10 for the control of vapor emission of lighting operation will be assigned with the notation **VEC-T**. Lightering is the transfer of liquid cargo from one vessel to another.

3.16.2 Where a cargo vapor emission control system is to be installed, the following plans and particulars are to be submitted:

(a) Cargo vapor emission control and collection piping; associated venting and inert gas systems; drainage arrangements; bill of materials.

(b) Maximum allowable cargo transfer rate; pressure/vacuum valve capacity test reports and settings; associated calculations.

(c) Tank gauging systems; overfill control, instrumentation and alarm systems; overfill settings.

(d) Hazardous locations and certified safe electrical equipment in these locations.

3.16.3 Vapor system

(a) Vapor collection piping is not to interfere with the proper operation of the cargo tank venting system. When inert gas distribution piping is used for vapor collection piping, means to isolate the inert gas supply from the vapor collection system are to be provided.

(b) Means are to be provided to eliminate liquid condensate which may collect in the system.

(c) Vessels collecting vapors from incompatible cargoes simultaneously are to have a means of maintaining separation of the vapors throughout the collection system.

(d) Bolt hole arrangement of vapor connection flanges to the terminal is to be in accordance with Table VI 3-2. Each vapor connection flange is to have a permanently attached 12.7 mm diameter stud protruding out of the flange face for at least 25.4 mm. The stud is to be located at the top of the flange, midway between bolt holes and in line with bolt hole patterns.

(e) An isolation valve capable of manual operation is to be provided at the ship vapor connection. The valve is to have an indictor to show clearly whether the valve is in the open or closed position, unless the valve position can be readily determined from the valve handle or valve stem.

(f) Vapor collection piping is to be electrically bonded to the hull and is to be electrically continuous.

(g) The last 1.0 m of vapor piping inboard of the vapor connection flange is to be painted red/yellow/red with the red bands 0.1 meter wide, and the yellow band 0.8 meter wide. The yellow band is to be labeled with "VAPOR" in black letters at least 50 mm high.

(h) Hoses, used for transferring vapor, are to comply with the following:

(i) a design burst pressure of at least 0.175 MPa

(ii) a maximum working pressure of at least 0.035 MPa

(iii) the capability of withstanding at least 0.014 MPa vacuum without collapsing or constricting

(iv) electrical continuity with a maximum resistance of 10000 Ω

(v) resistance to abrasion and kinking

(vi) the last 1 m of each end of the hose marked in accordance with (g) above

(vii) have flanges with bolt hole arrangement in accordance with Table VI 3-2, and one or more 15.75 mm diameter holes in the flange located midway between bolt holes and in line with the bolt hole pattern.

3.16.4 Vapor overpressure and vacuum protection

(a) For vessels intended to operate with vapor emission control systems, the cargo tanks are to be equipped with a venting system. Each tank venting system is:

(i) to be capable of discharging cargo vapor at 1.25 times the maximum transfer rate in such a way that the pressure in the vapor space of each tank connected to the vapor collection system does not exceed the maximum working pressure of the tank or the operating pressure of a safety valve or rupture disk, if fitted

(ii) not to relieve at a pressure corresponding to a pressure in the cargo tank vapor space of less than 0.007 MPa

(iii) to prevent a vacuum in the cargo tank vapor space that exceeds the maximum design vacuum for any tank which is connected to the vapor collection system, when the tank is discharged at the maximum rate

(iv) not to relieve at a vacuum corresponding to a vacuum in the cargo tank vapor space less than 0.0035 MPa below the atmospheric pressure.

(b) Pressure/vacuum safety valves are to be fitted with means to check that the device operates freely and does not remain in the open position.

(c) Pressure relief valves are to be fitted with a flame screen at their outlets, unless the valves are designed in such a way as to ensure a vapor discharge velocity of not less than 30 m/second.

3.16.5 Gauging system

(a) Each cargo tank that is connected to a vapor collection system is to be equipped with a cargo gauging device which:

(i) provides a closed gauging arrangement which does not require opening the tank to the atmosphere during cargo transfer

(ii) allows the operator to determine the liquid level in the tank for the full range of liquid levels in the tank

(iii) indicates the liquid level in the tank, at the position where cargo transfer is located

(iv) if portable, is installed on tank during the entire transfer operation.

3.16.6 High level and overfill alarm

(a) Each cargo tank is to be fitted with a high level alarm and an overfill alarm, which are to be independent of each other. The overfill alarm is also to be independent of the tank gauging system. The alarm systems are to be self-monitoring (or fitted with other means of testing) and provided with alarms for failure of tank level sensor circuits and power supply. All alarms are to have visual and audible signals and are to be given at each cargo transfer control station. In addition, overfill alarms are also to be given in the cargo deck area in such a way that they can be seen and heard from most locations.

(b) The high level alarm is to be set at no less than that corresponding to 95% of tank capacity, and before the overfill alarm level is reached. The overfill alarm is to be set so that it will activate early enough to allow the crew in charge of the transfer operations to stop the transfer before the tank overflows.

(c) At each cargo transfer control station, the high level alarms and the overfill alarms are to be identified with the labels "HIGH LEVEL ALARM" and "TANK OVERFILL ALARM" respectively.

3.16.7 High and low vapor pressure alarm

(a) Each vapor collection system is to be fitted with one or more pressure sensing devices that sense the pressure in the main collection line, and which:

(i) have a pressure indicator located where the cargo transfer is controlled

(ii) alarm the high pressure at not more than 90% of the lowest relief valve setting in the tank venting system

(iii) alarm at a low pressure of not less than 100 mm WG for an inerted tank, or the lowest vacuum relief valve setting in the cargo venting system for a non-inerted tank.

(b) Pressure sensors fitted in each cargo tank are acceptable as equivalent to pressure sensors fitted in each main vapor collection line.

3.16.8 Instruction manual

(a) An instruction manual including procedures relating to vapor emission control operations is to be submitted solely for verification that the information in the manual on the cargo vapor emission control system is consistent with the design information considered in the review of the system. The instruction manual is also to include:

(i) Cargo tanks to which the cargo vapor emission control system applies; and

(ii) Maximum cargo transfer rate and maximum specific weight of cargo vapor considered.

3.16.9 Testing and trials

(a) Machinery and equipment which are part of the vapor collection system are to be tested in compliance with the applicable requirements of the various Parts of the Rules.

(b) Pressure parts are to be subjected to hydrostatic tests in accordance with the applicable requirements.

(c) Pressure/vacuum valves are to be tested for venting capacity. The test is to be carried out with the flame screen installed if contemplated in accordance with 3.16.4(c).

(d) Upon completion of construction, in addition to conventional sea trials, specific tests may be required at the Society's discretion in relation to the characteristics of the plant fitted on board.

3.16.10 Additional requirements for notation **VEC-T**

(a) These requirements are applicable to service vessels, which receive and transport cargo oil between a facility and another vessel.

(b) If the cargo tanks on a ship discharging cargo and a ship receiving cargo are inerted, the service ship is to have means to inert the vapor transfer hose prior to transferring cargo vapor and an oxygen analyzer with a sensor or sampling connection fitted within 3 m of the ship vapor connection which:

(i) activates an audible and visual alarm at a location on the service ship where cargo transfer is controlled when the oxygen content in the vapor collection system exceeds 8% by volume

(ii) has an oxygen concentration indicator located on the service ship where the cargo transfer is controlled

(iii) has a connection for injecting a span gas of known concentration for calibration and testing of the oxygen analyser.

(c) If the cargo tanks on a ship discharging cargo are not inerted, the vapor collection line on the service ship is to be fitted with a detonation arrester located within 3 m of the ship vapor connection.

(d) An electrical insulating flange or one length of non-electrically conductive hose is to be provided between the ship vapor connection on the service ship and the vapor connection on the ship being lightered.

Table VI 3-2
Bolting Arrangement and Size of Connecting Flanges

Pipe nominal diameter (mm)	Outside diameter of flange (mm)	Bolt circle diameter (mm)	Bolt hole diameter (mm)	Bolt diameter (mm)	Number of bolts
≤ 12.70	88.90	60.45	15.75	12.70	4
≤ 19.05	98.55	69.85	15.75	12.70	4
≤ 25.40	107.95	79.25	15.75	12.70	4
≤ 31.75	117.35	88.90	15.75	12.70	4
≤ 38.10	127.00	98.55	15.75	12.70	4
≤ 50.80	152.40	120.65	19.05	15.87	4
≤ 63.50	177.80	139.70	19.05	15.87	4
≤ 76.20	190.50	152.40	19.05	15.87	4
≤ 88.90	215.90	177.80	19.05	15.87	8
≤ 101.60	228.60	190.50	19.05	15.87	8
≤ 127.00	254.00	215.90	22.35	19.05	8
≤ 152.40	279.40	241.30	22.35	19.05	8
≤ 203.20	342.90	298.45	22.35	19.05	8
≤ 254.00	406.40	361.95	25.40	22.22	12
≤ 304.80	482.60	431.80	25.40	22.22	12
≤ 355.60	533.40	476.25	28.45	25.40	12
≤ 406.40	596.90	539.75	28.45	25.40	16
≤ 457.20	635.00	577.85	31.75	28.54	16
≤ 508.00	698.50	635.00	31.75	28.57	20
≤ 609.60	749.30	749.30	35.05	31.75	20

Chapter 4

Machinery Piping Systems

4.1 Boiler Feed Systems

4.1.1 General

(a) Ships fitted with boilers are to be provided with a storage space for reserve feed water. The structure of the feed water tank and the piping arrangement are to be such that the water cannot be contaminated by oil or oily water.

(b) In the feed system, a filter or alternatively an oil separator is to be provided in the following cases for continuous filtration of the boiler feed water.

(i) Where superheated steam is used in main or auxiliary reciprocating engines.

(ii) Where direct contact heater is supplied with exhaust steam from main or auxiliary reciprocating engines.

(c) The return from the heating coil as well as the drain from the oil heater in the service system is to run to a well lighted inspection tank before being led to the feed tank.

4.1.2 Feed pumps

(a) Steam ships are to have at least 2 entirely separate means of feeding main and auxiliary boilers continuously and simultaneously which are required for essential service.

(b) Where boilers are used exclusively for nonessential service one of the feeding units may be an injector of the required capacity.

(c) A boiler heated exclusively by engine exhaust gas or steam may be fed by one means of feeding provided an alternative supply of steam is available on board.

(d) In order to satisfy the condition stated in 4.1.2(a) above, 2 or more feed pumps of sufficient capacity are to be provided to supply boilers under normal conditions with any one pump out of action.

(e) Feed pumps may be either independent or driven by main engines but one at least of those required in pursuance of 4.1.2(d) above is to be independent.

(f) Where main engine driven feed pumps are fitted and there is only one independent feed pump, a harbor feed pump or an injector is to be fitted to provide the second means of feeding to boilers which are in use when main engines are not working.

(g) Feed pumps are to be so arranged that while one pumping unit is in operations, the others can be opened up for examination.

(h) Suitable means is to be provided to prevent the water from running back while the pump is not in use.

(i) Independent feed pumps for feeding main boilers are to be fitted with automatic feed regulators for controlling their output.

(j) Feed pumps are to be fitted with a relief valve except for the feed system served by the pumps so designed that the pressure delivered cannot exceed that for which the piping is designed.

4.1.3 Feed water circulating equipment

(a) Circulating pumps

Every forced circulating boiler is to be equipped with at least 2 independently powered circulating pumps, either of which is to be of sufficient capacity. Failure of the circulating pump must be indicated by a warning system, and this system must cease to operate only when the circulating system resumes operation or when the boiler firing is shout down.

(b) A single circulating device is sufficient when:

(i) the steam generator is heated solely by gases, the temperature of which does not exceed 500°C (exhaust gas boiler),

(ii) 2 similar forced circulating boilers are arranged in the same boiler room and a common spare circulating pump is available for use with either boiler,

(iii) the burners of oil or gas fired boilers are arranged so that they are automatically shut off should the circulating pump fail and the heat stored in the furnace and uptakes does not cause excessive evaporation of the available water, provided that there are at least two boilers or the boiler concerned is auxiliary boiler and is not necessary for the propulsion of the ship.

4.1.4 Condensate pumps

(a) At least two means to deal with the condensate from the condenser are to be provided. An attached pump to the main engine may be accepted as one of the means.

(b) An independent feed pump fitted with a direct suction from the condenser and a discharge to the feed tank is acceptable as one of the means of dealing with the condensate.

4.1.5 Valves and cocks

Feed and condensate pumps are to be provided with valves or cocks, interposed between the pumps and the suction and the discharge pipes, so that any pumps may be opened up for overhaul while the others continue in operation.

4.2 Steam Piping System

4.2.1 General

(a) Steam or exhaust pipes are not to be led through bunkers or cargo spaces without special approval. Where pipes are led through the shaft tunnel or the pipe tunnel in way of cargo holds or through duct keels, they are to be efficiently insulated.

(b) The auxiliary steam line worked under reduced pressure and not designed to withstand boiler pressure is to be fitted with a pressure gauge and an escape valve of sufficient capacity to protect the piping against excessive pressure.

(c) On steam pipes adequate provision is to be made for expansion and contraction.

(d) Where steam is used for fire extinguishing in holds, provision is to be made to prevent damage to cargo by leakage of steam or by drip. Details of the proposed precautionary measures are to be submitted for consideration.

(e) The slope of pipes and the number and positions of drain cocks or valves are to be such that water can be efficiently drained from any portion of the steam pipe range when the ship is in normal trim and either is upright or has a list up to 5 degrees. The locations of the drain cocks or the valves are to be accessible.

4.2.2 Steam heating piping

(a) Where steam is used for heating oil fuel, cargo oil, lubricating oil in tanks, heaters or separators, the condensate is to be led into well-ventilated open observation tank placed in an easily accessible and well lighted position to see whether it is free from oil or not.

(b) Steam heating pipes in contact with oil are to be of steel or any other appropriate material such as aluminum alloy, copper alloy or cast iron of approved type.

4.3 Cooling Water System

4.3.1 Main and emergency supplies

(a) Provision is to be made for an adequate supply of cooling water to the main propelling machinery and essential auxiliary engines, also to lubricating oil and fresh water coolers and air coolers for electric propelling machinery, where these coolers are fitted. The cooling water pump(s) may be worked from engines or be driven independently.

(b) In the case of main steam turbine installations, a sea inlet scoop arrangement may replace the main sea water circulation pump, subject to the conditions stated in 4.3.2(b)(iii).

4.3.2 Standby supply

(a) Provision is also to be made for a separate supply of cooling water from a suitable independent pump of adequate capacity.

(b) The following arrangements are acceptable, depending on the purpose for which the cooling water is intended.

(i) Where only one main engine is fitted, the standby pump is to be connected ready for immediate use.

(ii) Where more than one main engine is fitted, each with its own pump, a complete spare pump of each type may be accepted.

(iii) Where a sea inlet scoop arrangement is fitted, and there is only one independent condenser circulating pump, a further pump, or a connection to the largest available pump suitable for circulation duties, is to be fitted to provide the second means of circulation when the ship is maneuvering. The pump is to be connected ready for immediate use.

(iv) Where fresh water cooling is employed for main and/or auxiliary engines, a standby fresh water pump need not be fitted if there are suitable emergency connections from a salt water system.

(v) Where each auxiliary is fitted with a cooling water pump, standby means of cooling need not be provided. Where, however, a group of auxiliaries is supplied with cooling water from a common system, a standby cooling water pump is to be provided for this system. This pump is to be connected ready for immediate use and may be a suitable general service pump.

4.3.3 Sea inlets and strains

(a) At least 2 cooling water inlets are to be fitted to the ship's side, one for the main pump and the other for the standby pump. One of the valves may be the ballast or the general service sea inlet valve.

(b) The openings of ship's side inlet valves as mentioned in the 4.3.3(a) above are to be placed low down to the bottom. For ship sailing or navigating in shallow water, one additional sea inlet valve as high suction is recommended to be fitted in an upper position not over the light water line.

(c) Where sea water is used for the cooling of the main engine or essential auxiliary engine the cooling water suction line is to be provided with a strainer which can be cleaned without interrupting the supply of cooling water.

4.3.4 Safety devices

Where cooling water pumps can develop a pressure head greater than the design pressure of the system, they are to be provided with relief valves on the pump discharge to effectively limit the pump discharge pressure to the design pressure of the system.

4.4 Fuel Oil System

4.4.1 Fuel oil-general requirements

(a) Flash point

(i) The flash point (closed cup test) of fuel oil for use in ships classed for unrestricted service is, in general, to be not less than 60°C. For emergency generator engines a flash point of not less than 43°C is permissible.

(ii) Fuels with flash points lower than 60°C may be used in ships intended for service restricted to geographical limits where it can be ensured that the temperature of the machinery and boiler spaces will always be 10°C below the flash point of the fuel. In such cases safety precautions and the arrangements for storage and pumping will be specially considered. However, the flash point of the fuel is to be not less than 43°C unless specially approved.

(iii) The use of fuel having a lower flash point than specified in (i) or (ii) may be permitted provided that such fuel is not stored in any machinery space and the arrangements for the complete installation are specially approved.

(iv) In general, oil fuel in storage and service tanks is not to be heated to a temperature exceeding 10°C below its flash point. Higher temperatures will be considered where.

(1) The tanks are vented to a safe position outside the engine room and, as in the case of all oil fuel tanks, the ends of the ventilation pipes are fitted with gauze diaphragms.

(2) Openings in the drainage systems of tanks containing heated oil fuel are located in spaces where no accumulation of oil vapours at temperatures close to the flash point can occur.

(3) There is no source of ignition in the vicinity of the ventilation pipes or near the openings in the drainage systems or in the tanks themselves.

(v) The temperature of any heating medium is not to exceed 220°C.

(b) Special fuels

(i) When it is desired to carry a quantity of fuel having a flash point below 43°C for special services, e.g. aviation spirit for use in helicopters, full particulars of the proposed arrangements are to be submitted for special consideration.

(ii) For the burning of methane gas in methane tankers, see the IGC Code.

(iii) Where it is proposed to use gaseous fuels for main or auxiliary engines in ships other than methane tankers, the relevant requirements of the IGC Code are to be complied with. Full particulars of the proposed arrangements are to be submitted for special consideration. Attention is to be given to any relevant statutory requirements of the National Authority of the country in which the ships are to be registered.

(c) Ventilation

The spaces in which the fuel oil burning appliances and the fuel oil settling and service tanks are fitted are to be well ventilated and easy of access.

(d) Boiler insulation and air circulation in boiler room

(i) The boilers are to be suitably lagged. The clearance spaces between the boilers and tops of the double bottom tanks, and between the boilers and the sides of the storage tanks in which fuel oil and cargo oil is carried, are to be adequate for the free circulation of the air necessary to keep the temperature of the stored oil sufficiently below its flash point, see 5.1 of Part V.

(ii) Where water tube boilers are installed, there is to be a space of at least 760 mm between the tank top and the underside of the pans forming the bottom of the combustion spaces.

(iii) Smoke-box doors are to be shielded and well fitting, and the uptake joints made gastight. Where the surface temperature of the uptakes may exceed 220°C, they are to be efficiently lagged to minimize the risk of fire and to prevent damage by heat. Where lagging covering the uptakes, including flanges, is oil-absorbing or may permit penetration of oil, the lagging is to be encased in sheet metal or equivalent. In locations where the Surveyor is satisfied that oil impingement could not occur, the lagging need not be encased.

(e) Funnel dampers

Dampers which are capable of completely closing the gas passages are not to be fitted to inner funnels of ships equipped for burning fuel oil only. In ships burning oil or coal alternatively, dampers may be retained, if they are provided with a suitable device whereby they may be securely locked in the fully open position.

(f) Heating arrangements

(i) Where steam is used for heating fuel oil, cargo oil or lubricating oil, in bunkers, tanks, heaters or separators, the exhaust drains are to discharge the condensate into an observation tank in a well lighted and accessible position where it can be readily see whether or not it is free from oil, see 5.11 of this Part.

(ii) Where hot water is used for heating, means are to be provided for detecting the presence of oil in the return lines from the heating coils.

(iii) Where it is proposed to use any heating medium other than steam or hot water, full particulars of the proposed arrangements are to be submitted for special consideration.

(iv) The heating pipes in contact with oil are to be of iron, steel, approved aluminum alloy or approved copper alloy, and, after being fitted on board, are to be tested by hydraulic pressure in accordance with the requirements of 7.2 of this Part.

(v) Where electric heating elements are fitted means are to be provided to ensure that all elements are submerged at all times when electric current is flowing and that their surface temperature can not exceed 220°C.

(g) Temperature indication

(i) Tanks and heaters in which oil is heated are to be provided with suitable means for ascertaining the temperature of the oil. Where thermometers or temperature sensing devices are not fitted in blind pockets, a warning notice, in raised letters, is to be affixed adjacent to the fittings stating "Do not remove unless tank/heater is drained".

(ii) Controls are to be fitted to limit oil temperatures in oil storage and service tanks in accordance with 4.4.1(a)(iv) and in oil heaters to the maximum approved operating temperature.

(h) Precautions against fire

(i) Settling and daily service fuel oil tanks and fuel oil filters are not to be situated immediately above boilers or other highly heated surfaces.

(ii) Fuel oil pipes are to be installed, and screened or otherwise suitably protected, to avoid oil spray or oil leakages onto hot surfaces, into machinery air intakes, or other sources of ignition such as electrical equipment. Pipe joints are to be kept to a minimum, and where provided are to be of a type acceptable to the Society. Pipes are to be led in well lighted and readily visible positions, see 3.7 and 3.8 of Part IV.

(iii) Filters and strainers are to be located to avoid oil spray or oil leakages onto hot surfaces or other sources of ignition, or onto rotating machinery parts. Where necessary, shielding is to be provided and the arrangements are to allow easy access for routine maintenance. The design of filters and strainers is to be such that they cannot be opened when under pressure and suitable means for pressure release are to be provided, with drain pipes led to a safe location.

(iv) The arrangement and location of short sounding pipes to oil tanks are to be in accordance with 3.4 of this Part. For alternative sounding arrangements, see 3.4 of this Part.

(v) Water service pipes and hoses are to be fitted in order that the floor plates and tank top or shell plating in way of boilers, fuel oil apparatus or deep storage tanks in the engine and boiler spaces can at any time be flushed with sea water.

(vi) So far as is practicable, the use of wood is to be avoided in the engine rooms, boiler rooms and tunnels of ships burning fuel oil.

(vii) Drip trays are to be fitted at the furnace mouths to intercept oil escaping from the burners, and under all other fuel oil appliances which are required to be opened up frequently for cleaning or adjustment.

(viii) Oil-tight drip trays of ample size having suitable drainage arrangements are to be provided at pipes, pumps, valves and other fittings where there is a possibility of leakage. Valves are to be located in well lighted and readily visible positions. Drip trays will not be required where pumps, valves and other fittings are placed in special compartments either inside or outside the machinery space with approved over all drainage arrangements or for valves which are so positioned that any leakage will drain directly into the bilges see 4.4.1(h)(ii).

(ix) Where drainage arrangements are provided from collected leakages, they are to be led to a suitable oil drain tank not forming part of an overflow system.

(x) Separate fuel oil tanks are to be placed in an oil-tight spill tray of ample size having drainage arrangements leading to a drain tank of suitable size, see 4.4.3(q).

4.4.2 Fuel oil burning arrangements

(a) Oil burning unit

(i) Where steam is required for the main propelling engines, for auxiliary machinery for essential services, or for heating of heavy fuel oil and is generated by burning fuel oil under pressure, there are to be not less than two oil burning units, each unit comprising a pressure pump, a suction filter, a discharge filter and a heater. For auxiliary boilers, an single oil burning unit may be accepted, provided that alternative means, such as an exhaust gas boiler or composite boiler, are available for supplying steam for essential purposes.

(ii) In two unit installations, each unit is to be capable of supplying fuel for generating all the steam required for essential services.

(iii) In installations of three or more units, the capacities and arrangements of the units are to be such that all the steam required for essential services can be maintained with any one unit out of action.

(iv) Unit pressure pumps are to be entirely separate from the feed, bilge or ballast systems.

(b) Gravity feed

In systems where oil is fed to the burners by gravity, duplex filters are to be fitted in the supply pipeline to the burners and so arranged that one filter can be opened up when the other is in use.

(c) Starting-up unit

(i) A starting-up fuel oil unit, including an auxiliary heater and hand pump, or other suitable starting-up device, which does not require power from shore, is to be provided.

(ii) Alternatively, where auxiliary machinery requiring compressed air or electric power is used to bring the boiler plant into operation, the arrangements for starting such machinery are to comply with 4.6.

(d) Steam connections to burners

Where burners are provided with steam purging and/or atomizing connections, the arrangements are to be such that fuel oil cannot find its way into the steam system in the event of valve leakage.

(e) Burner arrangements

The burner arrangement are to be such that a burner cannot be withdrawn unless the fuel oil supply to that burner is shut-off, and that the oil cannot be turned on unless the burner has been correctly coupled to the supply line.

(f) Quick-closing valve

A quick-closing master valve is to be fitted to the oil supply to each boiler manifold, suitably located so that the valve can be readily operated in an emergency, either directly or by means of remote control, having regard to the machinery arrangements and location of controls.

(g) Top-fired boilers-Flame failure

In the case of top-fired boilers, means are to be provided so that, in the event of flame failure, the fuel oil supply to the burners is shut-off automatically, and audible and visual warnings are given. Any proposal to depart from this requirements in the case of small auxiliary top-fired boilers will be specially considered.

(h) Spill arrangements

Provision is to be made, by suitable non-return arrangements, to prevent oil from spill systems being returned to the burners when the oil supply to these burners has been shut-off.

(i) Alternately fired furnaces

For alternately fired furnaces of boilers using exhaust gases and oil fuel, the exhaust gas inlet pipe is to be provided with an isolating device and interlocking arrangements whereby fuel oil can only be supplied to the burners when the isolating device is closed to the boiler.

(j) Fuel oil supply to main and auxiliary engines

Two or more filters are to be fitted in the fuel oil supply lines to the main and auxiliary engines, and the arrangements are to be such that any filter can be cleaned without interrupting the supply of filtered fuel oil to the engines.

(k) Booster pumps

(i) Where an fuel oil booster pump is fitted, which is essential to the operation of the main engine, a standby pump is to be provided.

(ii) The standby pump is to be connected ready for immediate use but where two or more main engines are fitted, each with its own pump, a complete spare pump may be accepted provided that it is readily accessible and can easily be installed.

(l) Fuel valve cooling pumps

Where pumps are provided for fuel valve cooling, the arrangements are to be in accordance with 4.4.2(k).

(m) Oil fired galleys

(i) The fuel oil tank is to be located outside the galley and is to be fitted with approved means of filling and venting.

(ii) The fuel supply to the burners is to be controlled from a position which will always be accessible in the event of a fire occurring in the galley.

(iii) The galley is to be well ventilated.

(iv) When liquefied petroleum gas is used, similar provisions are to be made.

4.4.3 Fuel oil pumps, pipes, fittings, tanks, etc.

(a) Transfer pumps

Where a power driven pump is necessary for transferring fuel oil, a standby pump is to be provided and connected ready for use, or, alternatively, emergency connections may be made to one of the unit pumps or to another suitable power driven pump.

(b) Control of pumps

The power supply to all independently driven fuel oil transfer and pressure pumps is to be capable of being stopped from a position outside the space which will always be accessible in the event of fire occurring in the compartment in which they are situated, as well as from the compartment itself.

(c) Relief valves on pumps

All pumps which are capable of developing a pressure exceeding the design pressure of the system are to be provided with relief valves. Each relief valve is to be in close circuit, i.e. arranged to discharge back to the suction side of the pump and to effectively limit the pump discharge pressure to the design pressure of the system.

(d) Pump connections

Valves or cocks are to be interposed between the pumps and the suction and discharge pipes, in order that any pump may be shut-off for opening up and overhauling.

(e) Pipes conveying heated oil

(i) Pipes conveying heated oil under pressure are to be of seamless steel or other approved material having flanged or welded joints, and are to be placed in sight above the platform in well lighted and readily accessible parts of the machinery spaces. The number of flanged joints is to be kept to a minimum.

(ii) The flanges are to be machined, and the jointing material, which is to be impervious to oil heated to 150°C, is to be the thinnest possible, so that flanges are practically mental to metal. The scantlings of the pipes and their flanges are to be suitable for a pressure of at least 1.4 MPa or for the design pressure, whichever is the greater.

(iii) The short joining lengths of pipes to the burners from the control valves at the boiler may have cone unions, provided these are of specially robust construction.

Flexible hoses of approved material and design may be used for the burner pipes, provided that spare lengths, complete with couplings, are carried on board.

(f) Low pressure pipes

(i) Transfer, suction and other low pressure oil pipes and all pipes passing through oil storage tanks are to be made of cast iron or steel, having flanged joints suitable for a working pressure of not less than 0.7 MPa. The flanges are to be machined and the jointing material is to be impervious to oil. Where the pipes are 25 mm bore or less, they may be of seamless copper or copper alloy, except those which pass through oil storage tanks. Oil pipes within the engine and boiler spaces are to be fitted where they can be readily inspected and repaired.

(ii) For requirements regarding bilge pipes in way of double bottom tanks and deep tanks, see 3.10.1 and 3.10.4 of this part.

(g) Valves and cocks

(i) Valves, cocks and their pipe connections are to be so arranged that oil cannot be admitted into tanks which are not structurally suitable for the carriage of oil or into tanks which can be used for the carriage of fresh water.

(ii) All valves and cocks forming part of the fuel oil installation are to be capable of being controlled from readily accessible positions which, in the engine and boiler spaces, are to be above the working platform.

(iii) Every fuel oil suction pipe from a double bottom tank is to be fitted with a valve or cock.

(h) Valves on deep tanks and their control arrangements

(i) Every fuel oil suction pipe from a storage, settling and daily service tank situated above the double bottom, and every fuel oil leveling pipe within the boiler room or engine room, is to be fitted with a valve or cock secured to the tank.

(ii) In the engine and boiler spaces, such valves and cocks are to be capable of being closed locally and from positions outside these spaces which will always be accessible in the event of fire occurring in these space. Instructions for closing the valves or cocks are to be indicated at the valves and cocks and at the remote control positions.

(iii) In the case of very small tanks consideration will be given to the omission of remote controls.

(iv) Every fuel oil suction pipe which is led into the engine and boiler spaces, from a tank situated above the double bottom outside these spaces, is to be fitted in the machinery space with a valve controlled as in 4.4.3(h)(ii), except where the valve on the tank is already capable of being closed from and accessible position above the bulkhead deck.

(v) Where the filling pipes to deep oil tanks are not connected to the tanks near the top, they are to be provided with non-return valves at the tanks or with valves or cocks fitted and controlled as in 4.4.3(h)(ii).

(i) Water drainage from settling tanks

(i) Settling tanks are to be provided with means for draining water from the bottom of the tanks.

(ii) If settling tanks are not provided, the fuel oil bunkers or daily service tanks are to be fitted with water drains.

Open drains for removing the water from oil tanks are to be fitted with valves or cocks of self-closing type, and suitable provision is to be made for collecting the oily discharge.

(j) Relief valves on oil heaters

Relief valves are to be fitted out the oil side of heaters and are to be adjusted to operate at a pressure of 0.35 MPa above that of the supply pump relief valve, see 4.4.3(c). The discharge from the relief valves is to be led to a safe position.

(k) Filling arrangements

(i) Filling stations are to be isolated from other spaces and are to be efficiently drained and ventilated.

(ii) Provision is to be made against over-pressure in the filling pipelines, and any relief valve fitted for this purpose is to discharge to an overflow tank or other safe position.

(l) Transfer arrangements for passenger ships

In passenger ships, provision is to be made for the transfer of fuel oil storage or settling tank to any other fuel oil storage or settling tank in the event of fire or damage.

(m) Alternative carriage of fuel oil and water ballast

(i) Where it is intended to carry fuel oil and water ballast in the same compartments alternatively, the valves or cocks connecting the suction pipes of these compartments with the ballast pump and those connecting them with the fuel oil transfer pump are to be so arranged that the oil may be pumped from any one compartment by the fuel oil pump at the same time as the ballast pump is being used on any other compartment. In passenger ships the arrangement will require to be specially approved.

(ii) Where settling or service tanks are fitted, each having a capacity sufficient to permit 12 hours normal service without replenishment, the above requirement may be dispensed with.

(iii) Attention is drawn to the statutory regulations issued by National Authorities in connection with the International Convention for the Prevention of Pollution from ships (MARPOL), 1973/78.

(n) Deep tanks for the alternative carriage of oil, water ballast or dry cargo

(i) In the case of deep tanks which can be used for the carriage of fuel oil, water ballast or dry cargo, provision is to be made for blank flanging the oil and water ballast filling and suction pipes, also the steam heating coils if retained in place, when the tank is used for dry cargo, and for blank flanging the bilge suction pipes when the tanks are used for oil or water ballast.

(ii) If the deep tanks are connected to an overflow system, the arrangements are to be such that liquid or vapour from other tanks cannot enter the deep tanks when dry cargo is carried in them.

(o) Separation of cargo oils from fuel oil

Pipes conveying vegetable oils or similar cargo oils are not to be led through fuel oil tanks, nor are oil fuel pipes to be led through tanks containing these cargo oils. For requirements regarding provision of cofferdams between oil and water tanks, see 5.4.4 of Part II.

(p) Fresh water piping

Pipes in connection with compartments used for storing fresh water are to be separate and distinct from any pipes which may be used for oil or oily water, and are not to be led through tanks which contain oil, nor are oil pipes to be led through fresh water tanks.

(q) Separate fuel oil tanks

(i) Where separate fuel oil tanks are permitted, their construction is to be in accordance with the requirements of q(ii) to q(vi), see SOLAS Regulation II-2/4.2.2.3.2.

(ii) In general, the minimum thickness of the plating of service, settling and other oil tanks, where they do not form part of the structure of the ship, is to be 5 mm, but in the case of very small tanks, the minimum thickness may be 3 mm.

(iii) For rectangular steel tanks of welded construction, the plate thicknesses are to be not less than those indicated as in the Table VI 4-1. The stiffeners are to be of approved dimensions.

Table VI 4-1
Plate Thickness of Separate Fuel Oil Tanks

Thickness of plate, mm	Head from bottom of tank to top of overflow pipe, metres				
	2.5	3.0	3.7	4.3	4.9
	Breadth of panel, mm				
5	585	525	—	—	—
6	725	645	590	—	—
7	860	770	700	650	—
8	1000	900	820	750	700
10	1280	1140	1040	960	900

(iv) The dimension given in Table VI 4-1 for the breadth of the panel is the maximum distance allowable between continuous lines of support, which may be stiffeners, washplates or the boundary of the tank.

(v) Where necessary, stiffeners are to be provided, and if the length of the stiffener exceeds twice the breadth of the panel, transverse stiffeners are also to be fitted, or, alternatively, tie bars are to be provided between stiffeners on opposite sides of the tank.

(vi) On completion, the tanks are to be tested by a head of water equal to the maximum to which the tanks may be subjected, but not less than 2.5 m above the crown of the tank.

(r) Fuel oil service tanks

(i) An fuel oil service tank is an fuel oil tank which contains only the required quality of fuel ready for immediate use.

(ii) Two fuel oil service tanks or equivalent arrangements are to be provided for each type of fuel used on board which is necessary for propulsion and vital systems. Each tank is to have a capacity for operation at least 8 hours at sea for the propulsion plant at maximum continuous rating and for the generating plant at normal load with that tank.

(iii) The arrangement of fuel oil service tanks is to be such that one tank can continue to supply fuel oil when the other is being cleaned or opened up for repair.

(iv) For ships of less than 500 gross tonnage, the capacity of each fuel oil service tank required by 4.4.3(r)(ii) may be less than for eight hours operation, where the class notation includes a service restriction.

(v) Equivalent arrangement noted in 4.4.3(r) can refer to IACS UI SC123.

4.4.4 Fuel oil having a flash point at or below 60°C

(a) Where it is intended to burn fuels of a flash point 60°C closed-cup test, or less, this fact is to be indicated clearly on the arrangement submitted and the following additional requirements are to be complied with.

(b) The fuel oil in the storage tanks is not to be heated to more than 38°C and in order to readily ascertain the temperature, thermostats or thermometers are to be fitted in main suction lines of transfer and service pumps.

(c) Air pipes are to extend at least 2.4 m above the weather deck or other effective arrangements which have been approved are to be provided.

(d) When it is desired to carry a quantity of fuel oil having a flash point below 55°C for boilers and below 43°C for special services, full particulars of proposed arrangements are to be submitted for special consideration. Tanks intended to contain such fuel oils are to be installed either on deck or in suitably ventilated compartments separated by metallic bulkheads from the boiler and engine rooms.

4.5 Lubricating Oil and Hydraulic System

4.5.1 General

(a) Where lubricating oil for the main engine(s) is circulated under pressure, a standby lubricating oil pump is to be provided where the following conditions apply:

(i) The lubricating oil pump is independently driven and the total output of the main engine(s) exceeds 375 kW.

(ii) One main engine with its own pump is fitted and the output of the engine exceeds 375 kW.

(iii) More than one main engine each with its own lubricating oil pump is fitted and the output of each engine exceeds 375 kW.

(b) The standby pump is to be of sufficient capacity to maintain the supply of oil for normal conditions with any one pump out of action. The pump is to be fitted and connected ready for immediate use, except that where the conditions referred to in 4.5.1(a)(iii) apply a complete spare pump may be accepted. In all cases satisfactory lubrication of engines is to be ensured while starting and maneuvering.

(c) Similar provisions to those of 4.5.1(a) and (b) are to be made where separate lubricating oil systems are employed for piston cooling, reduction gears, oil operated couplings and controllable pitch propellers, unless approved alternative arrangements are provided.

(d) Independently driven pumps of rotary type are to be fitted with a non-return valve on the discharge side of the pump.

(e) The lubricating oil piping is to be entirely separate from other piping systems and the lubricating tank is not to form a part of the ship's structure unless it is separated from other tanks by a cofferdam or other equivalent arrangement made to prevent contamination of the oil. If impracticable in small ships, the construction plan and welding process are to be submitted for special consideration.

(f) For ship of 100 meter and above in length where lubricating oil drain tank must inevitably be fitted directly to the ship's bottom, the drain lines to these are to be fitted with means of shut-off which can be operated in emergency from an easily accessible position.

(g) Sight flow glasses may be used in lubricating systems provided they are fire resistant.

(h) The requirements specified in 4.4.1(h)(viii) are to be complied with insofar as they are applicable for the lubricating oil and hydraulic system.

4.5.2 Oil coolers and filters

(a) The machinery having forced lubrication is to be fitted with a duplex type filter or two filters so arranged that one filter can be opened up and cleaned when the other is in use.

(b) Where a filter is fixed on the discharge side of the lubricating oil pump, a relief valve in close circuit is to be fitted between the pump and the filter, if the pump is capable of developing a pressure exceeding the design pressure of the system.

(c) Magnetic filters are to be provided for lubricating oil system of propulsion turbines and their gears.

(d) The filters are to be capable of being cleaned without stopping the engine or reducing the supply of filtered oil to the engine.

(e) Proposals for an automatic by-pass for emergency purpose in high speed engines are to be submitted for special consideration.

(f) Where oil coolers are fitted, two separate means are to be provided for circulating water through the coolers.

4.5.3 Safety devices

(a) An alarm device is to be fitted to give warning in case the lubricating oil system fails to work properly.

(b) Main propelling turbines and turbo generators are to be so designed that in case the lubricating oil system fails to work properly, the steam supply to the turbines is to be shut off automatically. For the main propelling turbines, this device is needed only on the steam supply to the ahead turbine (See 2.5.4(c) of Part IV).

(c) An automatic emergency supply of lubricating oil is to be provided for propulsion turbines in the event of a failure of the supply from the pump. Where the gravity tank is used as the emergency supply device it is to contain sufficient lubricating oil to supply the system for not less than 6 minutes or in the case of propulsion turbo-generator until the unloaded turbine comes to stop from its maximum rated running speed. Alternatively, the supply may be provided by the standby pump or by an emergency pump, they will start automatically while the pressure of lubricating oil system drops to a certain predetermined value.

4.5.4 Hydraulic systems

(a) The arrangements for Class I hydraulic piping systems are to be in accordance with the requirements of Chapter 2 in this Part. Plans showing clearly the arrangements and details are to be submitted for review.

(b) Hydraulic power cylinders

(i) General

Hydraulic cylinders subject to Classes I and II are to be designed, constructed and tested in accordance with a recognized standard for hydraulic power cylinders.

(ii) Non-compliance with a recognized standard

As an alternative to 4.5.4(b)(i) above, hydraulic cylinders subject to Classes I and II and which are not constructed to a recognized standard may be accepted based on the following:

(1) Regardless of diameter, the design of the cylinder is to be shown to comply with one of the following:

- A recognized pressure vessel code
- The requirements of Part V of the Rules

  For instance, the cylinder is to have a wall thickness not less than that given by 3.1 of Part V of the Rules, and the cylinder ends are to meet the requirements of flat heads in 3.2 of Part V of the Rules.
- Verification through burst tests

  Steel cylinders (other than cast steel) are to withstand not less than 4 times the maximum allowable working pressure, while cast steel, cast iron and nodular iron cylinders are to withstand not less than 5 times the maximum allowable working pressure.

Documentation in this regard is to be submitted for review.

(2) Each individual unit is to be hydrostatically tested to 1.5 times the maximum allowable working pressure (2 times, for cast iron and nodular iron cylinders) by the manufacturer. A test certificate is to be submitted.

(3) Each cylinder is to be affixed with a permanent nameplate or marking bearing the manufacturer's name or trademark and the maximum allowable working pressure and temperature.

(iii) Materials

The materials of hydraulic power cylinders addressed in 4.5.4(b)(i) and (ii) above are to comply with the following:

(1) The materials of the cylinders are to comply with the requirements of the standard or code to which they are designed and constructed.

(2) Ordinary cast iron having an elongation of less than 12% is not to be used for cylinders expected to be subjected to shock loading.

(3) Copies of certified mill test reports are to be made available to the Surveyor upon request.

(iv) Rudder actuators

Rudder actuators are to comply with the material requirements of 4.1.5(a) of Part IV of the Rules, be designed in accordance with 4.2.17 of Part IV of the Rules, and to be tested in accordance with 4.7 of Part IV of the Rules.

(v) Cylinders for Class III piping systems

Cylinders subject to Class III piping systems as defined in Table VI 1-1 may be used in accordance with the manufacturer's rating and verification of suitable for the intended service.

(vi) Exemptions

Hydraulic power cylinders that do not form part of the ship's piping systems, machinery or equipment covered in Part IV, Part V, Part VI of the Rules are exempt from the requirements of 4.5.4(b). However, those hydraulic power cylinders which are integrated into piping systems associated with optional classification notations are to comply with the requirements of 4.5.4(b).

4.5.5 Hydraulic system for essential services

Unless otherwise specified, the requirements in 4.5.5 apply to all hydraulic sysems intended for essential services in accordance with Part IV 1.3 of the Rules.

(a) The hydraulic piping system is to be so arranged that the transfer between power units can be readily effected.

(b) Pipes joints, valves, flanges and other fittings are to comply with the requirements of this Part. The design pressure for calculations to determine the scantlings of piping and other steering gear components subjected to internal hydraulic pressure is to be at least 1.25 times the maximum working pressure to be expected under the operational condition specified in 4.2.2 (b) of Part IV, taking into account any pressure which may exist in the low pressure side of the system. Fatigue criteria may be applied for the design of piping and components, taking into account pulsating pressures due to dynamic loads.

(c) Arrangements for bleeding air from the power actuating system are to be provided where necessary.

(d) Relief valves are to be fitted to any part of the hydraulic system which can be isolated and in which pressure can be generated from the power source of external forces. The setting of relief valves is not to exceed the design pressure. The valves are to be of adequate size and so arranged as to avoid an undue rise in pressure above the design pressure.

(e) Relief valves for protecting any part of the hydraulic system which can be isolated, as required by 4.5.5(d) above are to comply with the following:

(i) The setting pressure is not to be less than 1.25 times the maximum working pressure.

(ii) The minimum discharge capacity of the relief valve(s) is not to be less than 110% of the total capacity of the pumps which can deliver through it (them). Under such conditions the rise in pressure is not to exceed 10% of the setting pressure. In this regard, due consideration is to be given to extreme foreseen ambient conditions in respect of oil viscosity.

(f) Flexible hoses

(i) Hose assemblies approved by the Society may be installed between 2 points where flexibility is required but are not to be subjected to torsional deflection (twisting) under normal operating conditions. In general, the hose is to be limited to the length necessary to provide for flexibility and for proper operation of machinery.

(ii) Hoses are to be high pressure hydraulic hoses according to recognized standards and suitable for fluids, pressures, temperatures and ambient conditions in question.

(iii) Burst pressure of hoses is to be not less than 4 times the design pressure.

(g) The hydraulic power operated steering gear is to be provided with:

(i) arrangements to maintain the cleanliness of the hydraulic fluid taking into consideration the type and design of the hydraulic system,

(ii) a low level alarm for each hydraulic fluid tank to give the earliest practicable indication of hydraulic fluid leakage. Audible and visual alarm are to be given on the navigating bridge and in the machinery space where they can be readily observed, and

(iii) a fixed storage tank having a sufficient capacity to recharge at least one power actuating system including the hydraulic fluid tank, where the main steering gear is required to be power operated. The storage tank is to be permanently connected by piping in such a manner that the hydraulic system can be readily recharged from a position within the steering gear compartment and provided with a content gauge.

(h) Hydraulic power installations are to include at least two power units so designed that the services supplied by the hydraulic power installation can operate simultaneously with one power unit out of service. A reduction of the performance may be accepted.

Low power hydraulic installations not supplying essential services may be fitted with a single power unit, provided that alternative means, such as a hand pump, are available on board.

(i) Hydraulic fluids are to have a flashpoint not lower than 150°C and be suitable for intended purpose under all operating service conditions. The hydraulic oil is to be replaced in accordance with the specification of the manufacturer.

(j) Means for filtration and cooling of the fluid shall be incorporated in the system where found necessary.

(k) Accumulators, if fitted, the hydraulic side of the accumulators which can be isolated is to be provided with a relief valve or another device offering equivalent protection in case of overpressure.

(l) Where applicable, requirements for the prime mover and pump of the power unit are to be in accordance with Part VII, Chapter 1, Chapter 4 and 9 as well as Part IV, Chapter 4.

(m) Where applicable, requirements for the hydraulic cylinders are to be in accordance with 4.5.4(b) above.

4.6 Starting Air System

4.6.1 Air compressors

(a) Where the main propelling engine is arranged for air starting, 2 or more air compressors are to be provided and at least one of these compressors is to be independently driven by means other than the main propelling engine. However, in small installations, a certain arrangement, such as an air charging valve, in which a working cylinder is used for charging air vessels, may replace one engine driven compressor. The charging valve is to be of heat resistant, nonscaling material and is to be satisfactorily cooled.

(b) The total capacity of starting air compressors together with a topping-up compressor where fitted is to be sufficient for charging air vessels from atmospheric pressure to the pressure required for the consecutive starts prescribed in 4.6.2(d) of this Part within one hour. This capacity is, as far as possible, to be approximately equally divided between the number of compressors fitted excluding any emergency compressor, otherwise up to 1/3 of this capacity may be supplied by the engine driven compressor and the remaining is to be supplied by the independently driven compressors.

(c) If starting air is required for starting the prime mover which directly drives the independent air compressor or which supplies current for an electrically driven compressor, an emergency air compressor with a power driving unit not requiring air for starting is to be provided for initially charging air vessels. The emergency air compressor may be connected to a correspondingly smaller air vessel, the capacity of which is such that the prime mover of one of the independent compressors as specified in 4.6.2(c) can be sufficiently started in the cold condition. A hand compressor may be used for this purpose only if it is capable to charge, within one hour, an air vessel of sufficient capacity to provide 3 consecutive starts of a main propelling engine or of a prime mover capable of operating one of the compressors mentioned in 4.6.2(c).

(d) The air intake for compressors is to be located in the atmosphere reasonable free from oil vapour or, alternatively, an air duct from outside the machinery space is to be led to the compressor.

4.6.2 Air vessels

(a) The starting air supply for main propelling engine is to be distributed between at least 2 air vessels to ensure the working of the installation. The capacity of the smaller air vessel, in the case of uneven distribution of the air supply, is not to be less than approximately 1/3 of the required total capacity.

(b) Where engines are installed in several engine compartments, air vessels are to be correspondingly distributed among engine compartments.

(c) The air supply in accordance with 4.6.2(d) and(e) of this Part is exclusively for operation of main propelling engines, and separate air vessels are to be provided for auxiliary machinery unless an adequate surplus of starting air or a correspondingly increased compressor capacity is available. The same is applied to pneumatic control and maneuvering equipment and to the air supply necessary for whistle and other air consuming devices.

(d) The total capacity of air vessels required to start main propelling engines is to be sufficient to provide, without replenishment, not less than the consecutive starts C as shown in Table VI 4-2.

(e) The similar engine driving electric generators as main propelling engines, the total capacity of air vessels is to be at least that obtained by using the following consecutive starts C as given in Table VI 4-3.

(f) Where there are several similar auxiliary engines, the total capacity of air vessels is to be at least that obtained by using the following consecutive starts C:
18 for 2 auxiliary engines,
24 for 3 auxiliary engines,
30 for 4 auxiliary engines and more.

(g) For engines having different number of cylinders and/or main dimensions in 4.6.2(e) and (f) above, and for main propelling engine installations not specified in the preceding, the consecutive starts C required are to be approved in each case.

Table VI 4-2
Consecutive Starts C for Diesel Engine

Type \ Quantity	1 engine	2 engines	3 or more engines
Reversible Engines	12	12 (6 per engine)	3 per engine(1)
Non-reversible Engines	6	6 (3 per engine)	3 per engine(1)

Note:
(1) However, the total capacity is not to be less than 12 starts and need not exceed 18 starts.

Table VI 4-3
Consecutive Starts C for Diesel-driven Electric Propulsion

No. of Diesel-driven Electric Generators	1	2	3 and over
C	6	8	12

4.6.3 Starting air piping

(a) The air discharge pipe from the compressor is to be led direct to the starting air vessel. Efficient oil and water separators are preferably to be fitted in the discharge pipe between compressors and air vessels.

(b) The starting air piping from air vessels to main and auxiliary engines is to be entirely separated from the compressor discharge piping. The stop valve on the air vessel is to permit slow opening to avoid pressure shock in the starting air piping.

(c) Drain arrangements for removing accumulations of oil and water are to be fitted on the compressor, separator, air vessel and any low-level pipe line at suitable positions permitting drains to be effectively blown out under extreme conditions of trim.

(d) Where the starting air vessel can be isolated from any relief valve in the starting air system, a fusible plug is to be provided to release air at a temperature not more than 150°C in the case of fire.

(e) In order to protect starting air mains against explosions arising from improper functioning of starting valves, an isolation non-return valve of equivalent is to be installed at the starting air supply connection to each engine. Where cylinder bores exceed 230 mm, a bursting disc or flame arrester is to be fitted in way of the starting valve of each cylinder for direct-reversing engines having a main starting manifold or at the supply inlet to the starting air manifold for non-reversing engines.

4.7 Thermal Oil Systems

4.7.1 General

As for the location and valves fitted to the pumps of thermal oil systems, the requirements are to be complied with 4.4 (in these case the term "fuel oil" is to be read as "thermal oil").

4.7.2 Thermal oil systems

Thermal oil systems are to comply with the following requirements:

(a) Expansion tanks are to be provided with liquid level indicator.

(b) Circulating pumps are also to be cable of being stopped from a suitable position other than a space in which thermal oil heaters are situated.

(c) Circulating pumps are to be provided with a pressure measuring device at a suitable position on the delivery and suction sides.

(d) The inlet and outlet valves on thermal oil heaters are to be controllable from outside the compartment where they are installed, unless an arrangement for quick gravity drainage of thermal oil contained in the system into a collecting tank is made.

4.7.3 Pumps for thermal oil heater

The important thermal oil heater is to be provided with two thermal oil circulating pumps and two fuel oil burning pumps. However, where alternative means are available to ensure the normal navigation and cargo heating with these pumps being out of operation, only one pump will be accepted respectively.

4.7.4 Heating of liquid cargoes with flash points below 60°C

Heating of liquid cargoes with flash points below 60°C is to be arranged by means of a separate secondary system, located completely with in the cargo area unless in the case as deemed appropriate by the Society.

4.7.5 The requirements specified in 4.4.1(h)(viii) are to be complied with in so far as they are applicable for the thermal oil system.

4.8 Exhaust Gas Piping Arrangement

4.8.1 Exhaust gas pipes from diesel engines

(a) In principle, exhaust gas pipes of two or more diesel engines are not to be connected together. Where these pipes are connected to a common silence, effective means are to be provided to prevent the exhaust gas from returning into cylinders of non-operating engines.

(b) Exhaust gas piping lines led overboard near the water line are to be so arranged as to prevent water from being siphoned to the cylinders.

(c) Boiler uptakes and exhaust piping lines from diesel engines are not to be connected together, except where the boilers and arranged to utilize the waste heat from the diesel engines.

4.8.2 Exhaust gas pipes from boilers

In case where dampers are installed in the funnels or uptakes of boilers, their degree of opening is not to be reduced to 2/3 or less of the flue area when closed. They are to be capable of locking in any open position and the degree of opening is to be clearly indicated.

4.8.3 Exhaust gas pipes from incinerators

In case where incinerator exhaust gas pipes are of a shape (e.g., U-shaped, etc.) which is susceptible to the accumulation of unburnt matter, a cleaning hole is to be provided for maintenance at the parts where said unburnt matter is expected to easily accumulate.

Chapter 5

Oil Tankers Piping Systems

5.1 General

5.1.1 For ships having the notation "Oil Tanker" the requirements of this Chapter are to be complied with.

5.1.2 The following Rules apply to oil tankers of normal design with the propelling machinery placed aft. Otherwise, special approval is to be required.

5.1.3 The requirements are primarily intended for ships which are to carry flammable liquids having a flash point not exceeding 60°C (closed cup test).

5.1.4 Where ships are intended to carry specific cargoes which are non-flammable or which have a flash point exceeding 60°C, the requirements will be modified, where necessary, to take account of the lesser hazards associated with the cargoes.

5.1.5 Bilge, ballast, fuel oil or other pipe connections, which do not deal with cargo oil, are to comply with the requirements for general cargo ships in so far as they are applicable, and, in addition, with the requirements stipulated in this Chapter.

5.1.6 In addition to the plans and particulars required in Chapter 1 of this Part, the following plans are to be submitted for consideration and approval:

(a) Pumping arrangement at the fore and aft ends and drainage of cofferdams and pump rooms.

(b) General arrangement of cargo pipe in tanks and on deck.

(c) General arrangement of cargo oil tank vents.
The plan is to indicate the type and position of the vent outlets from any superstructure, erection, air intake, etc.

(d) Arrangement of inert gas piping system.

(e) Piping arrangements for cargo oil pipes.

(f) Ventilation arrangements of cargo and/or ballast pump rooms and other enclosed spaces which contain cargo handling equipment.

(g) Other plans and data considered necessary by the Society.

5.2 Piping Arrangements

5.2.1 A complete system of pumps and piping for cargo oil is to be fitted and entirely separated from other piping systems on board the ship except the draining system of the pump room as provided in 5.4.6 of this Chapter.

5.2.2 Cargo oil piping systems are to be entirely separate from all other piping systems and are neither to pass through fuel oil tanks nor spaces containing machinery where sources of vapor ignition are normally present but may however, through tanks used exclusively for ballasting located within the cargo oil tank range. Bilge, ballast, fuel oil or other pipes connected to pumps at the ends of the ship are not to pass through cargo oil tanks nor to have any connections with the tanks.

5.2.3 Soil line and sanitary drains may be led overboard through cargo oil tanks but the number of such pipes is to be held to a minimum by combining as many drains as possible. The line within the tank is to be of steel pipes having a wall thickness not less than 16 mm and all joints welded.

5.2.4 Where the sea suction is provided for ballasting purpose, two valves are to be fitted between the sea chest and cargo piping, one of which is to be capable of being locked in the closed position.

5.2.5 Expansion joints or bends are to be provided in the cargo oil pipe line where necessary and to have a sufficient strength.

5.2.6 Cargo oil piping systems are to be so arranged that oil retention in the lines is minimized.

5.3 Cargo Pumps

5.3.1 Cargo pumps are to be capable of being controlled at the pumps as well as from a readily accessible position outside the pump room.

5.3.2 Cargo pumps are to be provided with effective escape valves discharging back to the suction side. However, where a centrifugal pump is used, the escape valve may be omitted and provided it is so designed that the pressure on the delivery side does not exceed the designed pressure of the piping system. A bypass is to be provided around the pump for use when cargo loading is through the suction piping.

5.3.3 Cargo pumps are to be so designed as to minimize the danger of sparking and oil leakage at the stuffing box.

5.3.4 A pressure gauge is to be fitted at the delivery side of each pump. Where a pump is driven by the prime mover which is installed in any other compartment, an additional gauge is to be fitted at a position suitable for the controlling of the prime mover.

5.3.5 Alarm and safety arrangements are to be provided as indicated in Table VI 5-1.

Table VI 5-1
Cargo Pump Alarm

Item	Alarm	Note
Bulkhead gland temperature	High	Any machinery item
Pump bearing and casing temperature	High	Any machinery item

5.4 Cargo Pump Rooms

5.4.1 Cargo pumps are to be placed in a separate pump room having oil-tight bulkheads. The pump room is to be accessible only from the weather deck.

5.4.2 A separate pump room is to be situated forward of the cargo oil tank to deal with bilge drainage, filling and emptying of the ballast and fuel oil tanks, and the cofferdam at the forward end of the ship, where fitted.

5.4.3 Pump rooms are to be provided with ready means of access and adequate ventilation.

(a) Cargo pump rooms are to be provided with permanent ventilation systems of the mechanical type.

(b) The outlets of exhaust ducts are to be led to the safe position above the open deck and to be fitted with wire mesh screens with mesh of suitable size.

(c) The ventilation systems are to be capable of at least 20 air changes per hour, based on the gross volume of the pump room.

(d) The ventilation fan is to be of non-sparking construction. Where ventilation systems are driven by shaft passing through a pump room bulkhead or deck, gastight stuffing boxes of a type approved by the Society are to be fitted to shafts at the position of passing.

(e) The ducts are to be arranged, to permit ventilation from the vicinity of cargo pump room bilge, above the transverse floor plate or bottom longitudinal. An emergency intake located nearly 2 m above the cargo pump room lower grating is to be arranged to the ducts, and this emergency intake is to have a damper which is capable of being opened or closed from the weather deck and lower grating level.

5.4.4 Where a shaft or a control rod passes through the pump room, a flexible coupling or flexible joint is to be provided in the shaft between the pump and the prime mover or the control rod respectively, and the stuffing box is also to be fitted at the bulkhead.

5.4.5 The pump room bilge suction or the suction from cofferdam adjacent to cargo oil tanks is not to enter the machinery space.

5.4.6 Provision is to be made for removing drainage from the pump room bilge and the adjacent cofferdam. A separate bilge pump, an ejector, or a bilge suction from a cargo pump or cargo stripping pump may be provided for this purpose. Where a bilge suction is provided from a cargo or stripping pump, a screw-down non-return valve is to be fitted in the bilge suction branch and, in addition, an isolating valve or a cock is to be fitted on the pump connection to the bilge chest. For small ships, the drainage may be dealt with by means of a hand pump having a suction bore of at least 50 mm.

5.4.7 Bilge pumps and bilge suction valves in the pump room are to be provided with means of control from either inside of the pump room entrance above the freeboard deck or from outside the pump room.

5.4.8 Alarm and safety arrangements are to be provided as indicated in 5.4.9 and Table VI 5-2.

Table VI 5-2
Pump Room Alarm

Item	Alarm	Note
Bilge level	High	--
Hydrocarbon concentration	High	> 10% LEL

5.4.9 A system for continuously monitoring the concentrations of hydrocarbon gases within the cargo pump room is to be fitted. Monitoring points are to be located in positions where potentially dangerous concentrations may be readily detected. Gas analyzing units with non-safe-type measuring equipment may be located outside cargo areas (e.g. in cargo control room, navigation bridge or engine room when mounted on the forward bulkhead) provided that:

(a) sampling lines do not pass through gas safe spaces, except where permitted by (e);

(b) the gas sampling pipes are fitted with flame arresters. Sample gas is to be led to the atmosphere with outlets arranged in a safe location, in the open atmosphere;

(c) bulkhead penetrations of sample pipes between safe and dangerous areas are of an approved type. A manual isolating valve is to be fitted in each of the sampling lines at the bulkhead in the safe area;

(d) the gas detection equipment including sampling piping, sampling pumps, solenoid valves and analyzing units, are located in a fully enclosed steel cabinet, with a gasketed door, monitored by its own sampling point. At gas concentrations above 30% LEL inside the steel cabinet, the entire gas-analyzing unit is to be automatically shutdown; and

(e) where the cabinet cannot be arranged on the bulkhead, sample pipes are to be steel or other equivalent material and without detachable connections, except for the connection points for isolating valves at the bulkhead and analyzing units. The sampling pipes are to be led by their shortest route.

5.5 Cargo Oil Tanks and Cofferdam

5.5.1 Each cargo oil tank is to be provided with a breather valve operating automatically to regulate the pressure or vacuum in the tank, or a branch vent line from each tank connected to a common header having its outlet led up to the mast or other high post to a safe height above the weather deck. The outlets from the vent pipes are to be fitted with

either a flame arrester of a renewable type or the above-mentioned breather valve. A positive means for releasing the pressure of the breather valve is to be provided.

5.5.2 Means is to be provided for ventilation and gas freeing of cargo tanks and adjacent compartments such as a cofferdam.

5.5.3 Smothering pipes for cargo oil tanks or the cargo oil pipe line are to be fitted with a non-return valve to prevent contamination of the cargo from one tank to another and the main supply to these connections is to be fitted with a master valve placed in a readily accessible position clear of the tanks.

5.5.4 Steam heating coils if provided are to be in compliance with 4.2.2(a) and (b) of this Part.

5.5.5 Ullage plugs or sighting ports are to be provided at each cargo tank to enable the level of oil to be ascertained. It is not to be fitted in any enclosed space.

5.5.6 Cofferdams are not to have any direct connections to cargo oil tanks or cargo oil lines.

5.5.7 Cofferdams are to be provided with effective draining suctions. Sounding pipes and air pipes are to be provided and led to the open deck. The air pipes are to be fitted with a wire gauze at their outlets.

5.6 Slop Tanks

5.6.1 The requirements in 5.6.2 to 5.6.7 are applicable to ships intended for the carriage of ore or oil when oil residues are to be retained in the slop tanks and the ship is otherwise gas free.

5.6.2 Slop tanks are to be provided with an approved independent venting system.

5.6.3 At least two portable instruments are to be available on board for gas detection.

5.6.4 Means are to be provided for isolating the piping connecting the pump room with the slop tanks. The means of isolation is to consist of a valve followed by a spectacle flange or a spool piece with appropriate blank flanges. This arrangement is to be located adjacent to the slop tanks, but where this is unreasonable or impracticable it may be located within the pump room directly after the piping penetrates the bulkhead. A separate pumping and piping arrangement is to be provided for discharging the contents of the slop tanks directly over the open deck when the ship is in the dry cargo mode.

5.6.5 Adequate ventilation is to be provided for spaces surrounding slop tanks.

5.6.6 Warning notices are to be erected at suitable points detailing precautions to be observed prior to the ship loading or unloading, or when the ship is carrying dry cargo with liquid in the slop tanks.

5.6.7 In order to satisfy the requirements of certain National and/or Terminal Authorities, it may be necessary to provide an inert gas system for blanketing the slop tank contents.

5.7 Piping Arrangement of Crude Oil Washing Systems

5.7.1 Piping arrangement of crude oil washing system is to comply with the requirements in 5.7.2 to 5.7.11 of this Part.

5.7.2 The crude oil washing pipes and all valves incorporated in the supply piping system are to be of steel or other equivalent material and are to be of adequate strength having regard to the pressure to which they may be subjected and are to be properly jointed and supported.

5.7.3 The crude oil washing system is to consist of permanent pipework and is to be independent of the fire mains or any system other than for tank washing except that sections of the ship's cargo system may be incorporated into the crude oil washing system where approved by the Society. In combination carriers the arrangement are to allow removal

of the equipment if necessary, when carrying non-liquid cargoes and are to be such that when reinstated the system is originally fitted so as to keep oil tightness.

5.7.4 Provision is to be made to prevent overpressure in the tank washing supply piping. Any relief device fitted to prevent overpressure is to discharge into the suction side of the supply pump. Alternative methods to the satisfaction of the Society may be accepted provided an equivalent degree of safety and environmental protection is provided.

5.7.5 Where hydrant valves are fitted for water washing purposes on tank washing lines, all such valves are to be to adequate strength and provisions made for such connections to be blanked off when washing lines may contain crude oil.

5.7.6 All connections for pressure gauges or other instrumentation are to be provided with isolating valves adjacent to the lines on the fitting is to be of the sealed type.

5.7.7 No part of the crude oil washing system is to enter machinery spaces. Where the tank washing system is fitted with a steam heater for use when water washing, the heater is to be effectively isolated during crude oil washing by double shut-off valves or by clearly identifiable blanks.

5.7.8 Where a combined crude oil-water washing supply piping is provided the piping is to be so designed that it can be drained so far as is practicable of crude oil, before water washing is commenced, into suitable spaces such as slop tank or other cargo spaces.

5.7.9 The piping system is to be of such a diameter that the greatest number of tank cleaning machines required can be operated simultaneously at the designed pressure and throughout. The arrangement of the piping is to be such that the required number of tank cleaning machines to each cargo compartment can be operated simultaneously.

5.7.10 The crude oil washing supply piping is to be anchored (firmly attached) to the ship's structure at appropriate locations, and means are to be provided to permit freedom of movement elsewhere to accommodate thermal expansion and flexing of the ship. The anchoring is to be such that any hydraulic shock can be absorbed without undue movement of the supply piping. Anchors are normally to be situated at the ends furthest from the entry of the crude oil supply to the supply piping. If tank washing machines are used to anchor the ends of branch pipes then special arrangements are necessary to anchor these sections when the machines are removed for any reason.

5.7.11 Means is to be provided to drain all cargo pumps and lines at the completion of cargo discharge, where necessary, by connection to a stripping device. The line and pump drainage is to be capable of being discharged both ashore and to a cargo tank or a slop tank. For discharge ashore a pipe line having a cross-sectional area not more than 10% of that of a cargo discharge main line is to be provided for that purpose and connected outboard of the ship's manifold valve.

5.8 Inert Gas System

5.8.1 General

(a) The requirements in this Chapter apply to the inert gas systems using exhaust gas from the ship's main or auxiliary boiler(s) or from a separate inert gas generator.

(b) Inert gas systems other than the above are to be subjected to the special consideration by the Society.

(c) Inert gas systems are to be effectively protected against erosion.

(d) The following plans and documents regarding the ship's inert gas system are to be submitted for approval:
Details and arrangements of inert gas generating plant including all control and monitoring devices (diagram).
Arrangement of piping system for the distribution of inert gas (diagram).
Other plans and documents considered necessary by the Society.
Where, however, the system is the one already approved by the Society, they may be omitted from submission.

(e) The following data are to be submitted for reference:

Instructions and operation manual of the inert gas system.

Data considered necessary by the Society.

(f) Detailed instruction manuals are to be provided on board covering the operations, safety and maintenance requirements and occupational health hazards relevant to the inert gas system and its application to the cargo tank system. The manuals are to include guidance on procedures to be followed in the event of a fault or failure of the inert gas system.

5.8.2 Gas supply

(a) The inert gas supply may be treated flue gas from main or auxiliary boilers, or from one or more separate gas generators or other sources or any combination thereof, provided that an equivalent standard of safety is achieved. Such systems are as far as practicable, to comply with the requirements of this chapter. Systems using stored carbon dioxide are not to be permitted unless the risk of ignition from generation of static electricity by the system itself is minimized to the satisfaction of the Society. In all cases, automatic combustion control is to be fitted. A separate inert gas generator, where installed on board, is to be to the satisfaction of the Society.

(i) The fire protection of the compartment in which any oil fired inert gas generator situated is to meet the requirements in 8.4.1 of Part IX.

(ii) Venting Arrangements are to be made to vent the inert gas from oil fired inert gas generator to the atmosphere when the inert gas produced is off-specification, e.g. during starting-up or in the event of equipment failure.

(iii) Automatic shutdown of the fuel oil supply to inert gas generator is to be arranged on predetermined limits being reached in respect of low water pressure or low water flow rate to the cooling and scrubbing arrangement and in respect of high gas temperature.

(iv) Two fuel oil pumps are to be fitted to the inert gas generator. On condition that sufficient spares for the fuel oil pump prime mover are carried on board to enable any failure of the fuel oil pump and its prime mover to be rectified by the ship's crew, only one fuel oil pump may be permitted under special consideration by the Society.

(b) The system is to be capable of:

(i) inerting empty cargo tanks by reducing the oxygen content of the atmosphere in each tank to a level at which combustion cannot be supported;

(ii) maintaining the atmosphere in any part of any cargo tank with an oxygen content not exceeding 8 per cent by volume and at a positive pressure at all times in port and at sea except when it is necessary for such a tank to be gas free;

(iii) eliminating the need for air to enter a tank during normal operations except when it is necessary for such a tank to be gas free;

(iv) purging empty cargo tanks of hydrocarbon gas, so that subsequent gas freeing operations at no time to create a flammable atmosphere within the tank.

(c) The system is to be capable of delivering inert gas to the cargo tanks at a rate of at least 125% of the maximum rate of discharge capacity of the ship expressed as a volume.

(d) The system is to be capable of delivering inert gas with an oxygen content of not more than 5% by volume in the inert gas supply main to the cargo tanks at any required rate of flow.

(e) Flue gas isolating valves are to be fitted in the inert gas supply mains between the boiler uptakes and the flue gas scrubber. These valves are to be provided with indicators to show whether they are open or shut, and precautions are to be taken to maintain them gastight and keep the seating clear of soot. Arrangements are to be made to ensure that boiler soot blowers cannot be operated when the corresponding flue gas valve is open.

(f) Arrangements are to be provided for cleaning of valves nearest to the uptakes.

5.8.3 Gas scrubber

(a) A flue gas scrubber is to be fitted which is to effectively cool the volume of inert gas specified in 5.8.2(c) and (d) of this chapter and remove solids and sulphur combustion products. The cooling water arrangements are to be such that an adequate supply of water will always be available without interfering with any essential service on the ship. Provision is also to be made for an alternative supply of cooling water.

(b) Filters or equivalent devices are to be fitted to minimize the amount of water carried over to inert gas blowers.

(c) The scrubber is to be located aft of all cargo tanks, cargo pump rooms and cofferdams separating these spaces from machinery spaces of category A.

(d) To permit safe maintenance, an additional water seal or other effective means of preventing flue gas leakage is to be fitted between the flue gas isolating valves and scrubber or incorporated in the gas entry to the scrubber.

5.8.4 Blowers

(a) At least 2 blowers are to be fitted and be capable of delivering to cargo tanks at least the volume of gas required by 5.8.2(c) and (d) of this Part. For systems with gas generators, only one blower may be permitted, if that system is capable of delivering the total volume of gas required by 5.8.2(c) and (d) of this Part to the protected cargo tanks, provided that sufficient spares for the blower and its prime mover are carried on board to enable any failure of the blower and its prime mover to be rectified by the ship's crew.

(b) The inert gas system is to be so designed that the maximum pressure which it can exert on any cargo tank does not exceed the test pressure of any cargo tank. Suitable shut-off arrangements are to be provided on the suction and discharge connections of each blower. Arrangements are to be provided to enable the functioning of the inert gas plant to be stabilized before commencing cargo discharge. If the blowers are to be used for gas freeing, their air inlets are to be provided with blanking arrangements.

(c) The blowers are to be located aft of all cargo tanks, cargo pump rooms and cofferdams separating these spaces from machinery spaces of category A.

(d) Special consideration is to be given to the design and location of scrubber and blowers with relevant piping and fittings in order to prevent flue gas leakage into enclosed spaces.

(e) Means is to be provided for continuously indicating the temperature and pressure of the inert gas at the discharge side of gas blowers whenever the gas blowers are operating.

5.8.5 Cooling water supply

(a) Cooling water arrangements are to be such that an adequate supply of water is always to be available without interfering with any essential service on the ship.

(b) Provision is also to be made for a separate alternative supply of cooling water. Pumps for other purposes may be used for this provision.

(c) A water loop or other approved arrangement is also to be fitted to each associated water supply and drain pipe and each venting or pressure-sensing pipe leading to gas safe spaces. Means is to be provided to prevent such loops from being emptied by vacuum.

5.8.6 Gas distribution line

(a) A gas regulating valve is to be fitted in the inert gas supply main. This valve is to be automatically controlled to close as required. It is also to be capable of automatically regulating the flow of inert gas to the cargo tanks unless means are provided to automatically control the speed of the inert gas blowers required in 5.8.4 of this Part.

(b) The gas regulating valve referred to in (a) above is to be located at the forward bulkhead of the forward most gas safe space through which the inert gas supply main passes.

(c) At least 2 non-return devices, one of which is to be a water seal, are to be fitted in the inert gas supply main, in order to prevent the return of hydrocarbon vapour to the machinery space uptakes or to any gas safe space under all normal conditions of trim, list and motion of the ship. They are to be located between the automatic gas regulating valve and the after most connection to any cargo tank or cargo pipeline.

(d) The non-return devices referred to in (c) above are to be located in the cargo tank area on deck.

(e) The water seal referred to in 5.8.6(c) above is to be capable of being supplied by 2 separate pumps, each of which is to be capable of maintaining an adequate supply at all times.

(f) The arrangements of the seal and its associated fittings are to be such that it prevents backflow of hydrocarbon vapours and ensures the proper functioning of the seal under operating conditions.

(g) Provision is to be made to ensure that the water seal is protected against freezing, in such a way that the integrity of seal is not impaired by overheating.

(h) The deck water seal and all loop arrangements are to be capable of preventing return of hydrocarbon vapours at a pressure equal to the test pressure of the cargo tanks.

(i) The second device is to be a non-return valve or equivalent capable of preventing the return of vapours or liquids and fitted forward of the deck water seal required in 5.8.6(c) above. It is to be provided with positive means of closure. As an alternative to positive means of closure, an additional valve having such means of closure may be provided forward of the non-return valve to isolate the deck water seal from the inert gas main to cargo tanks.

(j) As an additional safeguard against the possible leakage of hydrocarbon liquids or vapours back from the deck main, means is to be provided to permit this section of the line between the valve having positive means of closure referred to in (i) above and the gas regulating valve referred to in (a), (b), (c), (d) and (i) above to be vented in a safe manner when the first of these valves is closed.

(k) The inert gas main may be divided into 2 or more branches forward of the non-return devices required by 5.8.5(c), 5.8.6(c), (d), (e), (f), (g), (h), (i), (j) and 5.8.8(k) of this Part.

(l) The inert gas supply mains are to be fitted with branch piping leading to each cargo tank. Branch piping for inert gas is to be fitted with either stop valves or equivalent means of control for isolating each tank. Where stop valves are fitted, they are to be provided with locking arrangements, which are to be under the control of a responsible ship's officer. The control system operated is to provide unambiguous information of the operational status of such valves.

(m) In combination carriers, the arrangement to isolate the slop tanks containing oil or oil residues from other tanks is to consist of blank flanges which are to remain in position at all times when cargoes other than oil referred to in 5.1.3 are being carried except as provided for in 5.6 of this Part.

(n) Means is to be provided to protect cargo tanks against the effect of overpressure or vacuum caused by thermal variations when the cargo tanks are isolated from inert gas mains.

(o) Piping systems are to be so designed as to prevent the accumulation of cargo or water in pipelines under all normal conditions.

(p) Suitable arrangements are to be provided to enable the inert gas main to be connected to an external supply of inert gas. The arrangements are to consist of a 250 mm nominal pipe size bolted flange, isolated from the inert gas main by a valve and located forward of the non-return valve referred to in 5.8.6(i). The design of the flange is to conform to the appropriate class in the standards adopted for the design of other external connections in the ship's cargo piping system.

5.8.7 Venting arrangement for cargo oil tanks

(a) The arrangements for the venting of all vapours displaced from the cargo tanks during loading and ballasting are to comply with 5.9.1 and are to consist of either one or more mast risers, or a number of high velocity vents. Inert gas supply mains may be used for such venting.

(b) Arrangements for inerting, purging or gas freeing of empty tanks are to be such that the accumulation of hydrocarbon vapours in pockets formed by the internal structural members in a tank is minimized and that:

(i) on individual cargo tanks the gas outlet pipe, if fitted, is to be positioned as far as practicable from the inert gas air inlet. The inlet of such outlet pipes may be located either at deck level or at not more than 1 m above the bottom of the tank,

(ii) the cross sectional area of such gas outlet pipe referred to in (i) above is to be such that an exit velocity of at least 20 m/sec can be maintained when any 3 tanks are being simultaneously supplied with inert gas. Their outlets are to extend not less than 2 m above deck level,

(iii) each gas outlet referred to in (ii) above is to be fitted with suitable blanking arrangements,

(iv) if a connection is fitted between the inert gas supply mains and the cargo piping system, arrangements are to be made to ensure an effective isolation having regard to the large pressure difference which may exist between the systems. This is to consist of 2 shut-off valves with an arrangement to vent the space between the valves in a safe manner or an arrangement consisting of a spool piece with associated blanks; where the valve separating the inert gas supply main from the cargo main and which is on the cargo main side is to be a non-return valve with a positive means of closure.

(c) One or more pressure-vacuum breaking devices are to be provided on the inert gas supply main to prevent the cargo tanks from being subjected to:

(i) a positive pressure in excess of the test pressure of the cargo tank if the cargo are to be loaded at the maximum rated capacity and all other outlets were left shut, and

(ii) a negative pressure in excess of 700 mm water gauge if cargo are to be discharged at the maximum rated capacity of the cargo pumps and the inert gas blowers fail.

Such devices are to be installed on the inert gas main unless they are installed in the venting system required by 5.9.1 of this Part or on individual cargo tanks. The location and design of the devices are to be in accordance with the requirements of 5.8.6(m), 5.8.7(a) and (c) and 5.9.1 of this Part.

5.8.8 Instruments and control apparatus

(a) Instrumentation is to be fitted for continuously indicating and permanently recording, when the inert gas is being supplied:

(i) The pressure of the inert gas supply mains forward of the non-return devices.

(ii) The oxygen content of the inert gas in the inert gas supply mains on the discharge side of the gas blowers.

(b) The devices referred to in (a) above for measuring the pressure and oxygen contents in inert gas mains are to be placed in the cargo control room where provided. But where no cargo control room is provided, they are to be placed in a position easily accessible to the officer in charge of cargo operations.

(c) In addition, meters are to be fitted:

(i) in the navigating bridge to indicate at all times the pressure referred to in (a)(i) above of the inert gas supply mains forward of non-return devices and the pressure in slop tanks of combination carriers, whenever those tanks are isolated from the inert gas supply main; and

(ii) in the machinery control room or in the machinery space to indicate the oxygen content in the inert gas supply main, referred to in (a)(ii) above.

(d) Portable instruments for measuring oxygen and flammable vapour concentration are to be provided. In addition, suitable arrangement is to be made on each cargo tank such that the condition of the tank atmosphere can be determined using these portable instruments.

(e) Suitable means is to be provided for the zero and span calibration of both fixed and portable gas concentration measurement instruments, referred to in (a), (b), (c), and (d) above.

(f) For inert gas system of both the flue gas type and the inert gas generator type, audible and visual alarms are to be provided to indicate.

(i) Low water pressure or low water flow rate to the flue gas scrubber as referred to in 5.8.3(a) of this Part.

(ii) High water level in flue gas scrubber as referred to in 5.8.3(a) of this Part.

(iii) High gas temperature at the discharge of the blowers as referred to in 5.8.4(e) of this Part.

(iv) Failure of the inert gas blowers as referred to in 5.8.4 of this Part.

(v) Oxygen content of inert gas in excess of 8% by volume as referred to in 5.8.8(a)(ii) of this Part.

(vi) Failure of the power supply to the automatic control system for the gas regulating valve and to the indicating devices as referred to in 5.8.6(a) and (b) of this Part for measuring the pressure and oxygen contents of inert gas supply main.

(vii) Low water level in the water seal as referred to in 5.8.6(c) of this Part.

(viii) Low gas pressure less than 100 mm water gauge of gas supply mains forward of the non-return devices as referred to in 5.8.8(a)(i) of this Part. The alarm arrangement is to be such as to ensure that the pressure in slop tanks in combination carriers can be monitored at all times.

(ix) High gas pressure of inert gas supply mains forward of the non-return devices as referred to in 5.8.8(a)(i) of this Part.

(g) Automatic shut-down of inert gas blowers and gas regulating valves is to be arranged on predetermined limits being reached in respect of 5.8.8(f)(i), (ii) and (iii) above.

(h) Automatic shut-down of the gas regulating valve is to be arranged in failure of the inert gas blower as referred to in 5.8.8(f)(iv) of this Part.

(i) When the oxygen content of the inert gas exceeds 8% by volume, immediate action is to be taken to improve the gas quality. Unless the quality of the gas improves, all cargo tank operations are to be suspended so as to avoid air being drawn in to the tanks and the cargo tanks deck isolation valve referred to in 5.8.6(i) of this Part is to be closed.

(j) The alarms required in 5.8.8(f)(v), (vi) and (viii) above are to be fitted in the machinery space and cargo control room, where provided, but in each case in such a position that they are immediately received by responsible members of the crew.

(k) Low water level in the water seal is to be kept an adequate reserve of water at all times and the integrity of the arrangements to permit the automatic formation of the water seal when the gas flow ceases. The audible and visual alarm on the low level of water in the water seal is to operate when the inert gas is not being supplied.

(l) An audible alarm system independent of the low pressure in gas supply main forward of the nonreturn devices or automatic shut-down of cargo pumps is to be provided to operate on predetermined limits of low pressure in the inert gas main being reached.

(m) For inert gas system of the inert gas generator type, additional audible and visual alarm are to be provided to indicate:

(i) insufficient fuel oil supply;

(ii) failure of the power supply to the generator;

(iii) failure of the power supply to the automatic control system for the generator.

5.9 Cargo Oil Tank Venting, Purging and Gas- freeing

5.9.1 Cargo oil tank venting

(a) The venting system of cargo oil tanks are to be entirely distinct from the air pipes of the other compartments of the ship. The arrangements and position of openings in the cargo oil tank deck from which emission of flammable vapours can occur are to be such as to minimize the possibility of flammable vapours being admitted to enclosed spaces containing a source of ignition, or collecting in the vicinity of deck machinery and equipment which may constitute an ignition hazard.

(b) The venting arrangements are to be designed and operated as to ensure that neither pressure nor vacuum in cargo tanks exceeds design parameters and be such as to provide for:

(i) the flow of the small volumes of vapour, air or inert gas mixtures caused by thermal variations in a cargo tank in all cases through pressure/vacuum valves; and

(ii) the passage of large volumes of vapour, air or inert gas mixtures during cargo loading and ballasting, or during discharge.

(iii) A secondary means of allowing full flow relief of vapour, air or inert gas mixtures to prevent overpressure or under-pressure in the event of failure of the arrangements in 5.9.1(b)(ii). Alternatively, pressure sensors may be fitted to monitor the pressure in each tank protected by the arrangement required in 5.9.1(b)(ii), with a monitoring system in the ship's cargo control room or the position from which cargo operations are normally carried out. Such monitoring equipment is also to provide an alarm facility which is activated by detection of overpressure or underpressure conditions within a tank.

(c) The venting arrangements in each cargo tank may be independent or combined with other cargo tanks and may be incorporated into the inert gas piping.

(d) Where the arrangements are combined with other cargo tanks either stop valves or other acceptable means are to be provided to isolated each cargo tank. Where stop valves are fitted, they are to be provided with locking arrangements which are to be under the control of the responsible ship's officer. There is to be a clear visual indication of the operational status of the valves, or other acceptable means. Where tanks have been isolated, it is to be ensured that the relevant isolating valves are opened before cargo loading or ballasting or discharging of those tanks is commenced. Any isolation is to continue to permit the flow caused by thermal variations in a cargo tank in accordance with 5.9.1(b)(i).

(e) The venting arrangements are to be connected to the top of each cargo tank and are to be self-draining to the cargo oil tanks under all normal conditions of trim and list of the ship. Where it may not be possible to provide self-draining lines permanent arrangements are to be provided to drain the vent lines to a cargo oil tank.

(f) Safety devices in venting systems are to comply with the requirements of 2.4.3(c) of Part IX of the Rules.

(g) Provision is to be made to guard against liquid rising in the venting system to a height which would exceed the design head of cargo oil tanks. This is to be accomplished by high level alarms, overflow control systems, or other equivalent means, e.g. overfill alarms, together with independent gauging devices and cargo oil tank filling procedures. For the purpose of this regulation, spill valves are not considered equivalent to an overflow system.

(h) Opening for pressure release required by 5.9.1(b)(i) are to:

(i) have as great a height as is practicable above the cargo oil tank deck to obtain maximum dispersal of flammable vapours but in no case less than 2 m above the cargo oil tank deck, and

(ii) be arranged at the furthest distance practicable but not less than 5 m from the nearest air intakes and openings to enclosed spaces containing a source of ignition and from deck machinery and equipment which may constitute an ignition hazard. Anchor windlass and chain locker openings constitute an ignition hazard.

(i) Pressure/vacuum valves required 5.9.1(b)(i) may be provided with a by-pass arrangement when they are located in a vent main or masthead riser. Where such an arrangement is provided there are to be suitable indicators to show whether the by-pass is open or closed.

(j) Vent outlets for cargo loading, discharging and ballasting required by 5.9.1(b)(ii) are to:

(i) permit the free flow of vapour mixtures or alternatively, permit the throttling of the discharge of the vapour mixtures to achieve a velocity of not less than 30 m/sec;

(ii) be so arranged that the vapour mixture is discharged vertically upwards;

(iii) where the method is by free flow of vapour mixtures, be such that the outlet is to be not less than 6 m above the cargo tank deck or fore and aft gangway if situated within 4 m of the gangway and located not less than 10 m measured horizontally from the nearest air intakes and openings to enclosed spaces containing a source of ignition and from deck machinery and equipment which may constitute an ignition hazard;

(iv) where the method is by high velocity discharge, be located at a height not less than 2 m above the cargo tank deck and less than 10 m measured horizontally from the nearest air intakes and openings to enclosed spaces containing a source of ignition and from deck machinery and equipment which may constitute an ignition hazard. These outlet are to be provided with high velocity devices of an approved type;

(v) be designed on the basis of maximum designed loading rate multiplied by a factor of at least 1.25 to take account of gas evolution, in order to prevent the pressure in any cargo oil tank from exceeding the design pressure. The master is to be provided with information regarding the maximum permissible loading rate for each cargo oil tank and in the case of combined venting systems, for each group of cargo oil tanks;

(vi) anchor windlass and chain locker openings constitute ignition hazards. They are to be located at the distances required by 5.9.1(h)(ii), (j)(iii), (j)(iv); and

(vii) electrical equipment fitted in compliance with ICE 92-502 is not considered to be a source of ignition or ignition as mentioned in 5.9.1(j)(iii) and (iv).

(k) Pressure/vacuum valves are to be set a positive pressure of not more than 0.2 bar above atmospheric and a negative pressure of not more than 0.07 bar below atmospheric. Higher positive pressures not exceeding 0.7 bar gauge may be permitted in specially designed integral tanks.

(l) If cargo loading and ballasting or discharging of a cargo tank or cargo tank group is intended, which is isolated from a common venting system, that cargo tank or cargo tank group is to be fitted with a means for overpressure or underpressure protection as required in 5.9.1(b)(iii).

5.9.2 Cargo oil tank purging and/or gas-freeing

(a) Arrangements for purging and/or gas-freeing are to be such as to minimize the hazards due to the dispersal of flammable vapours in the atmosphere and to flammable mixtures in a cargo oil tank, thus the requirements of 5.9.2(b) to (d) are to be complied with, as applicable.

(b) When the ship is provided with an inert gas system the cargo oil tanks are first to be purged in accordance with the provisions of 5.8.7(b) until the concentration of hydrocarbon vapours in the cargo oil tanks has been reduced to less than 2% by volume. Thereafter gas freeing may take place at the cargo tank deck level.

(c) When the ship is not provided with an inert gas system, the operation is to be such that the flammable vapour is initially discharged through:

(i) the vent outlets as specified in 5.9.1(j);

(ii) outlets at least 2 m above the cargo oil tank level with a vertical efflux velocity of at least 30 m/sec. maintained during gas freeing operation; or

(iii) outlets at least 2 m above the cargo oil tank deck level with a vertical efflux velocity of at least 20 m/sec. and which are protected by suitable devices to prevent the passage of flame.

(d) The outlets referred to in (c) above are to be located not less than 10 m measured horizontally from the nearest air intakes and openings to enclosed spaces containing a source of ignition and from deck machinery, which may include anchor windlass and chain locker openings, and equipment which may constitute an ignition hazard.

(e) When the flammable vapour concentration at the outlet has been reduced to 30% of the lower flammable limit, gas-freeing may be continued at the cargo oil tank deck level.

5.9.3 Ventilation

(a) Cargo pump rooms are to be mechanically ventilated and discharges from exhaust fans are to be led to a safe place on the open deck. The ventilation of these rooms is to have sufficient capacity to minimize the possibility of accumulation of flammable vapours. The number of air changes per hour is to be at least 20, based upon the gross volume of the space. Air ducts are to be arranged so that all of the space is effectively ventilated. The ventilation is to be of the suction type using fans of the non-sparking type.

(b) The arrangement of ventilation inlets and outlets and other deckhouse and superstructure boundary space openings are to be such as to comply with the provisions of 5.9.1. Such vents especially for machinery spaces are to be situated as far aft as practicable. Due consideration in this regard is to be given when the ship is equipped to load or discharge at the stern. Sources of ignition such as electrical equipment are to be so arranged as to avoid an explosion hazard.

(c) In combination carriers all cargo spaces and any enclosed spaces adjacent to cargo spaces are to be capable of being mechanically ventilated. The mechanical ventilation may be provided by portable fans. An approved fixed gas warning system capable of monitoring flammable vapours is to be provided in cargo pump rooms, pipe ducts and cofferdams referred to in 2.4.1(d) of Part IX adjacent to slop tanks. Suitable arrangements are to be made to facilitate measurement of flammable vapours in all other spaces within the cargo area. Such measurements are to be made possible from open deck or easily accessible positions.

5.9.4 Venting, purging and gas measurement of double hull and double bottom spaces

(a) Double hull and double bottom spaces are to be fitted with suitable connections for the supply of air.

(b) On tankers required to be fitted inert gas systems:
   (i) double hull spaces are to be fitted with suitable connections for supply of inert gas;
   (ii) where such spaces are connected to a permanently fitted inert gas distribution system means are to be provided to prevent hydrocarbon gases from the cargo oil tanks entering the double hull spaces through the system;
   (iii) where such spaces are not permanently connected to a inert gas distribution system, appropriate means are to be provided to allow connection to the inert gas main.

(c) Suitable portable instruments for measuring oxygen and flammable vapour concentrations are to be provided. In selecting these instruments, due attention is to be given for their use in combination with the fixed gas sampling line systems referred to in 5.9.4(d).

(d) Where the atmosphere in double hull spaces cannot be reliably measured using flexible gas sampling hoses, such spaces are to be fitted permanent gas sampling lines. The configuration of gas sampling lines is to be adapted to the design of such spaces.

(e) The materials of construction and the dimensions of gas sampling lines are to be such as to prevent restriction. Where plastics materials are used, they are to be electrically conductive.

5.10 Cargo Oil Tank Level Gauging Equipment

5.10.1 General

Each cargo oil tank is to be fitted with suitable means for ascertaining the liquid level in the tank in accordance with the requirements of 5.10.2 and 5.10.3.

5.10.2 Restricted sounding device

(a) Sounding pipes or other approved devices, which may permit a limited amount of vapour to escape to atmosphere when being used, would be accepted for those tanks which are not required to be fitted with closed sounding devices, see 5.10.3. The devices are to be designed as to minimize the sudden release of vapour or liquid under pressure and the possibility of liquid spillage on deck. Means are also to be provided for relieving tank pressure before the device is operated.

(b) Separate ullage opening may be fitted as a reserve means for sounding cargo oil tanks.

(c) Arrangements which permit the escape of vapour to the atmosphere are not to be fitted in enclosed spaces.

5.10.3 Closed sounding devices

(a) In all tanks fitted with a fixed inert gas system, the cargo oil tanks are to be fitted sounding devices of an approved type, which do not permit the escape of cargo to the atmosphere when being used.

(b) Proposals to use indirect sounding or measuring devices which do not penetrate the tanks plating will be specially considered.

5.11 Cargo Heating Arrangements

5.11.1 General

Where heating systems are provided for the cargo oil tanks, the arrangements are to comply with the requirements of 5.11.2 to 5.11.5.

5.11.2 Blanking arrangements

Spectacle flanges of spool pieces are to be provided in the heating medium supply and return pipes to the cargo beating system, at a suitable position within the cargo area, so that lines can be blanked off in circumstances where the cargo does not require to be heated or where the heating coils have been removed from the tanks. Alternatively, blanking arrangements may be provided for each tank heating circuit.

5.11.3 Heating medium

(a) Where a combustible liquid is used as the heating medium it is to have a flash point of 60°C or above (closed cup test).

(b) In general, the temperature of the heating medium is not to exceed 220°C.

5.11.4 Heating circuits

(a) The heating medium supply and return lines are not to penetrate the cargo tank plating, other than at the top of the tank, and the main supply lines are to be run above the weather deck.

(b) Isolating shut-off valves or cocks are to be provided at the inlet and outlet connections to the heating circuit(s) of each tank, and means are to be provided for regulating the flow.

(c) Where steam or water is employed in the heating circuits, the returns are to be led to an observation tank which is to be in a well ventilated and well lighted part of the machinery space remote from the boilers.

(d) Where a thermal oil is employed in the heating circuits, the arrangements will be specially considered but, in any case, they are to be such that contamination of the thermal oil with cargo liquid cannot take place under normal operating conditions. In general, the arrangements are, at least, to comply with, in so far as they are applicable.

(e) In any heating system, a higher pressure is to be maintained within the heating circuit than the maximum pressure head which can be exerted by the contents of the cargo oil tank on the circuit. Alternatively, when the heating circuit is not in use, it may be drained and blanked.

5.11.5 Temperature indication

Means are to be provided for measuring the cargo temperature. Where overheating could result in a dangerous condition, an alarm system which monitors the cargo temperature is to be provided.

5.12 Installaiton and Tests

5.12.1 The inert gas system, including alarms and safety devices, is to be installed on board and tested under working conditions to the satisfaction of the Surveyors.

5.12.2 Cargo oil pipes, after the completion of their piping, are to be subjected to a leak test at a pressure of 1.25 times the design pressure or greater.

5.12.3 Heating pipes inside cargo oil tanks are to be subjected to a leak test at a pressure of 1.5 times the design pressure or greater.

5.12.4 After installation inboard, auxiliaries and piping systems are to be subjected to the following tests:

(a) A test on the functioning of cargo oil pumps.

(b) A test on the functioning of ventilating system.

(c) An airtight test of inert gas systems.

(d) A test on the functioning of various systems concerning safety measures specified in this chapter.

Chapter 6

Equipment and Arrangement for Oil Pollution Prevention

6.1 General

The requirement in this chapter apply to the construction and equipment for the prevention of pollution by oil or oily mixtures produced from the machinery space of all ship.

6.1.1 Oil record book

Every oil tanker of 150 gross tonnage and above and every ship of 400 gross tonnage and above other than an oil tanker are to be provided with an oil record book to record relevant issues including any of the following operations.

(a) Machinery space operations
- (i) Ballasting or cleaning of oil fuel tanks
- (ii) Discharging of dirty ballast or cleaning water from oil fuel tanks
- (iii) Collection and disposal of oil residues (sludge)
- (iv) Discharge overboard or disposal otherwise of oily bilge water which has accumulated in machinery spaces
- (v) Bunkering of fuel or bulk lubricating oil

6.2 Storage and Discharge of Oily Residues (Sludge), Bilge Water Holding Tanks

6.2.1 Capacity of sludge tanks

(a) Every ship of 400 gross tonnage and over is to be provided with a tank or tanks of adequate capacity to receive the sludge produced by the purification of fuel oil and lubricating oil, and leaked and drained oil in the machinery space. The capacity of such a tank or tanks is to be greater than the sum of the minimum capacities of individual tanks specified in the following (i) or (ii).

(i) The minimum sludge tank capacity V_1 for ships not carrying ballast water in fuel oil tanks:

$$V_1 = K_1CD \quad (m^3)$$

where:

K_1 = 0.015, heavy fuel oil which is purified before being used by main engine.
0.005, marine diesel oil or heavy fuel oil but not requiring purification.

C = Fuel oil consumption (m^3/day).

D = Maximum number of days between ports where oil sludge can be discharged ashore (when no detailed data is available, this is to be made greater than 30 days).

(ii) The minimum capacity V_2 of the tank in ships where ballast water is carried in fuel oil tanks:

$$V_2 = V_1 + K_2B \quad (m^3)$$

where:

V_1 = Tank capacity determined by (i) above.

K_2 = 0.01 when ballast water is carried in heavy fuel oil tanks;

K_2 = 0.005 when ballast water is carried in marine diesel oil tanks.

B = Capacity (t) of fuel oil tanks connected to the ballast pipelines.

(b) Notwithstanding the requirements in the preceding 6.2.1(a), in ships listed below where all oily bilge water is exclusively discharged to reception facilities, sludge tanks may be replaced with bilge storage arrangements:

(i) Ships engaged exclusively in voyages in special areas

(ii) Ships exclusively engaged in voyages in sea areas within 12 nautical miles from the territorial base line of any state.

(iii) Ships not provided with a propulsion engine, which are approved to be appropriate by the Society.

6.2.2 Construction of sludge tanks and piping arrangements.

The construction and piping arrangements of sludge tanks required under the requirements of the preceding 6.2.1 are to meet the following requirements (a) to (e):

(a) Manholes or access holes in a sufficient size are to be provided at such locations that each part of the tank can be cleaned without difficulties.

(b) Appropriate means to facilitate drawing and discharge of oil residues are to be provided.

(c) Except for the standard discharge connections specified in 6.2.4 of this Part, no direct overboard discharge connections are to be provided.

(d) Except for the following cases, the tank discharge pipeline and bilge pipeline are not to be connected each other.

(i) A common pipeline with the standard discharge connections specified in 6.2.4.

(ii) Pipeline for discharging the water which has been settled from the tank. However, this is limited to cases in which discharge is done through manually operated automatic closing valve or equivalent closing appliances.

(e) Pumps meeting the following requirements are to be provided for discharging oil residues from the tank:

(i) Not to serve in common with the oily bilge pump.

(ii) The pump is to be of the suitable type for discharging sludge ashore.

(iii) The pumping rate is to be the following Q or greater.

$$Q = V/t \quad (m^3/h)$$

where:

V = V_1 or V_2 specified in 6.2.1(a).

t = 8 hours.

Notwithstanding this requirement, for ships not engaged in international voyages, the pump rate may be $0.5m^3/h$.

6.2.3 Bilge water holding tanks, if fitted

The minimum required capacity (C) of bilge water holding tanks are recommended as follows: (not compulsory)

(a) Capacity of bilge water holding tank (C)(m^3) is to be the value obtained by the following formula or more. Ships of gross tonnage less than 400 and oil tankers of gross tonnage less than 150 may be exempted from these requirements. In addition, for ships adopting a system where special consideration is given regarding the handling of oily bilge water, the capacity of oily bilge water holding tanks may be reduced.

(i) Ships whose maximum continuous output of main engine is less than 1,000 kW

$$C = 4.0 \quad (m^3)$$

(ii) Ships whose maximum continuous output of main engine is 1,000 kW or more but less than 20,000 kW

$$C = P/250 \quad (m^3)$$

where:

P = Maximum continuous output of main engine (kW).

(iii) Ships whose maximum continuous output of main engine is 20,000 kW or more

$C = 40+P/500 \quad (m^3)$

where:

P = Maximum continuous output of main engine (kW).

(b) Bilge water holding tanks are to be provided with a device capable of measuring the quantity of bilge.

(c) It is to be ensured that no leakage of bilge occurs even when the ship pitches through 10 degrees and rolling by 22.5 degrees either side.

(d) The arrangement is to be such that it is capable of transferring bilge to both the bilge water holding tank and shore reception facilities. In this case, it is to be provided with a standard discharge connection specified in Table VI 6-1 in 6.2.4.

6.2.4 Standard discharge connection

To enable pipes of reception facilities to be connected with the ship's discharge pipeline of the sludge tank provided under the requirements of the preceding 6.2.2, a standard discharge connection in accordance with Table VI 6-1 is to be provided.

6.3 Oil Filtering Equipment

6.3.1 An oil filtering system is to meet either of the following requirements (a), (b) or (c) according to the type and size of ship, and trade area:

(a) It is to be of a design approved by the Recognized Authority and to be such as will ensure that any oily mixture discharged into the sea passing through the oil filtering system is to have an oil content of not more than 15 ppm.

(b) It is to be satisfied with the requirements in (a) and to be fitted with an approved type of audible and visible alarm devices which automatically operates when the oil content in the effluent exceed 15 ppm, and which also automatically operate when defects or failures of the measuring function occur.

(c) It is to be satisfied with the requirements in (b) and to be provided with an automatically discharge stopping of the device such as will ensure automatic stopping of the system when the oil content in the effluent exceed 15 ppm.

6.4 Requirements for Installation

6.4.1 General

For all oil tankers and ships of 100 gross tonnage and over other than oil tankers, oil filtering system are to be provided for discharging oil bilge water from the machinery space or other oil in accordance with Table VI 6-2.

6.4.2 Modifications

(a) Except ships exclusively engaged in voyages in special area, for 4,000 gross tonnage and above other than oil tankers and oil tankers of 150 gross tonnage and above, the equipment required according in the column for ships of 10,000 gross tonnage and above are to be provided for discharging dirty ballast water carried in the fuel tanks in accordance with Table VI 6-2 into the sea.

(b) Notwithstanding the requirements in the preceding 6.4.1, for ships listed below where all of the oily bilge is intended to be discharged exclusively to reception facilities, oily-water separating equipment, may be substituted with bilge water holding tanks.

(i) Ships exclusively engaged in voyages in special area.

(ii) Ships with gross tonnage of less than 400 tons and exclusively engaged in voyages within 12 nautical miles from the territorial base line of any state.

(iii) Ships not provided with a propulsion engine, and considered to be appropriate by the Society.

(iv) Ships subject to the Rules for High Speed Crafts engaged on a scheduled service with a turn-around time not exceeding 24 hours and covering also non-passenger/cargo-carrying relocation voyages for these ships.

(v) Ships, such as hotel ships, storage vessels, etc., which are stationary except for non-cargo-carrying relocation voyages.

6.5 Fuel and Lubricating Oil Tanks Protection

6.5.1 The requirements in this section apply to vessels having an aggregate fuel oil capacity of 600 m^3 and above. However, the requirements need not be applied to individual fuel oil tanks with a capacity not greater than 30 m^3, provided that the aggregate capacity of such excluded tanks is not greater than 600 m^3. Further, individual fuel oil tanks are not to have capacity greater than 2,500 m^3. Fuel oil tanks of any volume are not to be used for ballast water.

6.5.2 The protective locations for the tanks specified in 6.5.1 are to be as follows:

(a) Deterministic Approach

All applicable tanks are to be located away from the vessel's bottom or side shell plating for a distance as specified in (i), (ii) or (iii). Small suction wells may extend below fuel oil tanks bottoms, if they are as small as possible and the distance between the vessel's bottom plate and the suction well bottom is not reduced by more than half of the distance required by (i).

(i) For vessels having an aggregate oil fuel capacity of 600 m^3 and above, all tanks are to be arranged above vessel's molded line of bottom shell plating at least of the distance h as specified below:

$h = B/20$ m or
$h = 2.0$ m , whichever is smaller

where:

B is the breadth of the vessel, as defined in 1.2.2 of Part II, in m.
h is in no case to be less than 0.76 m.

(ii) For vessels having an aggregate oil fuel capacity greater than or equal to 600 m^3 but less than 5000 m^3, tanks are to be arranged inboard of the molded line of side plating not less than the distance w as specified below:

$w = 0.4 + 2.4C/20000$ m

where:

C = vessel's total volume of oil fuel in m^3 at 98% tank filling.
w = at least 1.0 m, for individual tanks smaller than 500 m^3 w is to be at least 0.76 m.

(iii) For vessels having an aggregate oil fuel capacity of 5000 m^3 and above, tanks are to be arranged inboard of the molded line of side plating not less than the distance w as specified below:

$w = 0.5 + C/20000$ m or
$w = 2.0$ m, whichever is smaller

where C is the vessel's total volume of oil fuel in m^3 at 98% tank filling. The minimum value of w is 1.0 m.

(b) Probabilistic Approach

As an alternative to the deterministic approach of 6.5.2(a), arrangements complying with the accidental oil fuel outflow performance standard of Regulation 12A, Annex I, MARPOL 73/78, as amended, would be acceptable.

6.5.3 Class notation **POT**

In addition to the requirements for fuel oil tank protection as specified in 6.5.1 utilizing the deterministic approach of 6.5.2(a), where lubricating oil tanks are also arranged in the same manner as required by the deterministic approach 6.5.2(a) for fuel oil tanks, vessels are to be eligible for the optional Class notation, **POT** – Protection of Fuel and Lubricating Oil Tanks. Further, the following exemptions are applicable to lubrication oil tanks:

(a) In application of equation in 6.5.2(a)(ii) or (iii), total volume of lubricating oil tanks need not be accounted for C (vessel's total volume of oil in m^3 at 98% tank filling).

(b) Tanks used as main engine lubricating oil drain tanks need not be located in a protected location away from the vessel's side or bottom plate.

6.6 STS Operation Plan

6.6.1 For oil tankers of 150 gross tonnage and above engaged in the transfer of oil cargo between oil tankers at sea(Ship-to-Ship, STS operations), a STS Operation Plan approved by the Society is to be provided on board. The plan is to be written in the working language of the master and officers of the ship. If the language used in the plan is not English, an English translation is to accompany it.

6.6.2 Transfer operations of oil cargo are to be recorded in the Oil Record Book or other Record Book which is considered appropriate by the Society. The record is to be provided on board for at least 3 years.

6.6.3 The STS Operations Plan is to be prepared taking into account the following guidelines:

(a) IMO's "Manual on Oil Pollution, Section I, Prevention", and

(b) CDI/ICS/OCIMF/SIGTTO "Ship-to-ship Transfer Guide for Petroleum, Chemicals, and Liquefied Gases", first edition 2013.

Table VI 6-1
Standard Dimensions of Flanges for Discharge Connections

Description	Dimension
Outside diameter	215 mm
Inner diameter	A diameter reasonably corresponding to the outside diameter
Pitchcircle diameter	183 mm
Flange groove	Six 22 mm-dia holes are to be drilled on the above pitchcircle dia at equal angular intervals, and grooves of 22 mm wide from these holes reaching the outer periphery of the flange are to be machined.
Thickness of flange	20 mm
Number and diameter of bolts and nuts with a proper length	6 sets of 20 mm dia.
The flange is designed to accept pipes up to a maximum internal diameter of 125 mm and is to be of steel or equivalent material with plain surfaces. This flange is to withstand a service pressure of 0.6 MPa when an oil-resistant gasket is inserted.	

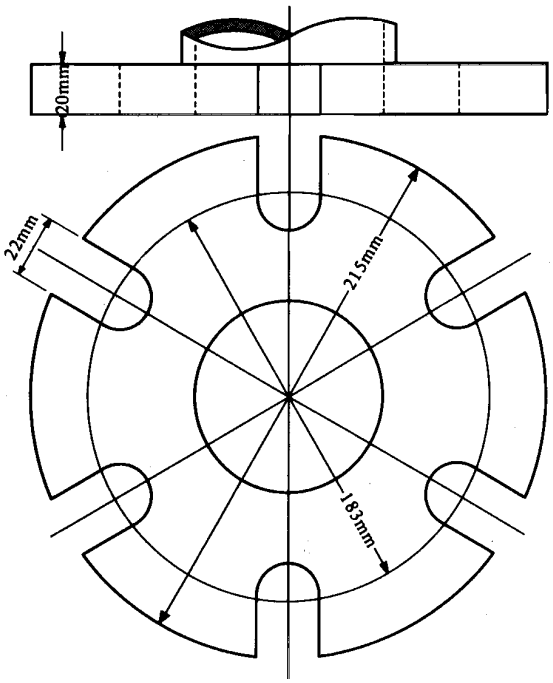

Table VI 6-2
Installation Requirements for Oil Filtering System

Trade area and type of ship↓ / Gross tonnage→		GT<100	100≤ GT <400	400≤ GT<10,000	10,000≤GT
Ships exclusively engaged in voyages in special area	Oil tankers	(II)			
	Ships other than oil tankers	–	(I)*		
Ships other than above	Oil tanks	(II)			
	Ships other than oil tankers	–	(I)		

Remarks: Symbols in the table signify the following equipment:

(I) Oil filtering system specified in 6.3.1(a).

(II) Oil filtering system specified in 6.3.1(c).

* For ships exclusively engaged in voyages in Antarctic area.

Chapter 6A

Equipment for Sewage Pollution Prevention

6A.1 General

6A.1.1 Application

The requirements in this chapter apply to the equipment for the prevention of pollution by sewage from ships.

6A.1.2 Definition (Regulation 1 of MARPOL Annex IV)

For the purpose of the requirements in this chapter, the following definitions apply:

(a) New ship means a ship:
  (i) for which the building contract is placed, or, in the absence of a building contract, is constructed on or after 27 September 2003; or
  (ii) the delivery of which is on or after 27 September 2006.

(b) Existing ship means a ship which is not a new ship.

(c) Sewage means:
  (i) drainage and other wastes from any form of toilets and urinals;
  (ii) drainage from medical premises (dispensary, sick bay, etc.) via wash basins, wash tubs and scuppers located in such premises;
  (iii) drainage from spaces containing living animals; or
  (iv) other waste waters when mixed with the drainage defined above.

(d) Holding tank means a tank used for the collection and storage of sewage.

(e) From the nearest land means from the baseline from which the territorial sea of the territory in question is established in accordance with international law, except the case off the north-eastern coast of Australia specified in Regulation 1.5 of Annex IV.

6A.2 Equipment for Sewage Pollution Prevention

6A.2.1 Application (Regulation 2 of MARPOL Annex IV)

(a) The requirements of this chapter apply to the following ships engaged in international voyages:
  (i) new ships of 400 gross tonnage and above;
  (ii) new ships of less than 400 gross tonnage which are certified to carry more than 15 persons; and
  (iii) existing ships of 400 gross tonnage and above, on 27 September 2008; and
  (iv) existing ships of less than 400 gross tonnage which are certified to carry more than 15 persons, on 27 September 2008; and

(b) Existing ships, according to (a)(iii) and (iv) above, the keels of which are laid or which are of a similar stage of construction before 2 October 1983 are to be equipped, as far as practicable, to discharge sewage in accordance with the requirements of 6A.2.2.

6A.2.2 Requirements for installation of equipment (Regulation 9, Regulation 10 and Regulation 11 of MARPOL Annex IV)

For ships specified in 6A.2.1(a), the following equipments for the prevention of pollution by sewage are to be installed.

(a) one of the following sewage systems
  (i) a sewage treatment plant as deemed appropriate by the Society

(ii) a sewage comminuting and disinfecting system as deemed appropriate by the Society, accompanied with facilities to the satisfaction to the Society for the temporary storage of sewage when the ship is less than 3 nautical miles from the nearest land, or

(iii) a holding tank of the capacity to the satisfaction of the Society for the retention of all sewage, having regard to the operation of the ship, the number of persons on board and other relevant factors. The holding tank is to be constructed to the satisfaction of the Society and to have a means to indicate visually the amount of its contents.

(b) a pipeline to discharge sewage to a reception facility.

(c) a standard discharge connection fitted for the pipeline specified in (b) above in accordance with Table VI 6A-1. For ships in dedicated trades, i.e. passenger ferries, alternatively the ship's discharge pipeline may be fitted with a discharge connection which can be accepted by the Administration, such as quick-connection couplings.

Table VI 6A-1
Standard Dimensions of Flanges for Discharge Connections

Description	Dimension
Outside diameter	210 mm
Inner diameter	According to pipe outside diameter(1)
Bolt circle diameter	170 mm
Slots in flange	4 holes 18 mm in diameter equidistantly placed on a bolt circle of the above diameter slotted to the flange periphery. The slot width to be 18 mm.
Flange thickness	16 mm
Bolts and nuts: quantity and diameter	4, each of 16 mm in diameter and of suitable length
The flange is designed to accept pipes up to a maximum internal diameter of 100 mm and is to be of steel or other equivalent material having a flat face. This flange, together with a suitable gasket, is to be suitable for a service pressure of 0.6 MPa.	

Note:

(1) For ships having a moulded depth of 5 m and less, the inner diameter of the discharge connection may be 38 mm.

Chapter 7

Tests and Inspections

7.1 Tests and Inspections before Installation on Board

7.1.1 Materials used for all Class-I and -II pipes, valves, and fittings are to be tested and inspected in the presence of the Surveyor as specified in 2.3.2 and 2.3.3 of this Part.

7.1.2 Hydrostatic tests

(a) All Class-I and -II pipes and integral fittings and, in all cases, all steam pipes, feed pipes, compressed air pipes and fuel pipes having a design pressure greater than 0.35 MPa and relative integral fittings, after completion of manufacture and before installation and coating, if any, are to be subject to a hydrostatic test in the presence of the Surveyor at the following value of pressure:

$P_H = 1.5\ P$

where:

P_H = Test pressure MPa.
P = Design pressure MPa.

(b) For steel pipes and integral fittings for the design temperature exceeds 300°C, the test pressure is to be determined by the following formula but it is not necessary that it exceeds 2P:

$$P_H = 1.5\frac{k_{100}}{k_T} \cdot P$$

where:

k_{100} = Permissible stress at 100°C.
k_T = Permissible stress at the design temperature.
The value of the test pressure may be reduced, with the approval of the Society, to 1.5P in order to avoid excessive stress in way of bends, T-pieces, etc.

(c) In no case is the membrane stress to exceed 90% of the yield stress at the testing temperature.

(d) The pressure parts of auxiliaries (excluding auxiliary machinery for specific use etc.) are to be subjected to hydrostatic tests at a pressure equal to 1.5P or 0.2 MPa, whichever is greater.

7.1.3 For examination of pipe welding, see Part XII 5.8.

7.1.4 When, for technical reasons, it is not possible to carry out complete hydrotesting before assembly on board, for all sections of piping, proposals are to be submitted for approval to the Society for testing the closing lengths of piping, particularly in respect to the closing seams.

7.1.5 When the hydrostatic test of piping is carried out on board, these tests may be carried out in conjunction with the test required under 7.2.

7.1.6 Pressure testing of small-bore pipes (less than about 15 mm) may be waived at the discretion of the Society depending on the application.

7.1.7 Additional requirements for hydraulic system

The following inspections are to be carried out to the satisfaction of the Surveyors at shop:

(a) examination of safety valve, relief valves, etc.;

(b) examination of adjusting valves, such as speed control valves; and

(c) proper functioning of equipment, such as control system, safety devices, monitoring system, and shutdowns, including the requirements of 4.5.5(g)(ii) as deemed appropriate by the Society.

7.2 Tests and Inspections after Assembly on Board

All pipe systems after installation on board, the following tightness tests are to be carried out in the presence of the Surveyor.

7.2.1 In general, all the piping system covered by these requirements are to be checked for leakage under operational conditions and, if necessary, using special techniques other than hydrostatic testing.

7.2.2 Thermal oil piping system, heating coils in tanks and liquid or gas fuel lines are to be tested to not less than 1.5P but in no case less than 0.4 MPa.

7.2.3 Plastic piping systems

(a) Plastic piping systems for essential services are to be subjected to a test pressure not less than 1.5P or 0.4 MPa whichever is greater.

(b) Plastic piping systems for non-essential services are to be checked for leakage under operational conditions.

(c) For piping required to be electrically conductive, earthing is to be checked, and random resistance testing is to be conducted.

7.2.4 Additional requirements for hydraulic system

The following inspections are to be carried out to the satisfaction of the Surveyors:

(a) location of hydraulic system and countermeasures against leakage are to be checked in accordance with 4.5.1(h);

(b) running test, including control system, safety devices, monitoring system, shutdowns and the requirements of 4.5.5(g)(ii); and

(c) relevant electrical tests or inspections in accordance with Part VII of the Rules.

7.3 Hydrostatic Tests of Valves and Fittings

7.3.1 Valves and fittings non-integral with the piping system, intended for Class I and II, are to be tested in accordance with recognized standards, but to not less than 1.5 times the design pressure.

7.3.2 Valves and distance pieces fitted to the ship's side below the load line are to be subjected to hydrostatic tests at a pressure of 1.5P or 0.5 MPa, whichever is greater.

Tel: *+886 2 25062711*
Fax: *+886 2 25074722*
E-mail: *cr.tp@crclass.org*
Website: *http://www.crclass.org*
© CR – All rights reserved

財團法人驗船中心
CR CLASSIFICATION SOCIETY

RULES FOR THE CONSTRUCTION AND CLASSIFICATION OF STEEL SHIPS 2022

PART VII – ELECTRICAL INSTALLATIONS

July 2022

財團法人驗船中心
CR CLASSIFICATION SOCIETY

RULES FOR THE CONSTRUCTION AND CLASSIFICATION OF STEEL SHIPS 2022

PART VII – ELECTRICAL INSTALLATIONS

July 2022

RULES FOR THE CONSTRUCTION AND CLASSIFICATION OF STEEL SHIPS

PART I	CLASSIFICATION AND SURVEY
PART II	HULL CONSTRUCTION AND EQUIPMENT
PART III	SPECIAL SERVICE AND TYPE OF SHIPS
PART IV	MACHINERY INSTALLATIONS – CONSTRUCTION AND SHAFTING
PART V	BOILERS, PRESSURE VESSELS, THERMAL OIL HEATERS AND INCINERATORS
PART VI	PIPING AND PUMPING SYSTEMS
PART VII	ELECTRICAL INSTALLATIONS
PART VIII	AUTOMATIC OR REMOTE CONTROL AND MONITORING SYSTEMS
PART IX	FIRE PROTECTION, DETECTION AND EXTINCTION
PART X	REFRIGERATED CARGO INSTALLATIONS
PART XI	MATERIALS
PART XII	WELDING
PART XIII	NAVIGATIONAL SAFETY SYSTEMS
PART XIV	GOAL-BASED SHIP CONSTRUCTION STANDARDS SHIPS
PART XV	HULL CONSTRUCTION AND EQUIPMENT FOR SHIPS LESS THAN 90 M IN LENGTH

List of major changes in Part VII from 2019 edition

1.2.1	Amend No.1
1.2.2(b)(i) & (ii)	Amend No.1
1.2.2(c)(i) & (ii)	Amend No.1
1.6.6	Amend No.1
1.6.6~1.6.12	Amend No.1
1.10.5~1.10.7	Amend No.1
1.12	Amend No.1
2.1.7	Amend No.1
2.2.5.	Amend No.1
2.2.7(f), (g)	Amend No.1
2.5.12~2.5.14	Amend No.1
3.3.8	Amend No.1
3.6.2	Amend No.1
3.8.6(a), (b)	Amend No.1
4.1.1	Amend No.1
4.1.4	Amend No.1
4.1.5 & 4.1.6	Amend No.1
4.2.4(a), (e)	Amend No.1
5.1.6	Amend No.1
5.2	Amend No.1
9.3	Amend No.1
9.3, 9.4	Amend No.1
10.1.1.(e)	Amend No.1
10.3.4	Amend No.1
10.3.5	Amend No.1
10.5	Amend No.1
1.2.1(c)	Amend No.2
2.5.12	Amend No.2
4.1.5 & 4.1.6	Amend No.2
6.1.15	Amend No.2
7.2.1 & 7.2.3	Amend No.2
7.3.2	Amend No.2
11.4.5(g)	Amend No.2
13.1.3	Amend No.2
13.1.8	Amend No.2
14.4.1	Amend No.2
14.6.1	Amend No.2
16.3.2	Amend No.2

Acronyms

AIS	Automatic Identification System
ANTS	Automatic Navigation and Track-keeping System
ARPA	Automatic Radar Plotting Aid
BC Code	Code of Safe Practice for Solid Bulk Cargoes
BNWAS	Bridge Navigational Watch Alarm System
CA	Controlled Atmosphere
CDI	Chemical Distribution Institute
COW	Crude Oil Washing
CPA	Closest Point of Approach
CPP	Controllable Pitch Propeller
CSC	International Convention for Safe Containers
CSR	Common Structural Rules
CTOD	Crack Tip Opening Displacement
ECDIS	Electronic Chart Display and Information System
EEBD	Emergency Escape Breathing Devices
ENC	Electronic Navigational Chart
ESP	Enhance Survey Plan
ETA	Emergency Towing Arrangement
FEU	Forty-foot Equivalent Unit
FMEA	Failure Mode & Effect Analysis
FRP, GRP	Fibreglass Reinforced Plastics
FTP Code	International Code for Application of Fire Test Procedures
GBS	Goal-Based ship construction Standards
GDC	General Dry Cargo
GLONASS	Global Navigation Satellite System
GMDSS	Global Maritime Distress and Safety System
GPS	Global Positioning System
HAZ	Heat Affected Zone
HHP anchor	High Holding Power anchor
HSC	High Speed Craft
HTS	High Tensile Steel
IACS	International Association of Classification Societies
IBC Code	International Code for the Construction and Equipment of Ships Carrying Dangerous Chemicals in Bulk

ICS	The International Chamber of Shipping
IEC	International Electrotechnical Commission
IGC Code	International Code for the Construction and Equipment of Ships Carrying Liquefied Gases in Bulk
ILO	International Labour Organization
IMDG Code	International Maritime Dangerous Goods Code
IMO	International Maritime Organization
ISO	International Standards Organization
LAN	Local Area Network
LCS	Loading Computer System
LEL	Lower Explosive Limit
LRIT	Long-range Identification and Tracking of ships
MARPOL	International Convention for the Prevention of Pollution from Ships
MARVS	Maximum Allowable Relief Valve Setting
MEPC	Marine Environment Protection Committee
MLC	Maritime Labour Convention
MSC	Maritime Safety Committee
NDT	Nondestructive Testing
OCIMF	The Oil Companies International Marine Forum
OOW	Officer Of the Watch
PA	Public Address
PMA	Permanent Means of Access
PMS	Planned Machinery Maintenance Scheme
RH	Relative Humidity
PSPC	Performance Standard for Protective Coating
SENC	System Electronic Navigational Chart
SHHP anchor	Super High Holding Power anchor
SOLAS	International Convention for the Safety of Life at Sea
SRE	Ship Recycling
STCW	International Convention on Standards of Training, Certification and Watch-keeping for Seafarers
STS operation	Ship-To-Ship operation
S-VDR	Simplified Voyage Data Recorder
TCPA	Time to CPA
TEU	Twenty-foot Equivalent Unit
THD	Total Harmonic Distortion

TMCP	Thermo-Mechanical Controlled Processing
UPS	Uninterruptible Power Supply
VDR	Voyage Data Recorder
VEC	Vapor Emission Control

RULES FOR THE CONSTRUCTION AND CLASSIFICATION OF STEEL SHIPS

PART VII
ELECTRICAL INSTALLATIONS

CONTENTS

Chapter 1 General 1

1.1 General 1
1.2 Drawings and Data 1
1.3 Ambient Reference Conditions 2
1.4 Inclination of Ship 2
1.5 Quality of Electrical Power Supplies 3
1.6 Location and Construction 4
1.7 Earthing 5
1.8 Bonding for the Control of Static Electricity 6
1.9 Clearances and Creepage Distances 6
1.10 Electrical Equipment for Use in Explosive Gas Atmospheres 7
1.11 Protection of Electrical Enclosures 9
1.12 Testing and Inspection 11

Chapter 2 System Design of Distribution and Circuit Protection 12

2.1 System Design - General 12
2.2 System Design - Protection 15
2.3 Electric Power and Control Circuits for Steering Gear 19
2.4 Navigation Lights 21
2.5 Internal Communication 21

Chapter 3 Generators 24

3.1 General 24
3.2 Prime Movers 24
3.3 Generator Construction 24
3.4 Direct Current Service Generators 25
3.5 Alternating Current Service Generators 26
3.6 Exciters 27
3.7 Short Circuit Conditions 27
3.8 Testing and Inspection 27

Chapter 4 Motors 32

4.1 General 32

4.2 Testing and Inspection 32

Chapter 5 Switchboards and Mounted Equipment 34

5.1 General 34
5.2 Construction 34
5.3 Bus Bars 35
5.4 Switchboard Wiring and Circuit Arrangement 35
5.5 Circuit-Breakers and Electromagnetic Contactors 36
5.6 Fuses 37
5.7 Instruments 37
5.8 Testing and Inspection 38

Chapter 6 Batteries 40

6.1 General Construction and Arrangement 40
6.2 Battery Charging and Discharging Facilities 41
6.3 Testing and Inspection 41

Chapter 7 Transformers 43

7.1 General 43
7.2 Construction 43
7.3 Voltage Regulation 43
7.4 Testing and Inspection 43

Chapter 8 Cables 46

8.1 General 46
8.2 Cable Applications 46
8.3 Current Rating of Cables 46
8.4 Installation of Cables 47
8.5 Precaution against Fire 48
8.6 Cables in Hazardous Areas 49
8.7 Mechanical Protection of Cables 49
8.8 Installation of Cables in Pipes and Conduits 49
8.9 Penetration through Bulkheads and Decks 50
8.10 Earthing and Securing of Cables 50
8.11 Cables in Refrigerated Spaces 50
8.12 Cables for Alternating Current 51
8.13 Joints and Branches 51
8.14 Tests and Inspections 52
8.15 Type Tests 52

Chapter 9 Motor Controllers 57

9.1 Construction 57
9.2 Control and Protection of Motors 57
9.3 Magnetic Brakes 58
9.4 Temperature Rise 58
9.5 Tests 59

Chapter 10 Accessories and Lighting Equipment 61

10.1 General 61
10.2 Accessories 61
10.3 Lighting Fittings 61
10.4 Fluorescent Lamps 62

Chapter 11 Main Source and Emergency Source of Electrical Power 63

11.1 General 63
11.2 Main Source of Electrical Power and Lighting Systems 63
11.3 Emergency Source of Electrical Power in Passenger Ships 64
11.4 Emergency Source of Electrical Power in Cargo Ships 67
11.5 Starting Arrangements for Emergency Generating Sets 70
11.6 Use of Emergency Generator in Port 70
11.7 Radio Installation 71
11.8 Ships of Less than 500 GT 72
11.9 Ships on Short Duration Voyages 72

Chapter 12 Special Requirements for Ships Intended for the Carriage in Bulk of Oil, Liquefied Gases and Other Hazardous Cargoes 73

12.1 General 73
12.2 Systems of Supply 73
12.3 Cables and Cable Installation 73
12.4 Control Circuits 74
12.5 Transmitting Aerials 74
12.6 Dangerous Zones and Spaces 74
12.7 Semi-enclosed Spaces 74
12.8 Additional Requirements for Oil Tankers Intended for the Carriage in Bulk of Oil Cargoes having a Flash Point not Exceeding 60°C (Closed Cup Test) 74
12.9 Additional Requirements for Ships for the Carriage of Liquefied Gases in Bulk 76
12.10 Additional Requirements for Ships for the Carriage of Dangerous Chemicals in Bulk 76
12.11 Additional Requirements for Ships for the Carriage of Coal in Bulk 77
12.12 Additional Requirements for Ships for the Carriage of Motor Vehicles with Fuel in Their Tanks for Their Own Propulsion 77
12.13 Additional Requirements for Ships for the Carriage of Dangerous Goods 78

Chapter 13 Additional Requirements for Electric Propulsion Equipment 79

13.1 General 79
13.2 Power Requirements 79
13.3 Propulsion Control 80
13.4 Protection of Propulsion System 80
13.5 Instruments 81

Chapter 14 High Voltage Installations with Voltages above 1 kV up to 15 kV 82

14.1 General 82
14.2 System Design 82
14.3 Rotating Machinery 84
14.4 Power Transformers 84
14.5 Cables 85
14.6 Switchgear and Controlgear Assemblies 85

14.7 Installation 86

Chapter 15 Semiconductor Equipment 88

15.1 General 88
15.2 Tests 89

Chapter 16 Tests after Installation on Board 90

16.1 General 90
16.2 Insulation Tests 90
16.3 Performance Tests 90

Chapter 17 Spare Parts 91

17.1 Spare Parts 91
17.2 Testing Instruments 91
17.3 Storage and Packing 91

Chapter 18 Uninterruptible Power System 94

18.1 General 94
18.2 Testing and Inspection 94

Chapter 1
General

1.1 General

1.1.1 The requirements of the present Part are applicable to the electrical installation intended for ships without special service limitations or restrictions. The Society may, however, modify the requirements in certain particular cases for their application to small ships, fishing vessels and ships with service limitations or restrictions.

1.1.2 The Society is prepared to give special consideration to the novel features of design in respect of the electrical installation based on the best information available at the time.

1.1.3 The electrical apparatus and the wiring system of a classed ship are to be constructed, installed and tested under the supervision and to the satisfaction of the Surveyor in accordance with the following requirements. Considerations will be given, however, to the arrangements or details of the equipment and machinery which comply with other recognized standards provided they are not less effective than the requirements of this Part.

1.1.4 When applying the requirements of the following Chapters, the so-called essential auxiliaries are to be as specified in Chapter 1 of Part IV.

1.1.5 Passenger ships intended for classification are to be constructed in accordance with the requirements of the Society as well as those of Governmental and International Convention Regulations.

1.2 Drawings and Data

1.2.1 The shipbuilder or manufacturer is to submit the following drawings and data for approval before the work commences:

(a) For propulsion machineries, generators and essential motors of 375 kW and over:
Complete rating, seating arrangements, assembly, shaft, stator and rotor details, electric propulsion coupling details, mass, main dimensions, main materials used, and data for calculation of critical speed.

(b) For generators below 375 kW:
Complete rating, seating arrangements, type of enclosure and dimensional outline.

(c) For essential motors of 75 kW and above but below 375 kW:
Complete rating, seating arrangements, type of enclosure and dimensional outline.

(d) For switchboards:
Arrangements and details, front view, installation arrangements and wiring diagram.

(e) For wiring:
All wiring plans and circuit diagrams including load distribution, wire size, type of cable, maximum temperature rise of conductor and voltage drop, type of insulation, rating or setting of circuit breaker, rating of fuse and switch, and interrupting capacity of circuit breaker and fuse.

(f) For arrangement:
General arrangement of electric equipment including details of the main cable runs.

1.2.2 The shipbuilder is to submit the following specification and data for approval before the work commences:

(a) Specifications and list of electrical equipment.

(b) Load analysis and protective device coordination study.
(i) This protective device coordination study is to be an organized time-current study of all protective devices, taken in series, from the utilization equipment to the source, under various conditions of short circuit. The time-current study is to indicate settings of long-time delay tripping, short-time delay tripping, and instantaneous tripping, as applicable. Where an overcurrent relay is provided in series and adjacent to the circuit protective devices, the operating and time-current characteristics of the relay are to be considered for coordination. Typical thermal withstanding capacity curves of the generators are to be included, as appropriate.
(ii) An electric-plant load analysis is to cover all operating conditions of the ship, such as conditions in normal sea going, cargo handling, harbor maneuver, emergency, and dynamic positioning operations.

(c) Calculations of short circuit currents at main, emergency and sub-switchboards including those fed from transformers.
(i) Maximum calculated short circuit current values, both symmetrical and asymmetrical values, available at the main and emergency switchboards and the downstream distribution boards.
(ii) Rated breaking and making capacities of the protective devices.

(d) Explanation of electric propulsion system.

(e) For tankers, ships carrying liquefied gases in bulk and ships carrying dangerous chemicals in bulk, drawings indicating hazardous areas and the list of electrical equipment installed in the hazardous areas.

(f) Maintenance schedule of batteries

1.3 Ambient Reference Conditions

1.3.1 45°C is to be considered the standard ambient temperature for the inside of the boiler or machinery space and 32°C is to be considered the standard temperature for the inlet of sea water. For other spaces, a temperature of 40°C is to be taken as the standard ambient temperature.

1.3.2 The values as specified in the tables of limits of temperature rise in this Part are based on 45°C standard ambient temperature. For the ambient temperature of 40°C, these values may be increased by 5°C.

1.3.3 Where the ambient temperature of a space is in excess of the values specified in 1.3.1 above, the permissible temperature rise of the machine or equipment installed in that space is to be reduced by an amount equivalent to the excess temperature.

1.4 Inclination of Ship

1.4.1 Machines and apparatus are to operate satisfactorily under all conditions with the ship inclined up to the following angles from the normal:
athwartships,

static dynamic 15°
dynamic static 22.5°
fore-and-aft,
static dynamic 5°
dynamic static 7.5°

1.4.2 Emergency machines and apparatus fitted in accordance with statutory requirements are to operate satisfactorily when the ship is inclined up to 22.5° and/or when the trim of the ship is 10°.

1.4.3 In ships for the carriage of liquefied gas and of liquid chemicals the emergency source of electrical power is also to remain operable with the ship flooded to a final athwartships inclination up to a maximum of 30°.

1.5 Quality of Electrical Power Supplies

1.5.1 Voltage and Frequency Variations

All electrical equipment supplied from the main and emergency source of electrical power is to be so designed and manufactured that it is capable of operating satisfactorily under normally occurring variations of voltage and frequency.

Unless specified otherwise, A.C. electrical equipment, other than that supplied by battery systems, is to operate satisfactorily with the following simultaneous variations, from their nominal value, when measured at the consumer input terminals.

(a) voltage:
permanent variations +6%, –10%
transient variations ± 20%
recovery time 1.5 seconds

(b) frequency:
permanent variations ±5%
transient variations ±10%
recovery time 5 seconds

Unless specified otherwise, D.C. electrical equipment is to operate satisfactorily with the following simultaneous variations, from their nominal value, when measured at the consumer input terminals,

(a) When supplied by D.C. generators or rectified A.C. supply:
Voltage tolerance (continuous) ± 10%
Voltage cyclic variations deviation 5%
Voltage ripple (A.C. rms over steady state D.C. voltage) 10%

(b) When supplied by batteries:
(i) Equipment connected to the batteries during charging:
Voltage tolerance +30%, -25%
(ii) Equipment not connected to the batteries during charging:
Voltage tolerance +20%, -25%

Different voltage variations as determined by the charging/discharging characteristics, including ripple voltage from the charging device, may be considered. When battery chargers/battery combinations are used as D.C. power supply systems, adequate measures are to be taken to keep the voltage within the specified limits during charging, boost charging and discharging of the battery.

1.5.2 Harmonics

Unless specified otherwise, the total harmonic distortion (THD) of the voltage waveform at any switchboard or section-board is not to exceed 8% for all frequencies up to 50 times the supply frequency and no voltage at a frequency above 25 times supply frequency is to exceed 1.5% of the supply voltage.

1.6 Location and Construction

1.6.1 Electrical equipment is to be accessibly placed in well-ventilated and adequately lighted spaces where it is not exposed to risk of mechanical injury or damage arising from water, steam or oil. Where it is unavoidable to be exposed to such risks, the equipment is to be so constructed as to meet the conditions of the locations.

1.6.2 Bolts, nuts, pins, screws, terminals, studs, springs and such other small parts are to be made of corrosion resistant materials or steel suitably protected against corrosion.

1.6.3 Live parts are to be effectively shielded from any accidental contact when the voltage is above 250V D.C. or 150V, A.C.

1.6.4 All electrical apparatus are to be so constructed and so installed that it does not cause injury when handled or touched in the normal manner.

1.6.5 Insulating materials and insulated windings are to be resistant to moisture, sea air and oil vapour unless special precautions are taken to protect them.

1.6.6 Insulation Material

Insulating materials are to be classified by their maximum continuous operating temperatures in accordance with the following table:

Class	Maximum Continuous Temperature (°C)
A	105
E	120
B	130
F	155
H	180

Materials or combinations of materials which by experience or accepted tests can be shown to be capable of satisfactory operation at temperature over 180°C will also be considered. In this regard, supporting background information, reports, tests conducted, etc. ascertaining their suitability for the intended application and operating temperature are to be submitted for review.

1.6.7 Equipment is not to remain alive through the control circuits and/or pilot lamps when switched off by the control switch. This does not apply to synchronizing switches and/or plugs.

1.6.8 The operation of all electrical equipment and the lubrication arrangements are to be efficient under such conditions of vibration and shock as arise in normal practice.

1.6.9 All nuts and screws used in connection with current-carrying parts and working parts are to be effectively locked to prevent loosening due to vibration.

1.6.10 No electrical equipment is to be installed in any space where flammable mixtures are liable to collect including those on board oil tankers or in compartments assigned principally to accumulator batteries, in paint lockers, acetylene stores or similar spaces, unless the Society is satisfied that such equipment is:

(a) essential for operational purposes;

(b) of a type which will not ignite the mixture concerned;

(c) appropriate to the space concerned; and

(d) appropriately certified for safe usage in the dusts, vapours or gases likely to be encountered.

1.6.11 Generators and motors are preferably to be placed with their axis of rotation in the fore and aft direction of the ship. Where a machine is installed athwartship, it is to be ensured that the design of the bearings and the arrangements for lubrication are satisfactory to withstand the ship's inclination specified in 1.4.

1.6.12 The electrical equipment exposed to the weather or located in spaces exposed to sea splashing or other severe moisture condition is to be of the waterproof type or protected by means of waterproof enclosure.

1.6.13 Conductors and equipment are to be placed at such a distance from the magnetic compass or all to be so screened that the interfering external magnetic field is negligible, even when circuits are switches on and off.

1.7 Earthing

1.7.1 Exposed metal parts of electrical machines or equipment which are not intended to be live but which are liable under fault conditions to become live are to be earthed unless the machines or equipment are:

(a) supplied at a voltage not exceeding 50 V direct current or 50 V, root mean square between conductors; auto-transformers are not to be used for the purpose of achieving this voltage; or

(b) supplied at a voltage not exceeding 250 V by safety isolating transformers supplying only one consuming device; or

(c) constructed in accordance with the principle of double insulation.

1.7.2 Metal frames of all portable electric lamps, tools and similar apparatus supplied as unit's equipment and rated in excess of 50 V are to be earthed through a suitable conductor unless equivalent safety provisions are made such as by double insulation or by an isolating transformer.

1.7.3 Where earthing connections are necessary, they are to be of copper or other approved material and are to be protected against damage and, where necessary, against electrolytic corrosion. Connections are to be so secured that they cannot work loose under vibration.

1.7.4 In general, the nominal cross-section area of copper earthing conductor is to be equal to the cross-section of the current-carrying conductor up to 16 mm^2. Above this figure it is to be equal to at least half the cross-section of the current-carrying conductor with a minimum of 16 mm^2.

1.7.5 The connection of the earthing conductor to the hull of the ship is to be made in an accessible position, and is to be secured by a screw or stud of diameter not less than 6 mm which is to be used for this purpose only. Bright metallic surfaces at the contact areas are to be ensured immediately before the nut or screw is tightened and, where necessary, the joint is to be protected against electrolytic corrosion. The connection is to remain unpainted.

1.8 Bonding for the Control of Static Electricity

1.8.1 Bonding straps for the control of static electricity are required for cargo tanks, process plant and piping systems, for flammable products and solids liable to release flammable gas and/or combustible dust, which are not permanently connected to the hull of the ship either directly or via their bolted or welded supports and where the resistance between them and the hull exceeds 1 MΩ.

1.8.2 Where bonding straps are required for the control of static electricity, they are to be robust, that is, having a cross-sectional area of about 10 mm^2, and are to comply with 1.7.3 and 1.7.5.

1.9 Clearances and Creepage Distances

1.9.1 Clearances and creepage distances between live parts and between live parts and earthed metal, whether across surfaces or in air, are to be adequate for the working voltage having regard to the nature of the insulating material and the transient over-voltages developed by switch and fault conditions.

1.9.2 Bare main bus bars in main and emergency switchboards, but not including the conductors between the main bus bars and the supply side of out- going units, are to have minimum clearances (in air) and creepage distances (across surfaces) as given in Table VII 1-1.

Table VII 1-1
Minimum Clearance and Creepage Distances

Rated insulation Voltage (V)	Minimum Clearances (mm)	Minimum Creepage Distances (mm)
Up to 250	15	20
Over 250 to 660	20	30
Over 660 to 1000	25	35

Notes:
(1) The values in this table apply to clearances and creepage distances between live parts as well as between live parts and exposed conductive parts, including grounding.
(2) System with nominal voltage exceeding 1 kV (phase to phase) is to comply with the requirements of high voltage system in Chapter 14.

1.10 Electrical Equipment for Use in Explosive Gas Atmospheres

1.10.1 Where electrical equipment is installed in areas where explosive gas atmospheres may be present, it is to be of a "safe type", certified for the gases/ varpours involved. The construction and type testing is to be in accordance with IEC Publication 60079, Electrical Apparatus for Explosive Gas Atmospheres, or an equivalent national standard.

1.10.2 Certified safe type equipment includes the following types of protection:

(a) Intrinsically safe – Ex "i".

An intrinsically safe equipment is one which is supplied by a low energy circuit which when sparking, produced normally by breaking or making the circuit or produced accidentally (i.e., by short circuit or earth-fault), is incapable under prescribed test conditions of causing ignition of a prescribed gas or vapor.

(b) Increased safety – Ex "e"

Increased safety equipment is designed to give increased security against the possibility of excessive temperatures and the occurrence of arcs or sparks in electrical apparatus which does not produce arcs or sparks in normal service.

(c) Flameproof – Ex "d"

Flameproof equipment is one which possesses an enclosure capable of withstanding, without damage, an explosion of a prescribed flammable gas or vapor within the enclosure and prevent the transmission of flame or sparks which would ignite the external prescribed flammable gas or vapor for which it is designed, and which normally operates at an external temperature that will not ignite the external prescribed flammable gas or vapor. A flameproof enclosure may not necessarily or ordinarily be weatherproof or dustproof.

(d) Pressurized enclosure – Ex "p"

Pressured equipment is designed with an enclosure in which the entry of flammable gases or vapors is prevented by maintaining the air (or other non-flammable gas) within the enclosure at a specified pressure above that of the external atmosphere. Purged equipment is designed with an enclosure in which a sufficient flow of fresh air or inert gas is maintained through the enclosure to prevent the entry of any flammable gas or vapor which may be present in the ambient atmosphere.

1.10.3 In addition, lighting fittings of the air driven type with pressurized enclosure are considered to be a "safe type" of lighting fitting.

1.10.4 When "safe type" equipment is permitted in hazardous zones or spaces all switches and protective devices are to interrupt all lines or phases and, where practicable, are to be located in a non-hazardous zone or space unless

specifically permitted otherwise. Such equipment, switches and protective devices are to be suitably labeled for identification purposes.

1.10.5 Paint stores or enclosed spaces leading to paint stores

In principle, within the paint store; open deck area within 1 m from ventilation inlet and natural ventilation outlet; and open deck area within 3 m from power ventilation outlet are to be regarded as hazardous areas.

(a) Electrical equipment is to be installed in paint stores and in ventilation ducts serving such spaces only when it is essential for operational services. Certified safe type equipment specified in 1.10.2 of this chapter is acceptable.

(b) Electrical equipment for use in paint stores is to have minimum explosion group IIB and temperature class T3.

(c) In the areas on open deck within 1 m of inlet and exhaust ventilation openings of paint stores or 3 m of exhaust mechanical ventilation outlets of such spaces, following electrical equipment may be installed:
   (i) Electrical equipment with the type of protection as permitted in paint stores.
   (ii) Appliances which do not generate arcs in service and whose surface does not reach unacceptably high temperature.
   (iii) Appliances with simplified pressurised enclosures or vapour proof enclosures (minimum class of protection IP55) whose surface does not reach unacceptably high temperature.
   (iv) Cables of armoured type or installed in metallic conduit are to be used.

(d) Enclosed spaces giving access to paint stores may be considered as non-hazardous, provided that:
   (i) The door to the paint store is a gastight door with self-closing devices without holding back arrangements.
   (ii) The paint store is provided with an acceptable, independent, natural ventilation system ventilated from a safe area.
   (iii) Warning notices are fitted adjacent to the paint store entrance stating that the store contains flammable liquids.

1.10.6 Battery room

In principle, within the battery room; open deck area within 1 m from natural ventilation outlet, and open area within 3 m from power ventilation outlet are to be regarded as hazardous areas.

(a) Electric ventilator motors are to be outside ventilation ducts and, if within 3 m of the exhaust end of the duct, they are to be of an explosion-proof safe type. The impeller of the fan is to be of the non-sparking type.

(b) Overcurrent protective devices are to be installed as close as possible to, but outside of, battery rooms.

(c) Electrical cables other than those pertaining to the equipment arranged in battery rooms are not permitted.

(d) Electrical equipment for use in battery rooms is to have minimum explosion group IIC and temperature class T1.

1.10.7 Welding gas (Oxygen-acetylene) storage room

In principle, within the storage room; open deck area within 1 m from natural ventilation outlet, open area within 3 m from power ventilation outlet; and the area within 3 m of the gas cylinders pressure relief device discharge outlet are to be regarded as hazardous areas.

(a) Electric ventilator motors are to be outside ventilation ducts and, if within 3 m of the exhaust end of the duct, they are to be of an explosion-proof safe type. The impeller of the fan is to be of the non-sparking type.

(b) Electrical equipment for use in oxygen-acetylene room is to have minimum explosion group IIC and temperature class T2.

1.11 Protection of Electrical Enclosures

Electrical equipment is to have a degree of enclosure for protection against the intrusion of foreign objects and liquids, appropriate for the location in which it is installed. The minimum degree of protection is to be in accordance with Table VII 1-2.

Table VII 1-2
Minimum Required Degree of Protection

Example of location	Condition in location	Equipment								
		Switchboard, control gear, motorstarters	Generators	Motors	Transformers	Lighting fixtures	Heating appliances	Cooking appliances	Socket outlets	Accessories (e.g., switches, detector, connection boxes)
Dry accommodation spaces, dry control rooms	Danger of touching live parts only	IP20	-	IP20	IP20	IP20	IP20	IP20	IP20	IP20
Control rooms, wheel house, radio room	Danger of dripping liquid and/or moderate mechanical damage	IP22	-	IP22	IP22	IP22	IP22	IP22	IP22	IP22
Engine and boiler rooms above floor		IP22	IP22	IP22	IP22	IP22	IP22	IP22	IP44	IP44
Steering gear rooms		IP22	IP22	IP22	IP22	IP22	IP22	-	IP44	IP44
Emergency machinery rooms		IP22	IP22	IP22	IP22	IP22	IP22	-	IP44	IP44
General storerooms		IP22	-	IP22	IP22	IP22	IP22	-	IP22	IP44
Pantries		IP22	-	IP22	IP22	IP22	IP22	IP22	IP44	IP44
Provision rooms		IP22	-	IP22	IP22	IP22	IP22	-	IP44	IP44
Ventilation ducts		-	-	IP22	-	-	-	-	-	-
Bathroom and/or showers	Increased danger of liquid and/or mechanical damage	-	-	-	-	IP34	IP44	-	IP55	IP55
Engine and boiler rooms below floor		-	-	IP44	-	IP34	IP44	-	-	IP55
Closed fuel oil separator rooms		IP44	-	IP44	IP44	IP34	IP44	-	-	IP55
Closed lubricating oil separator rooms		IP44	-	IP44	IP44	IP34	IP44	-	-	IP55
Ballast pump rooms	Increased danger of liquid and mechanical damage	IP44	-	IP44(2)	IP44(2)	IP34	IP44	-	IP55	IP55
Refrigerated rooms		-	-	IP44	-	IP34	IP44	-	IP55	IP55
Galleys and laundries		IP44	-	IP44	IP44	IP34	IP44	IP44	IP44	IP44
Public bathroom and showers		-	-	IP44	IP44	IP34	IP44	-	IP44	IP44
Shaft or pipe tunnels in double bottom	Danger of liquid spraying, presence of cargo dust, serious mechanical damage, aggressive fumes	IP55	-	IP55	IP55	IP55	IP55	-	IP56	IP56
Holds for general cargo		-	-	IP55	-	IP55	IP55	-	IP56	IP56
Ventilation trunks		-	-	IP55	-	-	-	-	-	-
Open decks	Danger of liquid in massive quantities	IP56	-	IP56	-	IP55	IP56	-	IP56	IP56
Bilge wells	In water	-	-	-	-	IPX8	-	-	-	IPX8

Notes:

(1) The symbol "-" denotes equipment which it is not advised to install.

(2) Electric motors and starting transformers for lateral thruster propellers located in spaces similar to ballast pump rooms may have degree of protection IP22.

1.12 Testing and Inspection

1.12.1 All generators, including emergency generators, motors, and other rotating machines for essential auxiliary services are to be tested in the presence of the Surveyor, preferably at the plant of the manufacturer.

1.12.2 Shop tests of generators are to be carried out in accordance with Chapter 3 of this Part.

1.12.3 Shop tests of motors are to be carried out in accordance with Chapter 4 of this Part.

1.12.4 Switchboards are to be inspected in the presence of the Surveyor at the plant of the manufacturer in accordance with Chapter 5 of this Part.

1.12.5 Motor controllers are to be inspected in the presence of the Surveyor at the plant of the manufacturer in accordance with Chapter 9 of this Part.

1.12.6 The shaft material of generators and motors of 375 kW and over is to be tested in accordance with the requirements of Part XI. For the shaft material of machines below 375 kW the manufacturer's certificate of material test is to be acceptable in each case provided the test record submitted by the manufacturer is satisfactory.

1.12.7 Transformers are to be inspected in the presence of the Surveyor at the plant of the manufacturer in accrodance with Chapter 7 of this Part.

1.12.8 Cables are to be inspected in the presence of the Surveyor at the plant of the manufacturer in accordance with Chapter 8 of this Part

1.12.9 Semiconductor equipments are to be inspected in the presence of the Surveyor at the plant of the manufacturer in accordance with Chapter 15 of this Part.

1.12.10 Uninterruptible power systems are to be inspected in the presence of the Surveyor at the plant of the manufacturer in accordance with Chapter 18 of this Part.

1.12.11 The electrical equipment for use in explosive gas atmospheres is to be approved and tested in the presence of the Surveyor.

Chapter 2

System Design of Distribution and Circuit Protection

2.1 System Design - General

2.1.1 Distribution systems

(a) The following distribution systems are considered as standard:
- (i) Two-wire direct current.
- (ii) Three-wire direct current (three-wire insulated system or three-wire mid-wire earthed system).
- (iii) Two-wire, single-phase alternating current.
- (iv) Three-wire, three-phase alternating current.
- (v) Four-wire, three-phase alternating current.

(b) The voltage of electric supply is not to exceed:
- (i) 500 V A.C. and D.C. for generators, power equipment, and heating and cooking equipment connected to fixed wiring.
- (ii) 250 V A.C. and D.C. for lighting, heaters in cabins and public rooms, equipment other than those specified in (i).
- (iii) 15,000 V A.C. and 1,500 V D.C. installations for electric propulsion.
- (iv) 15,000 V A.C. for A.C. generators and A.C. power equipment meeting the requirements in Chapter 14.

(c) The hull return system of distribution is not to be used for any purpose in a tanker, or for power, heating, or lighting in any other ship of gross tonnage 1,600 and upwards, except the following:
- (i) Impressed current cathodic protection systems for external hull protection.
- (ii) Limited and locally earthed systems, provided that any possible resulting current does not flow directly through any dangerous spaces.
- (iii) Insulation monitoring systems provided the circulation current does not exceed 30 mA under any circumstances.

(d) Where the hull return system is used, all final subcircuits, i.e. all circuits fitted after the last protective device, are to be two-wire and special precautions are to be taken to the satisfaction of the Society.

(e) Earthed distribution systems are not to be used in a tanker, except as permitted by paragraph (f).

(f) The requirements of paragraph (e) does not preclude the use of earthed intrinsically safe circuits and in addition, under conditions approved by the Society, the use of the following earthed systems:
- (i) power-supplied control circuits and instrumentation circuits where technical or safety reasons preclude the use of a system with no connection to earth, provided the current in the hull is limited to not more than 5A in both normal and fault conditions; or
- (ii) limited and locally earthed systems, provided that any possible resulting current does not flow directly through any of the dangerous spaces; or
- (iii) alternating current power networks of 1,000 V root mean square (line to line) and over, provided that any possible resulting current does not flow directly through any of the dangerous spaces.

2.1.2 Insulation monitoring system

When a distribution system, whether primary or secondary, for power, heating or lighting, with no connection to earth is used, a device capable of continuously monitoring the insulation level to earth and of giving an audible or visual indication of abnormally low insulation values is to be provided.

2.1.3 Unbalance of load

(a) Unbalance of loads between an outer conductor and the middle wire at the switchboards, section boards and distribution boards is not to exceed 15% of the full load current as far as possible.

(b) Unbalance of loads on each phase at the switchboards, section boards and distribution boards is not to exceed 15% of the full load current as far as possible.

2.1.4 Diversity factor

(a) Circuits supplying two or more final-subcircuits are to be rated in accordance with the total connected load subject, where justifiable, to the application of a diversity factor. Where spare ways are provided on a section or distribution board, an allowance for future increase of load is to be added to the total connected load before application of any diversity factor.

(b) The diversity factor specified in (a) above may be applied to the calculation of the cross sectional area of conductors and ratings of switchgears (including circuit breakers and switches) and fuses.

2.1.5 Feeder circuits

(a) Electric motors for essential services requiring dual arrangement are to be supplied by individual circuits without the use of common feeders, protective devices and control gears.

(b) Auxiliaries, cargo gear motors and ventilating fans in the machinery space are to be independently supplied from switchboards or distribution boards.

(c) Ventilating fans for the cargo hold and those for the accommodation spaces are not to be supplied from the common feeder circuits.

(d) Lighting circuits and motor circuits are to be arranged to be supplied independently from the switchboards.

(e) A final sub-circuit of rating exceeding 15 A is not to supply more than one appliance.

2.1.6 Motor circuits

A separate final sub-circuit is to be provided for every motor for essential service and for every motor of rating at 1 kW or more.

2.1.7 Lighting circuits

(a) Lighting circuits are to be supplied by final sub-circuits separate from those for heating and power except cabin fans and electrical appliances for domestic use.

(b) For a lighting circuit suppplied by a final sub-circuit of rating 15 A or less, the connected load is not to exceed 80% of the overload protective device rating or setting.

(c) In a final sub-circuit for panel lighting and electric signs, where lampholders are closely grouped, the maximum operating current in the sub-circuit is not to exceed 10 A.

(d) In spaces such as compartments where the main engine or boilers are provided, large machinery rooms, large galleys, corridors, stairways leading to boat-decks and public spaces, lighting is to be supplied from at least two circuits and to be so arranged that failure of any one circuit will not leave these spaces in darkness. One of the circuits may be emergency lighting circuit.

(e) Emergency lighting circuits are to be in accordance with the requirements in Chapter 11 of this Part.

(f) Lighting for enclosed hazardous spaces is to be supplied from at least two final sub-circuits to permit light from one circuit to be retained while maintenance is carried out on the other.

2.1.8 Circuits for internal communication systems and navigational aids

(a) Essential internal communication and signal systems and navigational aids are to have completely self-sustaining independent circuits for ensuring the perfect maintenance of their functions as far as possible.

(b) Cables for communication systems are to be so arranged that no induced interference would be caused.

(c) No switch is to be provided for feeder circuits of general alarm devices, except for operating switch. Where circuit breaker is used, suitable means are to be taken to prevent the breaker from being kept "off" position.

2.1.9 Circuits for radio installation

Feeder circuits for radio installation are to be arranged in accordance with the requirements of relevant international and national regulations.

2.1.10 Circuits for electric heating and cooking equipment

(a) Each item of electric heating and cooking equipment is to be connected to a separate final sub-circuit except that up to 10 small electric heaters of aggregate current rating not exceeding 15 A may be connected to single final sub-circuit.

(b) Electric heating and cooking equipment are to be controlled by the multi-pole linked switches mounted in the vicinity of the equipment. However, small electric heaters connected to the final sub-circuit of rating not exceeding 15 A may be controlled by a single-pole switch.

2.1.11 Circuits for shore connection

(a) Where arrangements are made for the supply of electricity from a source on shore, a connection box is to be installed in a suitable position. In case where shore connection cables can be drawn into a switchboard easily and put into service safely, the connection box may be omitted, provided that the protective devices and checking devices stipulated in (b) are equipped on the switchboard.

(b) The connection box is to contain terminals to facilitate a satisfactory connection and a circuit-breaker or an isolating switch with fuses. Means are to be provided for checking the phase sequence (for three-phase alternating current) or the polarity (for direct current).

(c) In case where power is supplied from the three-wire neutral earthed system, an earth terminal is to be provided for connecting the hull to an appropriate earth in addition to those specified in (b) above.

(d) At the connection box a notice is to be provided giving information on the system of supply and nominal voltage (and frequency if A.C.) of system and the procedure for carrying out the connection.

(e) The cables between the connection box and the switchboard are to be permanently fixed and a pilot lamp for source and a switch or a circuit-breaker are to be provided on the switchboard.

2.1.12 Disconnecting switch of circuits

(a) Power circuits and lighting circuits terminating in the cargo holds or coal bunkers are to be provided with the multipole linked switches situated outside these spaces. Provision is to be made for the complete isolation of these circuits and locking in the "off" position of the switches or switch boxes.

(b) Feeder circuits for the electrical equipment installed in dangerous spaces are to be provided with multi-pole linked isolation switches in a safe space. In addition, the isolation switches are to be clearly labelled to identify the electrical equipment to be connected with.

2.1.13 Remote stopping of ventilating fans and pumps

(a) Power ventilation of accommodation spaces, service spaces, cargo spaces, control stations and machinery spaces is to be capable of being stopped from an easily accessible position outside the space being served. This position is not be readily cut off in the event of a fire in the spaces served. The means provided for stopping the power ventilation of the machinery spaces is to be entirely separated from the means provided for stopping ventilation of other spaces.

(b) The motors for the fuel oil burning pumps, fuel oil transfer pumps, fuel valve cooling oil pumps, thermal oil circulating pumps, lubricating oil service pumps, or other similar pumps, fuel oil purifiers, cargo oil pumps and forced and induced draught fans are to be capable of being stopped from an easily accessible position outside the space being served. This position is not to be readily cut off in the event of a fire in the space served.

2.1.14 Fire detection and extinguishing systems

(a) Where an electrically driven fire pump is supplied from the emergency generator the supply to such pump is not to pass through the main machinery spaces. The cables are to be of a fire resistant type where they pass through high fire risk areas.

(b) Electrical equipment used in operating fire detecting equipment is to be served by two exclusive circuits, reserved solely for this purpose, one fed from the main power source and one from an emergency power source. Such feeders are to be connected to an automatic change-over switch situated near to the fire detection panel.

2.2 System Design - Protection

2.2.1 General

Installations are to be protected against accidental overcurrents including short-circuit. The protective devices are to provide complete and coordinated protection to ensure:

(a) Continuity of service under fault conditions through discriminative action of the protective devices to maintain supply to healthy circuits.

(b) Elimination of the fault to reduce damage to the system and hazard of fire.

2.2.2 Protection against overload

(a) Circuit-breakers and automatic switches provided for overload protection are to have tripping characteristics appropriate to the system. Fuses above 320 A are not to be used for overload protection, but may be used for short-circuit protection.

(b) The rating or appropriate setting of the overload protection device for each circuit is to be permanently indicated at the location of the protection device.

(c) The overload relays of circuit-breakers for generators and the setting of preferential trip relays are to be adjustable or, if of the non-adjustable type, are to be readily replaceable by others of different values.

2.2.3 Protection against short-circuit

(a) Protection against short-circuit currents is to be provided by circuit-breakers or fuses.

(b) The breaking capacity of every protective device is to be not less than the maximum value of the short-circuit current which can flow at the point of installation at the instant of contact separation.

(c) The making capacity of every circuit-breaker or switch intended to be capable of being closed, if necessary, on short-circuit, is to be not less than the maximum value of the short-circuit current at the point of installation. On alternating current this maximum value corresponds to the peak value allowing for maximum asymmetry.

(d) Every protective device or contactor not intended for short-circuit interruption is to be adequate for the maximum short-circuit current which can occur at the point of installation having regard to the time required for the short-circuit to be removed.

(e) The use of a circuit-breaker of breaking capacity less than the prospective short-circuit current at the point of installation is permitted, provided that it is preceded on the generator side by fuses, or by a circuit-breaker having at least the necessary breaking capacity. The generator breakers are not to be used for this purpose.

(f) Circuit-breakers with fuses connected to the load side may be used where operation of the circuit-breaker and fuses is coordinated.

(g) The characteristics of the arrangement is to be such that:

(i) When the short-circuit current is broken, the circuit-breaker on the load side is not be damaged and is to be capable of further service.

(ii) When the circuit-breaker is closed on the short circuit current, the remainder of the installation is not to be damaged. However, it is admissible that the circuit-breaker on the load side may require servicing after the fault has been cleared.

(h) In the absence of precise data, the following short circuit currents at the machine terminals are to be assumed:

(i) Direct current systems

Ten times full load current for generators that may be connected simultaneously.

Six times full load current for motors simultaneously in service.

(ii) Alternating current systems

Ten times full load current for generators that may be connected simultaneously.

Three times full load current for motors simultaneously in service.

The value derived from the above is an approximation to the r.m.s. symmetrical fault current; the peak asymmetrical fault current may be estimated to be 2.5 times this figure (corresponding to a fault power factor of approximately 0.1).

2.2.4 Protection of circuits

(a) Each pole and phase of all insulated circuits except neutral and equalizer circuits are to be provided with short-circuit protection.

(b) All circuits liable to be overloaded are to be provided with overload protection as indicated below:

(i) Two-wire D.C. or single-phase A.C. system – at least one line or phase.

(ii) Three-wire D.C. system – both outer lines.

(iii) Three-phase, three-wire system – each phase.

(iv) Three-phase, four-wire system – each phase.

(c) Fuse, non-linked switch or non-linked circuit-breaker is not to be inserted in an earthed conductor and a neutral line.

2.2.5 Protection of generators

(a) Overload protection

Generators are to be protected against overcurrent by circuit breakers arranged to open simultaneously all insulated poles, or in the case of generators less than 25 kW not arranged to run in parallel, may be protected by a multipole-linked switch with fuse or a circuit-breaker in each insulated pole. The overload protection is to be suitable to the thermal capacity of generators. The long-time delay overcurrent protection of the circuit

breaker is not to exceed 15% above either the full-load rating of continuous-rated machines or the overload rating of special-rated machines. Where generators are operated in parallel and essential machinery is electrically driven, arrangements are to be made to disconnect automatically the excess non-essential load when the generators are overloaded. If required, this preference tripping may be carried out in one or more stages. See 11.2.2 of this Part.

(b) Short circuit protection

Generators are to be protected for short circuit by circuit breakers provided with short-time delay trips. For coordination with feeder circuit breakers, the short-time delay trips are to be set at the lowest values of current and time which will coordinate with the trip settings of feeder circuit breakers. The current setting of the short time delay trip is to be less than the steady state short circuit current of the generator.

(c) Instantaneous trip

Where two or more AC generators are arranged for parallel operation, each generator's circuit breaker is, in addition, to be provided with instantaneous trip set in excess of the maximum short circuit contribution of the individual generator.

(d) Reverse Power Protection

A reverse power protection device is to be provided for each generator arranged for parallel operation. The setting of the protective devices is to be in the range 2% to 6% of the rated power for turbines and in the range 8% to 15% of the rated power for diesel engines. A setting of less than 8% of the rated power of diesel engines may be allowed with a suitable time delay recommended by the diesel engine manufacturer.

(e) Undervoltage Protection

Generators arranged for parallel operation are to be provided with means to prevent the generator circuit breaker from closing if the generator is not generating, and to open the same when the generator voltage collapses. In the case of an undervoltage release provided for this purpose, the operation is to be instantaneous when preventing closure of the breaker, but is to be delayed for discrimination purposes when tripping a breaker.

2.2.6 Protection of feeder circuits

(a) All feeder circuits are to be protected in accordance with the current carrying capacities. Feeder and branch circuits for lighting, heating or ship's service power are to have each ungrounded conductor protected by circuit breaker or fuses of suitable interrupting capacity.

(b) Supply circuits to section boards, distribution boards, grouped starters and the similar are to be protected against overload and short-circuit by multi-pole circuit-breakers or fuses. In case where the fuses are used, the switches which are capable of breaking and making safely a load current equal to 150% of their rated current at the rated voltage are to be provided at the power source side of the fuses.

(c) Each insulated pole of the final sub-circuits is to be protected against short-circuit or overload by a circuit breaker or fuse. For the protection of supply circuits of the steering gears, the requirements in 2.3 of this Part are to apply.

(d) Circuits which supply motors fitted with overload protection may be provided with short-circuit protection only.

(e) Where fuses are used to protect polyphase A.C. motor circuits, consideration is to be given to protection against single phasing.

(f) Where condensers for phase advance are used, over-voltage protective devices are to be installed as required.

2.2.7 Protection of Electric Motors

(a) Motors of rating exceeding 0.5 kW and all motors for essential services, except the motors for steering gears, are to be protected individually against overload. The overload protection of motors for the steering gears is to comply with the requirements in 2.3.2 of this Part.

(b) The protective device is to have a delay characteristics to enable the motor to start.

(c) For motors for intermittent services, the current setting and the delay are to be chosen in relation to the load factor of the motor.

(d) Over current trips of circuit breakers or fuses are to have a rating not greater than the allowable carrying capacity of the conductors protected except that for motor branch circuits the ratings may be increased.

(e) The maximum setting of the circuit breaker trip element for motor branch circuit is to be the standard value equal to or, if not in exact agreement, next above the value stated below in percent motor full load current.

D.C. motor	150%
A.C. motor:	
Full voltage, reactor or resister starting	250%
Autotransformer starting	200%
Wound rotor	150%

(f) Undervoltage Protection

Undervoltage protection is to be provided for motors of rating exceeding 0.5 kW to prevent undesired restarting upon restoration of the normal voltage, after a stoppage due to a low voltage condition or voltage failure condition.

(g) Undervoltage Release Protection

Undervoltage release is to be provided for the following motors unless the automatic restart upon restoration of the normal voltage will cause hazardous conditions:

(i) Essential services (See 1.3.2 of Part IV).

(ii) Essential services necessary for safety (See 1.3.3 of Part IV), such as:

(1) Fire pumps and other fire extinguishing medium pumps.

(2) Ventilating fans for engine and boiler rooms where their failure to restart may prevent the normal operation of the propulsion machinery. Undervoltage protection is to be provided for ventilation fans for engine and boiler room, which are supplied by an emergency source of power for the purpose of removing smoke from the space after a fire has been extinguished.

Special attention is to be paid to the starting currents due to a group of motors with undervoltage release controllers being restarted automatically upon restoration of the normal voltage. Means such as sequential starting is to be provided to limit excessive starting current, where necessary.

2.2.8 Protection of power and lighting transformers

The primary circuits of power and lighting transformers are to be protected against short-circuit and overcurrent by multi-pole circuit-breakers or fuses.

When transformers are arranged to operate in parallel, a means of isolation is to be provided on the secondary circuits.

2.2.9 Protection of lighting

Lighting circuits are to be protected against short-circuit and overload.

2.2.10 Protections of meters, pilot lamps and control circuits

(a) Protection is to be provided for voltmeters, voltage coils of measuring instruments, earth indicating devices and pilot lamps together with their connecting leads by means of fuses fitted to each insulating pole.

(b) A pilot lamp installed as an integral part of another item of equipment need not be individually protected, provided that any damage of pilot lamp circuit does not cause failures on the supply to essential equipment.

(c) Insulated wires for control and instrument circuits directly led from busbars and generator mains are to be protected by fuses at the nearest location to the connecting points. Insulated wires between the fuses and the connecting points are not to be bunched together with the wires for other circuits.

(d) Fuses in circuits such as those of automatic voltage regulators where loss of voltage might have serious consequences may be omitted. If omitted, proper means are to be provided to prevent risk of fire in the unprotected part of the installation.

2.2.11 Protection of batteries

Accumulator batteries other than engine starting batteries are to be protected against overload and short-circuit with devices placed as near as practicable to the batteries. Emergency batteries supplying essential services may have short-circuit protection only.

2.3 Electric Power and Control Circuits for Steering Gear

2.3.1 Short circuit protection, an overload alarm and, in the case of polyphase circuits, an alarm to indicate single phasing is to be provided for each main and auxiliary motor circuit.

2.3.2 Only short circuit protection is to be provided for the steering circuit on the switchboard or emergency switchboard. The setting values are to be as follows:

(a) For D.C. circuit

(i) On the main switchboard:

300 to 375% of the motor rating .

(ii) On the emergency switchboard:

Not less than 200% of the motor rating.

(b) For A.C. circuit breaker on all switchboard

200% of the steady state locked rotor current of one steering gear motor plus all other loads that may be on this feeder.

2.3.3 Indicators for running indication of each main and auxiliary motor are to be installed on the navigating bridge and at a suitable main machinery control position.

2.3.4 Two exclusive circuits are to be provided for each electric or electrohydraulic steering gear arrangement consisting of one or more electric motors.

2.3.5 Each of these circuits is to be fed from the main switchboard. One of these circuits may pass through the emergency switchboard.

2.3.6 One of these circuits may be connected to the motor of an associated auxiliary electric or electro hydraulic power unit.

2.3.7 Each of these circuits is to have adequate capacity to supply all the motors which can be connected to it and which can operate simultaneously.

2.3.8 These circuits are to be separated throughout their length as widely as is practicable.

2.3.9 In ships of less than 1,600 gross tonnage, if an auxiliary steering gear is not electrically powered or is powered by an electric motor primarily intended for other services, the main steering gear may be fed by one circuit from the main switchboard. Consideration will be given to other protective arrangements than described in 2.3.1 above for such a motor primarily intended for other services.

2.3.10 Power from either the emergency source of power or from a source of power located within the steering gear compartment is to be provided automatically within 45 seconds for all ships having a required rudder stock of over 230 mm diameter in way of the tiller. This source of power is to be capable of moving the rudder from 15° on one side to 15° on the other side in not more than 60 seconds with the ship at its deepest seagoing draught while running ahead at $\frac{1}{2}$ of the maximum ahead service speed or 7 knots, whichever is the greater. In every ship of 10,000 gross tonnage and upward, the capacity is to be sufficient for at least 30 minutes of continuous operation and in any other ship for at least 10 minutes of continuous operation.

2.3.11 Electric control systems are to be independent and separated as far as is practicable throughout their length.

2.3.12 Each main and auxiliary electric control system which is to be operated from the navigating bridge is to comply with the following:

(a) It is to be served with electric power by a separate circuit supplied from the associated steering gear power circuit, from a point within the steering gear compartment, or directly from the same section of switchboard busbars, main or emergency, to which the associated steering gear power circuit is connected.

(b) Each separate circuit is to be provided with short circuit protection only.

2.3.13 Monitoring and alarms

Alarms and monitoring requirements are indicated in Table VII 2-1.

Table VII 2-1
Monitoring and Alarms for Steering Gear

Item	Alarm	Note
Rudder position	–	Indication
Steering gear power units, power	Failure	–
Steering gear motors	Overload, single phase	Also running indication on bridge and machinery control station, see 2.3.3 of this Part
Control system Power	Failure	–
Steering gear hydraulic oil tank level	Low	Each tank to be monitored
Auto pilot	Failure	Running indication

2.4 Navigation Lights

2.4.1 Navigation Light means the following lights:

(a) masthead light, sidelights, sternlight, towing light, all-round light, flashing light as defined in Rule 21 of COLREGs;

(b) all-round flashing yellow light required for air-cushion vessels by Rule 23 of COLREGs; and

(c) manoeuvring light required by Rule 34(b) of COLREGs.

2.4.2 Navigation lights are to be connected separately to a special distribution board which is not to supply any other group. This distribution board is to be placed in an accessible position to the officers of the watch.

2.4.3 The navigation distribution board is to be provided with a change over switch making it possible to obtain supply for this board from the ship's main and emergency sources of electrical power, and each navigation light is to be protected by a fuse switch on each insulated pole fitted on the distribution board.

2.4.4 Each navigation light is to be provided with an automatic indicator giving audible and visible warning in the event of extinction of the light. This requirement may be modified for tugs, trawlers of fishing and small ships.

2.5 Internal Communication

2.5.1 Internal communication circuits such as the engine room telegraph, revolution counter, rudder angle indicator, alarm system (automatic or manual), siren, bell, telephone and loud speaker installation, signal lighting system, electric log, remote temperature control, indication system, etc. are to comply with the following requirements.

2.5.2 The supply source of the internal communication system may be derived from the general lighting and power sources or from the motor-generator, transformer, storage battery and dry cell for the low voltage system.

2.5.3 Electric interior communication and signal systems forming part of the essential operating systems of the ship are to be as independent and self-sustaining as possible.

2.5.4 The voltage of supply for internal communication circuits is to be between 20V and 120V of D.C. or A.C. For simple circuits, voltages of not less than 6V may be used.

2.5.5 Communication circuits other than those supplied from the primary battery are to be protected on such insulated pole by the fuse of a current rating of the cables to be protected.

2.5.6 Cables used for the internal communication are to be suitable for the rated voltage and the current of the connected load. The voltage drop is to be so limited that the normal operation of the connected equipment is ensured. Cables are to be kept separate from the power and lighting unless they are of similar type.

2.5.7 A general emergency alarm system complying with the requirement of following is to be provided to summon passenger and crew to muster stations and initiate the actions included in the muster list. The system is to be supplemented by either a public address system in accordance with 2.5.11 or other suitable means of communication. Any entertainment sound system is to be automatically turned off when the general emergency alarm is activated.

(a) The general emergency alarm system is to be capable of sounding the general emergency alarm signal consisting of seven or more short blasts followed by one long blast on the ship's whistle or siren and additionally on an electrically operated bell or klaxon or other equivalent warning system, which is to be powered from the ship's main supply and the emergency source of electrical power required by 11.3 or 11.4. The supply is to be provided by separate feeders reserved soley for that purpose. The system is to be capable of operation from the navigation bridge and, except for the ship's whistle, also from other strategic points. The system is to be audible throughout all the accommodation and normal crew working spaces. The alarm is to continue to function after it has been triggered until it is manually turned off or is temporarily interrupted by a message on the public address system.

(b) The minimum sound pressure levels for the emergency alarm tone in interior spaces are to be 80 dB(A) and at least 10 dB(A) above ambient noise levels existing during normal equipment operation with the ship underway in moderate weather. In cabins without a loud speaker installation, an electronic alarm transducer is to be installed, eg. a buzzer or similar.

(c) The sound pressure levels at the sleeping position in cabins and in cabin bathrooms are to be at least 75dB(A) and at least 10 dB(A) above ambient noise levels.

2.5.8 An engine order telegraph system is to be provided for communicating orders from the navigating bridge to the main propulsion control station in the engine room, and for transmitting acknowledgement of orders from the main propulsion control station to the navigating bridge.

2.5.9 A common talking means of voice communication and calling is to be provided between the navigating bridge, main propulsion control station, and the steering gear compartment so that the simultaneous talking among these spaces is possible at all times and the calling to these spaces is always possible even if the line is busy. Where an elevator is installed, a telephone is to be permanently installed in all cars and connected to a continuously manned area. These systems are to be independent of the ship's service electrical system.

2.5.10 A common talking means of voice communication and calling or engine order telegraph repeater is to be provided between the main propulsion control station and local control positions for main propulsion engines and controllable pitch propellers. Voice communication systems are to provide the capability of carrying on a conversation while the ship is being navigated. These systems are to be independent of the ship's service electrical system and the control monitoring, and alarm circuits but may be combined with the system required in 2.5.9 above.

2.5.11 A public address system is to be provided to supplement the general emergency alarm required by 2.5.7, unless other suitable means of communication is provided. Tthe public address system is to comply with the following:

(a) The system is to be a loud speaker installation enabling the broadcast of messages to all spaces where crew members or passengers, or both, are normally present and to muster stations. The system is to provide for the broadcast of messages from the navigation bridge and other places on board as may be required by the Society, with an override function so that all emergency messages may be broadcast if any loudspeaker in the spaces concerned has been turned off, its volume has been turned down or the public address system is in used for other purpose.

The system is to be installed with regard to acoustically marginal conditions and is not to require any action from the addressee. The system is to be protected against unauthorized use.

(b) With the ship underway in normal conditions, the minimum sound pressure levels for broadcasting emergency announcements in interior spaces are to be 75 dB(A) and at least 20 dB(A) above the corresponding speech interference level; and in exterior spaces are to be 80 dB(A) and at least 15 dB(A) above the corresponding speech interference level.

(c) The system is to be connected to the emergency source of power.

(d) Where a single system for both public address and general emergency alarm functions , the system is to be arranged so that single failure is not to cause the loss of both systems and is to minimize the effect of a single failure. The major system components, such as power supply unit, amplifier, alarm tone generator,etc.,are to be duplicated. Power supply is to comply with 2.5.7(a)

For cargo ships, the coverage provided by the arrangement of the system loops and speakers is to be such that after a single failure, the announcements and alarms are still audible in all spaces. Duplication of system loops and speakers in each room or space is not required provided the announcements and alarms are still audible in all spaces.

For passenger ships, a single system serving for both public address and general emergency alarm functions would still be required to have at least two loops sufficiently separated throughout their length with two separate and independent amplifiers.

2.5.12 Engineers' Alarm

The engineers' alarm is to comply with the requirement specified in 1.6.10.(c) of Part IV.

2.5.13 Refrigerated Space Alarm

Each refrigerated space is to be fitted with means to activate an alarm in a normally manned control station, operable from within such spaces for the protection of personnel.

2.5.14 Elevator's Alarm

Each elevator car is to be fitted with means to activate an alarm in a normally manned control station or with means of voice communication with that station.

Chapter 3

Generators

3.1 General

3.1.1 Generators are to comply with the relevant part of IEC Publication 60092, or an acceptable and relevant National Standard, and the requirements of this Chapter.

3.1.2 The rotating parts of machines are to be so balanced that when running at any speed in the normal working range the vibration does not exceed the levels of IEC 60034 Rotating electrical machines Part 14.

3.2 Prime Movers

3.2.1 Governors on prime movers driving generating sets are to be capable of maintaining the speed within the following limits:

(a) Momentary variations are to be 10% of the maximum rated speed when the rated load of the generator is suddenly thrown off.

(b) Momentary variations are to be 10% of the maximum rated speed when 50% of the rated load of the generator is suddenly thrown on followed by the remaining 50% load thrown on after an interval to restore the steady state. The speed is to return to within 1% of the final steady speed in no more than 5 seconds. When difficulty arises to meet the above requirements or when an installation requires different characteristics, this will be considered.

(c) At all loads between no load and rated load the permanent speed variation is not to be more than 5% of the maximum rated speed.

3.2.2 In turbine generators, an emergency overspeed device is to be arranged to trip the throttle valve when the speed exceeds the rated maximum running speed by not less than 10% nor more than 15%. A hand tripping device is also to be provided.

3.2.3 Where turbine driven D.C. generators are arranged to operate in parallel, a switch is to be fitted with the emergency overspeed device as mentioned in 3.2.2 above on each turbine to open the generator circuit breaker when the emergency overspeed device functions.

3.2.4 For A.C. generating sets operating in parallel, the governors on prime movers are to be such that the load sharing specified in 3.5.4 and 3.5.5 of this Part is ensured and facilities are to be provided to adjust the governor sufficient to permit a load adjustment, at normal frequency, within 5% of full load.

3.3 Generator Construction

3.3.1 Every generator is to be fitted with a name plate of corrosion resistant material clearly marked with the following items of information:

(a) Maker's name and serial number.

(b) Nature of current (D.C. or A.C.) and kind of rating (if the generator is designed for continuous rating it need not be mentioned).

(c) Rated output, voltage, current and speed.

(d) For D.C. generators – type of winding.

(e) For A.C. Generators – number of phases, rated frequency, power factor, exciting current and voltage.

(f) Temperature rise at rated load and design ambient temperature.

3.3.2 Insulating materials used in the construction of generators are to be at least of Class A insulation. When the weight of the generators excluding shaft is over 500 kg, it is to be provided with means to prevent moisture condensation in the machine when it is not running.

3.3.3 The lubrication arrangement for bearings are to be effective under all operating conditions including the maximum ship inclinations defined by 1.4 and there are to be effective means provided to ensure that lubricant does not reach the machine windings or other conductors and insulators.

3.3.4 Means are to be taken to prevent the ill effects of the flow of currents circulating between the shaft and machine bearings or bearings of connected machinery.

3.3.5 Every generator terminal is to be protected against accidental contact, mechanical damage and where necessary against dripping and moisture by the drip proof enclosure.

3.3.6 External frames, spiders and brackets are to be of rigid construction.
Where welding is applied to shafts of machines for securing arms or spiders, stress relieving is to be carried out after welding.

3.3.7 Brushes for commutator or slip rings are to be provided with flexible copper connections and are staggered longitudinally along commutators in such a manner that the whole surface of the commutators is swept by the brushes so that the formation of ridge will be prevented.

3.3.8 A provision is to be made for supplying the necessary amount of cool air and removing hot air, and to avoid as far as possible the admission of moisture or oil vapor. Where water cooling is used, the cooler is to be so arranged to avoid entry of water into the machine.

3.3.9 The diameter of the generator shaft in the length from the section where rotor is fixed to the shaft end of prime mover is not to be less than value obtained from the formula specified in 6.2 of Part IV.
H, N and F in the formula, however, mean as follows:
H = Output of generator at maximum continuous rating (kW).
N = Number of revolutions of generator shaft at maximum continuous rating (rpm).
F = Factor given in Table VII 3-1.

3.4 Direct Current Service Generators

3.4.1 Automatic voltage regulators are to be provided for shunt wound direct current generators.

3.4.2 Direct current generators used for charging batteries without series-regulating resistors are to be either:

(a) shunt wound, or

(b) compound wound with switches arranged so that the series winding can be switched out of service.

3.4.3 Where manual adjustment of terminal voltage is necessary for the satisfactory operation of generators the facilities are to be provided at the switchboard or at an appropriate control position.

3.4.4 For each direct current generator, coupled to its prime mover, at any temperature within the working range the means provided is to be capable of adjusting the voltage at any load between no load and full load to within:

(a) 0.5% of rated voltage for generators of rating exceeding 100 kW, and

(b) 1.0% of rated voltage for generators of rating not exceeding 100 kW.

3.4.5 The inherent regulation of the service generators is to be such that the following conditions are satisfied:

(a) For shunt or stabilized shunt wound generators when the voltage has been set at full load, the steady voltage at no load is not to exceed 115% of the full load value, and the voltage obtained at any intermediate value of load is not to exceed the no load value.

(b) For compound wound generators with the generator at full load operating temperature, and starting at 20% load with voltage within 1% of rated voltage, then at full load the voltage is to be within 1.5% of rated voltage. The average of the ascending and descending load/voltage curves between 20% load and full load is not to vary more than 3% from rated voltage.

Note: For compound-wound generators operated in parallel, the drop in voltage may be acceptable up to 4% of the rated voltage when the load is gradually increased from 20% load to full load.

(c) Three-wire generator

In addition to compliance with the requirements in (a) and (b), when operating at the rated current on the heavier loaded side, i.e., either positive or negative lead, with the rated voltage between the positive and negative leads and a current of 25% of the generator current rating in the neutral wire, the resulting difference in voltage between the positive and neutral leads or the negative and neutral leads is not to exceed 2% of the rated voltage between the positive and negative leads.

3.4.6 When D.C. generators are operated in parallel, the load on any generator is not to differ more than ±10% of its rated output of the largest machine from its proportionate share, based on the generator ratings, of the combined load, for any steady-state condition in the combined load between 20% and 100% of the sum of the rated outputs of all the machines. The starting point for the determination of the foregoing load distribution requirement is to be at 75% load with each generator carrying its proportionate share.

3.4.7 The series field winding of each two-wire compound-wound generator is to be connected to the negative terminal.

3.4.8 Equalizer connections are to be have a cross- sectional area appropriate to the system but in no case less than 50% of that of the negative connection from the generator to the switchboard.

3.5 Alternating Current Service Generators

3.5.1 Each alternating current service generator, unless of the self-regulating type, is to be provided with automatic means of voltage regulation.

3.5.2 The voltage regulation of any alternating current generator with its regulating equipment is to be such that at all loads from zero to full load the rated voltage at rated power factor is maintained under steady conditions within ±2.5%, except that for emergency generators the limits may be within ±3.5%.

3.5.3 Generators, and their excitation systems, when operating at rated speed and voltage on no-load are to be capable of absorbing the suddenly switched, balanced, current demand of the largest motor or a group of motors, but in any case, at least 60% of the rated current of the generator, at a power factor not greater than 0.4, and then switched off after attaining steady-state conditions, momentary voltage variations are to be within the range of -15% to +20% of the rated voltage, and the voltage is to be restored to within ±3% of the rated voltage in a period of not more than 1.5 seconds. However, in the case of emergency generators, such voltage values may be increased to ±4% in a period of not more than 5 seconds.

3.5.4 Generators required to run in parallel are to be stable from no load (kW) up to the total combined full load (kW) of the group, and load sharing is to be such that the load on any generator does not normally differ from its proportionate share of the total load by more than 15% of the rated output (kW) of the largest machine or 25% of the rated output (kW) of the individual machine whichever is the lesser.

3.5.5 When generators are operated in parallel, the reactive loads of the individual generating sets are not to differ from their proportionate share of the total reactive load by more than 10% of the rated reactive output of the largest machine, or 25% of the smallest machine, whichever is the lesser.

3.6 Exciters

3.6.1 Excitation current for ship's service and emergency generators is to be provided by attached rotating exciters or by static exciters deriving their source of power from the machine being excited.

3.6.2 If a propulsion system contains only one generator and one motor and cannot be connected to another propulsion system, more than one exciter set is to be provided for each machine. The current derived from the ship's service power or lighting set may be taken as one means of excitation. However, this is not necessary for self-excited generators or for multi-propeller propulsion ships where any additional exciter set may be common for the ship.

3.6.3 AC and DC rotating exciters are to conform to all applicable requirements for generators.

3.6.4 Arrangements for electric propulsion generators are to be such that propulsion can be maintained in case of failure of an excitation system or failure of a power supply for an excitation system. Propulsion may be at reduced power under such conditions where two or more propulsion generators are installed provided such reduced power is sufficient to provide for a speed of not less than 7 knots or $\frac{1}{2}$ of design speed whichever is the lesser.

3.7 Short Circuit Conditions

3.7.1 Service generators are to be capable of withstanding the mechanical and thermal effects of fault current for the duration of any time delay which may be fitted in a tripping device of discrimination purposes. They are to be capable of maintaining under steady-state short-circuit conditions a current of at least three times the full load rated current for a duration of 2 seconds or, where precise data is available, for the duration of any time delay which may be fitted in a tripping device for discrimination purposes.

3.8 Testing and Inspection

3.8.1 Temperature rise test

(a) The temperature rise of a generator of continuous rating is to be determined by a run at full load for a duration until a final steady temperature has been reached. The maximum permissible temperature rise of a generator is not to exceed the limit given in Table VII 3-2.

(b) Where the ambient temperature has been assured to be in excess of the standard ambient temperature the temperature rise is to be reduced according to 1.3.3 of this Part.

(c) The temperature rise test required by 3.8.1(a) for generators which are produced in series and identical to their type tested prototype unit may be omitted from the second unit onward subject to the Society's permission. The propulsion machines will be specially considered.

3.8.2 Insulation resistance test

Immediately after the high voltage tests, the insulation resistance of a generator is to be measured using a direct current insulation tester between:

(a) all current carrying parts connected together and earthed;

(b) all current carrying parts of different polarity or phase, where both ends of each polarity or phase are individually accessible.

The minimum values of test voltage and insulation resistance are given in the table below; the temperature at which the insulation resistance is measured is to be near the operating temperature, or an appropriate method of calculation may be used:

Rated Voltage Un(V)	Min. Test Voltage (V)	Min. Insulation Resistance (MΩ)
Un ≤ 250	2 × Un	1
250 < Un ≤ 1,000	500	1
1,000 < Un ≤ 7,200	1,000	(Un/1,000) + 1
7,200 < Un ≤ 15,000	5,000	(Un/1,000) + 1

3.8.3 High voltage test

(a) The dielectric strength of the insulation of a generator is to be tested by an A.C. voltage of practically sine wave form applied between the terminal and the frame of the machine which has been completely assembled in a state of normal working condition for a period of 1 minute. The winding which is not under test is to be connected to the ground.

(b) The standard testing voltage is to be as given in Table VII 3-3. The frequency of the testing voltage is to be 25 to 100 Hz.

(c) In case of a repaired generator the above high voltage test is to be carried out using a test voltage equal to 75% of the value specified in Table VII 3-3.

3.8.4 Generators are to comply with the requirements in 3.4.5 or 3.5.2 and 3.5.3 by conducting the voltage regulation test. The voltage regulation during transient conditions required by 3.5.3 may be based on calculation values subject to the Society's permission for each generators which are produced in series and are identical to their prototype unit which has been type tested.

3.8.5 Short circuit test

The short circuit tests of generators are to be carried out in accordance with 3.7. However, this short circuit test may be omitted subject to the Society's permission for each generators which are produced in series and are identical to their type tested prototype unit.

3.8.6 Other tests

(a) Overload test.

Generators are to withstand the following excess current tests by maintaining their voltage, revolutions, and frequency as near to their rated values as possible.

(i) A.C. generators : 150 % of rated current (not less than 30 seconds)

(ii) D.C. generators : 150 % of rated current (not less than 60 seconds)

(b) Overspeed test

(i) A.C. generators: 120 % of the rated speed for 2 minutes.

(ii) D.C. generators: 120 % of the rated speed for 2 minutes.

(c) The commutation of the generator is to be clear of any objectionable sparking when running from no load to full load. This examination is preferably to be carried out at the conclusion of the temperature rise test.

(d) Generators are to be operated at no load and rated speed while being supplied at rated voltage and frequency. During the running test, the vibration of the machine and operation of the bearing lubrication system, if appropriate, are to be checked.

Table VII 3-1
Values of F

Bearing arrangement of a generation	In case of generator driven by steam or gas turbine, generator driven by diesel engine through slip type coupling (See Note)	In case of generator driven by diesel engine other than those mentioned in the left-hand column
Where bearings are arranged at both sides of a generator	110	115
Where no bearing is arranged at prime mover side of a generator	120	125

Note: Slip type coupling signifies hydraulic coupling, electro-magnetic coupling or the equivalent.

Table VII 3-2
Limit of Temperature Rise for Generator and Motor (Based on ambient temperature 45°C)

Item No.		Parts of machine	Temperature measuring method	Limit of temperature rise °C for class of insulation				
				A	E	B	F	H
1	a)	A.C. windings of machines having rated output of 5,000kW (or kVA) or more	Resistance	55	-	75	95	120
			Embedded temp. detector	60	-	80	100	125
	b)	A.C. windings of machines having rated output above 200 kW (or kVA) but less than 5,000 kW (or kVA)	Resistance	55	70	75	100	120
			Embedded temp. detector	60	-	85	105	125
	c)	A.C. windings of machines having rated outputs of 200 kW (or kVA) or less(1)	Resistance	55	70	75	100	120
2		Windings of armatures having commutators	Thermometer	45	60	65	80	100
			Resistance	55	70	75	100	120
3		Field windings of A.C. and D.C. machines having D.C. excitatin, other than those in item 4	Thermometer	45	60	65	80	100
			Resistance	55	70	75	100	120
4	a)	Field winding of synchronous machines with cylindrical rotors having D.C. excitation winding embedded in slots, except synchronous induction motors	Resistance	-	-	85	105	130
	b)	Stationary field windings of A.C. machines having more than one layer	Thermometer	45	60	65	80	100
			Resistance	55	70	75	100	120
			Embedded temp. detector	-	-	85	105	130
	c)	Low resistance filed winding of A.C. and D.C. machines and compensating windings of D.C. machines having more than one layer	Thermometer	55	70	75	95	120
			Resistance	55	70	75	95	120
	d)	Single-layer windings of A.C. and D.C. machines with exposed bare or varnished metal surfaces and single layer compensating windings of D.C. machines(2)	Thermometer	60	75	85	105	130
			Resistance	60	75	85	105	130
5		Permanently short-circuited windings	The temperature rise of any parts is not to be detrimental to the insulating of that part or to any other part adjacent to it.					
6		Magnetic cores and all structural components, whether or not in direct contact with insulation (exculding bearings)						
7		Commutators, slip-rings and their brushes and brushing	The temperature rise of any parts is not to be detrimental to the insulating of that part or to any other part adjacent to it. Additionally, the temperature is not to exceed that at which the combination of brush grade and commutator/ slip-ring materials can handle the current over the entire operating range.					

Notes:

(1) With application of the superposition test method to windings of machines rated 200 kW (or kVA) or less with insulation classes A, E, B or F, the limits of temperature rise given for the resistance method may be increased by 5ºC.

(2) Also includes multiple layer windings provided that the under layers are each in contact with the circulating coolant.

Table VII 3-3
High Voltage Test for Generator and Motor

Item	Machine or part	Test voltage (rms) (V)
1	Insulated windings of rotating machines of size less than 1 kW (or kVA), and of rated voltage less than 100 V with the exception of those in items 3 to 6.	2 E + 500
2	Insulated windings of rotating machines with exception of those in items 1 and 3 to 6	2 E + 1,000 (Minimum 1,500)
3	Separately-excited field windings of d.c. machines	2 Ef + 1,000 (Minimum 1,500)
4	Field windings of synchronous generators, synchronous motors and synchronous condensers a) Ex≦500V 500V < Ex b) When intended to be started with the field winding short-circuited or connected across a resistance of value less than ten times the resistance of the winding c) When intended to be started with the field winding on open circuit or connected across a resistace of value equal to, or more than, ten times the resistance of the winding	 10 Ex (Minimum 1,500) 2 Ex + 4,000 10 Ex (Minimum 1,500, Maximum 3,500) 2 Ey + 1,000 (Minimum 1,500)
5	Secondary (usually rotor) windings of induction motors or synchronous induction motors if not permanently short-circuited (e.g. if intended for the rheostatic starting) a) For non-reversing motors or motors reversible from standstill only b) For motors to be reversed or braked by reversing the primary supply while the motor is running	 2 Es + 1,000 4 Es + 1,000
6	Exciters with the exception of : Exciters of synchronous motors (including synchronous induction motors) if connected to earth or disconnected from the field windings during starting; and Separately excited field windings of exciters	 2 Ei + 1,000 (Minimum 1,500)

Notes:

(1) E : Rated volatge

Ef : Maximum rated voltage in field circuit

Ex : Rated filed voltage

Ey : Induced terminal voltage between the terminals of field windings and starting rotor windings when applied the staring voltage to armature winding while the rotor is standstill and terminal voltage in such condition that the field windings or staring windings are started by connecting with the resistance

Es : Induced voltage between the terminals of secondary windings when the machine is at a standstill

Ei : Rated exciter voltage

(2) For two-phase windings having one terminal in common, the voltage in the formula is to be the highest r.m.s. voltage arising between any two terminals during operation.

(3) High voltage tests on machines having graded insulation may be as deemed appropriate by the Society.

(4) For the semiconductor rectifier of exciters, the requirements for semiconductor equipment of Chapter 15 are to be applied.

Chapter 4

Motors

4.1 General

4.1.1 The requirements for the design, construction, materials, insulation, and lubrication of motors intended for essential services are the same as those for generators as specified in 3.1 and 3.3 of this Part except the means is to be provided for propulsion motors to prevent moisture condensation when motors are idle for appreciable periods. See 3.3.2 of this Part.

4.1.2 Motors for essential service when installed with their rotor shafts not in fore and aft direction, the lubrication will require special consideration.

4.1.3 All propulsion and essential service motors are to be of continuous rating except those for deck machinery which may be of non-continuous rating.

4.1.4 The standard application for types of enclosures of motors is to be in accordance with 1.11 of this Part.

4.1.5 Motors of 75 kW and above, intended for essential services, are to be tested and surveyed by the Surveyor during manufacture in accordance with the requirement of 4.2 of this part.

4.1.6 Motors below 75 kW, intended for essential services, are to be tested by the manufacturer in accordance with 4.2 of this Part. The test reports are to be made available when requested by the Surveyor. Acceptance of machines will be based on satisfactory performance after installation.

4.2 Testing and Inspection

4.2.1 Temperature rise test

The temperature rise of a motor of continuous rating is to be in accordance with the requirements for generator in 3.8.1 of this Part and the maximum permissible temperature rise is not to exceed those given in Table VII 3-2.

4.2.2 Insulation resistance test

The insulation resistance for motors is to be in accordance with the requirements set forth in 3.8.2 of this Part.

4.2.3 High voltage test

The dielectric strength of the insulation of motors is to be tested in accordance with the requirements set forth in 3.8.3 of this Part.

4.2.4 Other tests

(a) Excess torque tests

Motors, whatever their duty and construction, shall be capable of withstanding the following excess torque tests without either stalling or exhibiting an abrupt change of speed (under gradual increase of torque). The voltage and frequency (for induction motors) shall be maintained at their rated values.

(i) D.C. motors: 160 % of rated torque for 15 seconds

(ii) Polyphase induction motors: 160 % of rated torque for 15 seconds

(iii) Polyphase synchronous motors:

(1) Synchronous (wound rotor) induction motors: 135 % of rated torque for 15 seconds

(2) Synchronous (cylindrical rotor) motors: 135 % of rated torque for 15 seconds

(3) Synchronous (salient pole) motors: 150 % of rated torque for 15 seconds

(b) Motors of non-continuous ratings or special types, the excess torque test is to be specially considered.

(c) The excess torque test for propulsion motors is to be specially considered for each installation.

(d) The commutation of motors is to be clear of any objectionable sparking when running under all conditions of load and field adjustment.

(e) Overspeed tests

Motors are to be capable of withstanding overspeed conditions for 2 minutes according to the following requirements:

(i) A.C. motors: 120 % of the rated speed.

(ii) D.C. motors:

(1) Shunt-wound and separately excited motors:
120 % of the highest rated speed or 115% of the corresponding no-load speed, whichever is greater

(2) Compound-wounded motors having speed regulation of 35% or less:
120 % of the highest rated speed or 115% of the corresponding no-load speed, whichever is greater, but not exceeding 150% of the highest rated speed

(3) Compound-wounded motors having speed regulation greater than 35% and series-wounded motors:
110 % of the maximum safe speed designated by the manufacturer

(4) Permanent-magnet excited motors:
In the case of series winding, (2) or (3) above is to be satisfied. In all other cases, (1) above is to be satisfied.

(f) No load test

No load test of motors is to be carried out in accordance with 3.8.6(d).

Chapter 5
Switchboards and Mounted Equipment

5.1 General

5.1.1 The switchboard is to be placed in an accessible and well-ventilated position, free from inflammable gas, acid fume, and not exposed to mechanical injury or damage from water, steam or oil. Unobstructed clearance for operation and ample space to permit maintenance are to be maintained.

5.1.2 Where necessary, the space at the rear of switchboards is to be ample to permit maintenance and in general not less than 0.6 m except that this may be reduced to 0.5 m in way of stiffeners or frames.

5.1.3 The arrangement of the main system of supply is to be such that a fire or other casualty in spaces containing the main source of power, associated transforming equipment, if any, the main switchboard and the main lighting switchboard will not render the emergency services inoperative.

5.1.4 The arrangement of the emergency system of supply is to be such that a fire or other casualty in spaces containing the emergency source of power, associated transforming equipment, if any, the emergency switchboard and the emergency lighting switchboard, will not render the essential services inoperative.

5.1.5 The main switchboard is to be so placed relative to the main source of power that, as far as is practicable, the integrity of the main system of supply will be affected only by a fire or other casualty in one space.

5.1.6 The sides and the rear of the switchboard are to be suitably guarded or screened, and the front is to be fitted with insulating handrails. Non-conducting mats or gratings are to be provided at the front and the rear of switchboards where operations or maintenance are expected to protect the personnel from contacting the live part to the ground.

5.1.7 The dead front type switchboard is to be used where the voltage to ground or between poles is in excess of 50V, D.C. or 50V, AC. root mean square.

5.1.8 Earth detection for insulated systems

(a) A device is to be installed to continuously monitor the insulation level to earth and to operate an alarm in the event of an abnormally low level of insulation.

(b) Such a device is required for every insulated distribution system, whether primary or secondary, for power, heating or lighting circuits.

5.2 Construction

5.2.1 Enclosures and assemblies of a switchboard are to be constructed of steel or other suitable incombustible, moisture-resistant materials and reinforced as necessary to withstand the mechanical, electro-magnetic and thermal stresses which may be encountered under both normal and short-circuit fault conditions. Enclosures are to be of the closed type. The degree of the protection is to be in accordance with 1.11 of this Part. All wearing parts are to be accessible for inspection and be readily renewable.

5.2.2 Cable entries of a switchboard are to be so constructed that no ingress of water into the switchboard is permitted along the cables.

5.2.3 Every live part is to be suitably spaced or shielded with non-ignitable insulating material that any arc cannot be maintained between the working parts or between such parts and earth.

5.2.4 The apparatus, measuring instruments, circuit breakers, switches and operating handles are each to be provided with a name plate bearing a clear indelible indication for identification. The rating of the fuse, current rating

of the circuit breaker and the cross sectional area of the cables which these devices protected are also to be marked on labels placed in suitable positions.

5.2.5 Where the main source of electrical power is necessary for propulsion of the ship, the main busbar is to be subdivided into at least two parts which are normally to be connected by circuit breakers or other approved means; so far as are practicable, the connection of generating sets and other duplicated equipment is to be equally divided between the parts.

5.2.6 Section and distribution boards are to be suitably enclosed unless they are installed in a cupboard or compartment to which only authorized persons have access, in which case the cupboard may serve as an enclosure.

5.2.7 All enclosures are to be constructed of, or lined with, non-flammable and non-hygroscopic material, and are to be of robust construction.

5.3 Bus Bars

5.3.1 Bus bars and their connections are to be made of copper and provided with anti-corrosion and oxidization surfaced contact. All joints are to be provided with locking devices to prevent loosening due to vibration.

5.3.2 The cross section of bus bars is to be such that the maximum permissible temperature rise of 45°C as measured by the thermometer is not to be exceeded when carrying full load current.

5.3.3 A clearance is to be maintained between the bare metal part and the bus bar according to Table VII 1-1.

5.3.4 The current rating of equalizer connections and equalizer switches is to be not less than half the rated full load current of the generator. The current rating of equalizer busbars is to be not less than half the rated full load current of the largest generator in the group.

5.3.5 Busbars and busbar connections are to be so supported as to withstand the electromagnetic force resulted from short-circuiting.

5.4 Switchboard Wiring and Circuit Arrangement

5.4.1 Wiring

(a) All the wiring on the switchboard for the voltmeter, wattmeter, voltage coil, synchroscope, pilot lamp (if any) and earth lamp is to be protected by a fuse on each insulated pole.

(b) The instrument and the control wiring are to be of the stranded type, heat-resisting and flame retarding insulation. Wiring from the hinged panel is to be of extra flexible type. The secondary winding of instrument transformers is to be earthed.

(c) Ducts and straps for wiring are to be of flame-retardant materials.

(d) Insulated wires for control and instrument circuits are not to be bunched together with wires for main circuits and not to be in the same duct. However, if the rated voltages and maximum permissible temperatures of conductors are the same each other and no injurious effects are imposed by the main circuits, this requirement may not be applied.

5.4.2 Fuses, except those for instruments and control circuit, are to be mounted on or be accessible from the front of the switchboard.

5.4.3 Switches, circuit breakers and contactors are, whenever practicable to be so connected that their blades or moving parts are not alive in the off or de-energized position.

5.4.4 The switch and fuse fitted on the same pole are to be so arranged that the fuse is not alive when the corresponding switch is in the off position.

5.4.5 Metal frames, metal cases of instruments and the secondary winding of instrument transformers of switchboards are to be effectively earthed.

5.4.6 Where rheostats or other devices that may operate at high temperature are amounted on the switchboard, they are to be naturally ventilated, isolated by barriers or separately mounted from the switchboard as necessary in order to prevent excessive temperature of adjacent device.

5.5 Circuit-Breakers and Electromagnetic Contactors

5.5.1 Circuit-breakers are to comply with IEC Publication 60947-1 and 60947-2, or equivalent thereto, amended when necessary for ambient temperature, and also to comply with the requirements in (a) and (b).

(a) The construction of circuit-breakers is to comply with the following:

(i) All circuit-breakers are to be of trip-free type and depending upon the field of their application, the trip attachments are to have a time-delay or an instantaneous overcurrent trip feature or both of them.

(ii) The main contacts of the circuit-breakers are to be such as to have no undue burning or pitting. Arcing contacts except those of the moulded case circuit-breakers are to be readily renewable.

(iii) Instantaneous trip devices other than those of electronic type having suitable testing arrangements are to be of a construction capable of tripping the associated breaker directly by short-circuit current.

(iv) Circuit-breakers are to be such that no accidental opening and closing occur due to the vibration of a ship, and furthermore, no malfunction is caused by the list of an angle of 30° in any direction.

(v) The fused circuit-breakers of moulded-case type are to be so constructed that single phasing does not occur in the event of blowing of fuses and that the fuses can be readily replaced without the risk of accidental touch for the operating personnel to their live-parts.

(vi) On each circuit-breaker the rated (operational) voltage and rated (thermal) current, and in addition rated breaking capacity, rated making current and rated short-time current are to be clearly indicated according to its kind. Each time-delay overcurrent trip device is to be indicated of its operating characteristics, except the moulded-case circuit-breakers.

(b) Performance of circuit-breakers is to comply with the following:

(i) The temperature rise in the connecting terminals of cables is not to exceed 45°C at an ambient temperature of 45°C when 100% of the rated current is carried therethrough.

(ii) All circuit-breakers are, according to their kind, to be such as to be able to securely break the over-current not more than the rated breaking capacity and safely make the circuit to carry the current not more than the rated making current under the circuit conditions specified in the standards referred to in 5.5.1.

(iii) The time-delay over-current trip devices of circuit-breakers for generator circuits are to be such that the readjustment of the current setting does not cause remarkable change to the time-delay feature.

(iv) The characteristics of the time-delay overcurrent trip devices are not to be affected excessively by ambient temperature.

5.5.2 Circuit-breakers of moulded-case type are to be mounted or arranged in such a manner that the breakers may be removed from the front without disconnecting conductors or de-energizing the supply to the breakers.

5.5.3 Electromagnetic contactors are to comply with IEC publication 60947-1 and 60947-4, or equivalent thereto, amended when necessary for ambient temperature, and also to comply with the requirements in (a) and (b).

(a) The construction of electromagnetic contactors is to comply with the following:

(i) Electromagnetic contactors are to be such that no accidental opening and closing occur due to the vibration of the ship, and furthermore, no malfunction is caused by the list of an angle of 30° in any direction.

(ii) The contact pieces and magnetic coils are to be readily replaceable.

(iii) Each electromagnetic contactor is to be clearly indicated of its rated operational voltage, rated capacity or full load current corresponding to rated capacity, rated operational voltage and frequency for control circuits, interruption current capacity and closed circuit current capacity. Such indication may be made in terms of value or symbol.

(b) The performance of electromagnetic contactors is to comply with the following:

(i) The temperature rise in the connecting terminals of cables is not to exceed 45°C at an ambient temperature of 45°C when the full load current corresponding to the rated capacity is carried therethrough.

(ii) Electromagnetic contactors are to have a suitable interruption current capacity and closed-circuit current capacity depending on their application.

(iii) Electromagnetic contactors are not to accidentally open the circuit at a voltage exceeding 85% of the rated voltage.

5.6 Fuses

5.6.1 Fuses are to comply with IEC Publication 60269 or equivalent thereto, amended when necessary for ambient temperature, and also to comply with the requirements in (a) and (b).

(a) The construction of fuses is to comply with the following:

(i) Fuses are to be of enclosed type and the construction is to be such that its enclosure is not broken nor burnt and the adjacent insulation is not deteriorated by flowing current of fused metal or emitting of gases, when the fuse element has blown out.

(ii) Fuses are to be readily replaceable with spares without the risk of causing electric shock or burn on setting fuses in and out.

(iii) Each fuse is to be clearly indicated of its rated voltage and rated current, and in addition rated breaking capacity, fusing characteristics and current-limiting characteristics according to its kind. Such indication may be made in terms of value or symbol.

(b) The performance of fuses and fuse-holders is to comply with the following:

(i) The temperature rise in the connecting terminals of cables is not to exceed 45°C at an ambient temperature of 45°C when the fuses and fuse-holders have been fitted to the normal working condition and 100% of the rated current is carried therethrough.

(ii) Fuses are to have the fusing characteristics corresponding to their kind, and under the circuit conditions specified in the standards referred to in (a), they are to be capable of breaking securely all currents whichever are below the rated breaking capacity and above the fusing current.

5.7 Instruments

5.7.1 The limit of the scale of every voltmeter is to be approximately 120% of the normal voltage of the circuit.

5.7.2 The limit of the scale of every ammeter is to be approximately 130% of the current rating of the circuit in which the ammeter is connected. Ammeters for use with D.C. generators or wattmeters for use with A.C. generators which may operate in parallel are to be capable of indicating a reverse current or power of at least 15% of the rated full load current or power of the generator respectively.

5.7.3 The minimum number of instruments to be provided for every main or emergency switchboard is to be as follows:

(a) 2-wire D.C. system:

(i) For each generator not arranged for paralleloperation:

1 ammeter, and

1 voltmeter.

(ii) For generators arranged for parallel operation:

1 ammeter for each generator, and

1 voltmeter for each generator with voltmeter switch to enable it to indicate generator voltage, bus voltage. One of these voltmeter switches is to indicate shore connection voltage.

(b) 3-wire D.C. system:

(i) For each generator not arranged for parallel operation:

2 ammeters for each generator, 1 in positive and 1 in negative line, and

1 voltmeter provided with switch for connecting the voltmeter to indicate generator voltage positive to negative, positive to neutral and neutral to negative.

(ii) For generators arranged for parallel operation:

2 ammeters per generator, and

1 voltmeter for each generator with switch for connecting the voltmeter to indicate generator voltage, positive to negative, positive to neutral and neutral to negative, and bus voltage positive to negative. One of these voltmeter switches is to indicate shore connection voltage, positive to negative, positive to neutral, and neutral to negative.

(c) 3-phase A.C. system:

(i) For each generator not arranged for parallel operation:

1 voltmeter for each generator with switch to indicate voltage between phases,

1 ammeter provided with selector switch to indicate the current of each phase,

1 frequency meter provided with selector switch to indicate the frequency of any generator, and

1 wattmeter for each generator (it may be omitted for 50 kVA or less).

(ii) For generators arranged for parallel operation:

1 voltmeter for each generator with a selector switch to indicate the voltage of each phase of the generator and one phase of the bus. One of these voltmeter switches is to indicate voltage of shore connection,

1 ammeter for each generator provided with a selector switch to indicate the current of each phase,

1 indicating wattmeter for each generator,

1 synchroscope and synchronizing lamp provided with selector switch of synchroscope for paralleling in any combination when more than 2 generators are installed,

2 frequency meters provided with selector switch to indicate the frequency of any generator and bus bar, and

1 ammeter for exciter per generator, if necessary.

5.8 Testing and Inspection

5.8.1 The temperature rise of the switchboard equipment and bus bars under rated current, rated voltage and rated duty operation is to be ascertained that they are not to exceed the values as specified in Table VII 5-1 and 5.3.2 of this Part. However, the temperature rise test for switchboards which are produced in series and identical to their type tested prototype unit may be omitted from the second unit onwards subject to the Society's permission. The propulsion machines will be specially considered.

5.8.2 The dielectric strength of switchboards is to be tested by continuous application of 50 or 60 Hertz alternating sine wave e.m.f. between all current carrying parts and earthed frame, and between current carrying parts of opposite polarity or phase according to the requirements as shown in Table VII 5-2.

5.8.3 Immediately after completion of the high voltage test, the insulation resistance of switchboards between current carrying parts of each polarity and earth, and between current carrying parts of opposite polarity or phase is to be not less than 1 megohm when tested with D.C. voltage of approximately 500 V tester. The test may be made with circuit breakers and switches connected to the outgoing circuit in open position and the fuse link for the pilot lamp,

earth lamp, voltmeter, etc. removed. Voltage coils normally connected to bus bars may be temporarily disconnected while the test between poles is being made.

5.8.4 Functions of instruments, circuit-breakers, switchgears, etc. on switchboards are to be confirmed normal.

Table VII 5-1
Limits of Temperature Rise of Electrical Appliances for Switchboard
(Based on ambient temperature 45°C)

Items and part			Limit of temperature rise (°C)
Coils	Class A insulation		45
	Class E insulation		60
	Class B insulation		75
	Class F insulation		95
	Class H insulation		120
Contact pieces	Mass form	Copper or Copper alloys	40
		Silver or Silver alloys	70
	Multilayer form	Copper or Copper alloys	25
	Knife form	Copper or Copper alloys	25
Terminals for external cables			45
Metallic resistors	Moulded-case types		245
	Those other than Moulded-case type	For continuous service	295
		For intermittent service	345
	Exhaust (approx. 25 mm above the exhaust ports)		170

Table VII 5-2
High Voltage Test of Switchboards

Rated voltage (V)	Testing voltage (V)	Testing period (s)
Un ≤ 12	250	60
12 < Un ≤ 60	500	
60 < Un ≤ 300	2,000	
300 < Un ≤ 690	2,500	
690 < Un ≤ 800	3,000	
800 < Un ≤ 1,000	3,500	
1,000 < Un ≤ 1,500 (DC only)	3,500	

Chapter 6

Batteries

6.1 General Construction and Arrangement

6.1.1 The requirements of this chapter are applicable to batteries which emit hydrogen while in use. Design, installation method, operational hazards of other types of batteries are to be submitted for consideration. Batteries used for power, lighting or internal communication are to be so constructed as to prevent spilling of the electrolyte due to the motion of the ship to the surrounding objects and to be installed permanently in adequately ventilated spaces not subjected to the extremes of temperature.

6.1.2 Batteries are not to be placed in sleeping quarters.

6.1.3 Lead type batteries and alkaline type batteries are not to be placed in the same compartment.

6.1.4 Batteries connected to a charging device with a power output of more than 2 kW, calculated from maximum obtainable charging current and the nominal voltage of the battery, are to be installed in a compartment assigned to them only, or in an adequately ventilated suitable box on open deck.

6.1.5 Batteries connected to a charging device with a power output within the range 0.2 kW to 2 kW, calculated from maximum obtainable charging current and the nominal voltage of the battery, are to be installed in locations in accordance with 6.1.4 or, alternatively, within a well ventilated machinery , or similar space.

6.1.6 Batteries connected to a charging device with a power output of less than 0.2 kW, calculated from maximum obtainable charging current and the nominal voltage of the battery, are to be installed in locations in accordance with 6.1.4 and 6.1.5 or, alternately, in open position or in a battery box in any suitable space.

6.1.7 Engine starting batteries are to be located as close as practicable to the engine(s) served. If such batteries cannot be accommodated in the battery compartment, they are to be installed so that adequate ventilation is ensured.

6.1.8 Battery compartments are to be ventilated by an independent ventilating system.

6.1.9 Natural ventilation may be employed if ducts can be run directly from the top of the compartment to the open air with no part of the duct more than 45° from the vertical. If natural ventilation is impracticable, mechanical ventilation is to be provided. Interior surfaces of ducts and fans are to be painted with corrosion-resistant paint. Fan motors are not to be located in the air stream. Ventilating fans are to be so constructed and to be of such a material as to render sparking impossible in the event of the impeller touching the fan casing.

6.1.10 Every battery is to be so arranged that each cell is readily accessible for replacing, inspection, testing, replenishing and cleaning.

6.1.11 Switches, fuses and other electrical equipment liable to cause an arc are not normally be installed in battery compartments. Where such equipment is necessary for operational reasons, the equipment is to be certified for group IIC gases and temperature Class T1 in accordance with IEC Publication 60079: Electrical apparatus for explosive gas atmospheres, or an acceptable and relevant National Standard.

6.1.12 The exposed metal in the space or compartment used for the storage of batteries such as shelf, vent fan and duct (if used) is to be protected with corrosion resistance paint. The deck, shelf, locker or box where acid batteries are placed is to have a watertight lining of lead sheet of 1.6 mm thick and not less than 100 mm deep at all sides. For alkaline batteries the shelf is to be similarly lined with steel, not less than 0.8 mm thick.

6.1.13 Maintenance of batteries

Where batteries are intended for essential, emergency, transitional sources of power specifies in Chapter 11, a maintenance schedule of these batteries is to be provided and maintained. The shipbuilder or manufacturer is to submit the maintenance schedule before work commences. The schedule is to contain information as follows:

(a) Type and manufacturer's type designation

(b) Voltage and ampere-hour rating

(c) Location

(d) Maintenance procedure

(e) Maintenance/replacement cycle date

(f) Date(s) of last maintenance and/or replacement

(g) Equipment and/or system(s) served

(h) For replacement batterries in storage, the date of manufacture and shelf life

Note: Shelf life is the duration of storage under specified conditions at the end of which a battery retains the ability to give a specified performance

6.1.14 Procedures of battery maintenance are to put in place to ensure that, where batteries are replaced, they are of an equipvalent performance type. Details of the schedule and of the procedures are to be included in the ship's safety management system and to be integrated into the ship's operational maintenance routine, as appropriate, which are to be verified by the Surveyor.

6.1.15 For ships installed with lithium-ion batteries, see the requirements in CR Guidelines for Lithium-ion Batteries Applied to Marine System/Equipment.

6.2 Battery Charging and Discharging Facilities

6.2.1 Battery charging and discharging facilities intended for essential, emergency, transitional sources of power specifies in Chapter 11, are to comply with the requirement of this chapter.

6.2.2 Suitable means, including ammeters and voltmeters, are to be provided for controlling the current with which batteries are to be charged and to protect against accidental discharge into the charging circuit. Fuses may be used for the protection of emergency lighting batteries instead of circuit breakers up to and including 400 A rating.

6.2.3 Where a battery is connected for floating service or where it is used for supplying power whilst it is being charged, the maximum battery voltage is not to exceed the permissible voltage of any of the connected appliances.

6.2.4 Where a low-voltage battery is connected for floating service, all connected apparatus are to be capable of withstanding the line voltage to earth and a device is to be provided for preventing excessively high voltages in the battery circuit.

6.2.5 The charging equipment, except rectifiers, for all batteries with a voltage more than 20% of the line voltage is to provide automatic protection against reversal of current.

6.2.6 The charging equipment is to be such that a completely discharged battery can be completely charged within 10 hours unless a shorter time is necessary. The maximum permissible current must not be exceeded during charging.

6.3 Testing and Inspection

6.3.1 High voltage test

The dielectric strength of the insulation of the battery charging and discharging facilities is to be in accordance with the requirements set forth in 5.8.2.

6.3.2 Insulation resistance test

The insulation resistance of the battery charging and discharging facilities is to be in accordance with the requirements set forth in 5.8.3.

6.3.3 Temperature rise test

The temperature rise test of the battery charging and discharging facility to be carried out in accordance with the requirements set forth in 5.8.1.

6.3.4 Operational test

The functions of the battery charging and discharging facilities are to be carried out but not limited to the testing of protective devices, current and voltage regulation, quick charge, slow charge, float charge, equalize charge, alarms, and earth lamps.

Chapter 7
Transformers

7.1 General

7.1.1 The requirements of this Chapter are normally applicable to marine use transformers having a rated output of 1 kVA or more for single phase and 5 kVA or more for 3-phase.

7.1.2 Transformers, unless otherwise approved, are to be rated at their continuous maximum rating expressed as the kVA output on non-inductive load when carrying rated current on the output side with rated voltage applied on the input side.

7.1.3 Where transformers are an essential part of the propulsion or ship's service supply system, the system is to be arranged to ensure at least the same continuity of supply as required in 11.2.1. Each required transformer is to be located as a separate unit with separate enclosure or equivalent, and is to be served by separate circuits on the primary and secondary sides. Each of the secondary circuits is to be provided with a multi-pole isolating switch. A circuit-breaker provided in the secondary circuit will be acceptable in lieu of multi-pole isolating switch.

7.2 Construction

7.2.1 Transformers are normally to be of the dry, naturally air-cooled type. When a forced air or liquid cooling system is used, an alarm is to be activated in the event of its failure.

7.2.2 Transformers except those for motor starting are to be double wound (two separate windings).

7.2.3 Liquid-cooled transformers may be used provided that:

- the liquid is non-toxic and of a type which does not readily support combustion
- the construction is such that the liquid is not spilled in inclined position
- temperature and pressure relief devices with an alarm are installed
- drip trays or other suitable arrangements for collecting the liquid from leakages are provided
- a liquid gauge indicating the normal liquid level range is fitted.

7.3 Voltage Regulation

7.3.1 The secondary terminal voltage difference between no load and the rated current with a unity power factor, expressed as a percentage of the no load secondary voltage, is not to exceed the following values:

For less than 5 kVA per phase	5%
For 5 kVA and over per phase	2.5%

7.4 Testing and Inspection

7.4.1 Every transformer while in service is to be capable of withstanding short circuit without injury at normal working voltage for the time period given in Table VII 7-2. Transformers having an impedance voltage less than 4% are to be capable of withstanding, under service condition, 25 times normal full load current for 2 seconds. These are to be conducted as a type test.

7.4.2 The maximum permissible temperature rise at the continuous maximum rating is not to exceed the limit given in Table VII 7-1. The reference ambient temperature is based on temperature of cooling fluid equal to 45°C for air.

However, the temperature rise test required for transformers which are produced in series and identical to their type tested prototype unit may be omitted from the second unit onward subject to the Society's permission.

7.4.3 The voltage regulation test is to be carried out in accordance with 7.3. However, it may be permissible to obtain such information from calculations.

7.4.4 The high voltage test is to be carried out immediately after the temperature rise test, by the continuous application for 1 minute of alternating voltage specified in Table VII 7-3 and under the frequency of 50 to 60 Hz.

(a) The test voltage as given in Table VII 7-3 is to be applied between the primary winding under test and the secondary winding and core all connected to earth.

(b) The test voltage as given in Table VII 7-3 is to be applied between the secondary winding under test and the primary winding and core all connected to earth.

7.4.5 The insulation resistance of a new, clean dry transformer shall be measured immediately after the temperature rise test, when such is required, and the high voltage test has been carried out. Test voltage and minimum insulation resistance is given in Table VII 7-4. The test shall be carried out between:

(a) all current carrying parts, connected together, and earth

(b) all current carrying parts of different polarity or phase, where both ends of each polarity or phase are individually accessible.

7.4.6 A test voltage is to be applied to a winding of a transformer at approximately twice the rated frequency for a duration of 60 seconds to induce voltage to a magnitude twice of the normal working voltage of the winding not connected to the exciting source. When the test frequency exceeds twice the rated frequency the duration of the test is to be equal to

$$60 \times \frac{2 \times \text{Rated frequency}}{\text{Test frequency}} \quad \text{seconds}$$

but in no case the duration of the test is to be less than 15 seconds.

7.4.7 In the case of repaired transformer the above dielectric and induced high voltage tests are to be carried out using test voltage equal to 75% of 7.5.2 and 7.5.3 above.

Table VII 7-1
Limit of Temperature Rise for Transformer (Based on ambient temperature 45°C)

Part	Cooling system of transformer	Limit of temperature rise (°C)					
		Measured by	Class A Insulation	Class B Insulation	Class E Insulation	Class F Insulation	Class H Insulation
Windings	Dry natural cooling or dry air blast	Resistance Method	55	75	70	95	120
	Oil immersed	Resistance Method	60	–	–	–	–
Oil	–	Thermometer	45				
Core	–	The temperature rise when measured by thermometer on the external surface of the core is not to exceed that permitted for the adjacent insulation.					

Table VII 7-2
Time Period of Short Circuit

Impedance voltage (%)	Time period of short circuit (s)
4	2
5	3
6	4
7 and above	5

Table VII 7-3
High Voltage Test

Rated voltage (V)	Test voltage (V)
up to 250	1,500
over 250	1,000 + 2 × maximum voltage between lines

Table VII 7-4
Insulation Resistance Test

Rated voltage Un(V)	Min. test voltage (V)	Min. insulation resistance (MΩ)
Un ≤ 250	2 × Un	1
250 < Un ≤ 1,000	500	1
1,000 < Un ≤ 7,200	1,000	(Un/1,000) + 1
7,200<Un≤15,000	5,000	(Un/1,000) + 1

Chapter 8
Cables

8.1 General

8.1.1 Cables are to comply with IEC Publication 60092 or equivalent thereto. Installation of cables is to comply with the requirements in this Chapter.

8.1.2 The rated voltage of any cable is not be lower than the nominal voltage of the circuit for which it is used.

8.1.3 Separate cables are, as a rule, to be used for a power supply circuit requiring individual short-circuit and overcurrent protection.

8.2 Cable Applications

8.2.1 The maximum rated conductor temperature of the insulating material for normal operation is to be at least 10°C higher than the maximum ambient temperature liable to be produced in the space where the cable is installed.

8.2.2 The application of insulating materials for cables is to be in accordance with Table VII 8-1.

8.2.3 Cable are to be protected by sheath and/or armour in accordance with the following requirements:

(a) Cables fitted up on weather decks, in bath room, in cargo holds, in machinery spaces or in any other location where water condensation or oil vapor may be present, are to have a metallic sheath or an impervious sheath (polyvinylchloride compound or polychloroprene compound).

(b) In permanently wet situations, metallic sheaths are to be used for cables with hygroscopic insulation.

(c) Cables are to be armoured except cables fitted up in living quarters or in any other location where they are not exposed to risk of mechanical injury.

8.2.4 All electric cables and wiring external to equipment are to be at least of a flame retardant type and are to be so installed as not to impair their original flame retarding properties. Where necessary for particular applications the Society may permit the use of special types of cables such as radio frequency cables, which do not comply with the foregoing.

8.3 Current Rating of Cables

8.3.1 The diversity factor of the individual loads may be taken into account in estimating the maximum continuous load.

8.3.2 The voltage drop from main or emergency switchboard busbars to any current under normal conditions of service, is not to exceed 6% of the nominal voltage. For supplies from batteries with a voltage not exceeding 55 volts, these figures may be increased to 10%. For navigation lights and radio apparatus, lower voltage drops are to be considered.

8.3.3 In assessing the current rating of lighting circuits, every lampholder is to be assessed at the maximum load likely to be connected to it, with a minimum of 60 watts, unless the fitting is so constructed as to take only a lamp rated at less than 60 watts.

8.3.4 Where motors used for cargo winches, windlasses and capstans are for short time duty, the current rating of the cables may be allowed to increase according to their duty.

8.3.5 Current ratings of cables for continuous services are not to exceed the values given in Table VII 8-2.

8.3.6 Where more than six electric cables, which may be expected to operate simultaneously at their full rated capacity, are laid close together in a cable bunch in such a way that there is an absence of free air circulation around them, a correction factor of 0.85 is to be applied. Signal cables may be exempted from this requirement.

8.3.7 The current ratings of Table VII 8-2 are based on an ambient temperature of 45°C. For other values of ambient temperature the correction factors shown in Table VII 8-3 are to be applied.

8.3.8 Current ratings of cables for short-time services and intermittent services are to be corrected as follows:

(a) The current rating of cables for short-time services (30 minutes or 60 minutes) may be increased by multiplying the value given in Table VII 8-2 by the following correction factor.

$$\text{correction factor} = \sqrt{\frac{1.12}{1 - e^{-\frac{t_s}{T}}}}$$

where:

t_s = 30 or 60 (min).

T = $0.245d^{1.35}$ where d is the overall diameter of the cable, in mm.

(b) The current rating of cables for intermittent services (for periods of 10 minutes, of which 4 minutes are with a constant load and 6 minutes without load) may be increased by multiplying the value given in Table VII 8-2 by the following correction factor.

$$\text{correction factor} = \sqrt{\frac{1 - e^{-\frac{10}{T}}}{1 - e^{-\frac{4}{T}}}}$$

where:

T = $0.245d^{1.35}$ where d is the overall diameter of the cable, in mm.

(c) The current rating for other intermittent ratings is to be deemed appropriate by the Society.

8.3.9 The cross sectional area of the conductors is to be sufficient to ensure that, under short circuit conditions, the maximum rated conductor temperature for short circuit operation is not exceeded, taking into consideration the time current characteristics of the circuit protective device and the peak value of the prospective short circuit current.

8.3.10 Where cables are used to supply two or more final sub-circuits account may be taken of any diversity factors which may apply (see 2.1.4).

8.4 Installation of Cables

8.4.1 Cables and wiring are to be installed and supported in such a manner as to avoid chafing or other damage. Cable runs are to be, as far as possible, straight and accessible.

8.4.2 The installation of cables across expansion joints in the ship's structure is to be, as far as possible, avoided. Where such installation is unavoidable, a loop of cable of length proportional to the expansion of the joint is to be provided. The internal radius of the loop is to be at least 12 times the external diameter of the cable.

8.4.3 Electric cables are to be as far as practicable installed remote from sources of heat. Where installation of cables near sources of heat cannot be avoided and where there is consequently a risk of damage to the cables by heat, suitable shields, insulation or other precautions are to be installed.

8.4.4 Cables having insulating materials with different maximum rated conductor temperatures are not to be bunched together, or, where such bunching is unavoidable, the cables are to be operated so that no cable may reach a temperature higher than that permitted for the lowest temperature rated cable in the group.

8.4.5 Cables having a protective covering which may damage the covering of other cables are not to be bunched together with those cables.

8.4.6 Where a duplicate supply is required, the two cables are to follow different routes which are to be as far apart as practicable.

8.4.7 When installing cables, the minimum inside radius of bend is to be in accordance with the following:

(a) Armoured rubber insulated and PVC insulated cables:

6d

(b) Unarmoured rubber insulated and PVC insulated cables:

4d ($d \leq 25$ mm)
6d ($d > 25$ mm)

(c) Mineral insulated cables:

6d

(d = overall diameter of the finished cable)

8.4.8 Intrinsically safe circuits are to be installed complying with the followings:

(a) The cables for intrinsically safe circuits associated with intrinsically safe type electrical equipment are to be of exclusive use, being installed separately from cables for general circuits.

(b) Intrinsically safe circuits associated with different intrinsically safe type electrical equipment are, as a rule, to be wired individually using different cables. Where it is necessary to use a multi-core cable in common, a cable which has shields by each core or each pair of cores is to be used, having such shields earthed effectively. However, intrinsically safe circuits associated with category "ia" intrinsically safe type electrical equipment are not to be contained in a cable associated with category "ib" intrinsically safe type electrical equipment.

8.5 Precaution against Fire

8.5.1 Where electric cables are installed in bunches, provision is to be made to limit the propagation of fire, which may be achieved by the use of suitably located fire stops. Alternative arrangements will be considered.

8.5.2 All cables for power, lighting, internal communications, signals and navigational aids of essential and emergency services are to be so far as practicable routed clear of machinery spaces of category A and their casings, galleys, laundries and other high fire risk areas. Cables connecting fire pumps to the emergency switchboard is to be of a fire resistant type when they pass through high fire risk areas. All such cables are to be so far as practicable run in such a manner as to preclude their being rendered unserviceable by heating of the bulkheads that may be caused by a fire in an adjacent space.

8.5.3 Cables for those services required to be operable under a fire condition (see 8.5.4) including those for their power supplies are to be arranged so as to minimize the possibility of loss of services due to any localized fire. Where cables for such services cannot be routed clear of high fire risk areas or zones, they are to be fire resistant in accordance with the requirements of IEC Publication 60331 where they pass through high fire risk areas or fire zones other than those which they serve. Cables used in systems that are self monitoring, fail safe or duplicated with cable runs separated as widely as is practicable, may be exempted from the fire resistant requirement, provided the functionality of the

system is maintained.The fire resistant cable are to extend from the control/monitoring panel, or for power supply cables from the distribution point within the space containing the emergency source of electrical power, to the nearest local distribution panel serving the relevant area/zone. In all instances, the run of cables is to be as straight as is practicable. See Fig. VII 8-1.

8.5.4 Cables for services required to be operable under a fire condition include, but not limited thereto, are the following:

(a) Fire and general alarm system.

(b) Fire extinguishing system including fire extinguishing medium release alarms.

(c) Fire detection system.

(d) Control and power systems for all power operated fire doors and their indicating systems.

(e) control and power systems for all power operated watertight doors and their indicating systems.

(f) Emergency lighting.

(g) Low location lighting.

(h) Public address system.

(i) Emergency fire pump.

(j) Remote emergency stop/shutdown arrangement for systems which may support the propagation of fire and/or explosion.

8.6 Cables in Hazardous Areas

Where cables which are installed in hazardous areas introduce the risk of fire or explosion in the event of an electrical fault in such areas, special precautions against such risks are to be taken to the satisfaction of the Society.

8.7 Mechanical Protection of Cables

8.7.1 Cables exposed to risk of mechanical damage are to be protected by metal channels or casings or encolosed in steel conduct.

8.7.2 Cables in cargo holds and other spaces where there is exceptional risk of mechanical damage are to be suitably protected, even if armoured.

8.7.3 Metal casings for mechanical protection of cables are to be efficiently protected against corrosion.

8.7.4 Non-metallic duct or conduit is to be of flame retardant material. PVC conduit is not to be used in refrigerated spaces or on open decks.

8.8 Installation of Cables in Pipes and Conduits

8.8.1 Metallic pipes and conduits are to be effectively earthed and are to be mechanically and electrically continuous across joints.

8.8.2 The internal radius of the bend of pipes and conduits is not to be less than the values specified in 8.4.7. Where, however, pipes exceed 64 mm in diameter, the internal radius of the bend is not to be less than twice a diameter of the pipe.

8.8.3 The drawing-in factor (ratio of the sum of the cross-sectional areas of the cables to the internal cross- sectional area of the pipe) is not to exceed 0.4.

8.8.4 Horizontal pipes or conduits are to have suitable drainage.

8.8.5 Where pipe arrangement is long, expansion joints are to be provided where necessary.

8.9 Penetration through Bulkheads and Decks

8.9.1 Penetration through bulkheads and decks, which are required to have some degree of strength and tightness, is to be so effected as to ensure that the strength and tightness are not impaired.

8.9.2 Penetration through bulkheads and decks, which are required to have some degree of fire integrity, is to be so effected as to ensure that the fire integrity is not impaired.

8.9.3 Where cables pass through non-watertight bulkheads or steel structure, holes are to be bushed with lead or other suitable materials in order to avoid damage to cables. If the thickness of the steel is sufficient and there is no risk of damage to cables, adequately rounded edges may be accepted as the equivalent of bushing.

8.10 Earthing and Securing of Cables

8.10.1 Metallic coverings of cables are to be effectively earthed at both ends, except that in final sub-circuits earthing may be at the supply end only. This does not necessarily apply to instrumentation cables where single point earthing may be desirable for technical reasons.

8.10.2 Effective means are to be taken to ensure that all metallic coverings of cables are made electrically continuous throughout their length.

8.10.3 Lead sheath of lead-sheathed cables is not to be used as the sole means of earthing the non-current carrying parts of electrical equipment.

8.10.4 Cables except those for portable appliances and those installed in conduits, are to be fixed by means of clips or saddles or hangers and bands made of corrosion resistant metal or other non-hygroscopic incombustible materials or suitably corrosion inhibited, all having a large surface area and smooth edges so rounded off that the cables remain tight without their covering being damaged.

8.10.5 The distances between supports are to be chosen according to the type of cable and the probability of vibration and are not to exceed 400 mm. For a horizontal cable run, fixings are to be provided to restrain the cable movement where the cables are laid on cable supports in the form of trays or plates, separate support brackets, hangers or ladder rack fixings, the spacings between the fixing points may be up to 900 mm provided that there are supports with maximum spacing as specified above.This relaxation is not to be applied to cable runs on decks or in areas which can be subjected to forces of seawater impingement.Where cables are installed below cable ways or supports, the fixing distances for securing the cable are to be in accordance with those given in Table VII 8-4.

8.11 Cables in Refrigerated Spaces

8.11.1 Cables are not to be installed in refrigerated spaces, as far as possible. Where cables are installed by necessity in such spaces, wiring is to be in accordance with the following requirements:

(a) PVC insulated cables are not to be used.

(b) Cables are to have a lead sheath or cold resisting impervious sheath.

(c) Cables are not to be, as a rule, embedded in structural heat insulation.

(d) Where cables have to pass through structural heat insulation, they are to be installed at right angle to such insulation and are to be protected by a pipe, preferably fitted with a watertight stuffing tube at each end.

(e) Cables are to be installed so as to leave a space behind the face of the chamber or air duct casings and are to be supported by plating, hangers or cleats.

(f) Supporting strips, plating or hangers used for securing the cable are to be galvanized or otherwise protected against corrosion.

8.12 Cables for Alternating Current

8.12.1 Where it is necessary to use single-core cables for alternating current circuits rated in excess of 20A, the following requirements are to be applied:

(a) Cables are to be either non-armoured or armoured with non-magnetic material.

(b) Where installed in pipe or conduit, cables belonging to the same circuit are to be installed in the same pipe or conduit unless the metallic pipe or conduit is of non-magnetic material.

(c) Cable clips are to include cables of all phases of a circuit unless the clips are of non-magnetic material.

(d) Where two or three single-core cables forming respectively single-phase circuits or three-phase circuits are installed, the cables are to be as near as possible each other. In any case, the clearance between the adjacent cables is not to be greater than one diameter.

(e) Where single-core cables of current rating greater than 250 A are run along steel bulkheads, the cables are to be run apart from the steel, as far as practicable.

(f) Where single-core cables of large sectional area and exceeding 30 meters in length are used, the phases are to be transposed at regular intervals of approximately 15 meters in order to obtain the same degree of impedance of circuits.

(g) In the case of circuits involving several single-core cables in parallel per phase, all cables are to have the same length and the same sectional area.

(h) Magnetic material is not to be placed between single-core cables of a group. Where cables pass through steel plates, all cables of the same circuit are to pass through a plate or gland so made that there is no magnetic material between the cables and the distance between the cables and the magnetic material is not to be less than 75 mm wherever practicable.

8.13 Joints and Branches

8.13.1 Cables are to be jointed by terminals. Soldering fluxes containing corrosive substances are not to be used.

8.13.2 Terminals are to have sufficient contacting surface and pressure. The length of soldered parts of copper tube terminals and other terminals is not to be less than 1.5 times the diameter of conductors.

8.13.3 Joints or branches of cables are to be carried out in a suitable box, except where method of connection causes no possible risk of deteriorating waterproof characteristics, flame retardation, mechanical strength or electrical characteristics of cables.

8.13.4 Terminations and joints in all conductors are to be so made as to retain the original electrical, mechanical, flame retarding and, where necessary, fire resisting properties of the cable.

8.13.5 Terminals and conductors are to be of dimensions adequate for the cable rating.

8.13.6 Cables not having a moisture-resistant insulation (e.g., mineral insulation) are to have their ends effectively sealed against ingress of moisture.

8.14 Tests and Inspections

8.14.1 The tests and inspections described below are to be carried out under the supervision of the Surveyor. In the event of any of the materials proved unsatisfactory in the course of being installed in the ship, such materials are to be rejected, notwithstanding any previous certificate of satisfactory testing.

8.14.2 The following tests are to be carried out in accordance with IEC 60092-350.

(a) Construction inspection and dimension check

(b) Conductor resistance test

(c) High voltage test

(d) Insulation resistance test

8.15 Type Tests

Electric cables are to be designed, manufactured and tested in accordance with the relevant IEC Standard stated in Table VII 8-5.

Table VII 8-1
Permissible Temperature of Insulating Materials

Abbreviated designation	Maximum rated conductor temperature (°C)		Type of insulating material
	Normal operation	Short-circuit	
EPR	90	250	Ethylene propylene rubber
HEPR	90	250	Hard grade ethylene propylene rubber
XLPE	90	250	Cross-linked polyethylene
HF90	90	250	Cross-linked polyolefin halogen-free
S95	95(1)	350(2)	Cross-linked silicone rubber

Notes:
(1) The normal maximum rated conductor temperature for silicone is 180°C but it is limited in view of the type of sheathing material used.
(2) This temperature is applicable only to power cables and is not appropriate for tinned conductors.

Table VII 8-2
Electric Cable Current Ratings for Continuous Services (Based on Ambient Temperature 45°C)

Nominal cross section (mm^2)	Continuous r.m.s. current rating, in amperes								
	Thermoplastic, PVC, PE			EP rubber and crosslinked PE			Silicon rubber or mineral		
	single core	2 core	3 or 4 core	single core	2 core	3 or 4 core	single core	2 core	3 or 4 core
0.75	6	5	4	13	11	9	17	14	12
1	8	7	6	16	14	11	20	17	14
1.25	10	8	7	18	15	13	23	19	16
1.5	12	10	8	20	17	14	24	20	17
2	13	11	9	25	21	17	31	26	21
2.5	17	14	12	28	24	20	32	27	22
3.5	21	18	14	35	30	24	39	33	27
4	22	19	15	38	32	27	42	36	29
5.5	27	23	19	46	39	32	52	44	36
6	29	26	20	48	41	34	55	47	39
8	35	30	24	59	50	41	66	56	46
10	40	34	28	67	57	47	75	64	53
14	49	42	34	83	71	58	94	80	66
16	54	46	38	90	77	63	100	85	70
22	66	56	46	110	93	77	124	105	87
25	71	60	50	120	102	84	135	115	95
30	80	68	56	135	115	94	151	128	106
35	87	74	61	145	123	102	165	140	116
38	92	78	64	155	132	108	175	149	122
50	105	89	74	185	153	126	200	175	140
60	123	104	86	205	174	143	233	198	163
70	135	115	95	225	191	158	255	217	179
80	147	125	103	245	208	171	278	236	195
95	165	140	116	275	234	193	310	264	217
100	169	144	118	285	242	199	320	272	224
120	190	162	133	320	272	224	360	306	252
125	194	165	134	325	280	230	368	313	258
150	220	187	154	365	310	256	410	349	287
185	250	213	175	415	353	291	470	400	329
200	260	221	182	440	375	305	494	420	346
240	290	247	203	490	417	343	570	485	400
300	335	285	235	560	476	392	660	560	460

Table VII 8-3
Correction Factors

Insulation material	Correction factor for ambient air temperature of °C										
	35	40	45	50	55	60	65	70	75	80	85
PVC, Polyethylene	1.29	1.15	1.00	0.82	–	–	–	–	–	–	–
EPR, XLPE	1.12	1.06	1.00	0.94	0.87	0.79	0.71	0.61	0.50	–	–
Mineral, Silicon rubber	1.10	1.05	1.00	0.95	0.89	0.84	0.77	0.71	0.63	0.55	0.45

Table VII 8-4
Maximum Spacing of Clips or Straps for Securing Cables

External diameter of cable (mm)		Maximum spacing of clips or straps for securing cables (mm)		
exceeding	not exceeding	Non-armoured cables	Armoured cables	Mineral insulated cables
–	8	200	250	300
8	13	250	300	370
13	20	300	350	450
20	30	350	400	450
30	–	400	450	450

Table VII 8-5
IEC Standard for Electric Cables

Application	IEC Standard	Title
General constructional and testing requirements	60092-350	Electrical installations in ships - Part 350: General construction and test methods of power, control and instrumentation cables for shipboard and offshore applications
Fixed power and control circuits	60092-353	Electrical installations in ships - Part 353: Power cables for rated voltages 1 kV and 3 kV
Fixed power circuit	60092-354	Electrical installations in ships - Part 354: Single- and three-core power cables with extruded solid insulation for rated voltages 6 kV (Um = 7,2 kV) up to 30 kV (Um = 36 kV)
Insulating and sheathing materials	60092-360	Electrical installations in ships - Part 360: Insulating and sheathing materials for shipboard and offshore units, power, control, instrumentation and telecommunication cables
Instrumentation, control and communication circuits up to 60 V	60092-370	Electrical installations in ships - Part 370: Guidance on the selection of cables for telecommunication and data transfer including radio-frequency cables
Control circuits and instrumentation up to 250 V	60092–376	Electrical installations in ships - Part 376: Cables for control and instrumentation circuits 150/250 V (300 V)
Flame retardant	60332-1-2	Tests on electric and optical fibre cables under fire conditions - Part 1-2: Test for vertical flame propagation for a single insulated wire or cable - Procedure for 1 kW pre-mixed flame
	60332-3-21	Tests on electric cables under fire conditions - Part 3-21: Test for vertical flame spread of vertically-mounted bunched wires or cables - Category A F/R
	60332-3-22	Tests on electric and optical fibre cables under fire conditions - Part 3-22: Test for vertical flame spread of vertically-mounted bunched wires or cables - Category A
	60332-3-23	Tests on electric and optical fibre cables under fire conditions - Part 3-23: Test for vertical flame spread of vertically-mounted bunched wires or cables - Category B
	60332-3-24	Tests on electric and optical fibre cables under fire conditions - Part 3-24: Test for vertical flame spread of vertically-mounted bunched wires or cables - Category C
	60332-3-25	Tests on electric and optical fibre cables under fire conditions - Part 3-25: Test for vertical flame spread of vertically-mounted bunched wires or cables - Category D
Fire resistant	60331-1	Tests for electric cables under fire conditions - Circuit integrity - Part 1: Test method for fire with shock at a temperature of at least 830 degrees C for cables of rated voltage up to and including 0,6/1,0 kV and with an overall diameter exceeding 20 mm
	60331-2	Tests for electric cables under fire conditions - Circuit integrity - Part 2: Test method for fire with shock at a temperature of at least 830 Degrees C for cables of rated voltage up to and including 0,6/1,0 kV and with an overall diameter not exceeding 20 mm
	60331-21	Tests for electric cables under fire conditions - Circuit integrity - Part 21: Procedures and requirements - Cables of rated voltage up to and including 0,6/1,0 kV
	60331-23	Tests for electric cables under fire conditions - Circuit integrity - Part 23: Procedures and requirements - Electric data cables
	60331-25	Tests for electric cables under fire conditions - Circuit integrity - Part 25: Procedures and requirements - Optical fibre cables
Mineral insulated	60702	Mineral insulated cables and their terminations with a rated voltage

	(all parts)	not exceeding 750 V

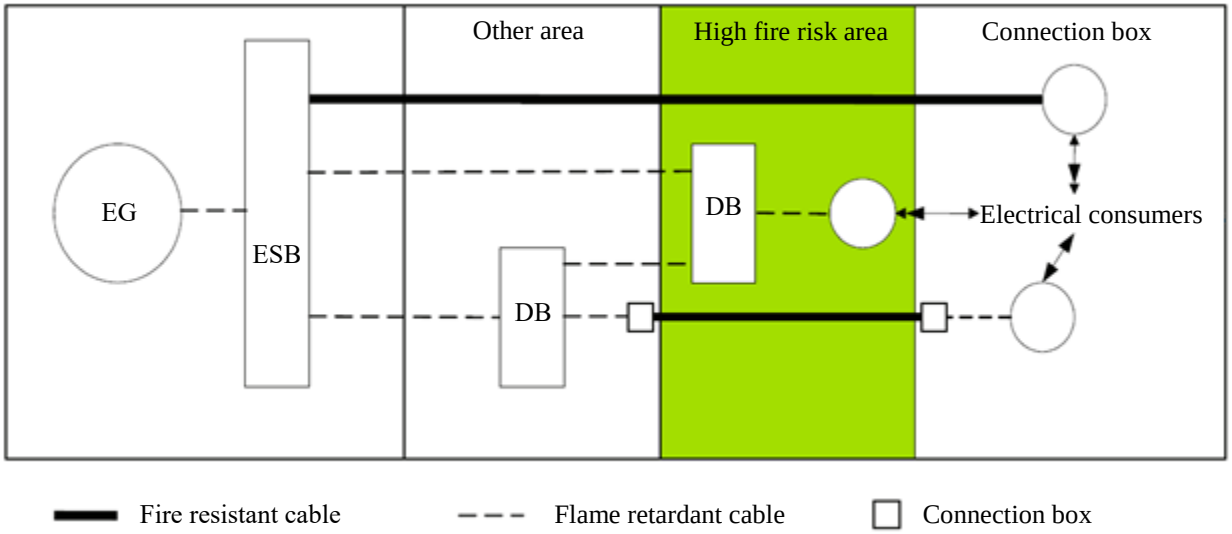

Fig. VII 8-1
Cables within High Fire Risk Areas

Notes: High fire risk area includes as follows:

(1) Machinery spaces are machinery spaces of category A and other spaces containing propulsion machinery, boilers, oil fuel units, steam and internal combustion engines, generators and major electrical machinery, oil filling stations, refrigerating, stabilizing, ventilation and air conditioning machinery, and similar spaces, and trunks to such spaces.

(2) Spaces containing fuel treatment equipment and other highly flammable substances.

(3) Galley and pantries containing cooking appliances.

(4) Laundry containing drying equipment.

(5) Spaces as defined by paragraphs (8), (12), and (14) of Chap. II-2 / Reg.9.2.2.3.2.2 of SOLAS for passenger ships carrying more than 36 passengers.

Chapter 9
Motor Controllers

9.1 Construction

9.1.1 Motor controllers except when installed on ship's service switchboards or section boards or in compartments assigned primarily to electric control equipment are to be protected by enclosing cases of strong cast or welded construction.

9.1.2 The types of enclosing case for control apparatus are to be governed by the surroundings generally as follows:

(a) Waterproof enclosing cases are to be used unless the apparatus is mounted in the deck house or the deck below.

(b) Waterproof or dripproof enclosing cases are to be used when the apparatus is mounted in the engine room or other spaces below the deck where the equipment may be subjected to mechanical injury, dripping of water or oil, etc.

(c) Arrangement is to be made for ventilation when a resistor is in use.

9.1.3 Manual controllers of waterproof type are to be arranged for operation without opening enclosing cases.

9.1.4 Nameplates or permanent labels are to be attached to each controller identifying the purpose or effect of control including the rotation of the handle or hand wheel. The cover of the controller is to have a diagram showing its complete wiring including external connection.

9.1.5 Contactors, relays and other electromagnets are to be capable of functioning satisfactorily even when the line voltage falls to 80% of the normal bus bar voltage for D.C. equipment or 85% of the normal voltage for A.C. equipment. Coils are not to be injured when the voltage rises 10% above the normal voltage and on A.C. supply when the frequency varies up to 5% from the normal for prolonged periods.

9.1.6 The voltage drop across series coils such as overload trips is not to be such as to reduce materially the voltage at the motor terminal.

9.1.7 Resistors

(a) Resistors are to be self-supporting, rigidly fixed, or supported throughout the length with non-ignitable and non-absorbent insulating material.

(b) The element of resistors is to be thoroughly protected against the corrosive action of salt water and atmospheric moisture, either by effective rust proof process, or being embedded in a material which will protect it against corrosion, or it is to be of corrosion resistance materials.

9.2 Control and Protection of Motors

9.2.1 Every electric motor is to be provided with an effective controller for starting, stopping, reversing or speed controlling as necessary and so placed as to be easily accessible to the person controlling the motor.

9.2.2 Generally, every controller is to be provided with undervoltage and over load protections for motors rated at 0.5 kW or above except steering gear motors which need not have overload protection.

9.2.3 Means are to be provided to prevent undesired restarting after stoppage due to low voltage or complete loss of voltage. This requirement does not apply to motors, continuous availability of which is essential to the safety of the ship and the automatic operation.

9.2.4 Primary means of isolation are to be provided so that all voltages may be cut off from the motor, except where means of isolation (that provided at the switchboard, section board, distribution board, etc.) are adjacent to the motor.

9.2.5 Means for automatic disconnection of the power supply are to be provided in the event of excessive current due to mechanical overloading of the motor. This requirements does not apply to the motors for steering gear.

9.2.6 Where the primary means of isolation is remote from the motor, either of the following means or the equivalent is to be provided:

(a) An additional means of isolation fitted adjacent to the motor is to be provided.

(b) Provision is made for locking the primary means of isolation in the "off" position.

9.2.7 When fuses are used to protect polyphase A.C. motor circuits, consideration is to be given to protect against single phasing.

9.2.8 Where controllers for motors of essential services installed in duplicate are built in a grouped starter panel, the busbars, appliances and others are to be so arranged that one fault on the appliances and circuits do not render the motors for the same use unusable simultaneously.

9.2.9 Transformers for power supply to control circuits are to be provided to each motor or each group of motors incorporated in an apparatus.

9.2.10 Running indicators and overload alarms for motors for steering gear are to comply with the requirements in 2.3 of this Part.

9.3 Magnetic Brakes

9.3.1 Electrical parts of magnetic brakes applied to watertight-type motors are to be watertight.

9.3.2 D.C. shunt-wound brakes are to satisfactorily release at 85% of their rated voltage at maximum working temperatures, and d.c. compound-wound brakes under the same conditions as above are to satisfactorily release at 85% of their starting currents.

9.3.3 D.C. series-wound brakes are to satisfactorily release at 40 % or more of their full-load currents and in every case at their starting current; furthermore, they are to satisfactorily dampen in cases where they are at 10% or less of their full-load currents.

9.3.4 A.C. magnetic brakes are to comply with the following requirement:

(a) A.C. magnetic brakes are to satisfactorily release at 80% of their rated voltages at working temperatures.

(b) A.C. magnetic brakes are not to be noisy due to any magnetic action under working conditions.

9.4 Temperature Rise

9.4.1 The maximum permissible temperature rise limit to the principal parts of controllers is not to exceed the values given in Table VII 9-1.

9.4.2 The contacts, magnet cores and other parts not mentioned above whether insulated or not, are not to reach a temperature which might injure themselves or cause damage to the adjacent parts or material.

9.4.3 Where the temperature of any part of the enclosure is likely to exceed 60°C the apparatus is to be so located or guarded as to prevent it from being inadvertently touched.

9.5 Tests

9.5.1 The temperature rise test of controllers and their resistors is to be carried out under normal working condition, and the temperature rise of each is not to exceed the values given in 9.4 of this Part. However, the temperature rise test for controllers which are produced in series and identical to their type tested prototype unit may be omitted from the second unit onward subject to the Society's permission.

9.5.2 Controllers and resistors are to be tested with high voltages applied between the current carrying part and the earthed frame or case, and between each circuit of different potentials with all covers in normal position at any frequency between 25 and 100 Hz maintained for 1 minute. The test voltage is to be as follows:

(a) The control gear rated at 60V or less is to be tested at 500V.

(b) The control gear rated above 60V is to be tested at twice the rated voltage plus 1,000V, with a minimum of 1,500 V.

9.5.3 The operation test of the controller is to be carried out to confirm the requirements of 9.1.6, 9.2.3 and 9.2.4 of this Part.

9.5.4 Immediately after the completion of the dielectric test the insulation resistance of the control gear between poles, and between the current carrying part and the earthed frame or case is to be not less than 1 mega-ohm when tested with D.C. voltage of approximately 500V tester.

Table VII 9-1
Limit of Temperature Rise of Controllers (Based on ambient temperature 45°C)

Items and parts				Limit of temperature rise (°C)	
				Thermometer method	Resistance method
Coils (Air)	Class A insulation			60	80
	Class E insulation			75	95
	Class B insulation			85	105
	Class F insulation			110	130
	Class H insulation			135	155
	Class C insulation			no limit	no limit
	Single layer enamel windings	Class A insulation		80	–
		Class E insulation		95	–
		Class B insulation		105	–
		Class F insulation		130	–
		Class H insulation		155	–
		Class C insulation		no limit	–
Contact piece	Mass form	Continuous use over 8 hours	Copper or copper alloy	40	–
			Silver or silver alloy	70	–
		Switch on and off one time or more in about 8 hours	Copper or copper alloy	40	–
			Silver or silver alloy	60	–
	Multilayer form or knife form		Copper or copper alloy	35	–
Busbar and connecting conductor (Bare or Class A insulation and higher class)				60	–
Terminals for external cables				45	–
Metallic resistors	Moulded-case type			245	–
	Those other than molded-case type	For continuous use		295	–
		For intermittent use		345	–
		For starter use		345	–
	Exhaust (approx. 25 mm above exhaust port)			170	–

Notes:

(1) Measurement of temperature of voltage coil is in principle to be made by resistance method only.

(2) Where the insulation of single layer enamel windings is higher in class than that of the adjacent parts, the temperature rise associated with the class of insulation for the adjacent parts is to be applied.

(3) For single layer bare windings, the temperature rise associated with the class of insulating material on the adjacent parts is to be applied.

(4) Moulded-case type metallic resistor means such type as to be buried in the insulating material so that no surface of metallic resistor is exposed.

Chapter 10
Accessories and Lighting Equipment

10.1 General

10.1.1 Accessory and lighting fittings are to be designed and constructed as follows:

(a) The passage for the insulated conductor is to be of ample size and free from rough projection sharp angles and bends.The outlet for cables is to have well rounded edges or be suitably bushed.

(b) Insulated conductors are so installed that the stress is not to be applied to terminals to which conductors are connected.

(c) Enclosures are to be made of metal with corrosion resistant finish or durable flame-retarding insulating materials. The inside of metallic enclosures is to be coated or painted with an insulating paint or compound.

(d) Live parts or their insulation are to be so fixed that dust and moisture cannot accumulate.

(e) Lighting fittings are to have a suitable degree of protection in accordance with 1.11 of this Part.

(f) Means is to be provided to ground effectively the external metal parts which are liable to touch.

10.1.2 Lighting fittings are to be so arranged as to prevent temperature rises which could damage cables and wiring, and to prevent surrounding materials from becoming excessively hot.

10.2 Accessories

10.2.1 The live part of the joint box is to be mounted on the durable non-ignitable and non-hygroscopic insulating material of permanent high dielectric strength. The live part is to be so arranged by suitable spacing or shielding with non-ignitable insulating material that conductors of opposite polarity cannot be readily short circuited.

10.2.2 Receptacles and plugs of different electrical rating or distribution system are to be such that a wrong connection cannot be made. Socket outlets and plugs are to be so proportioned that their average temperature rise does not exceed 30°C when the normal working current is flowing through them continuously.

10.2.3 Socket outlets having a current rating of 15 A or more is to be provided with a switch, and it is to be interlocked to such a way that it is impossible to insert or withdraw the plug when the switch is in the "ON" position. Socket outlets and plugs fixed on the weather deck or machinery space or places exposed to drips or sprays are to be of weather proof type.

10.3 Lighting Fittings

10.3.1 Lamp holders are to be constructed wholly of flame-retarding and non-hygroscopic materials, and supports for live parts are to be of non-ignitable materials. All metal parts are to be of robust proportion.

10.3.2 Lighting fittings are to be so designed as to provide adequate dissipation of heat from lamps, and insulated conductors connected to the fittings are to be sutiably protected from the effect of high temperature.

10.3.3 Lamps exposed to mechanical injury are to be enclosed in fittings of solid construction and provided with strong guards. Lighting fittings or portable lamps for the battery room or such other spaces where inflammable vapour or gas may be normally liable to accumulate, are to be of explosion proof type approved by the Society.

10.3.4 Navigation lights are to be complied with Convention on the International Regulations for Preventing Collisions at Sea 1972 as amended and IMO Resolution - The performance standards for navigation lights, navigation light controllers and associated equipment as amended.

10.4 Fluorescent Lamps

10.4.1 Fittings, reactors, capacitors and other auxiliaries are not to be mounted on surfaces which are subject to high temperatures.

10.4.2 Capacitors of 0.5 microfarads and above are to be provided with a means of prompt discharge on disconnection of the supply.

10.4.3 Inductors and high reactance transformers are to be installed as close as practicable to the associated discharge lamp.

Chapter 11

Main Source and Emergency Source of Electrical Power

11.1 General

11.1.1 This chapter specifies the requirements for the design of installations of main source of electrical power and emergency source of electrical power.

11.1.2 Electrical installations are to comply with the following:

(a) All electrical auxiliary services necessary for maintaining the ship in normal operational and habitable conditions and other electrical services as deemed necessary by the Society will be ensured without recourse to the emergency source of electrical power;

(b) Electrical services essential for safety will be ensured under various emergency conditions; and

(c) The safety of passengers, crew and ship from electrical hazards will be ensured.

11.2 Main Source of Electrical Power and Lighting Systems

11.2.1 Main source of electrical power

(a) A main source of electrical power of sufficient capacity to supply all those services specified in 11.1.2(a) is to be provided. This main source of electrical power is to consist of at least two generating sets.

(b) The capacity of these generating sets is to be such that in the event of any one generating set being stopped it will still be possible to supply those services necessary to provide normal operational conditions of propulsion and safety and other electrical services as deemed necessary by the Society. Minimum comfortable conditions of habitability is also to be ensured which include at least adequate services for cooking, heating, domestic refrigeration, mechanical ventilation, sanitary and fresh water.

(c) The arrangements of the ship's main source of electrical power are to be such that the services referred to the requirement in 11.1.2(a) can be maintained regardless of the speed and direction of the propulsion machinery or shafting.

(d) The generating sets are to be such as to ensure that with any one generator or its primary source of power out of operation, the remaining generating sets are to be capable of providing the electrical services necessary to start the main propulsion plant from a dead ship condition. The emergency source of electrical power may be used for the purpose of starting from a dead ship condition if its capability either alone or combined with that of any other source of electrical power is sufficient to provide at the same time those services required to be supplied by the requirements in 11.3.5(a) to (c) or 11.4.5(a) to (d).

(e) Where the main source of electrical power is necessary for propulsion and steering of the ship, the system is to be so arranged that the electrical supply to equipment necessary for propulsion and steering and to ensure safety of the ship will be maintained or immediately restored in the case of loss of any one of the generators in service.

11.2.2 Power management

(a) Arrangements are to be made to disconnect automatically, after an appropriate time delay, circuits of the categories noted in (b), when the generator(s) is/are over loaded, are sufficient to ensure the connected generating set(s) not be overloaded;

(b) The circuits that may be disconnected by the load shedding system are:

(i) Non-essential circuits.

(ii) Circuits feeding services for habitability, such as cooking, heating, domestic refrigeration, mechanical ventilation, sanitary and fresh water.

(c) If required this load shedding may be carried out in one or more stages in which case the non-essential circuits are to be included in the first group to be disconnected.

(d) Consideration is to be given to provide means to inhibit automatically the starting of large motors, or the connection of other large loads, until sufficient generating capacity is available to supply them.

11.2.3 Number and ratings of transformers

Where transformers constitute an essential part of the electrical supply system required by 11.2.1, the system is to be so arranged as to ensure the same continuity of the supply as is stated in 11.2.1.

11.2.4 Lighting systems

(a) A main electric lighting system supplied from the main source of electrical power is to be provided in spaces or compartments where crew and personnel use and normally work on duty.

(b) The main electric lighting system is to be so arranged as not to be impaired in the event of a fire or other casualty in spaces containing the emergency source of electrical power, associated transforming equipment, the emergency switchboard and the emergency lighting switchboard.

(c) Emergency lighting is to provide sufficient illumination necessary for the safety as the requirements in 11.3.5(a), 11.4.5(a) and (b).

(d) The emergency electric lighting system is to be so arranged as not to be impaired in the event of a fire or other casualty in spaces containing the main source of electrical power, associated transforming equipment, the main switchboard and the main lighting switchboard.

11.2.5 Location of main switchboard.

The main switchboard and one main generating station are to be located in a same space. However, the main switchboard may be separated from the generators by an environmental enclosure, such as may be provided by a machinery control room situated within the main boundaries of the space.

11.3 Emergency Source of Electrical Power in Passenger Ships

11.3.1 A self-contained emergency source of electrical power is to be provided.

11.3.2 The emergency sources of electrical power, associated transforming equipment, if any, transitional source of emergency power, emergency switchboard and emergency lighting switchboard are to be located above the uppermost continuous deck and are to be readily accessible from the open deck. They are not to be located forward of the collision bulkhead.

11.3.3 The location of the emergency source of electrical power and associated transforming equipment, if any, the transitional source of emergency power, the emergency switchboard and the emergency electric lighting switchboards in relation to the main source of electrical power, associated transforming equipment, if any, and the main switchboard are to be such as to ensure to the satisfaction of the Society that a fire or other casualty in spaces containing the main source of electrical power, associated transforming equipment, if any, and the main switchboard or in any machinery space of category A is not to interfere with the supply, control and distribution of emergency electrical power. As far as practicable, the spaces containing the emergency source of electrical power, associated transforming equipment, if any, the transitional source of emergency electrical power and the emergency switchboard are not to be contiguous to the boundaries of machinery spaces of category A or those spaces containing the main source of electrical power, associated transforming equipment, if any, or the main switchboard. Where this is not practicable, the contiguous boundaries are to be Class A60.

11.3.4 Provided that suitable measures are taken for safeguarding independent emergency operation under all circumstances, the emergency generator may be used exceptionally, and for short periods, to supply non-emergency circuits.

11.3.5 The electrical power available is to be sufficient to supply all those services that are essential for safety in an emergency, due regard being paid to such services as may have to be operated simultaneously. The emergency source of electrical power is to be capable, having regard to starting currents and the transitory nature of certain loads, of supplying simultaneously at least the following services for the periods specified hereinafter, if they depend upon an electrical source for their operation:

(a) For a period of 36 hours, emergency lighting:
- (i) at every muster and embarkation station and over sides.
- (ii) in alleyways, stairways and exits, giving access to the muster and embarkation stations;
- (iii) in all service and accommodation alleyways, stairways and exits, personnel lift cars;
- (iv) in the machinery spaces and main generating stations including their control positions;
- (v) in all control stations, machinery control rooms, and at each main and emergency switchboard;
- (vi) at all stowage positions for firemen's outfits;
- (vii) at the steering gear; and
- (viii) at the fire pump, the sprinkler pump and the emergency bilge pump referred to in 11.3.5(d) of this Part and at the starting position of their motors.

(b) For a period of 36 hours:
- (i) the navigation lights and other lights required by the International Regulations for Preventing Collisions at Sea in force.
- (ii) VHF radio installations, MF radio installations, INMARSAT Ship Earth Stations and MF/HF radio installations.

(c) For a period of 36 hours:
- (i) all internal communication equipment required in an emergency;
- (ii) the shipborne navigational equipment as required by Governmental Regulations; where such provision is unreasonable or impracticable the Society may waive this requirement for ships having a gross tonnage less than 5,000;
- (iii) the fire detection and fire alarm system, and the fire door holding and release system; and
- (iv) for intermittent operation of the daylight signaling lamp, the ship's whistle, the manually operated call points and all internal signals that are required in an emergency;

unless such services have an independent supply for the period of 36 hours from an accumulator battery suitably located for use in an emergency.

(d) For a period of 36 hours:
- (i) one of the fire pumps required by Governmental Regulations;
- (ii) the automatic sprinkler pump, if any; and
- (iii) the emergency bilge pump and all the equipment essential for the operation of electrically powered remote controlled bilge valves.

(e) Steering gear if powered from emergency power source, for a period of 30 minutes continuous operation on ships having a gross tonnage 10,000 and upwards and 10 minutes continuous operation on ships having a gross tonnage less than 10,000.

(f) For period of half an hour:
- (i) any watertight doors if electrically operated together with their indicators and warning signals.
- (ii) the emergency arrangements to bring the lift cars to deck level for the escape of persons. The passenger lift cars may be brought to deck level sequentially in an emergency.

(g) In a ship engaged regularly on voyages of short duration, the Society if satisfied that an adequate standard of safety would be attained may accept a lesser period than the 36 hour period specified in 11.3.5(a) to (d) above but not less than 12 hours.

11.3.6 The emergency source of electrical power may be either a generator or an accumulator battery, which is to comply with the following:

(a) Where the emergency source of electrical power is a generator, it is to be:
  (i) driven by a suitable prime-mover with an independent supply of fuel having a flashpoint (closed cup test) of not less than 43°C;
  (ii) started automatically upon failure of the electrical supply from the main source of electrical power and is to be automatically connected to the emergency switchboard; those services referred to 11.3.7 of this Part are then to be transferred automatically to the emergency generating set. The automatic starting system and the characteristic of the prime-moveraretobe such as to permit the emergency generator to carry its full rated load as quickly as is safe and practicable, subject to a maximum of 45 seconds; and
  (iii) provided with transitional source of emergency electrical power according to 11.3.7 of this Part.

(b) Where the emergency source of electrical power is an accumulator battery, it is to be cable of:
  (i) carrying the emergency electrical load without recharging while maintaining the voltage of the battery throughout the discharge period within 12% above or below its nominal voltage;
  (ii) automatically connecting to the emergency switchboard in the event of failure of the main source of electrical power; and
  (iii) immediately supplying at least those services specified in 11.3.7 of this Part.

(c) Where electrical power is necessary to restore propulsion, the capacity is to be sufficient to restore propulsion to the ship in conjunction with other machinery, as appropriate, from a dead ship condition within 30 minutes after blackout.

11.3.7 The transitional source of emergency electrical power required by 11.3.6(a)(iii) above is to consist of an accumulator battery suitable located for use in an emergency which is to operate without recharging while maintaining the voltage of the battery throughout the discharge period within 12% above or below its nominal voltage and be of sufficient capacity and so arranged as to supply automatically in the event of failure of either the main or emergency source of electrical power at least the following services, if they depend upon an electrical source for their operation:

(a) For half an hour:
  (i) the lighting required by 11.3.5(a) and (b)(i) above; and
  (ii) all services required by 11.3.5(c)(i), (iii) and (iv) of this Part unless such services have an independent supply for the period specified from an accumulator battery suitably located for use in an emergency.

(b) Power to close the watertight doors but not necessarily all of them simultaneously, unless an independent temporary source of stored energy is provided. Power to the control, indication and alarm circuits as required for half an hour.

11.3.8 The emergency switchboard is to be installed as near as is practicable to the emergency source of electrical power.

11.3.9 Where the emergency source of electrical power is a generator, the emergency switchboard is to be located in the same space unless the operation of the emergency switchboard would thereby be impaired.

11.3.10 No accumulator battery fitted in accordance with this Regulation is to be installed in the same space as the emergency switchboard. An indicator is to be mounted in a suitable place on the main switchboard or in the machinery control room to indicate when the batteries constituting either the emergency source of electrical power or the transitional source of emergency electrical power referred to in 11.3.6(a)(iii) or 11.3.7 above are being discharged.

11.3.11 The emergency switchboard is to be supplied during normal operation from the main switchboard by an interconnector feeder which is to be adequately protected at the main switchboard against overload and short circuit and which is to be disconnected automatically at the emergency switchboard upon failure of the main source of electrical power. Where the system is arranged for feedback operation, the interconnector feeder is also to be protected at the emergency switchboard at least against short circuit.

11.3.12 In order to ensure ready availability of the emergency source of electrical power, arrangements are to be made where necessary to disconnect automatically non-emergency circuits from the emergency switchboard to ensure that power is to be available to the emergency circuits.

11.3.13 The emergency generator and its prime-mover and any emergency accumulator battery are to be so designed and arranged as to ensure that they are to function at full rated power when the ship is upright and when inclined at any angle of list up to 22.5° or when inclined up to 10° either in the fore or aft direction, or is in any combination of angles within those limits.

11.3.14 Provision is to be made for the periodic testing of the complete emergency system and is to include the testing of automatic starting arrangements.

11.3.15 In addition to the emergency lighting required by 11.3.5(a), on every passenger ship with ro-ro cargo spaces:

(a) all passenger public spaces and alleyways are to be provided with supplementary electric lighting that can operate for at least three hours when all other sources of electric power have failed and under any condition of heel. The illumination provided is to be such that the approach to the means of escape can be ready seen. The source of power for the supplementary lighting is to be consist of accumulator batteries located within the lighting units that are continuously charged, where practicable, from the emergency switchboard. Alternatively, any other means of lighting which are at least as effective may be accepted by the Society. The supplementary lighting is to be such that any failure of the lamp will be immediately apparent. Any accumulator battery provided is to be replaced at intervals having regard to the specified service life in the ambient conditions that they are subject to in service; and

(b) a portable rechargeable battery operated lamp is to be provided in every crew space alleyway, recreational space and every working space which is normally occupied unless supplementary emergency lighting, as required by 11.3.5(a), is provided.

11.4 Emergency Source of Electrical Power in Cargo Ships

11.4.1 For a Cargo ship having a gross tonnage 500 and upward for unrestricted ocean service, there is to be a self-contained emergency source of electric power.

11.4.2 The emergency sources of electrical power, associated transforming equipment, if any, transitional source of emergency power, emergency switchboard and emergency lighting switchboard are to be located above the uppermost continuous deck and are to be readily accessible from the open deck. They are not to be located forward of the collision bulkhead, except where permitted by the Society in exceptional circumstances.

11.4.3 The locations of the emergency source of electrical power, associated transforming equipment, if any, the transitional source of emergency power, the emergency switchboard and the emergency lighting switchboard in relation to the main source of electrical power, associated transforming equipment, if any, and the main switchboard are to be such as to ensure to the satisfaction of the Society that a fire or other casualty in the space containing the main source of electrical power, associated transforming equipment, if any, and the main switchboard, or in any machinery space of category A will not interfere with the supply, control and distribution of emergency electrical power. As far as practicable the spaces containing the emergency source of electrical power, associated transforming equipment, if any, the transitional source of emergency electrical power and the emergency switch-board are not to be contiguous to the boundaries of machinery spaces of category A or those spaces containing the main source of electrical power, associated transforming equipment, if any, and the main switchboard. Where this is not practicable, the contiguous boundaries are to be Class A60.

11.4.4 Provided that suitable measures are taken for safeguarding independent emergency operation under all circumstances, the emergency generator may be used, exceptionally, and for short periods, to supply non-emergency circuits.

11.4.5 The electrical power available is to be sufficient to supply all those services that are essential for safety in an emergency, due regard being paid to such services as may have to be operated simultaneously. The emergency source of electrical power is to be capable, having regard to starting currents and the transitory nature of certain loads, of supplying simultaneously at least the following services for the periods specified hereinafter, if they depend upon an electrical source for their operation:

(a) For a period of 3 hours, emergency lighting at every muster and embarkation station and over sides.

(b) For a period of 18 hours, emergency lighting:
   (i) in all service and accommodation alleyways, stairways and exits, personnel lift cars and personnel lift trunks;
   (ii) in the machinery spaces and main generating stations including their control positions;
   (iii) in all control stations, machinery control rooms, and at each main and emergency switchboard;
   (iv) at all stowage positions for firemen's outfits;
   (v) at the steering gear; and
   (vi) at the fire pump referred to in 11.4.5(e) of this Part, at the sprinkler pump, if any, and at the emergency bilge pump, if any, and at the starting positions of their motors.
   (vii) in all cargo pump-rooms of tankers.

(c) For a period of 18 hours:
   (i) the navigation lights and other lights required by the International Regulations for Preventing Collisions at Sea in force.
   (ii) VHF radio installations, MF radio installation, INMARSAT Ship Earth Stations and MF/HF radio installations.

(d) For a period of 18 hours:
   (i) all internal communication equipment as required in an emergency;
   (ii) the shipborne navigational equipment as required by Governmental Regulations; where such provision is unreasonable or impracticable the Society may waive this requirement for ships having a gross tonnage less than 5,000;
   (iii) the fire detection and fire alarm system; and
   (iv) intermittent operation of the daylight signaling lamp, the ship's whistle, the manually operated call points and all internal signals that are required in an emergency; unless such services have an independent supply for the period of 18 hours from an accumulator battery suitably located for use in an emergency.

(e) For a period of 18 hours one of the fire pumps required by Governmental Regulations if dependent upon the emergency generator for its source of power.

(f) Steering gear if powered from emergency power source, for a period of 30 minutes continuous operation on ships having a gross tonnage 10,000 tons and upwards, and 10 minutes continuous operation on ships having a gross tonnage less than 10,000.

(g) For period of half an hour: any watertight doors if electrically operated together with their indicators and warning signals.

(h) In a ship engaged regularly in voyages of short duration, the Society if satisfied that an adequate standard of safety would be attained may accept a lesser period than the 18 hour period specified in 11.4.5(b) to (e) above but not less than 12 hours.

11.4.6 The emergency source of electrical power may be either a generator or an accumulator battery, which is to comply with the following:

(a) Where the emergency source of electrical power is a generator, it is to be:

(i) driven by a suitable prime-mover with an independent supply of fuel, having a flashpoint (closed cup test) of not less than 43°C;

(ii) started automatically upon failure of the main source of electrical power supply unless a transitional source of emergency electrical power in accordance with 11.4.6(a)(iii) of this Part is provided; where the emergency generator is automatically started, it is to be automatically connected to the emergency switchboard; those services referred to in 11.4.7 of this Part are then to be connected automatically to the emergency generator; and

(iii) provided with a transitional source of emergency electrical power as specified in 11.4.7 of this Part unless an emergency generator is provided capable both of supplying the services mentioned in 11.4.7 of this Part and of being automatically started and supplying the required load as quickly as is safe and practicable subject to a maximum of 45 seconds.

(b) Where the emergency source of electrical power is an accumulator battery it is to be capable of:

(i) carrying the emergency electrical load without recharging while maintaining the voltage of the battery throughout the discharge period within 12% above or below its nominal voltage;

(ii) automatically connecting to the emergency switchboard in the event of failure of the main source of electrical power; and

(iii) immediately supplying at least those services specified in 11.4.7 of this Part.

(c) Where electrical power is necessary to restore propulsion, the capacity is to be sufficient to restore propulsion to the ship in conjunction with other machinery, as appropriate, from a dead ship condition within 30 minutes after blackout.

11.4.7 The transitional source of emergency electrical power where required by 11.4.6(a)(iii) above is to consist of an accumulator battery suitably located for use in an emergency which is to operate without recharging while maintaining the voltage of the battery throughout the discharge period within 12% above or below its nominal voltage and be of sufficient capacity and is to be so arranged as to supply automatically in the event of failure of either the main or the emergency source of electrical power for half an hour at least the following services if they depend upon an electrical source for their operation:

(a) the lighting required by 11.4.5(a), (b) and (c)(i) above. For this transitional phase, the required emergency electric lighting, in respect of the machinery space and accommodation and service spaces may be provided by permanently fixed, individual, automatically charged, relay operated accumulator lamps; and

(b) all services required by 11.4.5(d)(i), (iii) and (iv) above unless such services have an independent supply for the period specified from an accumulator battery suitably located for use in an emergency.

11.4.8 The emergency switchboard is to be installed as near as is practicable to the emergency source of electrical power.

11.4.9 Where the emergency source of electrical power is a generator, the emergency switchboard is to be located in the same space unless the operation of the emergency switchboard would thereby be impaired.

11.4.10 No accumulator battery fitted in accordance with this Regulation is to be installed in the same space as the emergency switchboard. An indicator is to be mounted in a suitable place on the main switchboard or in the machinery control room to indicate when the batteries constituting either the emergency source of electrical power or the transitional source of electrical power referred to 11.4.6(b) or 11.4.7 above are being discharged.

11.4.11 The emergency switchboard is to be supplied during normal operation from the main switchboard by an interconnector feeder which is to be adequately protected at the main switchboard against overload and short circuit and which is to be disconnected automatically at the emergency switchboard upon failure of the main source of

electrical power. Where the system is arranged for feedback operation, the interconnector feeder is also to be protected at the emergency switchboard at least against short circuit.

11.4.12 In order to ensure ready availability of the emergency source of electrical power, arrangements are to be made where necessary to disconnect automatically non-emergency circuits from the emergency switchboard to ensure that electrical power is to be available automatically to the emergency circuits.

11.4.13 The emergency generator and its prime-mover and any emergency accumulator battery are to be so designed and arranged as to ensure that they will function at full rated power when the ship is upright and when inclined at any angle of list up to 22.5° or when inclined up to 10° either in the fore or aft direction, or is in any combination of angles within those limits.

11.4.14 Provision is to be made for the periodic testing of the complete emergency system and is to include the testing of automatic starting arrangements.

11.5 Starting Arrangements for Emergency Generating Sets

11.5.1 Emergency generating sets are to be capable of being readily started in their cold condition at a temperature of 0°C. If this is impracticable, or if lower temperatures are likely to be encountered, provision acceptable to the Society is to be made for the maintenance of heating arrangements, to ensure ready starting of the generating sets.

11.5.2 Each emergency generating set arranged to be automatically started is to be equipped with starting devices approved by the Society with a stored energy capability of at least three consecutive starts.The source of stored energy is to be protected to preclude critical depletion by the automatic starting system, unless a second independent means of starting is provided. In addition, a second source of energy is to be provided for an additional three starts within 30 minutes unless manual starting can be demonstrated to be effective.

11.5.3 The stored energy is to be maintained at all times, as follows:

(a) electrical and hydraulic starting systems are to be maintained from the emergency switchboard;

(b) compressed air starting systems may be maintained by the main or auxiliary compressed air receivers through a suitable non-return valve or by an emergency air compressor which, if electrically driven, is supplied from the emergency switchboard;

(c) all of these starting, charging and energy storing devices are to be located in the emergency generator space; these devices are not to be used for any purpose other than the operation of the emergency generating set. This does not preclude the supply to the air receiver of the emergency generating set from the main or auxiliary compressed air system through the non-return valve fitted in the emergency generator space.

11.5.4 Where automatic starting is not required, manual starting is permissible, such as manual cranking, inertia starters, manually charged hydraulic accumulators, or powder charge cartridges, where they can be demonstrated as being effective.

11.5.5 When manual starting is not practicable, the requirements of 11.5.2 and 11.5.3 above are to be complied with except that starting may be manually initiated.

11.6 Use of Emergency Generator in Port

11.6.1 To prevent the emergency generator or its prime mover from becoming overloaded when used in port, arrangements are to be provided to shed sufficient non-emergency loads to ensure its continued safe operations.

11.6.2 The prime mover is to be arranged with fuel oil filters and lubrication oil filters, monitoring equipment and protection devices as requested for the prime mover for main power generation and for unattended operation.

11.6.3 The fuel oil supply tank to the prime mover is to be provided with a low level alarm, arranged at a level ensuring sufficient fuel oil capacity for the emergency services for the period of time as required in 11.3 and 11.4.

11.6.4 The prime mover is to be designed and built for continuous operation and is to be subjected to a planned maintenance scheme ensuring that it is always available and capable of fulfilling its role in the event of an emergency at sea.

11.6.5 Fire detectors are to be installed in the location where the emergency generator set and emergency switchboard are installed.

11.6.6 Means are to be provided to readily change over to emergency operation.

11.6.7 Control, monitoring and supply circuits for the purpose of the use of the emergency generator in port are to be so arranged and protected that any electrical fault will not influence the operation of the main and emergency services.
When necessary for safe operation, the emergency switchboard is to be fitted with switches to isolate the circuits.

11.6.8 Instructions are to be provided on board to ensure that, even when the vessel is underway, all control devices (e.g. valves, switches) are in a correct position for the independent emergency operation of the emergency generator set and emergency switchboard.These instructions are also to contain information on the required fuel oil tank level, position of harbour/sea mode switch, if fitted, ventilation openings, etc.

11.7 Radio Installation

11.7.1 The radio installation is to be provided with reliable, permanently arranged electrical lighting, independent of the main and emergency sources of electrical power, for the adequate illumination of the radio controls for operating the radio installation.

11.7.2 A reserve source or sources of energy is to be provided on every ship, to supply radio installations, for the purpose of conducting distress and safety radio-communications, in the event of failure of the ship's main and emergency sources of electrical power. The reserve source or sources of energy is to be capable of simultaneously operating the VHF radio installation and, as appropriate for the sea or sea area for which the ship is equipped, either the MF radio installation, the MF/HF radio installation, or the INMARSAT ship earth station and any of the additional loads mentioned in 11.7.5, 11.7.6 and 11.7.8 for a period of at least:

(a) one hour on ships provided with an emergency source of electrical power, if such source of power complies fully with all relevant requirements of 11.3 or 11.4, including the supply of such power to the radio installations; and

(b) six hours on ships not provided with an emergency source of electrical power complying fully with all relevant requirements of 11.3 or 11.4, including the supply of such power to the radio installations.The reserve source or sources of energy need not supply independent HF and MF radio installation at the same time.

11.7.3 The reserve source of energy and its switchboard are to be as high as practicable in the ship and readily accessible to the radio officer. The switchboard is to, wherever possible, be situated in a radio room. If it is not, it is to be capable of being illuminated.

11.7.4 The reserve source orsources of energy is to be independent of the propelling power of the ship and the ship's electrical system.

11.7.5 Where, in addition to the VHF radio installation, two or more of the other radio installations, referred to in 11.7.2, can be connected to the reserve source or sources of energy, they are to be capable of simultaneously supplying, for the period specified by 11.7.2, the VHF radio installation and:

(a) all other radio installations which can be connected to the reserve source or sources of energy at the same time; or

(b) whichever of the other radio installations will consume the most power, if only one of the other radio installations can be connected to the reserve source or sources of energy at the same time as the VHF radio installation.

11.7.6 The reserve source or sources of energy may be used to supply the electrical lighting required by 11.7.1.

11.7.7 Where a reserve source of energy consists of a rechargeable accumulator battery or batteries a mean of automatically charging the batteries is to be provided which is to be capable of recharging them to minimum capacity requirements within 10 hours.

11.7.8 If an uninterrupted input of information from the ship's navigational or other equipment to a radio installation is needed to ensure its proper performance, means are to be provided to ensure the continuous supply of such information in the event of failure of the ship's main or emergency source of electrical power.

11.8 Ships of Less than 500 GT

Special consideration is to be given to cargo ships of less than 500 GT where it is impractical to comply with these emergency power requirements.

11.9 Ships on Short Duration Voyages

A 12 hour emergency power supply may be specially considered for ships engaged regularly in voyages of short duration.

Chapter 12

Special Requirements for Ships Intended for the Carriage in Bulk of Oil, Liquefied Gases and Other Hazardous Cargoes

12.1 General

12.1.1 In addition to the requirements of other relevant Chapters the special requirements of this Chapter apply to:

(a) Oil tankers for the carriage in bulk of oil cargoes having a flash point not exceeding 60°C (closed cup test).

(b) Ships for the carriage of liquefied gases in bulk.

(c) Ships for the carriage of dangerous chemicals in bulk.

(d) Ships for the carriage of coal in bulk.

(e) Ships for the carriage of vehicles with fuel in their tanks for their own propulsion.

(f) Ships carrying dangerous goods.

12.1.2 For details of safe type equipment see 1.10 of this Part.

12.2 Systems of Supply

12.2.1 The following systems of generation and distribution are acceptable:

(a) D.C., two-wire insulated,

(b) A.C., single-phase, two-wire, insulated,

(c) A.C., three-Phase, three-wire, insulated.

12.2.2 Notwithstanding the requirement in 12.2.1, a hull return distribution system may be used for the systems listed in 2.1.1(c)(i) to (iii).

12.2.3 Notwithstanding the requirement in 12.2.1, an earthed distribution system may be used for the systems defined in 2.1.1(f).

12.3 Cables and Cable Installation

12.3.1 Electric cables are not to be installed in dangerous zones or spaces, except as permitted in certain paragraphs of this Chapter, or when associated with intrinsically safe circuits.

12.3.2 All cables which may be exposed to cargo oil, oil vapour or gas are to be sheathed with at least one of the following:

(a) Copper sheath (for mineral insulated cable).

(b) Lead alloy sheath plus further mechanical protection, e.g. armour or non-metallic impervious sheath.

(c) Non-metallic impervious sheath plus armour (for mechanical protection and earth detection).

12.3.3 Where corrosion may be expected, non-metallic impervious sheath is to be applied over metallic armour of cables.

12.3.4 Cables installed on deck or on fore and aft gangways are to be protected against mechanical damage. Cables are to be installed so as to avoid strain or chafing, and due allowance is to be made for expansion or working of the structure. Where expansion bends are fitted, they are to be accessible for maintenance.

12.3.5 Where cables pass through gastight bulkheads or decks, separating dangerous zones or spaces from non-dangerous zones or spaces, arrangements are to be such that the gastight integrity of the bulkhead or deck is not impaired.

12.3.6 Cables installed in pump rooms are to be suitably protected against mechanical damage.

12.3.7 Cables associated with intrinsically safe circuits are to be used only for such circuits. They are to be physically separated from cables associated with non-intrinsically safe circuits, e.g. neither led in the same casing or pipe nor secured by the same fixing clip.

12.3.8 Metal coverings of cables are to be earthed in accordance with 8.10 of this Part.

12.4 Control Circuits

12.4.1 Measuring, monitoring, control and telecommunication circuits located in dangerous zones or spaces are to be intrinsically safe.

12.5 Transmitting Aerials

12.5.1 Transmitting aerials and any associated rigging are to be sited well clear of gas and vapour outlets.

12.6 Dangerous Zones and Spaces

12.6.1 Dangerous zones or spaces are defined in 12.8, 12.9 and 12.10 of this Chapter, but the following general principles are to apply:

(a) Spaces containing flammable cargo and all zones or spaces adjacent to cargo tanks are regarded as dangerous zones or spaces.

(b) An enclosed or semi-enclosed space with direct access into a dangerous zone or space is regarded as a dangerous space.

(c) An enclosed space located in a dangerous zone or space which may be regarded as a non-dangerous space, provided that it is separated from the flammable liquid cargo by not less than two gastight steel bulkheads or decks, is mechanically ventilated and, in addition, has no direct opening into a dangerous zone or space.

12.7 Semi-enclosed Spaces

Semi-enclosed spaces are considered to be spaces limited by decks and/or bulkheads in such a manner that the natural conditions of ventilation are sensibly different from those obtained on open deck, e.g. centre castle space.

12.8 Additional Requirements for Oil Tankers Intended for the Carriage in Bulk of Oil Cargoes having a Flash Point not Exceeding 60°C (Closed Cup Test)

12.8.1 Dangerous zones or spaces

(a) Paragraphs 12.8.2 to 12.8.11 define the electrical equipment permitted in dangerous zones or spaces.

(b) The relevant gas group and temperature class for the safe type equipment are IIA T3 of IEC 60079, Electrical Apparatus for Explosive Gas Atmospheres or an equivalent national standard.

12.8.2 Cargo tanks

Intrinsically safe electrical equipment of category "ia".

12.8.3 Cofferdams adjoining cargo tanks

(a) Intrinsically safe electrical equipment of category "ia";

(b) Electric depth-sounding devices hermetically enclosed, located clear of the cargo tank bulkhead, with cables installed in heavy gauge steel pipes with gastight joints up to the main deck;

(c) Where impressed current cathodic protection systems are fitted (for external hull protection only), and if it is essential for the cables to pass through cofferdams, the cables are to be installed in heavy gauge steel pipes with gastight joints up to the main deck. Corrosion resistant pipes, providing adequate mechanical protection, are to be used in compartments which may be filled with sea water (e.g. permanent ballast tanks);

(d) Where it is necessary for cables to pass through these spaces, other than those supplying the equipment described in 12.8.3(b) and 12.8.3(c), they are to be installed in heavy gauge steel pipes with gastight joints.

12.8.4 Cargo pump rooms

(a) intrinsically-safe equipment;

(b) Electrical equipment as defined in 12.8.3(b) and 12.8.3(c).

(c) pressurized lighting fittings (symbol p) of either the air driven type, or pressurized from an external source of protective gas and arranged to be de-energized automatically on loss of pressurization (see 2.1.7(f));

(d) flameproof lighting fittings (Symbol d) (See 2.1.7(f));

(e) gas detector heads having sinter-type flametrap protection, included within an intrinsically-safe circuit; the gas detector system is to be certified;

(f) general alarm sounders of flameproof type, without internal sparking contacts;

(g) through runs of cables, confined to pump room entrances only, installed in heavy gauge steel pipes with gas tight joints;

(h) electric motors driving equipment located in cargo pump rooms are to be separated from the pump room by a gastight bulkhead or deck. Flexible couplings or other means of maintaining alignment are to be fitted in the shafts between the motors and the driven unit. In addition, suitable stuffing boxes are to be fitted where shafts pass through gastight bulkheads or decks.

(i) fans Located in cargo pump rooms are to be non-sparking construction.

12.8.5 Enclosed or semi-enclosed spaces immediately above cargo tanks or having bulkheads above and in line with cargo tank bulkheads, compartments for cargo hoses, spaces other than cofferdams adjoining and below the top of a cargo tank, e.g. trunks, passageways and holds.

(a) intrinsically-safe equipment; this is to be of category "ia" where the spaces or compartments are not mechanically ventilated;

(b) safe type lighting fittings (See 2.1.7(f));

(c) through runs of cable;

(d) general alarm sounders of flameproof type, without internal sparking contacts.

12.8.6 Spaces under cargo tanks (e.g. duct keels)

(a) Intrinsically safe equipment of category "ia";

(b) Electrical equipment as defined in 12.8.3(b) and 12.8.4(c) to (f).

12.8.7 Zones on open deck within 3 m of any cargo oil tank outlet or vapour outlet (e.g. cargo tank or cofferdam hatch; sight port; tank cleaning opening; ullage opening; sounding pipe; cargo pump room entrance and ventilation intakes and exhausts), zones on open deck over all cargo tanks (including all ballast tanks within the cargo tank area) to the full width of the vessel, plus 3 m forward and 3 m aft of the cargo tank area or any spillage barrier installed aft of the cargo tank area, up to a height of 2.4 m above the deck.

(a) safe type equipment;

(b) through runs of cable; cable expansion bends are not to be within 3 m of any cargo tank or vapor outlet.

12.8.8 Zones within 5 m of any pressure/vacuum valve required by 5.9.1(b)(i) of Part VI, or at any height above and within a 10 m radius (measured horizontally) of any vent required by 5.9.1(b)(ii) of Part VI, and below and within a 3 m radius of any such vent not of the high velocity type.

(a) Intrinsically safe equipment

12.8.9 Spaces below the level of, and having direct openings onto, the main deck, but outside the dangerous zone previously described.

(a) safe type equipment;

(b) through runs of cable.

12.8.10 Mechanically ventilated or pressurized spaces

(a) where a space of the type defined by 12.8.9 is provided with a self closing door for the opening onto the main deck and has mechanical ventilation, the air intake for which is remote from any dangerous space or zone, non-safe type equipment is permitted within the space;

(b) where a space opening into a dangerous zone or space which is provided with an airlock; is separated from the cargo by at least two gastight bulkhead, and is pressurized to maintain at an overpressure relative to the external hazardous area by ventilation from a non-dangerous area, non-safe type equipment is permitted within the space.

12.8.11 Electrical installations in enclosed or semi-enclosed spaces having a direct opening into any dangerous space or zone are to comply with the requirements for the space or zone to which the opening leads.

12.9 Additional Requirements for Ships for the Carriage of Liquefied Gases in Bulk

Electrical installations are to be in accordance with Chapter 10 of International Code for the Construction and Equipment of Ships Carrying Liquefied Gases in Bulk. In addition such installations are to comply with the requirements of 12.8 in so far as applicable.

12.10 Additional Requirements for Ships for the Carriage of Dangerous Chemicals in Bulk

Electrical installations are to be in accordance with Chapter 10 of International Code for the Construction and Equipment of Ships Carrying Dangerous Chemical in Bulk. In addition such installations are to comply with the requirements of 12.8 in so far as applicable.

12.11 Additional Requirements for Ships for the Carriage of Coal in Bulk

12.11.1 Electrical equipment in cargo hold

As a rule, no electrical equipment is to be installed in the cargo holds. Where it is unavoidable to install electrical equipment in the cargo holds, the equipment is to comply with the following:

(a) Switches and socket-outlets are not to be installed except those connected to intrinsically safe circuits.

(b) Where it is unavoidable to install other electrical equipment than those specified in (a) above, the equipment is to be of explosion-proof type as deemed appropriate by the Society and such equipment and its associated cables are to be installed so as to be kept free from mechanical damage. In addition, the feeder circuits for the equipment are to be provided with multipole linked switches situated outside the holds, so devised as to have the equipment usually locked with the switch in "off" position.

(c) Cables passing through cargo holds are to be led in gastight heavy gauge steel pipes, and the both ends of the pipes are to be sealed by using cables glands and the like in way of the boundaries of the cargo holds.

12.11.2 Electrical equipment in compartments adjoining cargo holds

(a) The electrical equipment installed in the compartments adjoining cargo holds and having opening such as non-gastight door, hatch and the like in their bulkheads and decks is to be of the explosion-proof type as deemed appropriate by the Society.

(b) No electrical equipment except those of explosion-proof type is to be installed in the vicinity of ventilation openings of the cargo holds.

12.12 Additional Requirements for Ships for the Carriage of Motor Vehicles with Fuel in Their Tanks for Their Own Propulsion

12.12.1 Electrical equipment in cargo spaces

(a) Electrical equipment and wiring are to be of a type suitable for use in explosive gas atmospheres.

(b) Electrical equipment installed above a height of 450 mm from the deck or from each platform for vehicles may be of a type so enclosed and protected as to prevent the escape of sparks as an alternative of the electrical equipment specified in (a) above. In this case, such electrical equipment are to be installed so that they can be operated only when ventilation system so designed as to provide continuous ventilation of the cargo spaces at the rated of at least ten air changes per hour is in operation whenever motor vehicles are on board. The platforms with openings of sufficient size permitting penetration of petrol gases downwards may not be regarded as the platforms in the application of this requirements.

(c) Electrical equipment and wiring in an exhaust ventilation ducts for the cargo spaces are to be of a type approved by the Society for use in explosive gas atmospheres.

(d) As a rule, no portable electrical appliances are to be located in the cargo spaces. Where it is unavoidable to locate the appliances in the spaces, they are subject to the approval of the Society.

(e) Fire detection system, gas detection system and the like which are installed in the cargo spaces are to be of explosion-proof type as deemed appropriate by the Society.

(f) All electrical circuits terminating in the cargo spaces are to be provided with multipole linked isolating switches situated outside the cargo spaces and accessible only to authorized personnel. Provision is to be made for isolation, for locking in the "off" position of the means of control of such circuits. However, this requirement does not apply to safety devices such as fire or gas detectors.

12.12.2 Electrical equipment in compartments adjoining cargo spaces

For the electrical equipment in the compartments adjoining cargo spaces and having openings such as non-gastight door, hatch, scuttle and the like in their bulkheads and decks, the requirements in 12.12.1 are generally to be applied.

12.13 Additional Requirements for Ships for the Carriage of Dangerous Goods

Electrical installations for ships carrying dangerous goods are to comply with the requirements in 13.2 of Part IX as well as the requirements in this Chapter.

Chapter 13

Additional Requirements for Electric Propulsion Equipment

13.1 General

13.1.1 Electrical installations for ships which rely solely on propulsion motors for their propulsion are to meet the relevant requirements specified in this part, and in addition to those in this Chapter.

13.1.2 Propulsion generators and motors are to be enclosed, ventilated or provided with substantial wire or mesh screens to prevent personnel injury or entrance of foreign matter.

13.1.3 Propulsion generators , motors , and converters are to be provided with means to prevent the accumulation of moisture and condensate when idle.

13.1.4 Where the arrangements permit a propulsion motor to be connected to a generating plant having a continuous rating greater than the motor rating, means are to be provided to limit the continuous input to the motor to a value not exceeding the continuous full load torque for which the motor and shafts are approved.

13.1.5 The ventilation and cooling systems for electrical propulsion equipment are to be provided with monitoring devices arranged to operate an alarm if the temperature of the heated cooling medium exceeds a predetermined safe value.

13.1.6 The stator windings of A.C. propulsion generators and motors and interpole windings of D.C. propulsion generators and motors, rated above 500 kW, are to be provided with temperature sensors.

13.1.7 The temperature sensors required by 13.1.6 are to be arranged to operate an alarm if the temperature exceeds a predetermined safe value.

13.1.8 In general, for a ship to be assigned an unrestricted service notation, it is to have two independently driven propellers or other propulsion devices, each connected with at least one electric motor, where these form the sole means of propulsion.

13.2 Power Requirements

13.2.1 The propulsion system is to have sufficient power for maneuvering the vessel and for going astern. With the ship travelling at its maximum speed the propulsion equipment is to be capable of stopping and reversing the ship in an agreed time.

13.2.2 The propulsion system is to have adequate torque and power margins for all operating conditions including manoeuvring and rough weather with due regard to propeller and ship characteristics.

13.2.3 The electric power for the propulsion system may be derived from generating sets dedicated to propulsion duty or from a central power generation plant which serves both propulsion and ship service loads.

13.2.4 Where propulsion power is derived from a central, common, power plant the control system is to ensure a safe distribution of power between propulsion and ship services, with tripping of non-essential loads and/or reduction in propulsion power if necessary.

13.2.5 Where a central power generation system is employed, the number and rating of generator sets is to be such that with one set out of action the remaining sets are capable of providing all essential and normal ship service loads whilst maintaining an effective level of propulsion power.

13.2.6 Where, in a central power generation system, the electrical power requirements are normally supplied by two or more generating sets operating in parallel, on sudden loss of power from one set, the rating of the remaining set(s)

in service is to be sufficient to ensure uninterrupted operation of essential services and an effective level of propulsion power.

13.3 Propulsion Control

13.3.1 Propulsion control systems are to be stable throughout their normal operating range and arranged to attenuate any effects of cyclic propeller load fluctuations caused by wave action.

13.3.2 Step-less control of propeller speed, and/or pitch, from zero to full power ahead or astern is to be provided.

13.3.3 The control system is to ensure that there is no dangerous overspeeding of propulsion motors upon loss of load.

13.3.4 Interlocks are to be provided in the control system to ensure that ahead and astern circuits are not energized simultaneously.

13.3.5 Any single fault in either the propulsion excitation or power system is not to result in a total loss of propulsion power.

13.3.6 Propulsion machines may be controlled from the bridge or deck. Alternative control in the engine room is to be provided. Transfer of control to the engine room in an emergency is to be possible without excessive loss of time and simultaneous control from both bridge and the engine room is impossible.

13.3.7 Where two or more control stations are provided, indicating lights are to be located at each control station to indicate whether that station is in control. Means are to be provided to ensure that simultaneously control cannot be made from different stations.

13.3.8 Each control station is to be provided with emergency stops for propulsion motors. The emergency stop is to be independent of the normal control system.

13.3.9 The control system is to limit the propulsion power if the power available from the generator(s) is not sufficient to supply the demand level of propulsion power. In the event of a power limitation, there is to be a visual indication at the control stations.

13.3.10 Local controls are to be provided, independent of any remote or automatic system, to permit effective control of the propulsion equipment.

13.4 Protection of Propulsion System

13.4.1 Provision is to be made for protection against severe overloads, and electrical faults likely to result in damage to plant.

13.4.2 The main propulsion circuits are to be provided with means for detecting earth faults. Where the fault current flowing is liable to cause damage to the electrical equipment there are to be arrangements for interrupting the current.

13.4.3 For the protection of electrical equipment and cables against overvoltages means are to be provided for limiting the induced voltage when field windings, and other inductive circuits are opened. Protective resistors and devices are to be sized to cater for the likely extreme operating conditions.

13.4.4 Where, on stopping or reversing the propeller, regenerated energy is produced by the propulsion motor this is not to cause a dangerous increase of speed in the prime mover or a dangerous overvoltage condition on the supply system. Where a central power generation system is used then the voltage and frequency fluctuations are not to exceed the limits given in 1.5.1.

13.5 Instruments

13.5.1 The main control station is to be provided with the following instruments:

(a) A.C. systems:

(i) an ammeter for each generator and propulsion motor; voltmeter, wattmeter and frequency meter for each generator and ammeter for each excitation circuit;

(ii) a temperature indicator for each propulsion generator and motor, rated above 500 kW, the indicator is to read stator winding and cooling system temperature;

(b) D.C. systems:

(i) a voltmeter and ammeter for each generator and propulsion motor;

an ammeter for each excitation circuit;

(ii) a temperature indicator for each propulsion generator and motor, rated above 500 kW, the indicator is to read interpole winding and cooling system temperature.

13.5.2 Each control station is to be provided with instruments to indicate:

(a) propeller speed;

(b) direction of rotation for a fixed pitch propeller or pitch position for a controllable pitch propeller;

(c) visual indication of power limitation.

Chapter 14

High Voltage Installations with Voltages above 1 kV up to 15 kV

14.1 General

14.1.1 Field of application

The following requirements apply to A.C. three-phase system with nominal voltage exceeding 1 kV, the nominal voltages is the voltage between phases.If not otherwise stated herein, construction and installation applicable to low voltage equipment generally apply to high voltage equipment.

14.1.2 Nominal system voltage

The nominal system voltage is not to exceed 15 kV.

Note: Where necessary for special application, higher voltages may be accepted by the Society.

14.1.3 High-voltage, low-voltage segregation

Equipment with voltage above about 1 kV is not be installed in the same enclosure as low voltage equipment, unless segregation or other suitable measures are taken to ensure that access to low voltage equipment is obtained without danger.

14.2 System Design

14.2.1 Distribution

(a) Network configuration for continuity of ship services

It is to be possible to split the main switchboard into at least two independent sections, by means of at least one circuit breaker or other suitable disconnecting devices, each supplied by at least one generator. If two separate switchboards are provided and interconnected with cables, a circuit breaker is to be provided at each end of the cable.

Services which are duplicated are to be divided between the sections.

(b) Earthed neutral systems

In case of earth fault, the current is not to be greater than full load current of the largest generator on the swichboard or relevant switchboard section and not less than three times the minimum current required to operate any device against earth fault.

It is to be assured that at least one source neutral to ground connection is available whenever the system is in the energised mode. Electrical equipment in directly earthed neutral or other neutral earthed systems is to withstand the current due to a single phase fault against earth for the time necessary to protection device.

(c) Neutral disconnection

Means of disconnection are to be fitted in the neutral earching connection of each generator so that the generator may be disconnected for maintenance and for insulatin resistance measurement.

(d) Hull connection of earthing impedance

All earthing impedances are to be connected to the hull. The connection to the hull is to be so arranged that any circulating currents in the earth connections do not interfere with radio, radar, communication and control equipment circuits.

(e) Divided systems

In the systems with neutral earthed, connection of the neutral to the hull is to be provided for each section.

14.2.2 Degrees of protection

(a) General

Each part of the electrial installation is to be provided with a degree of protection appropriate to the location, as a minimum the requirement of IEC Publication 60092-201.

(b) Rotating machines

The degree of protection of enclosures of rotating electrical machines is to be at least IP23.

The degree of protection of terminals is to be at least IP44.

For motors installed in spaces accessible to unqualified personnel, degree of protection against approaching or contact with live or moving parts of at least IP4X is required.

(c) Transformers

The degree of protection of enclosures of transformers is to be at least IP23.

For transformers installed in spaces accessible to unqualified personnel a degree of protection of at least IP4X is required. For transformers not contained in enclosures, see page 14.7.1.

(d) Switchgear, controlgear assemblies and converters

The degree of protection of metal enclosed switchgear, control gear assemblies and static converters is to be at least IP32. For switchgear, control gear assemblies and static converters installed in spaces accessible to unqualified personnel, a dagree of protectin of at least IP4X is required.

14.2.3 Insulation

(a) Air clearance

In general for Non Type Tested equipment phase-to-phase air clearances and phase-to-earth air clearances between non-insulated parts are to be not less than those specified below.

Nominal voltage (kV)	Minimum air clearance (mm)
3 (3.3)	55
6 (6.6)	90
10 (11)	120
15	160

Intermediate values may be accepted for nominal voltages provided that the next higher air clearance is observed.

In the case of smaller distances, appropriate voltage impulse test must be applied.

(b) Creepage distances

Creepage distances between live parts and between live parts and earthed metal parts for standard components are to be in accordance with relevant IEC Publications for the nominal voltage of the system, the nature of the insulation material and the transient overvoltage developed by switch and fault conditions.For non-standardised parts within the busbar section of a switchgear assembly, the miniumu creepage distance is to be at least 25 mm/kV and behind current limiting devices, 16 mm/kV.

14.2.4 Protection

(a) Faults on the generator side of circuit breaker

Protective devices are to be provided against phase-to-phase faults in the cables connecting the generators to the main switchboard and against interwinding faults within the generators. The Protective devices are to trip the generator circuit breaker and to automatically de-excite the generator. In distribution systems with a neutral earthed, phase to earth faults are also to be treated as above.

(b) Faults to earth

Any earth fault in the system is be indicated by means of a visual and audible alarm. In low impedance or direct earthed systems provision is to be made to automatic disconnect the faulty circuits. In high impedance earthed systems, where outgoing feeders will not be isolated in case of an earth fault, the insulation of the equipment is to be designed for the phase to phase voltage.

Note: Earthing factor is defined as the ratio between the phase to earth voltage of the health phase and the phase to phase voltage. This factor may vary between $\frac{1}{\sqrt{3}}$ and 1.

A system is defined effectivly earthed (low impedance) when this factor is lower than 0.8. A system is defined non-effectively earthed (high impedance) when this factor is higher than 0.8.

(c) Power transformers

Power transformers are to be provided with overload and short circuit protection. When transformers and connected in parallel, tripping of the protective devices at the primary side has to automatically trip the switch connected at the secondary side.

(d) Voltage transformers for control and instrumentation

Voltage transformers are to be provided with overload and short circuit protection on the secondary side.

(e) Fuses

Fuses are not to be used for overload protection.

(f) Low voltage systems

Lower voltage systems supplied through transformers from high voltage systems are to be protected against overvoltages. This may be achieved by:

(i) direct earthing of the lower voltage system

(ii) appropriate neutral voltage limiters

(iii) earthed screen between the primary and secondary windings of transfromers.

14.3 Rotating Machinery

14.3.1 Stator windings of generators

Generator stator windings are to have all phase ends brought out for the installation of the differential protection.

14.3.2 Temperature detectors

Rotating machinery is to be provided with temperature detectors in their stator windings to actuate a visual and audible alarm in a normally attended position whenever the temperature exceeds the permissible limit.If embedded temperature detectors are used, means are to be provided to protect the circuit against overvoltage.

14.3.3 Tests

In addition to the tests normally required for rotating machinery, a high frequency high voltage test in accordance with IEC Publication 60034-15 is to be carried out on the individual coils in order to demonstrate a satisfactory withstand level of the inter-turn insulation to steep fronted switching surges.

14.4 Power Transformers

14.4.1 General

Dry type transformers have to comply with IEC Publication 60076-11. Liquid cooled transformers have to comply with IEC Publication 60076. Oil immersed transformers are to be provided with the following alarms and protections:

(a) liquid level (Low) - alarm

(b) liquid temperature (High) - alarm

(c) liquid level (Low) - trip or load reduction

(d) liquid temperature (High) - trip or load reduction

(e) gas pressure relay (High) - trip

14.5 Cables

14.5.1 General

Cables are to be constructed in accordance with the IEC Publication 60092-353 and 60092-354 or other equivalent standard.

14.6 Switchgear and Controlgear Assemblies

14.6.1 General

Switchgear and controlgear assemblies and to be constructed according to the IEC Publication 62271-200 and the following additional requirements.

14.6.2 Construction

(a) Mechanical construction

Switchgear is to be of metal - enclosed type in accordance with IEC Publication 62271-200 or of the insulation - enclosed type in accordance with the IEC Publication 62271-201.

(b) Locking facilities

Withdrawable circuit breakers and switches are to be provided with mechanical locking facilities in both service and disconnected positions. For maintenance purposes, key locking of withdrawable circuit breakers and switches and fixed disconnectors is to be possible.

Withdrawable circuit breakers are to be located in the service position so that there is no relative motion between fixed and moving portions.

(c) Shutters

The fixed contacts of withdrawable circuit brakers and switches are to be so arranged that in the withdrawable position the live contacts are automatically covered.

(d) Earthing and short-circuiting

For maintenance purposes an adequate number of earthing and short-circuiting devices is to be provided to enalbe circuits to be worked upon with safety.

14.6.3 Auxiliary systems

(a) Source and capacity of supply

If electrical energy and/or physical energy is required for the operation of circuit brakers and switches, a stored supply of such energy is to be provided for at least two operations of all the components. However, the tripping due to overload or short-circuit, and under-vlotage is to be independent of any stored electrical energy sources. This does not preclude shunt tripping provided that alarms are activated upon lack of continuity in the release circuits and power supply failures.

(b) Number of external supply sources

When external source of supply is necessary for auxiliary circuits, at least two external sources of supply are to be provided and so arranged that a failure or loss of one source will not cause the loss of more than one generator set and/or set of essential services.Where necessary one source of supply is to be from the emergency source of electrical power for the start up form dead ship condition.

14.6.4 High voltage test

A power-frequency voltage test is to be carried out on any switchgear and controlgear assemblies. The test procedure and voltages are to be according to the IEC Publication 62271-200.

14.7 Installation

14.7.1 Electrical equipment

Where equipment is not contained in an enclosure but a room forms the enclosure of the equipment, the access doors are to be so interlocked that they cannot be opened until the supply is isolated and the equipment earthed down. At the entrance of the spaces where high-voltage electrical equipment is installed, a suitable marking is to be placed which indicates danger of high-voltage. As regard the high-voltage electrical equipment installed outside a.m. spaces, the similar marking is to be provided.

14.7.2 Cables

(a) Runs of cables

In accomodation spaces, high voltage cables are to be run in enclosed cable transit systems.

(b) Segregation

High voltage cables are to be segregated form cables operationg at different voltage ratings each other; in particular, they are not to be run in the same cable bunch, nor in the same ducts or pipes, or, in the same box. Where high voltage cables of different voltage ratings are on the same cable tray, the air clearance between cables is not to be less than the minimum air clearance for the higher voltage side in 14.2.3(a). However, high voltage cables are not to be installed on the same cable tray for the cables operating at the nominal system voltage of 1 kV and less.

(c) Installation arrangements

High voltage cables, in general, are to be installed on carrier plating when they are provided with a continuous metallic sheath or armour which is effectively bonded to earth; otherwise they are to be installed for their entire length in metalic casings effectively bonded to earth.

(d) Terminations

Terminations in all conductors of high voltage cables are to be, as far as practicable, effectively covered with suitable insulating material. In terminal boxes, if conductors are not insulated, phases are to be separated from earth and from each other by substantial barriers of suitable insulating materials. High voltage cable of the radial field type, i.e. having a conductive layer to control the electric field within the insulation, are to have terminations which provide electric stress control. Terminations are to be of a type compatible with the insulation and jacket material of the cable and are to be provided with means to ground all metallic shielding components (i.e. tapes, wires etc).

(e) Marking

High voltage cables are to be readily identifiable by suitable marking.

(f) Test after installation

Before a new high voltage cable installation, or an addition to an existing installation, is put into service a voltage withstand test is to be satisfactorily carried out on each completed cable and its accessories. The test is to be carried out after an insulation resistance test. When a D.C. voltage withstand test is carried out, the voltage is to be not less than:

1.6 ($2.5U_o$ + 2 kV) for cables for rated voltage (U_o) up to and including 3.6 kV, or

4.2 U_o for higher rated voltages

Where U_o is the rated power frequency voltage between conductor and earth or metallic screen for which the cable is designed. The test voltage is to be maintained for a minimum of 15 minutes. After completion of the test the conductors are to be connected to earth for a sufficient period in order to remove any trapped electric charge. An insultation resistance test is then repeated. Alternatively, an A.C. voltage withstand test may be

carried out upon advice from high voltage cable manufacturer at a voltage not less than normal operating voltage of the cable and it is to be maintained for a minimum of 24 hours.

Note: Tests according to those specific in IEC Publication 60502 will be considered adequate too.

Chapter 15
Semiconductor Equipment

15.1 General

15.1.1 The requirements of this chapter apply to semiconductor equipment which is rated 5 kW and upwards and intended to be used for essential service or emergency service.

15.1.2 Semiconductor equipment is to comply with the requirements of IEC 60146: semiconductor converters, or an acceptable and relevant National Standard amended where necessary for ambient temperature. (See 1.3)

15.1.3 Semiconductor static power converter equipment is to be rated for the required duty having regard to peak loads, system transients and overvoltage.

15.1.4 Converter equipment may be air or liquid cooled and is to be so arranged that it cannot remain loaded unless effective cooling is maintained. Alternatively the load may be automatically reduced to a level commensurate with the cooling available.

15.1.5 Liquid cooled converter equipment is to be provided with leakage alarms and there is to be a suitable means provided to contain any liquid which may leak from the system. Where the semi-conductors and other current carrying parts are in direct contact with the cooling liquid, provision is to be made for monitoring the liquid to ensure it has a satisfactory resistivity.

15.1.6 Where forced cooling is used there is to be temperature monitoring of the heated cooling medium with an alarm and shutdown when the temperature exceeds a preset value.

15.1.7 Cooling fluids are to be non-toxic and of low flammability.

15.1.8 Converter equipment is to be so arranged that the semiconductor devices, fuses, control and firing circuit boards may be readily removed from the equipment for repair or replacement.

15.1.9 Test and monitoring facilities are to be provided to permit identification of control circuit faults and faulty components.

15.1.10 Protection devices fitted for converter equipment protection are to ensure that, under fault conditions, the protective action of circuit breakers, fuses or control systems is such that there is no further damage to the converter or the installation.

15.1.11 Converter equipment, including any associated transformers, reactors, capacitors and filters, if provided, is to be so arranged that the harmonic distortion, and voltage spikes, introduced in to the ships electrical system are within the limits of 1.5.2 or restricted to a lower level necessary to ensure that it causes no malfunction of equipment connected to the electrical installation.

15.1.12 Over voltage spikes or oscillations caused by commutation or other phenomena, are not to result in the supply voltage waveform deviating from a superimposed equivalent sine wave by more than 10% of the maximum value of the equivalent sine wave.

15.1.13 When converter equipment is operated in parallel, load sharing is to be such that under normal operating conditions overloading of any unit does not occur and the combination of paralleled equipment is stable throughout the operating range.

15.1.14 When converter equipment has parallel circuits there is to be provision to ensure that the load is distributed uniformly between the parallel paths.

15.1.15 Transformers, reactors, and other circuit devices associated with convertor equipment are to be suitable for the distorted voltage and current waveforms to which they may be subjected.

15.1.16 Any regenerated power developed during the operation of converter equipment is not to result in disturbances to the supply system voltage and frequency which exceeds the limits of 1.5.1.

15.2 Tests

15.2.1 High voltage test

Convertor equipment are to withstand a high voltage test fo duration 1 minute applied between the terminals and earthed parts, with frequency 25-100 Hz and the following test voltages:

Rated voltage (v)	Test voltage (A.C. r.m.s.)
up to 60	500 V
over 60 to 1,000	1,000 V + twice the rated voltage

15.2.2 Function test

All basic functions, including auxiliary functions, are to be tested under light load conditions. Input voltage and frequency are to be varied according to 1.5.1. Main output characteristics are to be measured.

15.2.3 Temperature rise test

Temperature rise is to be measured at rated current of converter equipment. Total temperature is not to exceed specified values, taking the maximum ambient temperature into consideration. However, the temperature rise test for converters which are produced in series and identical to their type tested prototype unit may be omitted from the second unit onward subject to the Society's permission.

15.2.4 Insulation resistance test

Insulation resistance between live parts and earth is not to be less than 1 MΩ when test with D.C. voltage of at least 500 V.

Chapter 16

Tests after Installation on Board

16.1 General

16.1.1 Before a new installation or an alteration of or an addition to an existing installation is put into service, the appropriate trials specified in this Chapter are to be made in the presence of the Surveyor.

16.2 Insulation Tests

16.2.1 The insulation resistance test referred to 16.2.2 to 16.2.4 hereunder is to be carried out by means of a self-contained instrument such as a direct reading ohmmeter of magnet type applying a D.C. voltage of not less than 500V. Where a circuit incorporates capacitors of more than 2 microfarads total capacitance, a constant-voltage instrument is to be used in order to ensure accurate test reading.

16.2.2 Insulation resistance of circuits.

(a) The insulation resistance to every distribution circuit between all insulated poles and earth and between poles is not to be less than 1 megohm.

(b) Each interior communication circuit operating at voltages of 50V or above, is to have an insulated resistance between conductors and between each conductor and the earth of not less than 1 megohm. For circuits below 50 volts the insulation resistance is to be not less than $\frac{1}{3}$ megohm.

16.2.3 The insulation resistance of switchboards and distribution panels between each bus bar and the earth is to be not less than 1 megohm.

16.2.4 The insulation resistance of each generator and motor under working temperature is to be in accordance with the requirements in 3.8.2 of this Part.

16.3 Performance Tests

16.3.1 Switches, circuit breakers and associated equipment on switchboards, section boards and distribution panels are to be operated on load to demonstrate that they are mechanically and electrically fitted in satisfactory condition.

16.3.2 Generators are to be operated for a time sufficient to show satisfactory operation, individually and in parallel, and with all possible load combinations.

16.3.3 Each motor with its accessory and control gear is to be run under the operating condition for a sufficient length of time to demonstrate that the wiring, alignment, capacity, direction of rotation, speed, com-mutation and the temperature are satisfactory. Cargo winch and windlass motors are to be satisfactory at their specified hoisting and lowering loads.

16.3.4 Lighting fittings, receptacles and other connecting appliances on lighting circuits, ranges, bake ovens, other heating and cooking appliances on the heating power system, engine room telegraph, docking telegraph, rudder angle indicator, fire alarm, morse telegraph light, navigation light indicator panels and telephone system of internal communication system are all to be tested to demonstrate that their suitability and function of operation are satisfactory in all respects.

16.3.5 All electric equipment located in hazardous areas is to be examined to ensure that it is of a type permitted by the Rules, and has to be installed in compliance with its certification, and that the integrity of the protection concept has not to be impaired.

16.3.6 Additional tests are to be carried out if deemed necessary by the Surveyor.

Chapter 17

Spare Parts

17.1 Spare Parts

17.1.1 For the efficient operation of ships engaged in the open sea service, a general list of spare parts proposed in this section is normally recommended to be furnished for each ship.

17.1.2 Notwithstanding the requirement of 17.1.1, in the case of rotating machines and control gears intended for electric propulsion plants, the types and quantities of spare parts specified in Table VII 17-1, Table VII 17-3 and VII 17-5 are to be provided.

17.1.3 Spare parts for generators, exciters and essential service motors, are to be furnished as shown in Table VII 17-1.

17.1.4 For each size of steering gear motors and motor-generators, if no stand-by machine is installed, the parts shown in Table VII 17-2 are required in addition to the spare parts for motors enumerated in the preceding Articles.

17.1.5 For spare parts for the control gear, see Table VII 17-3.

17.1.6 For spare parts for brakes, see Table VII 17-4.

17.1.7 For spare parts for switchboards and panel boards, see Table VII 17-5.

17.2 Testing Instruments

17.2.1 For the installation of 50 kW and above, a D.C. 500V megger is required in order that all the parts of the system may be periodically tested.

17.2.2 An universal portable tester for both A.C. and D.C. is recommended to be provided for every ship.

17.3 Storage and Packing

All spare parts and instruments are to be packed in suitable cases to resist deterioration and are to be marked of their contents on the surface of the case.

Table VII 17-1
Spare Parts for Generators, Exciters and Essential Service Motors

Description	No. of spare parts required
Bearing or bearing linings including oil ring	1 for each 4 or less
Brushholders	1 for each 10 or less
Brushholder springs	1 for each 4 or less
Brushes	1 for each 1
Field coils for direct-current machines	1 for each 10 or less
Resistors for field rheostat and discharge resistors for generators and exciters	See Table VII 17-5
Armatures of cargo winch D.C. motors	1 for 6 or more motors
Stators of cargo winch A.C. cage-rotor motors	1 for 6 or more motors
Rotors of cargo winch A.C. wound-rotor motors	1 for 6 or more motors
Slip-rings for electric propulsion machines	1 for each kind and size

Table VII 17-2
Additional Spare Parts for Steering Motor without Stand-by Motor or Motor-Generator

Description	No. of spare parts required
D.C. motor armature and motor generator armature, complete with shaft and coupling	1 for each size
Stator of squirrel carge induction motor	1 for each size
Rotor of wound rotor induction motor complete with shaft and coupling	1 for each size

Table VII 17-3
Spare Parts for Control Gear

Description	No. of spare parts required
Contact piece, arcing or wear parts	1 set for each 2 sets or less
Spring	1 for each 4 or less
Operating and shunt coils	1 for each 10 or less
Resistor of each kind and size	1 for each 10 or less
Fuse and its element	See Table VII 17-5
Lens and lamp bulb of pilot lamp	See Table VII 17-5

Table VII 17-4
Spare Parts for Brakes

Description	No. of spare parts required
Shoe lining and rivet	1 for each 4 or less
Spring	1 for each 4 or less
Coil	1 for each 10 or less

Table VII 17-5
Spare Parts for Switchboards and Panelboards

Description	No. of spare parts required
Fuse (non-renewable)	1 for each 1, up to 20
Fuse (renewable)	1 for each 10, up to 10
Fuse elements of renewable fuses	1 for each
Sparking contact	1 for each 1, up to 10
Spring	1 for each 1, up to 10
Complete trip element assembly	1 for each 10 identical breakers or less
Complete mould case, thermal type circuit breaker	1 for each group of 10 identical breakers or less
Potential coil	1 for each rating and type
Resistor	1 for each rating and type
Lens of Pilot and signal lamps	1 for each 10 similar lenses or less
Lamp bulb of pilot and signal lamps	1 for each 1 lamp

Chapter 18

Uninterruptible Power System

18.1 General

18.1.1 The requirements of this chapter apply to all uninterruptible power systems (UPS) intended to maintain essential services or provide emergency services.

18.1.2 UPS units are to be constructed in accordance with IEC 62040: Uninterruptible power systems (UPS) (all parts), or an acceptable and relevant National or International Standard.

18.1.3 The operation of a UPS is not to depend upon external services.

18.1.4 The type of UPS unit employed, whether off-line, line-interactive or on-line, is to be appropriate to the power supply requirements of the connected load equipment.

18.1.5 An external bypass, that is hardwired and manually operated, is to be provided for UPS to allow isolation of UPS for safety during maintenance and maintain continuity of load power.

18.1.6 UPS units are to be monitored and an audible and visual alarm is to be initiated in the navigating bridge or the engine control room, or an equivalent attended location for:

(a) power supply failure (voltage and frequency) to the connected load;

(b) earth fault;

(c) operation of battery protective device;

(d) battery discharge; and

(e) bypass in operation for on-line UPS units.

18.1.7 UPS units required to provide emergency services are to be suitably located for use in an emergency.

18.1.8 UPS units utilising valve-regulated sealed batteries may be located in compartments with standard marine or industrial electrical equipment provided that the arrangements comply with the requirements of ventilation arrangements in Chapter 6 of this Part. IEC 62040-1: Uninterruptible power systems (UPS) – Part 1: General and safety requirements for UPS, or an acceptable and relevant National or International Standard may be considered to satisfy the requirements above.

18.1.9 Output power is to be maintained for the duration required for the connected equipment.

18.1.10 The UPS battery capacity is, at all times, to be capable of supplying the designated loads for the time specified. Where it is proposed that additional circuits are connected to the UPS unit, details verifying that the UPS unit has adequate capacity are to be submitted for approval.

18.1.11 On restoration of the input power, the rating of the charge unit is to be sufficient to recharge the batteries while maintaining the output supply to the load equipment.

18.2 Testing and Inspection

18.2.1 Tests at the manufacturer's works or after installation on board are to include such tests necessary to demonstrate, to the Surveyor's satisfaction, the suitability of the UPS unit for its intended duty and location. As a minimum the following tests are required:

(a) a temperature rise test;

(b) battery capacity test;

(c) a ventilation rate test of the equipment housing and the space into which it is to be located. See Chapter 6.

(d) functional testing, including operation of alarms.

18.2.2 Where the supply is to be maintained without a break following a power input failure, this is to be verified after installation by practical testing.

Tel: *+886 2 25062711*
Fax: *+886 2 25074722*
E-mail: *cr.tp@crclass.org*
Website: *http://www.crclass.org*
© CR – All rights reserved

財團法人驗船中心
CR CLASSIFICATION SOCIETY

RULES FOR THE CONSTRUCTION AND CLASSIFICATION OF STEEL SHIPS 2022

PART VIII – AUTOMATIC OR REMOTE CONTROL AND MONITORING SYSTEMS

July 2022

財團法人驗船中心
CR CLASSIFICATION SOCIETY

RULES FOR THE CONSTRUCTION AND CLASSIFICATION OF STEEL SHIPS 2022

PART VIII – AUTOMATIC OR REMOTE CONTROL AND MONITORING SYSTEMS

July 2022

RULES FOR THE CONSTRUCTION AND CLASSIFICATION OF STEEL SHIPS

PART I CLASSIFICATION AND SURVEY

PART II HULL CONSTRUCTION AND EQUIPMENT

PART III SPECIAL SERVICE AND TYPE OF SHIPS

PART IV MACHINERY INSTALLATIONS – CONSTRUCTION AND SHAFTING

PART V BOILERS, PRESSURE VESSELS, THERMAL OIL HEATERS AND INCINERATORS

PART VI PIPING AND PUMPING SYSTEMS

PART VII ELECTRICAL INSTALLATIONS

PART VIII AUTOMATIC OR REMOTE CONTROL AND MONITORING SYSTEMS

PART IX FIRE PROTECTION, DETECTION AND EXTINCTION

PART X REFRIGERATED CARGO INSTALLATIONS

PART XI MATERIALS

PART XII WELDING

PART XIII NAVIGATIONAL SAFETY SYSTEMS

PART XIV GOAL-BASED SHIP CONSTRUCTION STANDARDS SHIPS

PART XV HULL CONSTRUCTION AND EQUIPMENT FOR SHIPS LESS THAN 90 M IN LENGTH

List of major changes in Part VIII from 2019 edition

1.1	Amend No.2	3.8~3.13	Amend No.2
1.2	Amend No.2	Table VIII 3-1	Amend No.2
2.1	Amend No.2	Table VIII 3-2	Amend No.2
2.2.3 & 2.2.7	Amend No.2	Fig. VIII 3-1	Amend No.2
2.2.8	Amend No.2	4.1	Amend No.2
2.3	Amend No.2	4.2	Amend No.2
2.3.6	Amend No.2	4.3.3(b)	Amend No.2
2.3.10	Amend No.2	4.4.1	Amend No.2
2.3.11	Amend No.2	4.5	Amend No.2
2.4	Amend No.2	4.6	Amend No.2
2.5 & 2.6	Amend No.2	4.10	Amend No.2
2.6	Amend No.2	4.11	Amend No.2
2.7	Amend No.2	4.14.1(a)	Amend No.2
2.8	Amend No.2	4.15	Amend No.2
2.9	Amend No.2	Table VIII 4-2	Amend No.2
2.8	Amend No.2	Table VIII 4-3	Amend No.2
2.10	Amend No.2	Table VIII 4-4	Amend No.2
2.11	Amend No.2	Table VIII 4-5A	Amend No.2
Table VIII 2-1	Amend No.2	Table VIII 4-5B	Amend No.2
Table VIII 2-2	Amend No.2	Table VIII 4-6	Amend No.2
Chapter 3	Amend No.2	Table VIII 4-7	Amend No.2
3.1	Amend No.2	Table VIII 4-8	Amend No.2
3.2	Amend No.2	Table VIII 4-9	Amend No.2
3.3	Amend No.2	Table VIII 4-10	Amend No.2
3.4	Amend No.2	5.3	Amend No.2
3.5	Amend No.2	5.5	Amend No.2
3.6	Amend No.2	5.11.1	Amend No.2
3.7	Amend No.2	5.13	Amend No.2

6.2~6.3	Amend No.2	Table VIII 7-1 ~7-5	Amend No.2
7.1~7.9	Amend No.2	Table VIII 7-6	Amend No.2
7.10	Amend No.2	Chapter 8	Amend No.2
7.2	Amend No.2		

Acronyms

AIS	Automatic Identification System
ANTS	Automatic Navigation and Track-keeping System
ARPA	Automatic Radar Plotting Aid
BC Code	Code of Safe Practice for Solid Bulk Cargoes
BNWAS	Bridge Navigational Watch Alarm System
CA	Controlled Atmosphere
CDI	Chemical Distribution Institute
COW	Crude Oil Washing
CPA	Closest Point of Approach
CPP	Controllable Pitch Propeller
CSC	International Convention for Safe Containers
CSR	Common Structural Rules
CTOD	Crack Tip Opening Displacement
ECDIS	Electronic Chart Display and Information System
EEBD	Emergency Escape Breathing Devices
ENC	Electronic Navigational Chart
ESP	Enhance Survey Plan
ETA	Emergency Towing Arrangement
FEU	Forty-foot Equivalent Unit
FMEA	Failure Mode & Effect Analysis
FRP, GRP	Fibreglass Reinforced Plastics
FTP Code	International Code for Application of Fire Test Procedures
GBS	Goal-Based ship construction Standards
GDC	General Dry Cargo
GLONASS	Global Navigation Satellite System
GMDSS	Global Maritime Distress and Safety System
GPS	Global Positioning System
HAZ	Heat Affected Zone
HHP anchor	High Holding Power anchor
HSC	High Speed Craft
HTS	High Tensile Steel
IACS	International Association of Classification Societies
IBC Code	International Code for the Construction and Equipment of Ships Carrying Dangerous Chemicals in Bulk

ICS	The International Chamber of Shipping
IEC	International Electrotechnical Commission
IGC Code	International Code for the Construction and Equipment of Ships Carrying Liquefied Gases in Bulk
ILO	International Labour Organization
IMDG Code	International Maritime Dangerous Goods Code
IMO	International Maritime Organization
ISO	International Standards Organization
LAN	Local Area Network
LCS	Loading Computer System
LEL	Lower Explosive Limit
LRIT	Long-range Identification and Tracking of ships
MARPOL	International Convention for the Prevention of Pollution from Ships
MARVS	Maximum Allowable Relief Valve Setting
MEPC	Marine Environment Protection Committee
MLC	Maritime Labour Convention
MSC	Maritime Safety Committee
NDT	Nondestructive Testing
OCIMF	The Oil Companies International Marine Forum
OOW	Officer Of the Watch
PA	Public Address
PMA	Permanent Means of Access
PMS	Planned Machinery Maintenance Scheme
RH	Relative Humidity
PSPC	Performance Standard for Protective Coating
SENC	System Electronic Navigational Chart
SHHP anchor	Super High Holding Power anchor
SOLAS	International Convention for the Safety of Life at Sea
SRE	Ship Recycling
STCW	International Convention on Standards of Training, Certification and Watch-keeping for Seafarers
STS operation	Ship-To-Ship operation
S-VDR	Simplified Voyage Data Recorder
TCPA	Time to CPA
TEU	Twenty-foot Equivalent Unit
THD	Total Harmonic Distortion

TMCP	Thermo-Mechanical Controlled Processing
UPS	Uninterruptible Power Supply
VDR	Voyage Data Recorder
VEC	Vapor Emission Control

RULES FOR THE CONSTRUCTION AND CLASSIFICATION OF STEEL SHIPS

PART VIII
AUTOMATIC OR REMOTE CONTROL AND MONITORING SYSTEMS

CONTENTS

Chapter 1 General Requirements 1

1.1 General 1
1.2 Plans and Data 2
1.3 Tests and Surveys 4

Chapter 2 Systems Design and Arrangements 5

2.1 General 5
2.2 Automatic or Remote Control Systems 5
2.3 Monitoring/Alarm Systems 5
2.4 Safety Systems 6
2.5 Emergency Shutdown Systems 7
2.6 Automatic Safety Shutdown 7
2.7 Remote Propulsion Control System Requirements 8
2.8 Remote Propulsion Control on Navigation Bridge 9
2.9 Remote Propulsion Control Station Other than Navigation Bridge 10
2.10 Supply, Arrangement and System Protection of Automatic or Remote Control and Monitoring Systems 11
2.11 Equipment Construction, Design and Installation 12
2.12 Equipment/Components Qualifications and Trials 14

Chapter 3 Computer-based Systems 24

3.1 General 24
3.2 Systems Requirements 24
3.3 Systems Configuration 25
3.4 Software 25
3.5 Hardware 25
3.6 Data Communication 26
3.7 On Board Use and Application of Computer-based Systems 28

Chapter 4 Machinery Operated from a Centralized Control Station – CAS Symbol..... 36

4.1 General..... 36
4.2 Station in Navigating Bridge 36
4.3 Centralized Control and Monitoring Station..... 37
4.4 Power Supply for Control and Monitoring Systems 37
4.5 Continuity of Power..... 37
4.6 Propulsion Auxiliaries..... 38
4.7 Propulsion Steam Turbines 38
4.8 Propulsion Gas Turbines..... 38
4.9 Propulsion Diesel Engines 38
4.10 Electric Propulsion..... 38
4.11 Auxiliary Turbines and Diesel Engines..... 39
4.12 Oil Fired Boilers Associated with Propulsion and Electrical Power Generating Machinery 39
4.13 Fuel Oil Settling and Daily Service Tanks 39
4.14 Arrangement and Monitoring of Machinery Space..... 39
4.15 Sea Trials 40

Chapter 5 Unattended Machinery Spaces – CAU Symbol 61

5.1 General..... 61
5.2 Automatic Controls..... 61
5.3 Station in Navigating Bridge 61
5.4 Centralized Control and Monitoring Station..... 62
5.5 Continuity of Power..... 62
5.6 Propulsion Steam Turbine..... 63
5.7 Propulsion Diesel Engines 63
5.8 Oil Fired Boilers Associated with Propulsion..... 63
5.9 Fuel Settling and Daily Service Tanks 64
5.10 Propulsion and Associated Machinery Start-up 65
5.11 Monitoring Station in Engineer's Accommodation 65
5.12 Fire-fighting Station and Arrangements for Propulsion Machinery-space Fires..... 65
5.13 Communications 66
5.14 Sea Trials 66

Chapter 6 Machinery Operated from Navigating Bridge – CAB Symbol 67

6.1 General..... 67
6.2 Station in Navigating Bridge 67
6.3 Centralized Monitoring Station..... 67
6.4 Communications 67
6.5 Sea Trials 67

Chapter 7 Automatic or Remote Control Systems for Other Machinery/Systems..... 68

7.1 Centralized System for Cargo and Ballast Water Handling 68
7.2 Valve Remote Control System 69

Chapter 8 Integrated Automation System 72

8.1 Definitions 72
8.2 System Requirements 72
8.3 FMEA 72
8.4 Documentation 73

Chapter 1
General Requirements

1.1 General

1.1.1 When it is desired to fit with control and monitoring systems having one or more control stations and embodying various degrees of automatic or remote control and monitoring of the propulsion machinery, propulsion machinery space, and other machinery and systems are to meet the requirements contained in this part to assure operation as effective as could be obtained with the same systems arranged for manual control and monitoring by watch-keeping. The requirements for automation or remote control and monitoring systems are detailed in the following chapters:

(a) Chapter 1 deals with general requirements and provides the required submittals of automation systems

(b) Chapter 2 provides the essential features requirements which are all generic requirements for control system, monitoring/alarm system, safety system, power supply, remote propulsion control on navigation bridge and other than on navigation bridge.

(c) Chapter 3 provides requirements for computer-based systems which include system categories, software and hardware requirements.

(d) Chapter 4 provides requirements for **CAS** symbol.

(e) Chapter 5 provides requirements for **CAU** symbol.

(f) Chapter 6 provides requirements for **CAB** symbol.

(g) Chapter 7 provides requirements for other automatic or remote control and monitoring systems.

(h) Chapter 8 provides requirements for integrated automation system

1.1.2 Automation symbol

Automatic or remote control and monitoring systems for propulsion machinery and monitoring systems for propulsion-machinery space that comply with the requirements in Chapter 1 through Chapter 6, as applicable, will be distinguished in the Register as follows:

(a) **CAS** symbol

Where, in lieu of manning the propulsion machinery space locally, it is intended to control and monitor the propulsion and auxiliary machinery by qualified personnel from a continuously manned centralized control station, the provisions of chapter 4 are to be complied with. And upon verification of compliance, the class symbol **CAS** will be assigned.

(b) **CAU** symbol

Where it is intended that propulsion machinery space be periodically unmanned and that propulsion machinery be controlled from the navigation bridge and a centralized location, the provisions of chapter 5 are to be complied with. And upon verification of compliance, the class symbol **CAU** will be assigned.

(c) **CAB** symbol

Where it is intended that propulsion machinery space be periodically unmanned and that propulsion machinery be controlled from the navigation bridge, the provisions of chapter 6 are to be complied with. And upon verification of compliance, the class symbol **CAB** will be assigned.

1.1.3 Consideration is to be given to automatic or remote control and monitoring systems for propulsion machinery and monitoring systems for propulsion-machinery space with details and arrangements in accordance with other recognized standards provided they are not less effective.

1.2 Plans and Data

The following plans and data are to be submitted for review, as applicable.

1.2.1 Specifications

A general description of the operation of the system is to be provided. This is to include the system configuration, general arrangements for the ship and the layout of the propulsion machinery with essential auxiliaries, specifications of main equipment with information of manufacturer's name, type, rating and number of the equipment.

1.2.2 System Design Plans

(a) Propulsion Control System

(i) Schematic diagrams showing connections between all main components (units, modules) of the system, human machine interfaces (HMI) and interfaces with other systems.

(1) Propulsion control stations (e.g. from navigation bridge, centralized control station, etc.)

(2) Type and size of propulsion prime movers and auxiliary machinery and electric propulsion motors (if applicable)

(3) Independent local manual control

(4) Shaft turning gear interlocking arrangements

(5) Propulsion manual emergency shutdown

(6) Control station instrumentation

(7) Communications systems

(8) Essential auxiliary machinery and their controls, such as electrical power generating plant, hydraulic or pneumatic power generation, storage, vital auxiliary pumps, etc.

(9) Power supply arrangement

(ii) Operational descriptions for the following items:

(1) Starting of propulsion machinery

(2) Control transfer

(3) Critical speeds

(4) Essential auxiliary machinery automatic starting arrangement if fitted

(5) Power management arrangements where specially required by the Rules

(b) Propulsion Machinery Safety System

Safety systems descriptions may include a list of all monitored parameters with settings for implemented protective actions (e.g., automatic shutdown and automatic slowdown), schematic diagrams showing the connections between the safety devices, control and display units, alarm devices, human machine interface (HMI) and power supply arrangement, as appropriate, and operational descriptions for the following items:

(i) Initiation of automatic shutdown

(ii) Initiation of automatic slowdown

(iii) Initiation of automatic starting of standby units

(iv) Override of automatic shutdown

(v) Override of automatic slowdown

(vi) Re-start of propulsion machinery

(c) Propulsion Machinery Monitoring System

Schematic diagrams showing the connections between the sensing devices, control and display units, alarm devices, human machine interfaces (HMI) and power supply arrangement, and description of monitoring systems including a list of alarms and displays including preset parameters for the propulsion machinery and all essential auxiliary machinery and systems the following stations:

(i) Centralized control station alarm and instrumentation

(ii) Monitoring station in the engineers accommodation

(iii) Navigation bridge instrumentation

(d) Failure Modes and Effect Analysis (FMEA)

The FMEA as required, is to contain at least the following:

(i) System block diagrams showing system breakdown and components of interests.

(ii) A tabulation of the following:

(1) Systems and components of interests

(2) Potential failures modes

(3) Predictable cause associated with each failure mode

(4) Failure detection means

(5) Responses of the system to the failures

(6) Possible consequences of the failures

(7) Conclusions, comments or recommendations

(e) Programmable Electronic System (PES)

The following are to be submitted as appropriate:

(i) Block diagram showing the system configuration including the user interface, description of hardware specifications, hardware FMEA, fail-safe features, security arrangements, power supply, and independence of systems (control, monitoring and safety shutdown).

(ii) Software logic flow chart, description of software functions, self-test features and documentation on quality standard of software development and testing.

(iii) Calculations and/or methods used to determine the Worst Case Response Time (WCRT) for Table VIII 3-1 Category III Systems' alarms with respect to design data volume and CPU(s) capability including: data communication protocol(s) and the Worst Case Execution Time (WCET) of the alarm processing task(s). This requirement is also applicable to Category III Systems reduced to Category II, due to independent effective back up or other means of averting danger for the control functions (such as mitigation of alarms missing deadlines).

(iv) For integrated systems, the documentation is to be submitted to verify independence of the regular alarm, control and safety functions for each of the essential services. Refer to 1.2.2(d), 3.2.11, 3.6.1(b), 8.2, 8.3 and 8.4 of the Rules.

(v) For documentation of software and hardware, refer to Table VIII 3-2.

The complete system testing plan is to be specified and submitted before the hardware and software test will be carried out. The testing plan is to at least include test schedule, test levels according to different system categories and test cases.

(f) Wireless Data Communication Equipment

The following documentation is to be submitted for wireless data communication equipment.

(i) Documentation which demonstrates that the wireless data communication equipment provides an improvement in the safety of the ship, compared to wired data communication.

(ii) General details of the wireless system and equipment.

(iii) Risk analysis.

(iv) Evidence of type testing.

(v) On-board test schedule.

(vi) Details of manufacturer's recommended installation and maintenance practices. Network plan with arrangement and type of antennas and identification of location. Details of the wireless data communication network.

(vii) Specification of wireless communication system protocols and management functions.

(viii) Details of radio-frequency and power levels.

(ix) For functions that are provided with an alternative means of control, a description of the functions and a description of the alternative means of control.

(g) Equipment Plans

Schematic diagrams with a list of major electrical, electronic, hydraulic and pneumatic equipment / components (including manufacturer's names, model names, material, ratings, degree of protection and permissible angles of inclination), function descriptions, construction plans, outline view and elevation details, certificates or test reports as appropriate at testing to the suitability to the intended services and operating conditions in compliance with the environmental criteria set forth in 2.12.

(i) Navigation bridge console

(ii) Centralized control and monitoring console

(iii) Safety systems and devices

(iv) Computer based systems

(v) Hydraulic equipment

(vi) Pnuematic equipment

(h) Installation Plans

(i) Installation Arrangements

Locations of centralized control station and remote control stations on the navigation bridge; arrangements of the centralized control station containing control consoles and other equipment, including glass windows, doors, and ventilation fitting, as applicable.

(ii) Electrical One-line Diagrams

Type, size and protection of cables between control and monitoring equipment.

(iii) Installation Methods

Installation methods for all power and automatic or remote control and monitoring (electrical, pneumatic and hydraulic). This is to include details of cable or pipe runs, separation of cables of different voltage rating and insulating rating, cable tray laying, deck or bulkhead penetration, prevention of magnetic interference, etc.

1.3 Tests and Surveys

1.3.1 Installation Tests

Automatic or remote control and monitoring systems are to be subjected to tests witnessed by the Surveyor during and after installation onboard as outlined in this Part.

1.3.2 Periodical Surveys

The continuance of certification is subject to periodic survey of the automatic or remote control and monitoring systems installation as outlined in Part I.

Chapter 2

Systems Design and Arrangements

2.1 General

The requirements of this chapter apply to control systems, monitoring systems, alarm systems, safety systems, and automatic or remote controls on board ships, where fitted.

2.2 Automatic or Remote Control Systems

2.2.1 Automatic or remote control systems are to be of the fail-safe type and designed to preclude detrimental mechanical or thermal overloads to the controlled machinery.

2.2.2 To preclude damage to the controlled machinery, means are to be fitted to disable the starting mechanism after designated unsuccessful starting attempts. Similarly controlled machinery or systems fitted with more than one remote control station are to be provided with interlocking means to preclude simultaneous control or unauthorized transfer to associated remote stations not in control. However, control units interconnected with a specific associated remote control station and which are within sight of each other, may be accepted without interlocks.

2.2.3 Transfer of controls from a remote control station under operation to other associated remote stations is to be possible by a request from the receiving station and acceptance by the station in operation, or vice versa. See 2.8.6(c) for propulsion control systems. All control stations are to have indicators showing which station is in control.

2.2.4 Automatic control systems are to be designed to maintain the controlled machinery within pre-set parameters and to ensure the machinery operation in the correct sequence and time intervals. Deviation from these pre-set conditions is to force the sequential controls to a safe sequence stage that will not be detrimental to the machinery and overall safety of the vessel. Additionally, adequate arrangements are to be included to disable the automatic control mode and restore manual controls at the associated remote control station.

2.2.5 Remote controls are to be arranged to provide the same degree of safety and operability as those provided for local controls. Upon a given control input, the controlled device is to respond according to a pre-established sequence of events and results. Any discrepancy between the desired control action and the final state or position of the controlled device is to release an alarm at the associated station in control and, where provided, at the centralized control and monitoring station.

2.2.6 Remotely operated machinery or systems are to be provided with effective means of independent controls at or in the proximity to the machinery or systems. Means are to be provided locally to disconnect or override other associated remote stations or disable automatic control, if any.

2.2.7 Equipment associated with automatic or remote control systems is to be suitable for the intended location. Control systems associated with propulsion related machinery/systems are to comply with the requirements contained in 2.11 and 2.12 of this Part.

2.2.8 Systems performing different functions (e.g., monitoring systems, control systems, and safety systems) are to be, as much as practicable, independent of each other such that a single failure in one will not render the others inoperative. Specifically, the shutdown function of the safety system is to be independent of control and monitoring systems. Common sensors will be acceptable for any functions other than shutdown functions and automatic start/changeover of the required pumps as listed in Table VIII 4-3 through Table VIII 4-7.

2.3 Monitoring/Alarm Systems

2.3.1 Alarm systems are to be of the self-monitoring type and designed so that a fault in the alarm system is to cause it to fail to the alarmed condition. Additionally, they are not to react to normal transient conditions or spurious signals. Alarm systems are to be independent of control and safety systems.

2.3.2 Alarms are to be both audible and visual and are to be provided at the control stations, as required in this part. Alarms are to clearly identify the system and service of the faulted machinery or machinery components.

2.3.3 Visual alarms are to be displayed in a distinguishable manner such that alarms for similar machinery or systems are grouped together and the colors representing a particular function or condition remain uniform. Visual alarms are to flash when first activated.

2.3.4 Audible alarms associated with machinery are to be of distinctive tone from other alarms such as fire-alarm, general emergency alarm, gas detection, etc. and they are to be of sufficient loudness to attract the attention of duty personnel; for spaces of unusual high noise levels, a beacon light or similar, installed in a conspicuous place is to supplement any of the audible alarms in such spaces; however, red light beacons are only to be used for fire alarms. A fault in the visual alarm circuits is not to affect the operation of the audible alarm circuits.

2.3.5 Alarms are to be acknowledged by manually changing the flashing display of the incoming alarm to a steady display and by silencing the audible signal; the steady state light display is to remain activated until the fault condition is rectified. Alarming of other faults that may occur during the acknowledgment process is not to be suppressed by such action and is to be alarmed and displayed accordingly.

2.3.6 Acknowledgement shall be possible only from the local controls or the centralized control position station. The silencing of the alarm at an associated remote control station is not to automatically mute and steady, or acknowledge, the same alarm signals at the centralized control station.

2.3.7 Alarm circuits may be temporarily disabled for maintenance purposes or during initial start-up of machinery provided that such action is clearly indicated at the associated station in control and, where such station is provided, at the centralized control and monitoring station. However, such alarm is to be automatically re-activated after a preset time period.

2.3.8 When individual alarms are displayed and alarmed at a centralized control and monitoring station, the visual alarms may be displayed and alarmed at other associated remote control stations as summary-alarms.

2.3.9 Alarm systems are to be provided with effective means for testing all audible and visual alarms and indicating lamps without disrupting the normal machinery or system operation. Such means are to be fitted in the associated remote stations.

2.3.10 Equipment associated with automatic or remote alarm systems is to be suitable for the intended location. Alarm systems associated with propulsion related machinery/systems are to comply with the requirements contained in 2.11 and 2.12 of this Part.

2.3.11 As much as practicable, a fault in the visual alarm circuits is not to affect the operation of the audible alarm circuits.

2.4 Safety Systems

2.4.1 Safety systems are to be provided as required in this part. Considerations will be given to the manual activation of safety systems provided that measures are taken, by the inherent design of the systems or by suitable arrangements, to retard the escalation of the abnormal condition and to alert personnel to take the appropriate action prior to the developing of a dangerous condition.

2.4.2 Safety systems are to be of the fail-safe type and are to respond automatically to fault conditions that may endanger the machinery or safety of the crew. Unless otherwise required in this part or specially approved, this automatic action is to cause the machinery to take the least drastic action first, as appropriate, by reducing its normal operating output or switching to a stand-by machinery and last, by stopping it, i.e., disrupting source of fuel or power supply, etc.

2.4.3 Safety systems for different parts of the machinery plant are to be independent of each other. The safety system intended for the functions of shutdown is to be completely independent of the control and alarms systems so that a failure in these systems will not prevent the safety system from operating. However, for the function of reducing the

output of the machinery and starting of standby units, complete independence of the safety systems from the control and alarm systems is not required.

2.4.4 Each safety action is to be alarmed at the associated remote station. However, where a centralized control and monitoring station is fitted, individual alarms are to be provided at that station; in which case, a summary-alarm for the specific safety system will be acceptable at other associated remote stations. When both an alarm and a safety action are required for a specific failure condition, the alarm is to be activated first.

2.4.5 Machinery that is stopped as a result of a safety action, is not to resume operation unless it is reset manually.

2.4.6 Remote overrides are not to override those safety actions specified in other part of the Rules. For safety action specified in this chapter, any overrides of safety provisions are to be so arranged that they cannot go unnoticed and their activation and condition are to be alarmed and indicated at the associated remote station. The override is to be arranged to preclude inadvertent operations and is not to deactivate alarms associated with safety provisions. The override mechanism to disconnect safety provisions is to be fitted at the associated remote station except that where a centralized control and monitoring station is fitted, the override mechanism may be fitted at the centralized station instead. Overrides fitted on the bridge are to be operable only when in the bridge control mode.

2.4.7 Equipment associated with safety systems is to be suitable for the intended location. Safety systems associated with propulsion related machinery/systems are to comply with the requirements contained in 2.11 and 2.12 of this Part.

2.5 Emergency Shutdown Systems

2.5.1 Emergency shutdown systems are to be of the fail-safe type. The manually activated emergency shutdown systems, which are provided for the propulsion machinery and other machinery/systems within the machinery plant, are to be operable independently of each other's systems.

2.5.2 Activation of a specific shutdown system is to be accomplished only by the deliberate action of the operator and is to be arranged so as to prevent its inadvertent operation.

2.6 Automatic Safety Shutdown

To avert rapid deterioration of propulsion and auxiliary machinery, the following automatic shutdowns are to be provided, regardless of the mode of control: manual, remote or automatic. These shutdowns are not to be fitted with manual override.

2.6.1 For all diesel engines:

(a) Overspeed

(b) Lube oil system failure

2.6.2 For all gas turbines

(a) Failure of lubricating oil system

(b) Failure of flame or ignition

(c) High exhaust gas temperature

(d) High compressor vacuum

(e) Overspeed

(f) Excessive vibration

(g) Excessive axial displacement of rotors

2.6.3 For all steam turbines:

(a) Failure of lubricating oil system

(b) Overspeed

(c) Back-pressure for auxiliary turbines

2.6.4 For all boilers:

(a) Failure of flame

(b) Failure of flame scanner

(c) Low water level

(d) Failure of forced draft pressure

(e) Failure of control power

2.6.5 For propulsion reduction gears:

(a) Shutdown prime movers upon failure of reduction gear lubricating oil system.

(b) Where prime movers are diesel engines, shutdown is mandatory for high speed or medium speed diesel engines coupled to a reduction gear.

2.6.6 For generators:

(a) For generators fitted with forced lubrication system only: shutdown prime movers upon failure of generator lubricating oil system

2.6.7 For propulsion DC motor

(a) Overspeed

2.7 Remote Propulsion Control System Requirements

2.7.1 Propulsion and Maneuvering Application

The provisions of this section are applicable:

(a) Where it is intended that the propulsion machinery be directly controlled from the navigation bridge or from any remote propulsion control station within or outside the propulsion machinery space;

(b) Where, in lieu of manning the propulsion machinery space locally, it is intended to monitor it and to control and monitor the propulsion and auxiliary machinery by qualified personnel from a continuously manned centralized control station; or

(c) Where it is intended that the propulsion machinery space be periodically unmanned. Provisions for remote control of steering gears and of athwartship or positioning thrusters are given in 4.2 of Part IV and 10.4 of Part IV, respectively.

2.7.2 General Requirements

The remote propulsion control station is to be:

(a) As effective as local control

(b) Provided with control of speed and direction of thrust of the propeller

(c) Provided with instrumentation sufficient to provide the operator with information about the state of the propulsion machinery and the control system itself

2.7.3 System Design

In general, conceptual requirements in 2.2 are to be applied. Further requirements are provided in 2.4, 2.8, and 2.9.

2.7.4 System Power Supply

(a) Power Source

The requirement of power source is to comply with 2.10.

2.8 Remote Propulsion Control on Navigation Bridge

2.8.1 General

Where propulsion machinery is to be controlled from the navigation bridge, means for control and monitoring are to be as provided in Table VIII 2-1. The following control and monitoring features are also to be provided. These requirements do not apply to bridge wing propulsion control stations.

2.8.2 Propeller Control

The speed, direction of thrust and, where applicable, the pitch of the propeller, are to be fully controllable from the navigation bridge under all sailing conditions, including maneuvering. The control is to be performed by a single control device for each independent propeller, with automatic performance of all associated services, including, where necessary, means of preventing overload of the propulsion machinery. Where multiple propellers are designed to operate simultaneously, they may be controlled by one control device.

2.8.3 Ordered Speed and Direction

When under navigation bridge control, ordered speed and direction of propulsion machinery, including pitch of propellers, where applicable, are to be indicated at the local propulsion machinery control position, and at the centralized control station if fitted.

2.8.4 Emergency Shutdown

A manually operated emergency-stopping device for the propulsion machinery is to be provided on the navigation bridge. This device is to be independent of the remote propulsion control system. The shutdown may only be activated by the deliberate action of the operator, and is to be so arranged as to prevent its inadvertent operation.

2.8.5 Starting of Propulsion Machinery

Where it is necessary to restart the propulsion machinery in order to reverse it to go astern, means to start the propulsion machinery is to be provided on the navigation bridge. In such cases, and in other cases where propulsion machinery can be started from a remote control station, the following are to be provided:

(a) An alarm to indicate a low level starting medium energy condition (e.g. a low starting air pressure) which is to be set at a level to permit further starting operation.

(b) A display to indicate starting medium energy level (e.g. starting air pressure).

(c) Where automatic starting of the propulsion machinery is fitted, the number of consecutive automatic attempts is to be limited in order to safeguard sufficient capacity for local manual starting.

(d) Starting of the propulsion machinery is to be automatically inhibited where conditions exist which may damage the propulsion machinery (e.g., shaft-turning gear engaged, insufficient lubricating oil pressure, etc.). The activation of such inhibition is to be alarmed at the remote control station.

2.8.6 Transfer Between Remote Control Stations

Remote control of the propulsion machinery is to be possible only from one location at a time. At each location there is to be an indicator showing which location is in control of the propulsion machinery. The following protocol is to be observed for transfer of control between stations:

(a) The transfer of propulsion control between stations is to take effect only with acknowledgment by the receiving station. This, however, does not apply to transfer of control between the centralized control station and the local manual control.

(b) The transfer of propulsion control between the navigation bridge and the propulsion machinery space is to be possible only in the propulsion machinery space (i.e. at either the centralized control station or the local manual control position).

(c) The centralized control station as required for **CAS** per Chapter 4 of this part or engine room remote propulsion control station, if fitted (see 2.7), is to be capable of assuming propulsion control at any time or blocking orders from other remote control stations. However, where special operating requirements of the ship prevail, override control over the centralized control station will be considered.

Notes:

Special consideration upon submittal of proposal should address where engine room takeover is not desired taking into account the following, as applicable:

(i) Mission deck over the side operations

(ii) Azimuth drives providing both propulsion and steering control

(iii) Itemized alarms in the navigation bridge instead of the required summary alarm for **CAU** per Line E1 of Table VIII 2-1.

(iv) **DPS** class notation where all thruster controls are to be available to the DP operator at all times

(v) **CAU** unattended machinery spaces

(vi) Proximity of distance between the remote control station and local controls

(vii) The proposal may subject to flag State acceptance with respect to the requirements of the governmental authority whose flag the ship flies.

(d) Propeller speed and direction of thrust are to be prevented from altering significantly when propulsion control is transferred from one control station to another.

2.8.7 Local Manual Control

Means are to be provided for local manual control so that satisfactory operation of the propulsion machinery can be exercised for lengthy periods in the event of the failure of the remote propulsion control system. For this purpose, indicators for propeller speed and direction of rotation (for fixed pitch propellers) or pitch position (for controllable pitch propellers) are to be provided at this local manual control station. The means of communication as required by 2.5 of Part VII is to be fitted also at this manual control station. It is also to be possible to control auxiliary machinery, which are essential for propulsion and safety of the ship, at or near the machinery concerned.

2.8.8 Communications Systems

For communication systems associated with propulsion control stations, the requirements in 2.5 of Part VII are applicable.

2.9 Remote Propulsion Control Station Other than Navigation Bridge

2.9.1 General

Where remote propulsion control station is provided at a location other than the navigation bridge, such station is to comply with requirements applicable to that at the navigation bridge, with the exception of the provision of telegraph.

2.9.2 Propulsion Machinery Space

Remote propulsion control stations fitted in ships having the propulsion machinery space manned are to be provided with the alarms, displays and controls as listed in Table VIII 2-1, items A1 through C2 as a minimum.

Where a remote propulsion control station is provided in or in the vicinity of the propulsion machinery space for the purpose of full remote operation of a locally manned propulsion machinery space, such a station is to be fitted with:

(a) Remote propulsion control station as in 2.9.1

(b) Alarms, displays and controls as required in Table VIII 4-2

(c) Alarms and displays of Table VIII 4-3 through Table VIII 4-10, as applicable.

2.10 Supply, Arrangement and System Protection of Automatic or Remote Control and Monitoring Systems

2.10.1 Supply and Arrangement

(a) The requirements contained in 2.10.1 are applicable to propulsion systems. The power distribution to control systems, alarm/display systems (considered as one for the purpose of this requirement) and safety systems is to be provided with their individual circuits so that a fault in one of the systems cannot cause loss of the other systems. Their supply status and failure condition is to be displayed and alarmed at the associated remote propulsion station.

(b) The supply circuits in 2.10.1(a) may be either connected directly to the main switch-board or supplied via a common supply feeder connected to the main switchboard. The power supply status and failure condition of each of the circuits in 2.10.1(a) is to be monitored on the load side of the feeder's protective device. Additionally, automatic or remote control and monitoring systems that may require constant power supply are to be provided with an uninterruptible power supply (UPS) system of sufficient capacity to cover the required main power transition period. See 3.2.2 of this Part.

(c) The hydraulic pumps for control and monitoring systems are to be fitted in duplicate. The pump suctions are to be from a reservoir of sufficient capacity to contain all the fluid when drained from the system, maintain the fluid level at an effective working height and allow air and foreign matter to separate out. The pump suctions are to be sized and positioned to prevent cavitations or starvation of pump. A duplex filter which can be cleaned without interrupting the oil supply is to be fitted on the discharge side of pumps. The hydraulic fluid is to be suitable for its intended operation.

(d) Compressed air for control and monitoring systems is to be available from at least two air compressors. The starting air system may be used as a source of control air. The air pressure to the pneumatic control or display system is to be automatically maintained at a level required for the operation of the installation. Means to prevent the accumulation of moisture is to be provided. Additionally, means are to be provided to assure the supply, from a safe area, of clean, dry and oil-free air to the pneumatic controls or displays.

2.10.2 System Protection

(a) Electrical

Circuits are to be arranged so that a fault in one circuit will not cause maloperation or failure on another circuit or system. It is to be possible to isolate the faulted circuit. Additionally, systems are to be protected against accidental reversal of power supply polarities, voltage spikes and harmonic interference, and in no case is the system's total harmonic distortion to exceed 5%.

(b) Hydraulic

Pipe systems subject to pressure build-up that may exceed the rated pressure of the pipe and associated components are to be provided with suitable pressure relief devices fitted on the pump's discharge side. Each relief valve is to be capable of relieving not less than full pump flow with a maximum pressure rise of not more than 10% of the relief valve setting.

(c) Pneumatic

The requirements in 2.10.2(b) are to be complied with, as applicable.

2.11 Equipment Construction, Design and Installation

2.11.1 General

Equipment associated with remote or automatic control and monitoring of propulsion related machinery/ systems is to meet compliance with the requirements contained herein. Deviation from the environmental requirements such as temperature, humidity and corrosion will be considered for equipment intended for installation in ambient controlled rooms or enclosures. See also 2.11.5(b), 2.11.5(g) and 2.11.5(h). Similarly, where equipment is installed in environments having parameters other than those as specified in Table VIII 2-2, i.e., cryogenic or highly corrosive environments, etc., special consideration corresponding to those of the operating environment will be required.

2.11.2 Electrical

(a) Equipment is to be constructed of robust, durable and flame-retardant material. It is to be designed to incorporate the degree of enclosure protection as required of Equipment location.

(b) Circuits are to be designed to permit the isolation of a fault while maintaining functionality of the remaining circuits or sub components, i.e., using printed circuit cards, or modules, etc., and are to allow the easy and safe replacement of the faulted portion of the circuit. Replaceable parts are to be arranged so that it will not be possible to connect them incorrectly or use incorrect replacements.

(c) Panels, cabinets, consoles, etc., are to be preferably self-supported with sides and back suitably protected. The arrangement of alarms, displays and control devices are to be laid out in a functional and logical manner so that it will allow the operator the easy and clear identification of each of the machinery or systems to be represented or included therein. Grouping of alike machinery or system devices, and the use of labels and color schemes are some of the methods to realize this intent. Precautions are to be taken to avoid the inadvertent operation of controls that may lead to critical situations, i.e., location of handles, recessed or covered switches, sequential operation, etc.

(d) Internal wiring is to be of the stranded type and its connection is to be designed not to become loose as a result of vibration effects; the use of connectors crimped on the wire insulation and connectors of the captive type such as the ring or flanged spade type is preferred. Direct soldered connections on printed circuit cards are to be avoided. Non-current carrying metal parts are to be effectively grounded.

2.11.3 Hydraulic

Hydraulic pumps, actuators, motors and accessories are to be suitable for the intended service, compatible with the working fluid and are to be designed to operate safely at full-power conditions.In general, the hydraulic fluid is to be non-flammable or have a flash point above 157°C.

2.11.4 Pneumatic

Air compressors, actuators, motors and accessories are to be suitable for the intended service and have working and other parts that will not be damaged or rendered ineffective by corrosion.

2.11.5 Installations

(a) General

The installation of equipment associated with automatic or remote control and monitoring systems is to be carried out taking into consideration adverse effects that may be introduced by their exposure to unintended temperatures, weather, vibration conditions, falling objects or liquid, electromagnetic interference, high voltage systems, electric noise, etc. Additionally, the installation is to facilitate the checking, adjustment and replacement of components, including filters and sensing devices, without disrupting the normal operation of the system, as far as practicable.

(b) Ranges in ambient temperatures

For the selection and installation of equipment associated with control and monitoring systems, the following ranges in ambient temperatures are to be considered:

(i) 5°C to 55°C For machinery space, control rooms, accommodations and navigating bridge.

(ii) –25°C to 55°C For pump rooms, hold rooms and rooms with no heating.

When equipment is located inside panels or cubicles, consideration is to be given to the temperature rise inside those panels due to the dissipation of heat from its own components. See also Note 1 of Table VIII 2-2. Where compliance with the above temperature ranges cannot be met, consideration will be given to the installation of equipment per 2.11.5(g) and 2.11.5(h).

(c) Electromagnetic and conductance interference

In general, the installation of equipment associated with automatic or remote control and monitoring systems in areas of unusual electromagnetic sources is to be avoided. Where the values per Table VIII 2-2 may be exceeded, appropriate measures are to be implemented to reduce the effects of electromagnetic and conductance interference. To avoid electromagnetic noise caused by circulating currents, the conductive shield and cable armor is to be grounded only at one end of the cable. Description of the preventive measures to be followed is to be submitted for review.

(d) Shielded cables

To avoid possible signal interference, cables for automatic or remote control and monitoring systems occupying the same cable tray, trunk or conduit with power cables are to be of the shielded type.

(e) Electrical grounding

Automatic or remote control and monitoring systems are not to have common ground conductors with systems of higher voltage level.

(f) Condensation

Electrical equipment liable to be exposed to ambient temperature fluctuations is to be provided with means to prevent accumulation of moisture inside the component's enclosure, i.e., by the provisions of space heaters that automatically energizes upon shutdown or disconnection of the electrical component.

(g) Cold environment

Electrical equipment which may be adversely affected by the exposure to temperatures lower than those for which they are designed for, is to be provided with suitable heating arrangements so that they may be readily operated when needed. See 2.11.5(b).

(h) Ambient controlled spaces or enclosures

Electrical equipment installed within ambient controlled spaces and enclosures such as consoles, cabinets, etc., is to be suitable for the ambient temperature expected therein. However, where air cooling systems are introduced to maintain the ambient temperature of the space and/or enclosure within the prescribed component's temperature parameters, the following need to be complied with:

(i) The cooling system is to be of a sufficient capacity to maintain the required ambient temperature taking into account all heating sources installed in the space and/or enclosure.

(ii) A standby cooling system of required capacity is to be provided and arranged to automatically be brought up on-line upon failure of the operating cooling system.

(iii) Failure of the cooling system is to activate a visual and audible alarm locally.

(i) Protection against falling liquids or leakage of fluid medium

Electrical equipment is not to be installed in the same compartment or cabinet containing equipment or pipes carrying water, oil or steam unless effective measures are taken in order to protect the electrical equipment from possible fluid leakage, i.e., welded connections, physical isolation together with suitable draining arrangements, etc.

(j) Measuring and sensing devices

The installation of measuring and sensing elements is to permit their easy access for functional testing or replacement.

(k) Marking

All units, controllers, actuators, displays, terminal strips, cable and test points, etc. are to be clearly and permanently marked. Their systems and system's functions are to be included so that they can be easily identified in associated drawings and instrument lists.

2.12 Equipment/Components Qualifications and Trials

2.12.1 Equipment/Components Qualifications

The manufacturers and assemblers of automatic or remote control and monitoring equipment/components associated with propulsion related machinery/systems are to provide documented evidence showing that the equipment /components have been tested individually or by acceptable sampling to establish their suitability for the intended service. The requirements in 4.1.2 are applicable to equipment/components associated with propulsion related machinery/systems intended for installation onboard **CAS**, **CAU** or **CAB** classed vessels.

2.12.2 Type Approval of Automatic or Remote Control and Monitoring Equipment

Equipment that meets the requirements contained in this Part or 4.1.2 is eligible to be certified by the Society upon formal request by the equipment manufacturer.

2.12.3 Testing and inspection

Automatic or remote control and monitoring equipment/component which is intended for installation on ships assigned classification symbols **CAS**, **CAU** or **CAB** is to be tested in accordance with 4.1.2(a).

2.12.4 Automatic or remote control and monitoring equipment/component which is intended for installation on ships not assigned classification symbols **CAS**, **CAU** or **CAB** is to be performance tested in accordance with 4.1.2(a)(iv).

2.12.5 Trials

(a) Automatic/Remote Control

The ability to effectively control the propulsion from the remote propulsion control station is to be demonstrated to the satisfaction of the Surveyor during sea trials or at dockside. These trials are to include propulsion control transfer, propulsion starting, verification of propulsion control responses, propulsion control power failure, actuation of propulsion emergency stop device (if station is installed in the navigating bridge) and for turbine-driven ship, actuation of the shaft-turning device.

(b) Independent Manual Control

Independent manual control of the propulsion machinery is to be demonstrated during the tests or trials to the satisfaction of the Surveyor. This is to include demonstration of independent manual control through the full maneuvering range and transfer from automatic control.

Table VIII 2-1
Instrumentation and Controllers on Remote Propulsion Control Stations

System	Monitored/Controlled Parameter		A	D	C	Notes: [A = Alarm; D = Display; C = Controller/Actuator] [x = applies]
Propulsion control & monitoring	A1	Propeller speed		x	x	
	A2	Propeller direction		x	x	
	A3	Propeller pitch		x	x	As applicable
	A4	Telegraph		x	x	Not applicable to certain ships < 500 GT,
	A5	Emergency shutdown of propulsion engine			x	To be protected from accidental tripping
	A6	Starting of propulsion engine			x	For reversible engines only
	A7	Stored starting energy level -low	x	x		For reversible engines and engines fitted with means of starting at remote control station
	A8	Inhibition of starting of propulsion engine	x			Where remote engine starting is fitted
	A9	Automatic shutdown activated	x			
	A10	Automatic slowdown activated	x			If provided
	A11	Safety system override	x	x	x	If fitted. To be of a design that cannot be left activated
	A12	Shaft turning gear engaged		x		To automatically inhibit starting of engine
	A13	Operating in barred speed range	x			For navigation bridge only
	A14	Threshold warning for safety systems activations	x			
System monitoring	B1	Power source -fails	x	x		For non-**CAS** ships, the failure alarm is applicable to main power source only. For **CAS** ships, applicable to main and emergency power sources.
	B2	Individual power supply to control, monitoring and safety systems -fails	x	x		Alarm may be common.
	B3	Alarm system -disconnected		x		
	B4	Integrated computer-based system: data highway abnormal conditions	x			Alarm is to be activated before critical data overload.
	B5	Integrated computer-based system: duplicated data link -failure of one link	x			
Others	C1	Control station transfer		x	x	Display: to indicate the station in control. Control: to provide 1) transfer switch & 2) acknowledgment switch.
	C2	Air conditioning system -fails	x			If necessary for equipment environment control
Additional requirements for Navigation Bridge for ships assigned with **CAS**						
CAS	D1	Propulsion-Prime movers, prolonged operation within critical speed range	x			Visual display may be acceptable
	D2	Fire pump- Start/stop switch			x	Not required if fire MAIN is maintained pressurized
	D3	Shaft turning- Propeller shaft roll-over (not rotating)	x			For steam turbine-driven vessels. See 4.7.4
Additional requirements for Navigation Bridge for ships assigned with **CAU**, **CAB**						
CAU,**CAB**	E1	Summary alarms -activated by alarm conditions in Table VIII 4-2 through Table 4-9	x			
	E2	High voltage rotating machine -Stationary windings temperature -high	x			14.3.2 of Part VII
	E3	Controllable pitch propeller hydraulic power unit run/start/stop		x	x	If standby unit is provided with automatic starting, such starting is to be alarmed.
	E4	Steam turbine automatic shaft rollover -		x	x	Control: to deactivate

		activated				automatic shaft rollover.
	E5	Steam turbine shaft stopped -in excess of set period	x			
	E6	Boiler steam pressure -low	x			For propulsion and associated electric power generating machinery
	E7	Boiler control power -failure	x			For propulsion and associated electric power generating machinery
	E8	System power source: main and emergency feeder -status and failure	x	x		
	E9	Propulsion machinery space -fire detected	x			
	E10	Start main fire pump and pressurize fire main		x	x	
	E11	Propulsion machinery space -bilge level high	x			
	E12	Start/stop and transfer switches			x	For **CAB** ships having nonintegrated propulsion machinery

Display = display of the analog or digital signal for the monitored parameter. The display of the signal is to provide indication of the monitored parameter in engineering units (such as degrees, PSI, RPM, etc.) or status indication. The engineering unit is to effectively display the relevant information concerning the monitored parameter. An alternative engineering unit which provides equivalent effectiveness, may be considered.

Table VIII 2-2
Environmental Tests for Control and Monitoring Equipment

No	Test	Procedure according to (4)	Test parameters	Other information
1	Visual Inspection	–	–	– Conformance to drawings, design data; – quality of workmanship and construction.
2	Power supply variations (electric)	–	*AC supply* Combination / voltage Variation Permanent (%) / frequency variation permanent (%) 1 / + 6 / +5 2 / + 6 / –5 3 / –10 / –5 4 / –10 / +5 Combination / voltage Transient 1.5s (%) / frequency transient 5s (%) 5 / +20 / +10 6 / –20 / –10 *DC supply* Voltage tolerance continuous ±10% Voltage cyclic variation 5% Voltage ripple 10% Electric battery supply: – +30% to –25% for equipment connected to charging battery or as determined by the charging /discharging characteristics, including ripple voltage from the charging device; – +20% to –25% for equipment not connected to the battery during charging.	Verification of: – equipment behaviour upon loss and restoration of supply; – possible corruption of programme or data held in programmable electronic systems, where applicable.
	Power suppply variations (pneumatic and hydraulic)		Pressure:±20% Duration:15minutes.	
3	Dry heat	IEC Publication 60068-2-2	Temperature: 55° ± 2°C Duration: 16 hours or Temperature: 70°C ± 2°C Duration: 16 hours (1)	– Equipment operating during conditioning and testing; – functional test during the last hour of the test temperature; – For equipment specified for increased temperature the dry heat test is to be conducted at the agreed test temperature and duration.
		IEC Publication 60068-2-2 Test Be for heat dissipating equipment	Temperature: 55° ± 2°C Duration: 16 hours or Temperature: 70°C ± 2°C Duration: 16 hours (1)	– Equipment operating during conditioning and testing with cooling system on if provided; – Functional test during the last hour of the test temperature; – For equipment specified for increased temperature the dry heat test is to be conducted at the agreed test temperature and duration.

No	Test	Procedure according to (4)	Test parameters	Other information
4	Damp heat	IEC Publication 60068-2-30 Test D_b.	Temperature: 55°C Humidity: 95% Duration: 2 cycles 2 × (12 + 12 hours)	– Measurement of insulation resistance before test; – the test shall start with 25°C ± 3°C and at least 95% humidity; – equipment operating during complete first cycle and switched off during second cycle except for functional test; – functional test during the first 2 hours of the first cycle at the test temperature and during the last 2 hours of the second cycle at the test temperature. Duration of the second cycle can be extended due to more convenient handling of the functional test; – recovery at standard atmosphere conditions; – insulation resistance measurements and performance test.
5	Cold	IEC Publication 60068-2-1	Temperature: +5°C ± 3°C Duration: 2 hours or Temperature: −25°C ± 3°C Duration: 2 hours (2)	– Initial measurement of insulation resistance; – equipment not operating during conditioning and testing except for functional test; – functional test during last hour at the test temperature; – insulation resistance measurement and the functional test after recovery
6	Salt mist	IEC Publication 60068-2-52 Test K_b	Four spraying periods with a storage of 7 days after each.	– Initial measurement of insulation resistance and initial functional test; – equipment not operating during conditioning; – functional test on the 7th day of each storage period; – insulation resistance measurement and performance test 4 to 6h after recovery. (3) – On completion of exposure, the equipment shall be examined to verify that deterioration or corrosion (if any) is superficial in nature.
7	Insulation resistance	–	Rated Supply Voltage (V) / Test voltage (V) / Minimum insulation resistance Before test (M ohms) / After test (M ohms) Un≤65 / 2 Un (min. 24V) / 10 / 1.0 Un>65 / 500 / 100 / 10	– Insulation resistance test is to be carried out before and after: damp heat test, cold test, salt mist test and high voltage test; – between all phases and earth, and where appropriate, between the phases; – Un is the rated (nominal) voltage. Note: Certain components e.g. for EMC protection may be required to be disconnected for this test. For high voltage equipment reference is made to Chapter 14 of Part VII

No	Test	Procedure according to (4)	Test parameters	Other information
8	High voltage	–	Rated voltage Un (V) / Test voltage (A.C. voltage 50 or 60 Hz) (V) up to 65 / 2 Un + 500 66 to 250 / 1,500 251 to 500 / 2,000 501 to 690 / 2,500	– Separate circuits are to be tested against each other and all circuits connected with each other tested against earth; – printed circuits with electronic components may be removed during the test; – period of application of the test voltage: 1 minute.
9	Electrostatic discharge	IEC Publication 61000-4 -2	Contact discharge : 6 kV Air discharge: 2 kV, 4 kV, 8 kV Interval between single discharge: 1 sec. Number of pulses: 10 per polarity According to test level 3.	– To simulate electrostatic discharge as may occur when persons touch the appliance; – the test is to be confined to the points and surfaces that can normally be reached by the operator; – Performance criterion B (5).
10	Electromagnetic field	IEC Publication 61000-4-3	Frequency range: 80MHz to 6 GHz Modulation*: 80%AM at 1,000Hz Field strength: 10 V/m Frequency sweep rate: ≤1.5 × 10^{-3} decades/sec. (or 1%/3 sec) According to test level 3.	– To simulate electromagnetic fields radiated by different transmitter; – the test is to be confined to the appliance exposed to direct radiation by transmitters at their place of installation; – Performance criterion A (6) *****_If for test of equipment an input signal with a modulation frequency of 1000 Hz is necessary ,a modulation frequency of 400Hz may be chosen._ – If an equipment is intended to receive radio signals for the purpose of radio communication (e.g. Wi-Fi router, remote radio controller), then the immunity limits at its communication frequency do not apply, subject to the requirements in 3.6.2
11	Conducted Low frequency	IEC Publication 60533	AC Frequency range: rated frequency to 200th harmonic. Test voltage(r.m.s): 10% of supply to 15th harmonic reducing to 1% at 100th harmonic and maintain this level to the 200th harmonic, min 3V r.m.s., max 2 W. DC Frequency range: 50 Hz - 10kHz Test voltage(r.m.s): 10% of supply, maximum 2W.	– To simulate distortions in the power supply system generated for instance, by electronic consumers and coupled in as harmonics; – Performance criterion A (6). – See Fig. VIII 2-1, Test Set-Up. – For keeping max. 2 W, the voltage of the test signal may be lower.
12	Conducted radio frequency	IEC Publication 61000-4-6	AC, DC, I/O ports and signal/control lines: Frequency range: 150 kHz - 80 MHz Amplitude: 3 V r.m.s (7) Modulation**: 80%AM at 1,000Hz Frequency sweep rate: ≤ 1.5 × 10^{-3} decades/sec. (or 1%/3 sec.) According to test level 2.	– Equipment design and the choice of material is to simulate electromagnetic fields coupled as high frequency into the test specimen via the connecting lines; – Performance criterion A (6). ****** _If for test of equipment an input signal with a modulation frequency of 1000 Hz is necessary, a modulation frequency of 400Hz may be chosen._

No	Test	Procedure according to (4)	Test parameters	Other information
13	Burst / Electrical fast transients	IEC Publication 61000-4-4	Single pulse time: 5 ns (between 10% and 90% value) Single pulse width: 50ns(50% value) Amplitude (peak): 2kV line on power supply port/earth; 1kV on I/O data control and communication ports (coupling clamp); Pulse period: 300ms; Burst duration: 15ms; Duration/polarity: 5 min. According to test level 3.	– Arcs generated when actuating electrical contacts; – Interface effect occurring on the power supply, as well as at the external wiring of the test specimen; – Performance criterion B (5).
14	Surge	IEC Publication 61000-4-5	Test applicable to AC and DC power ports Open-circuit voltage: Pulse rise time: 1.2 μs (front time) Pulse width: 50 μs (time to half value) Amplitude (peak): 1kV line/earth; 0.5kV line/line; Short-circuit current: Pulse rise time: 8 μs (front time) Pulse width: 20 μs (time to half value) Repetition rate: ≥ 1 pulse/min. Number of pulses: 5 per polarity Application: continuous According to test level 2.	– Interference generated for instance, by switching "ON" and "OFF" high power inductive consumers; – Test procedure in accordance with figure 10 of the standard for equipment where power and signal lines are identical; – Performance criterion B (5).
15	Radiated emission	CISPR 16-2-3 IEC 60945 for 156-165 MHz	Limits below 1000 MHz For equipment installed in the bridge and deck zone. Frequency range: Limits: 0.15-0.3 MHz 80-52 dB μV/m 0.3-30 MHz 50-34 dB μV/m 30-1,000 MHz 54 dB μV/m except for: 156-165 MHz 24 dB μV/m For equipment installed in the general power distribution zone. Frequency range: Limits: 0.15-30 MHz 80-50 dB μV/m 30–100 MHz 60-54 dB μV/m 100-2,000 MHz 54 dB μV/m except for: 156-165 MHz 24 dB μV/m	– Procedure in accordance with the standard but distance 3 m between equipment and antenna; – For the frequency band 156 MHz to 165 MHz the measurement shall be recorded with a receiver bandwidth of 9 kHz (as per IEC 60945) Alternatively, the radiation limit at a distance of 3 m from the enclosure port over the frequency 156 MHz to 165 MHz shall be 30 dB micro-V/m peak (as per IEC 60945)
			Limits above 1000 MHz Frequency range: Average Limits: 1000-6000 MHz 54 dBμV/m	– Procedure in accordance with the standard (distance 3 m between equipment and antenna) Equipment intended to transmit radio signals for the purpose of radio communication (e.g. Wi-Fi router, remote radio controller) may be exempted from limit, within its communication frequency range, subject to the requirements in 3.6.2
16	Conducted emission	CISPR 16-2-1	Test applicable to AC and DC power ports For equipment installed in the bridge area and deck zone. Frequency range: Limits: 10-150 kHz 96-50 dB μV 150-350 kHz 60-50 dB μV 350 kHz - 30 MHz 50 dB μV For equipment installed in the general power distribution zone. Frequency range: Limits: 10-150 kHz 120-69 dB μV 150-500 kHz 79 dB μV 0.5-30 MHz 73 dB μV	

No	Test	Procedure according to (4)	Test parameters	Other information
17	Flame retardant	IEC Publication 60092-101 or IEC Publication 60695-11-5	Flame application: 5 times 15 sec. each. Interval between each application: 15 sec. or 1 time 30 sec. Test criteria based upon application. The test is performed with the EUT or housing of the EUT applying needle-flame test method.	– In the burnt out or damaged part of the specimen by not more than 60 mm long. – no flame, no incandescence or – in the event of a flame or incandescence being present, it is to extinguish itself within 30 s of the removal of the needle flame without full combustion of the test specimen. – any dripping material is to extinguish itself in such a way as not to ignite a wrapping tissue. The drip height is 200 mm ± 5 mm.
18	Vibration	IEC Publication 60068-2-6 Test F_C	2.0 (+3/–0) Hz to 13.2 Hz – amplitude ± 1 mm. 13.2 Hz to 100 Hz – acceleration ± 0.7 g. For severe vibration conditions such as, e.g. on diesel engines, air compressors, etc.: 2.0 Hz to 25 Hz – amplitude ± 1.6 mm 25.0 Hz to 100 Hz – acceleration ±4.0 g. *Note: More severe conditions may exist for example on exhaust manifolds of diesel engines especially for medium and high speed engines. Values may be required to be in these cases 40 Hz to 2000 Hz-acceleration ±10.0g at 600°C, duration 90 min.*	– Duration in case of no resonance condition 90 minutes at 30 Hz; – duration at each resonance frequency at which Q ≥ 2 is recorded – 90 minutes; – during the vibration test, functional tests are to be carried out; – test to be carried out in 3 mutually perpendicular planes; – it is recommended as guidance that Q does not exceed 5. –where sweep test is to be carried out instead of the discrete frequency test and a number of resonant frequencies is detected close to each other, duration of the test is to be 120 min. Sweep over a restricted frequency range between 0.8 and 1.2 times the critical frequencies can be used where appropriate. Note: Critical frequency is a frequency at which the equipment being tested may exhibit: – malfunction and/or performance deterioration – mechanical resonances and/or other response effects occur, e.g. chatter

No	Test	Procedure according to (4)	Test parameters	Other information
19	Inclination	IEC Publication 60092-504	Static 22.5° Dynamic 22.5°	a) Inclined at an angle of at least 22.5° to the vertical. b) inclined at least 22.5° on the other side of the vertical and in the same plane as in (a). c) inclined at an angle of at least 22.5° to the vertical and in a plane at right angle to that used in (a). d) inclined to at least 22.5° on the other side of the vertical and in the same plane as in (c). Note: The period of testing in each position is to be sufficient to fully evaluate the behavior of the equipment. Using the direction defined in a) to d) above, the equipment is to be rolled to an angle of 22.5° each side of the vertical with a period of 10 seconds. The test in each direction is to be carried out for not less than 15 minutes. On ships for the carriage of liquified gases and chemicals, the emergency power supply is to remain operational with the ship flooded up to a maximum final athwart ship inclination of 30°. Note: These inclination tests are normally not required for equipment with no moving parts.

Notes:

(1) Equipment to be mounted in consoles, housing etc. together with other heat dissipating power equipment are to be tested with 70°C.

(2) For equipment installed in non-weather protected locations or cold locations test is to be carried out at –25°C.

(3) Salt mist test is to be carried out for equipment installed in weather exposed areas.

(4) Alternative equivalent testing procedures may be accepted provided the requirements in the other columns are complied with.

(5) Performance criterion B (for transient phenomena): The equipment under test is to continuous to operate as intended after the tests. No degradation of performance or loss of function is allowed as defined in the technical specification published by the manufacturer. During the test, degradation or loss of function or performance which is self-recoverable is however allowed but no change of actual operating state or stored data is allowed.

(6) Performance criterion A (for continuous phenomena): The requirement under test is to continuous to operate as intended during and after test. No degradation of performance or loss is allowed as defined in relevant equipment stardard the technical specification published by the manufacturer.

(7) For equipment installed on the bridge and deck zone, the test levels are to be increased to 10V rms for spot frequencies in accordance with IEC 60945 at 2,3,4, 6.2,8.2,12.6,16.5,18.8,22,25 MHz.

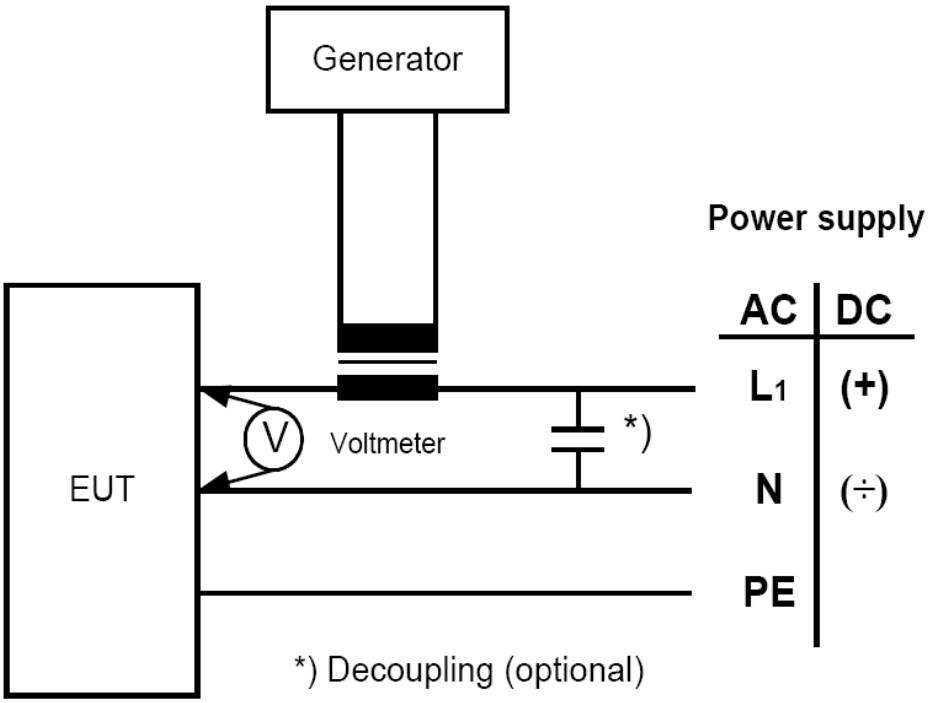

Fig. VIII 2-1
Test Set-Up — Conducted Low Frequency Test

Chapter 3

Computer-based Systems

3.1 General

3.1.1 Computer based systems where used for control, monitoring, safety, or internal communication systems are to comply with the provisions of this chapter, and are subject to the classification requirements regardless of **CAS**, **CAU** or **CAB** symbol. Navigation systems, Radio-communication systems and vessel loading instrument/stability computer are not in the scope of this chapter.

3.2 Systems Requirements

3.2.1 System Security

Programmable electronic systems are to be provided with effective physical and/or logical security arrangements to prevent unintentional or unauthorized access to functions or alteration of configuration, programs or data by unauthorized personnel (see 3.7.10). Alteration of parameters that may affect the system's performance are to be limited to authorized personnel by means of keyswitch, keycard, password or other approved methods.

3.2.2 Program and Memory Data

To preclude the possible loss or corruption of data as a result of power disruption, programs and associated memory data considered to be essential for the operation of the specific system are to be stored in non-volatile memory or a volatile memory with a secure uninterruptible power supply (UPS).

3.2.3 Start-up After Power Failure

The system's software and hardware is to be designed so that upon restoration of power supply after power failure, automatic or remote control and monitoring capabilities can immediately be available after the pre-established computer control access (sign-in) procedure has been completed.

3.2.4 Self-Monitoring

(a) Function

Computer-based systems are to be self-monitoring and any incorrect operation or abnormal condition is to be alarmed at the computer work station.

(b) Temperature

The processing hardware (CPU, microprocessor etc.) of computer-based systems is to be designed to operate satisfactorily at an ambient temperature of 55°C, preferably without forced ventilation. Where forced ventilation is necessary, an alarm warning of high temperature in the processing hardware is to be given.

3.2.5 Power Supply

The power supply is to be monitored for voltage failure and protected for short circuit. Where redundant computer systems are provided to satisfy 3.2.6, they are to be separately fed.

3.2.6 System Independence

Control, monitoring and safety systems are to be arranged such that a single failure or malfunction of the computer equipment will not affect more than one of these system functions. This is to be achieved by dedicated equipment for each of these functions within a single system, or by the provision of redundancy, or by other suitable means considered not less effective.

3.2.7 Response Time

Computer system's memory is to be of sufficient capacity to handle the operation of all computer programs as configured in the computer system. The time response for processing and transmitting data is to be such that an undesirable chain of events may not arise as a result of unacceptable data delay or response time during the computer system's worst data overload operating condition. For propulsion related system applications, the time limit on response

delays for safety and alarm displays is not to exceed 2 seconds. (The response delay is to be taken as the time between detection of an alarm or safety critical condition and the display of the alarm or actuation of the safety system.)

3.2.8 Fail-safe

Computer-based system is to be designed such that failure of any of the system's components will not cause unsafe operation of the process or the equipment it controls. Hardware and software serving vital and non-vital systems are to be arranged to give priority to vital systems.

3.2.9 Modifications

A significant modification is a modification which influences the functionality and/or safety of the system. Any significant modification to the software or hardware for system category II and III is to be submitted for approval. In addition, modifications of parameters for system Category III by the manufacturer are to be approved by the Society.

3.2.10 Emergency Stops

Emergency stops, where required, are to be hard-wired and independent of any computer-based system.

3.2.11 Failure Mode and Effect Analysis (FMEA)

FMEA is to be used to determine that any component failure will not result in the complete loss of control, the unsafe shutdown of the process or equipment, or other undesirable consequences (see 3.7.4).

3.3 Systems Configuration

3.3.1 System Categories

Computer-based systems subject to classification requirements are to be assigned into the appropriate system category (I, II or III) according to the possible extent of the damage that may be caused by a single failure within the computer-based systems and the effect on system functionality, as shown in Table VIII 3-1.

3.4 Software

3.4.1 General

Software lifecycle activities, e.g. design, development, supply and maintenance, are to be carried out in accordance with an acceptable quality management system which has lifecycle models suitable to the nature of the software project, considering its size, complexity, safety, risk and integrity. Project specific software quality plans are to be submitted. These are to demonstrate that the provisions of ISO/IEC 90003: Software engineering – Guidelines for the application of ISO 9001:2008 to computer software, or equivalent, are incorporated. The plans are to define responsibilities for the lifecycle activities, including verification, validation, software module testing and, integration with other components or systems and security policies to be applied.

3.5 Hardware

3.5.1 Design for Ease of Maintenance

The design and layout of the hardware is to ensure ease of access to interchangeable parts for repairs and maintenance. Each replaceable part is to be simple to replace and is to be constructed for easy and safe handling. All replaceable parts are to be so designed that it is not possible to connect them incorrectly or to use incorrect replacements. Where this is not practicable, the replaceable parts, their mounting location, including their means of electrical connection, are to be clearly marked.

3.5.2 User Interface and Input Devices

(a) General

Input devices are to have clearly marked functions and, as far as practicable, are to be arranged to avoid conceivable inadvertent errors in their operations.

(b) Security

Input devices, such as keyboard, which can be used to effect changes to equipment or processes under control, are to be provided with security arrangement, such as password, so as to limit access to authorized personnel only. Where a single action of, for example, pressing of a key is able to cause dangerous operating conditions or malfunctions, measures are to be taken to prevent execution by a single action such as use of two or more keys.

(c) Control Status

Where control action can be effected from more than one station, conflicting control station actions are to be prevented by means of interlock or warning. Control status is to be indicated at all stations.

3.5.3 Visual Display Unit

(a) General

The size, color and density of text and graphic information displayed on a visual display unit are to be such that it may be easily read from the normal operator position under all operational lighting conditions. The brightness and contrast are to be capable of being adjusted.

(b) Alarm Display

Where alarms are displayed by means of visual display unit, they are to appear in the sequence as the incoming signals are received. Alarming of the incoming fault signals are to appear on the screen regardless of the mode the computer or the visual display unit is in.

(c) Propulsion Monitoring

Where a computer is used as the operator interface to display monitored parameters, the centralized control station is to be provided with at least 2 computers, including keyboards and monitors, unless other means of display are provided capable of displaying the same information.

(d) Color Monitor

The failure of a primary color is not to prevent an alarm to be distinctly indicated.

3.5.4 Graphical Display

(a) General

Information is to be presented clearly and intelligibly according to its functional relations. Display presentations are to be restricted to the data which is directly relevant for the user.

(b) Alarms

Alarms are to be clearly distinguishable from other information and are to be visually and audibly presented with priority over other information regardless of the mode the computer or the visual display unit is in.

3.6 Data Communication

3.6.1 Data Communication

(a) Data Communication Network

(i) General

The requirements in 3.6.1 are applicable to the system of Category II and III using shared data communication network to transfer data between distributed programmable electronic equipment or systems.

(ii) Monitoring of the Network

The data communication network is to be continuously monitored to detect failures on the communication network itself and data communication failure on nodes connected to the network. Any

detected abnormal condition is to be alarmed at the centralized control station and on the navigation bridge.

(iii) Prevention of Overloading

Safeguards are to be provided to prevent unacceptable data transmission delays (overloading of network). Alarm is to be activated prior to a critical data overload condition.

(iv) Integrity of Data

Means are to be provided to ensure the integrity of data and provide timely recovery of corrupted or invalid data.

(b) Duplicated Data Communication Network

(i) Duplication of the Network

When the same data communication network is used for two or more essential functions (e.g., propulsion control and generator control), this network is to be duplicated, and each is to be routed as far apart from the other as practical. The duplicate network is for standby purpose only and not to be used to reduce traffic in the online network.

(ii) Monitoring of the Network

Duplicated data communication network is to be arranged so that upon the failure of the online network, the standby network is automatically connected to the system. Switching between duplicated networks is not to disturb data communication or continuous functioning of the system. The failure of one network is to be alarmed at the centralized control station and on the navigation bridge.

(c) Connection Failure

A complete failure in connectivity between component systems and the data highway is not to affect individual functionality of the component systems. Where a single component failure results in loss of data communication, means are to be provided to automatically restore data communication. Loss of a data communication network is not to affect the ability to operate essential services by.

3.6.2 Wireless Data Communication

Wireless data communication will be specially considered depending upon the purpose.

(a) Non-essential and Recreational Purposes, Entirely Within the Living Accommodations

Wireless data communication used for non-essential and recreational purposes, entirely within the living accommodations, will be specially considered provided it is demonstrated that there is no detrimental effect on essential services. Further documentation is to be submitted for review which demonstrates compliance with 3.6.2(c)(iv), 3.6.2(c)(v), and 3.6.2(c)(vi).

(b) Non-essential and Recreational Purposes

Wireless data communication used for non-essential and recreational purposes, within the living accommodations and outside of the living accommodations, will be specially considered provided there is no detrimental effect on essential services. Further documentation is to be submitted for review which demonstrates compliance with 3.6.2(c)(i) through 3.6.2(c)(vii).

(c) Ship Services (Non-Recreational Purposes)

Wireless data communication used for ship services (such as essential services, category I systems, category II systems, category III systems, etc.) will be specially considered provided the use of the wireless data communications results in an improvement in the safety of the ship, compared to wired data communication. Documentation which demonstrates an improvement in safety is to be submitted for review. Further documentation is to be submitted for review which demonstrates compliance with 3.6.2(c)(i) through 3.6.2(c)(vii).

Note:
For assignment of system categories, see 3.3.

(i) Risk Analysis

A suitable risk analysis (such as a Failure Modes and Effects Analysis (FMEA)) is to be performed which demonstrates that an interruption or failure in the wireless data communication will not lead to a hazardous situation.

Note:

Consideration is to be given to the possibility of corrupted data and intermittent failures with comparatively long recovery times between interruptions.

(ii) Type Testing

The wireless equipment is to meet the environmental type testing requirements of 2.12 and Table VIII 2-2 based on the proposed location of installation.

(iii) Wireless Data Communication Tests

The wireless data communication is to not cause interference with any ship systems. This is applicable to all wireless data communication equipment (even wireless data communication equipment for non-essential services). Tests during harbor and sea trials are to be conducted to demonstrate that radio-frequency transmission from wireless data communication equipment does not cause failure of any equipment and does not cause the wireless data communication equipment itself to fail as a result of electromagnetic interference during expected operating conditions.

(iv) Wireless Data Communication Network

The wireless data communication network is to meet the requirements of 8.2.3, 3.6.1(a), 3.6.1(b) and 3.6.1(c).

(v) Wireless System Protocols

Wireless data communication is to follow recognized international wireless system protocols that incorporate the following.

(1) Message integrity
Fault prevention, detection, diagnosis and correction so that the received message is not corrupted or altered when compared to the transmitted message.

(2) Configuration and device authentication
Only devices that are included in the wireless system are to permitted to connect to the wireless system.

(3) Message encryption
Protection of the confidentiality and criticality of the data content.

(4) Security management
Protection of network assets, prevention of unauthorized access to network assets.

(vi) Radio-Frequency and Power Level

The wireless system is to comply with the radiofrequency and power level requirements of the International Telecommunications Union and flag state requirements.

Note:

Consideration is to be given to system operation in the event of port state and local requirements that pertain to the use of radio-frequency transmission prohibiting the operation of a wireless data communication system due to radio-frequency and power level restrictions.

(vii) Alternative Means of Control

Functions that are required to operate continuously to provide essential services dependent on wireless data communication are to be provided with an alternative means of control that can be brought into action within an acceptable period of time.

3.7 On Board Use and Application of Computer-based Systems

3.7.1 References

The following identified standards can be used for the development of hardware/software of computer-based systems. Other industry standards may be considered:

(a) IEC 61508: Functional safety of electrical/electronic/programmable electronic safety-related systems

(b) ISO/IEC 12207: Systems and software engineering – Software life cycle processes

(c) ISO 9001:2008 Quality Management Systems – Requirements

(d) ISO/IEC 90003: Software engineering - Guidelines for the application of ISO 9001:2008 to computer software

(e) IEC 60092-504: Electrical installations in ships – Part 504: Special features – Control and instrumentation

(f) ISO/IEC 25000: Systems and software engineering – Systems and software Quality Requirements and Evaluation (SQuaRE) - Guide to SQuaRE

(g) ISO/IEC 25041: Systems and software engineering – Systems and software Quality Requirements and Evaluation (SQuaRE) - Evaluation guide for developers, acquirers and independent evaluators

(h) IEC 61511: Functional safety – Safety instrumented systems for the process industry sector

(i) ISO/IEC 15288: Systems and software engineering – system life cycle process

3.7.2 Definitions

(a) Stakeholders

(i) Owner

The Owner is the party responsible for contracting the system integrator and/or suppliers to provide a hardware system including software according to the owner's specification. The Owner could be the Ship Builder Integrator (Builder or Shipyard) during initial construction. After ship delivery, the owner may delegate some responsibilities to the ship operating company.

(ii) System Integrator

The role of system integrator is to be filled by the yard unless an alternative organization is specifically contracted for or assigned this responsibility. The system integrator is responsible for the integration of systems and products provided by suppliers into the system according to the requirements specified herein and for providing the integrated system. The system integrator may also be responsible for integration of systems in the ship. If there are multiple parties performing system integration at any one time a single party is to be responsible for overall system integration and coordinating the integration activities. If there are multiple stages of integration different System Integrators may be responsible for specific stages of integration.

(iii) Supplier

The Supplier is any contracted or subcontracted provider of system components or software under the coordination of the System Integrator or Shipyard. The supplier is responsible for providing programmable devices, sub-systems or systems to the system integrator. The supplier provides a description of the software functionality that meets the Owner's specification, applicable international and national standards, and the requirements specified herein.

(b) Objects

Fig. VIII 3-1 shows the hierarchy and relationships of a typical computer-based system.

(i) Object Definitions

(1) Ship

Ship or offshore unit where the system is to be installed.

(2) System
Combination of interacting programmable devices and/or sub-systems organized to perform one or more specified actions.

(3) Sub-system
Identifiable part of a system, which may perform a specific function or set of functions.

(4) Programmable Device
Physical component where software is installed.

(5) Software Module
A Software Module is a standalone group of program or code intended to accomplish a function.

(c) Simulation Tests

Control system testing where the equipment under control is partly or fully replaced with simulation tools, or where parts of the communication network and lines are replaced with simulation tools.

3.7.3 System Categories

(a) Systems Typically Belonging to Category III

(i) Propulsion system of a ship, meaning the means to generate and control mechanical thrust in order to move the ship (devices used only during maneuvering, such as bow thrusters, are not in the scope of this requirement)

(ii) Steering system control system

(iii) Electric power system (including power management system)

(iv) Ship safety systems covering fire detection and fighting, flooding detection and fighting, internal communication systems involved in evacuation phases, ship systems involved in operation of life saving appliances equipment

(v) Dynamic positioning system of equipment classes 2 and 3 according to IMO MSC/Circ.645 or MSC.1/Circ.1580.

(vi) Drilling systems

The exact category is dependent on the risk assessment for all operation scenarios.

(b) Systems Typically Belonging to Category II

(i) Liquid cargo transfer control system

(ii) Bilge level detection and associated control of pumps

(iii) Fuel oil treatment system

(iv) Ballast transfer valve remote control system

(v) Stabilization and ride control systems

(vi) Alarm and monitoring systems for propulsion systems

The exact category is dependent on the risk assessment for all operation scenarios.

Note: See the System Categories in Table VIII 3-1.

3.7.4 Risk Assessment of the System

This step to determine the risk to the system throughout the lifecycle by identifying and evaluating the hazards associated with each function of the system. This document is to normally be submitted by the System Integrator or the Supplier, including data coming from other suppliers. IEC/ISO 31010 Risk management – Risk assessment techniques may be applied in order to determine method of risk assessment. The method of risk assessment is to be agreed by the Society. Based on the risk assessment, a revised system category may be called for between the Society and the system supplier. Where the risks associated with a computer-based system are well understood, it is permissible for the risk assessment to be omitted. However, in such cases the supplier or the system integrator is to provide a justification for the omission. The justification should give consideration to:

(a) Manner in which the risks were discovered.

(b) The equivalence of the context of use of the current computer-based system and the computer-based system initially used to determine the risks.

(c) The adequacy of existing control measures in the current context of use.

3.7.5 Code Production and Testing

The following documentation is to be provided for Category II and III systems:

(a) Software modules functional description and associated hardware description for programmable devices. This is to be provided by the Supplier and System Integrator

(b) Evidence of verification (detection and correction of software errors) for software modules, in accordance with the selected software development standard. Evidence requirements of the selected software standard might differ depending on how critical the correct operation of the software is to the function it performs (i.e., IEC 61508 has different requirements depending on SILs, similar approaches are taken by other recognized standard). This is to be supplied by the Supplier and System Integrator.

(c) Evidence of functional tests for programmable devices at the software module, sub-system, and system level. This is to be supplied by the Supplier via the System Integrator. Functional testing is to be designed to test the provisions of features used by the software but provided by the operating system, function libraries, customized layer of software and any set of parameters.

3.7.6 Integration Testing before Installation on Board

Intra-system integration testing is to be performed between system and sub-system software modules before being integrated on board. The objective is to confirm that software functions are properly executed, that the software and the hardware it controls interact and function properly together and that software systems react properly in case of failures. Faults are to be simulated as realistically as possible to demonstrate appropriate system fault detection and system response. The results of any required failure analysis are to be observed. Functional and failure testing can be demonstrated by simulation tests.

(a) For Category II and III systems:
   (i) Test programs and procedures for functional tests and failure tests shall be submitted to the Society. A FMEA may be requested by the Society in order to support containment of failure tests programs.
   (ii) Factory acceptance test including functional and failure tests shall be witnessed by the Society.

(b) The following documentation is to be provided:
   (i) Functional description of software.
   (ii) List and versions of software installed in system.
   (iii) User manual including instructions for use during software maintenance.
   (iv) List of interfaces between system and other ship systems.
   (v) List of standards used for data links.
   (vi) Additional documentation as requested by this Society to demonstrate the adequacy of failure test case applied.

3.7.7 Approval of Programmable Devices for Category II and III

(a) Approval of programmable devices integrated inside a system is to be delivered to the system integrator or supplier. Approval can be granted on case by case basis, or as part of the Society Type Approval Program Limited approval: Sub-systems and programmable devices may be approved for limited applications with service restrictions by the Society when the ship system where they will be integrated is not known. In this case, requirements and additional drawings, details, tests reports and surveys related to the Standard declared by the Supplier may be required by the Society.

3.7.8 Final Integration and Onboard Testing

(a) Simulation tests are to be undertaken before installation, when it is found necessary to check safe interaction with other computerized systems and functions that could not be tested previously. Onboard tests are to confirm that a computer-based system in its final environment, integrated with all other systems with which it interacts:

(i) Performs the functions it was designed for

(ii) Reacts safely in case of failures originated internally or by devices external to the system

(iii) Interact safely with other systems implemented on board ship

(b) For final integration and onboard testing of Category II and III systems:

(i) Test specifications shall be submitted to the Society for approval

(ii) The tests shall be witnessed by the Surveyor

3.7.9 Modifications During Operation

(a) Responsibilities

Organizations in charge of software modifications are to be clearly declared by Owner to the Society. A System integrator is to be designated by the Owner and is to fulfil requirements mentioned in Chapter 3. Limited life cycle steps may be admitted for modifications already considered and accepted in the scope of initial approval.

At the ship level, it is the responsibility of Owner to manage traceability of these modifications; the achievement of this responsibility is to be supported by system integrators updating the Software Registry.

This Software Registry is to contain:

(i) List denoting types and versions of software installed in systems required in 3.7.6.

(ii) Results of security scans as described in 3.7.10.

(b) Change Management

The owner is to ensure that necessary procedures for software and hardware change management exist on board, and that any software modification/upgrade are performed according to the procedure. All changes to computer-based systems in the operational phase are to be recorded and be tracked.

3.7.10 System Security

The Owner, system integrator and suppliers are to adopt security policies and include them in their quality systems and procedures. For Category I, II, and III systems, physical and logical security measures are to be put in place to prevent unauthorized or unintentional modification of software, whether undertaken at the physical system or remotely. Prior to installation, all artefacts, software code, executables and the physical medium used for installation on the ship are to be scanned for viruses and malicious software. Results of the scan are to be documented and kept with the Software Registry.

3.7.11 Requirements for Data Links for Category II and III Systems

(a) General Requirements

(i) Loss of a data link is to be specifically addressed in risk assessment analysis.

(ii) A single failure in data link hardware is to be responded to automatically in order to restore the proper working of system. For Category III systems a single failure in data link hardware is not to influence the proper working of the system. See 3.6.1.

(iii) Characteristics of data link is to prevent overloading in any operational condition of system. See 3.6.1(a)(iv).

(iv) The data link is to be self-checking, detecting failures on the link itself and data communication failures on nodes connected to the link. Detected failures are to initiate an alarm. See 3.6.1.

(b) Specific Requirements for Wireless Data Links

(i) Category II Systems

Category III systems are not to use wireless data links unless specifically considered by the Society on the basis of an engineering analysis carried out in accordance with an International or National Standard acceptable to the Society. See Note in 3.6.2(c).

(ii) Other Categories of Systems

Other categories of systems may use wireless data links with requirements in 3.6.1(c)(vi), 3.6.1(c)(vii), and 3.6.1(c)(iv).

3.7.12 Quality System

System integrators and suppliers are to operate a quality system regarding software development and testing and associated hardware such as ISO 9001 taking into account ISO 90003. Satisfaction of this requirement is to be demonstrated by either the quality system being certified as compliant to the recognized standard by an organization with accreditation under a national accreditation scheme, or CR confirming compliance to the standard through a specific assessment.

This quality system is to include:

(a) Relevant procedures regarding responsibilities, system documentation, configuration management and competent staff.

(b) Relevant procedures regarding software lifecycle and associated hardware:

(i) Organization set in place for acquisition of related hardware and software from suppliers.

(ii) Organization set in place for software code writing and verification.

(iii) Organization set in place for system validation before integration in the ship.

(c) Approval of quality system:

(i) A specific procedure for verification of software code of Category II and III at the level of systems, sub-systems and programmable devices and modules.

(ii) Check points for Category II and III systems (see Table VIII 3-2).

(iii) Specific procedure for software modification and installation on board the ship defining interactions with owners.

3.7.13 Documents submission and test attendance

Documents submission and test attendance of computed-based systems are to be in accordance with Table VIII 3-2.

Table VIII 3-1
System Categories

System Category	Effect of Failure	Typical System Functionality
I	Failure will not lead to dangerous situations for human safety, safety of the ship and/or threat to the environment.	Monitoring function for informational/ administrative tasks
II	Failure could eventually lead to dangerous situations for human safety, safety of the ship and/or threat to the environment.	-Alarm and monitoring functions -Control functions that are necessary to maintain the ship in its normal operational and habitable conditions
III	Failure could immediately lead to dangerous situations for human safety, safety of the ship and/or threat to the environment.	-Control functions for maintaining the ship's propulsion and steering -Ship safety functions

Table VIII 3-2
Documents Submission and Test Attendance of Computed-Based Systems(7)

Requirement	Suppler involved	System integrator involved	Owner involved	Category I(4)	Category II	Category III
Quality Plan	X	X		A(5)	A(5)	A(5)
Risk assessment report		X		I(5)	I(5)	I(5)
Software modules functional description and associated hardware description	X (if necessary)	X			I	I
Evidence of verification of software code	X (if necessary)	X			I	I
Evidence of functional tests for elements included in systems of Category II and III at the level of software module, sub-system and system	X	X			I	I
Test programs and procedures for functional tests and failure tests including a supporting FMEA or equivalent, at the request of the Society		X			A	A
Factory acceptance test event including functional and failure tests	X	X			W	W
Test program for simulation tests for final integration		X			A	A
Simulation tests for final integration		X			W	W
Test program for on board tests (includes wireless network testing)		X			A	A
On board integration tests (includes wireless network testing)		X			W	W
List and versions of software installed in system ■ Functional description of software ■ User manual including instructions during software maintenance ■ List of interfaces between system and other ship systems		X			I	I
Updated Software		X	X		I	I

Registry						
Procedures and documentation related to Security Policy	X	X	X		I	I
Test reports according to 2.12	X	X		A (6)	A	A

Notes:

(1) I = Provided (For Information).

(2) A = Submitted (For Approval).

(3) W = To be witnessed by the Surveyor.

(4) Additional documentation may be required upon request.

(5) Upon request

(6) If in the scope of Class requirement

(7) Test after modifications for Category II and III depend on the level of modification and subject to CR review Engineers' judgment, whether the tests need to be witnessed by the Surveyor.

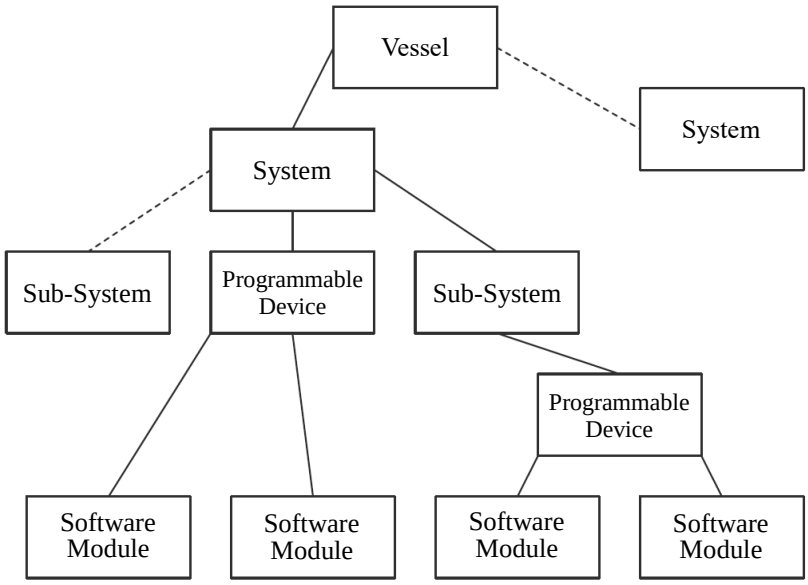

Note: Dashed lines on drawing indicate branches not yet developed

Fig. VIII 3-1
Typical Computer-based System

Chapter 4

Machinery Operated from a Centralized Control Station – CAS Symbol

4.1 General

4.1.1 Ships having the means to control and monitor the propulsion machinery and propulsion-machinery space from a continuously manned centralized control and monitoring station installed within or adjacent to, the propulsion-machinery space are to comply with the requirements contained in this chapter. Except as noted herein, the requirements in Chapter 1 through Chapter 3 of this Part as applicable, are to be complied with. Additionally, the requirements in this chapter cover the operation required for propulsion machinery start-up, safe sailing during open sea and maneuvering conditions, and do not cover operations after anchoring or mooring.

4.1.2 Equipment associated with the remote or automatic control and monitoring of the propulsion machinery installed in **CAS**, **CAU** and **CAB** ships are to comply with the following requirements.

(a) Testing of equipment

(i) Testing is to be carried out in accordance with Table VIII 2-2 and VIII 4-1. Where environmental operating parameters exceed those specified herein, special arrangements will be considered. With the exception of field sensors, all required system's components are to be subjected to these tests. For computer-based systems, the equipment to be tested includes microprocessors, storage devices, power supply units, signal conditioners, analog/digital converters, computer monitors (video display units), keyboards, etc but it excludes printers, data recording or logging devices not required in this part.

(ii) The manufacturer or assembler of the associated equipment is to provide documented evidence indicating that the equipment meets the criteria specified in Table VIII 2-2 and VIII 4-1. Additionally, for computer-based systems, evidence is to be included to indicate that semiconductor devices such as CPU, non-volatile memories, etc., have been subjected to a burn-in test for a period not less than 72 hours, at an operating temperature of 70°C, with power connected to the device.

(iii) Environmental testing on the associated equipment is to be carried out in accordance with the criteria outlined in Table VIII 2-2. With the exception of the inclination and vibration tests, all environmental tests are to be carried out and satisfactorily reported upon by the manufacturer and/or assembler; such test report is to be submitted for review.Inclination and vibration tests are to be carried out in the presence of the Surveyor at the manufacturer's or assembler's plant, or at an independent testing laboratory in accordance with Table VIII 2-2.

(iv) Performance testing in accordance with Table VIII 4-1 are to be carried out in the presence of the Surveyor at the testing plant or after installation of the equipment onboard the vessel. Where deemed necessary by the Surveyor, insulation resistance and high voltage tests in accordance with Table VIII 2-2 may be required to be carried out.

(b) Failure Mode and Effect Analysis (FMEA)

The integrity of the associated automatic or remote control and monitoring systems is to be verified by means of a Failure Mode and Effect Analysis (FMEA) or equivalent method on the basis of a single failure mode criteria. The analysis is to show that no single failure will lead to such a condition that endangers human safety and/or the vessel. A Failure Mode and Effect Analysis (FMEA) or equivalent is to be submitted for review. For computer-based systems, see 3.2.11 of this Part.

4.2 Station in Navigating Bridge

In order to provide water delivery from the main fire system at a suitable pressure, means of remote starting any one of the main fire pumps are to be provided at the navigating bridge unless the fire main is permanently pressurized. Further, if fitted, the navigating bridge propulsion control station is to include controls, displays and alarms as per Table VIII 2-1.

4.3 Centralized Control and Monitoring Station

4.3.1 Location and Arrangements

(a) The centralized control and monitoring station is to be provided within, or adjacent to, the propulsion-machinery space. Where this station is placed within an enclosed room, at least two means of access, located as remote from each other as practicable, are to be provided.

(b) Glass in control room windows located in or adjacent to propulsion-machinery space is to be of the shatter-resistance type.

(c) Considerations will be given to the installation of centralized control and monitoring station located remote from the propulsion-machinery space, provided it can be shown that the operation and monitoring of the propulsion machinery and propulsion-machinery space would be as effective as with the centralized control station located within, or adjacent, to the propulsion-machinery space.

4.3.2 Emergency Shutdown

The centralized control and monitoring station is to be provided with the emergency means to stop the main propulsion machinery.

4.3.3 Controls and Instrumentation

(a) The centralized control and monitoring station is to include adequate controls, displays and alarms needed to maintain normal and safe operation of the propulsion machinery and associated ship's service systems including starting, stopping and transfer of essential auxiliary pumps and motors, and monitoring of the electrical power generating machinery, fired boilers associated with propulsion and electrical power generating machinery, and monitoring of propulsion-machinery space.

(b) The installed control and monitoring system is to provide the same degree of control as if the propulsion-machinery space was manned. Control functions from this station may be designed for either remote manual or automatic control. See Tables VIII 4-2 through VIII 4-10 for required controls, safety provisions, alarms and displays to be fitted at such station.

(c) Additionally, where audible alarms are not acknowledged at the centralized control and monitoring station in a pre-set period of time, i.e., 2 minutes, the system is to activate the engineer's alarm audible in the engineer's accommodations.

4.4 Power Supply for Control and Monitoring Systems

4.4.1 The power supply arrangement is to be in accordance with 2.10.1(a). In addition, an emergency feeder or pipe is to be provided for control systems, display/alarm systems and safety systems associated with propulsion.

4.4.2 The emergency feeder as well as the main supply feeder for control systems, alarm/display systems and safety systems associated with propulsion are to be connected to the emergency switchboard and main switchboard (distribution boards), respectively, and are to be provided with short-circuit protection at such boards. Their supply status are to be displayed at the remote propulsion stations.

4.4.3 Transfer of power supply for the systems associated with propulsion is to be effected automatically. The power supply transfer device (switch or valve) is to be arranged for manual operation and is to be provided at the centralized control and monitoring station.

4.5 Continuity of Power

The electrical power generating machinery is to be arranged so that upon failure of the on-line ship's service generator, the standby generator can be started and placed in service from a single location. This location may be at the centralized control and monitoring station (centralized monitoring station for **CAB**), main switchboard or at the location of the ship's service generators. Alternatively, this requirement may be satisfied by compliance with 5.5 of this Part.

4.6 Propulsion Auxiliaries

The centralized control station is to be provided with means to remotely start and stop auxiliary pumps associated with the operation of the following:

4.6.1 Propulsion engine

4.6.2 Electrical power generators

4.6.3 Controllable pitch propellers(CPP)

4.6.4 Propulsion boilers and boilers supporting propulsion (including power generation)

4.6.5 Fuel oil transfer system

Automatic transferring of vital auxiliary pumps, where fitted, is to be alarmed at the centralized control station.

4.7 Propulsion Steam Turbines

4.7.1 The astern guardian valve is to open automatically as a result of a throttle trip or a maneuvering signal, such as the actuation of a specific switch or by movement of the throttle control into the maneuvering range. Failure of the guardian valve to open is to be alarmed at the centralized control and monitoring station.

4.7.2 Where scoop circulation is provided for the main condenser, the main circulating pump is to be automatically started as required for satisfactory operation of the propulsion machinery.

4.7.3 In the event of low lubricating-oil pressure there is to be an automatic changeover to the standby lubricating oil pumps. The governor is to be arranged to shut off the steam to the ahead turbines upon failure of the lubricating oil system.

4.7.4 An alarm is to be provided at the centralized control and monitoring station and any other remote propulsion control station, to indicate that the propeller shaft has been stopped too long on a standby or stop maneuver.

4.7.5 The centralized control and monitoring station is to be provided with safety provisions, alarms and displays as listed in Table VIII 4-3.

4.8 Propulsion Gas Turbines

The centralized control and monitoring station is to be provided with the safety provisions, alarms and displays as listed in Table VIII 4-4.

4.9 Propulsion Diesel Engines

4.9.1 In the event of the lubricating oil pressure dropping to a preset level, there is to be an automatic slowdown of the main engine, or if provided, an automatic changeover to the standby pump.

4.9.2 An overspeed condition is to cause the automatic shutdown of the main engine.

4.9.3 The centralized control and monitoring station is to be provided with the safety provisions, alarms and displays as listed in Tables VIII 4-5A and VIII 4-5B, as applicable.

4.10 Electric Propulsion

The centralized control and monitoring station is to be provided with the safety provisions, alarms and displays as listed in Table VIII 4-6 for electric propulsion machinery, and as listed in Table VIII 4-7 as applicable for generator prime mover for electric propulsion.

4.11 Auxiliary Turbines and Diesel Engines

The centralized control and monitoring station is to be provided with the safety provisions, alarms and displays as listed in Table VIII 4-10.

4.12 Oil Fired Boilers Associated with Propulsion and Electrical Power Generating Machinery

The requirements contained in 4.4 of Part V are to be complied with. The centralized control and monitoring station is to be provided with the safety provisions, alarms and displays as listed in Tables VIII 4-8 and VIII 4-9 as applicable.

4.13 Fuel Oil Settling and Daily Service Tanks

4.13.1 Low level conditions of fuel oil settling and daily service tanks are to be alarmed at the centralized control and monitoring station; additionally, adequate interlock means to prevent tanks over-pressurization or over-flow spillages are to be provided.

4.13.2 Where provisions are made for automatic filling, the arrangements are to include high level alarm together with automatic filling-pump shutdown and automatic pump start-up at a predetermined low level, in addition to the arrangements per 4.13.1 of this Part.

4.13.3 Heating arrangements see 4.14.2(d).

4.14 Arrangement and Monitoring of Machinery Space

4.14.1 Bilges

(a) The propulsion-machinery space is to be provided with two independent bilge water-level systems to detect excessive water influx or rise in the propulsion- machinery space bilges, at the various angles of heel and trim; the bilge wells are to be large enough to accommodate the normal drainage. Excessive water influx or rise in the bilge wells is to be alarmed at the centralized control and monitoring station. See also Tables VIII 2-2 and VIII 4-2 for alarms and displays.

(b) Where the bilge pumps are arranged for automatic operation, means are to be provided to indicate, at the centralized control and monitoring station, when the influx of liquid is greater than the pump capacity or when the pump is operating more frequently than would normally be expected. Additionally, where automatically controlled bilge pumps are provided, special attention is to be given to oil pollution prevention requirements.

4.14.2 Fire Prevention

To minimize the outbreak of fire, the following is to be provided:

(a) On all main and auxiliary reciprocating internal-combustion engines and on all main and auxiliary gas turbines, the high pressure fuel-oil piping is to be effectively shielded and secured to prevent fuel or fuel mist from reaching a source of ignition on the engine or its surroundings; an oil leakage condition is to be alarmed at the centralized control and monitoring station.

(b) Drip trays for collecting fuel and lubricating oil are to be fitted below pumps, burners, tanks, etc. They are to be of suitable height and provided with suitable drainage to a collecting tank incorporating a high level alarm audible at the centralized control and monitoring station.

(c) Fuel oil heaters, purifiers, pumps, and filters are to be shielded, or grouped in a special room or location ventilated by suction.

(d) Where heaters are provided in fuel systems, the high temperature alarms are to be located at the centralized control and monitoring station.

4.14.3 Fire Detection and Alarm System

The propulsion-machinery space is to be provided with a fixed fire detection and alarm system complying with Regulation II-2/7.4 of SOLAS 1974, as amended. This fixed fire detection and alarm system may be combined with other fire detection and alarm system required on board the vessel. The fire control panel is to be located on the navigating bridge or in the fire fighting station. If located in the fire fighting station, a indicating unit is to be fitted on the navigating bridge. Propulsion machinery space fire is to be alarmed in the centralized control station.

4.15 Sea Trials

In addition to the requirements in 2.12.5, effective operation of the following is to be demonstrated to the satisfaction of the Surveyor. With the exception of 4.15.6, it is recommended that these demonstrations or tests be carried out before sea trials and are to include simulated failures so that proper corrective actions may be carried out and witnessed by the Surveyor.

4.15.1 Automatic or Remote Control and Monitoring System for Propulsion Machinery and Electrical Power Generating Machinery

In addition to the verification of required control responses, alarms and displays, this demonstration is to include the sequential operation of automated systems, where fitted. From the centralized control and monitoring station, the transferring of the required standby essential auxiliary pumps is to be included.

4.15.2 Local Control

Local control of the propulsion machinery is to be demonstrated.

4.15.3 Fire Control and Alarm System

In addition to the verification of required detectors, displays and call points, where the fire main is not maintained pressurized, it is to be demonstrated that at least one of the main fire pumps can be started from the station in the navigation bridge.

4.15.4 Bilge Detection System

Where fitted, automatic starting of the propulsion-machinery space bilge pumps is to be demonstrated.

4.15.5 Fuel Oil Pumps

Where fitted, the automatic starting of the pumps serving the fuel oil settling and daily service tanks is to be demonstrated.

4.15.6 Operational Test of Propulsion Machinery

After the propulsion machinery has been running for at least 2 hours, the machinery is to be operated over its full range of power to demonstrate the adequacy of all control systems. The tests are to be at least 6 hours duration, including the initial running time of 2 hours.

Table VIII 4-1
Performance Tests for Control and Monitoring Equipment

No.	Test	Test parameters (1)		Other information
1	Visual inspection	–		–Conformance to drawings, design data; –quality of workmanship and construction.
2	Performance test	Manufacturer's performance test program based upon specification and relevant Rule requirements	–standard atmosphere conditions –temperature:25°C±10°C –relative humidity: 60%±30% –air pressure:96kPa ±10kPa	–Confirmation that operation is in accordance with the requirements specified for particular systems or equipment; –checking of self-monitoring features; –checking of specified protection against an access to the memory; –checking against effects on unerroneous use of control elements in the case of computer systems
3	External Power supply failure	– 3 interruptions during 5 minutes; – switching - off time 30 seconds each case.		–The time of 5 minutes may be exceeded if the equipment under test needs a longer time for start up, e.g. booting sequence. –For equipment which requires booting, one additional power supply interruption during booting to be performed. Verification of: –the specified action of the equipment upon loss and restoration of supply; –possible corruption of program or data held in programmable electronic systems, where applicable.

Note:

(1) Alternative equivalent testing procedures may be accepted, provided the requirements in the other columns are complied with.

Table VIII 4-2
Centralized Control and Monitoring Station (Applicable to CAS, CAU, and CAB Ships)

System	Monitored/Controlled Parameter		A	D	C	Notes: [A = Alarm; D = Display; C = Controller/Actuator] [x = applies]
Propulsion control & monitoring	A1	As in Table VIII 2-2 items A1 through C2, with following additional features	x	x	x	Following items of Table VIII 2-2 are to be modified: - Item A4: additional telegraph is not required for centralized control station. - Item A6: starting of propulsion engine is required for all engine types - Item C1: acknowledgement switch for transfer of control station is not required in centralized control station
	A2	System power supply main and emergency feeders: failure, status and transfer	x	x	x	
	A3	Propulsion engine auxiliaries and boiler auxiliaries - status and start/stop		x	x	Automatic start/stop, if fitted, is to be alarmed. Applicable to propulsion boilers and boilers supporting propulsion.
	A4	Controllable pitch propeller (CPP) hydraulic power unit start/stop		x	x	
	A5	CPP hydraulic oil pressure - low and high	x			High-pressure alarm is required only if required by design.
	A6	CPP hydraulic oil temperature - high	x			If it is a system design feature
	A7	CPP hydraulic oil tank level - low	x			
	A8	Steam turbine shaft stopped - excess of set period	x			
	A9	Steam turbine shaft rollover - activated		x	x	To be activated automatically for **CAU**
Electric Power Generating Plant	B1	Starting, paralleling and putting generator on line			x	Not required if main switchboard is located in the centralized control station
	B2	Generator running		x		
	B3	Voltage - high and low	x	x		
	B4	Current - high	x	x		
	B5	Frequency - high and low	x	x		
	B6	Failure of on - line generator	x			
	B7	Generator engine auxiliaries start/stop		x	x	Automatic start/stop, if fitted, is to be alarmed
	B8	Bearing lub oil inlet pressure - low	x	x		Automatic shutdown prime mover.
	B9	Generator cooling inlet pump or fan motor - fails	x			
	B10	Generator cooling medium temp. - high	x	x		

High voltage rotating machine	C1	Stationary windings temperature - high	x			
Fuel oil system	D1	Settling and service tank level - low and high	x			High level alarm required only if automatic filling is provided, or if **CAU**
	D2	Overflow tank and drain tank level - high	x			
	D3	Transfer pump start/stop		x	x	Start/stop may be automatic.
	D4	Heated fuel oil in settling and service tank, fuel oil temperature – high	x	x		
	D5	Fuel oil tank heating medium temperature - high	x			
	D6	Fuel oil heater, fuel oil temperature - high (or viscosity low) or flow - low	x			
	D7	Fuel oil heater, heating medium temperature - high	x			
Stern tube lub. Oil	E1	Tank level - low	x			
Boiler, thermal oil heater, incinerator, etc.	F1	Automatic shutdown	x			Propulsion boilers and auxiliary boilers supporting propulsion are to meet Table VIII 4-8 and Table VIII 4-10
Propulsion machinery space	G1	Bilge level - high	x			
	G2	Bilge pump status	x	x		Alarm applicable to automatically started bilge pump that starts/stops excessively or running unduly long
	G3	Fire detected	x			
	G4	Air condition system - fails	x			If necessary for equipment environmental control

Display = display of the analog or digital signal for the monitored parameter. The display of the signal is to provide indication of the monitored parameter in engineering units (such as degrees, PSI, RPM, etc.) or status indication. The engineering unit is to effectively display the relevant information concerning the monitored parameter. An alternative engineering unit which provides equivalent effectiveness, may be considered.

Table VIII 4-3
Monitoring of Propulsion Machinery – Steam Turbine
(Applicable to CAS, CAU, and CAB Ships. See also Table VIII 4-2)

System	Monitored/Controlled Parameter		A	D	Auto slow down	Auto Start	Auto shut down	Notes (see also bottom of table) [A = Alarm. D = Display. x =apply]
Sensors	Common or separate		c	c	c	s	s	c = common; s = separate
Lubricating oil	A1	Pressure at bearing inlets - low	x	x		x	x	For turbines, gears and thrust bearings.
	A2	Temp. at bearing inlet - high	x	x				For turbines, gears and thrust bearings.
	A3	Bearing temp. or bearing oil outlet temp. - high	x	x				For turbines, gears and thrust bearings.
	A4	Filter differential pressure - high	x					
	A5	Gravity tank and sump levels - low	x	x				
Lubricating oil cooling medium	B1	Pressure or flow - low	x	x		x		
	B2	Temp. at outlet - high	x					
	B3	Expansion tank level - low	x	x				
Sea water	C1	Pressure or flow - low	x	x		x		
	C2	Pump - auto starting and running		x				For ships fitted with sea inlet scoops.
	C3	Scoop valve - open/ close		x				For ships fitted with sea inlet scoops.
Steam	D1	Pressure at throttle - low	x				x	
	D2	Pressure, ahead chest		x				
	D3	Pressure, astern chest		x				
	D4	Pressure, gland seal		x				
	D5	Gland seal exhaust fan - failure	x					
	D6	Astern guardian valve - position		x				
	D7	Astern guardian valve - fail to open	x					In response to throttle trip or maneuvering signal.
Condensate	E1	Condenser level - high	x	x			x	
	E2	Condenser level - low	x	x				
	E3	Condensate pump pressure - low	x			x		
	E4	Condenser vacuum - low	x	x			x	
	E5	Salinity - high	x	x				
Turbine	F1	Vibration Level - high	x		x			
	F2	Axial Displacement - large	x				x	
	F3	Speed		x				
	F4	Overspeed	x				x	
	F5	Shaft rollover - activated		x				
	F6	Shaft stopped - excess of set period	x					Shaft rollover to be activated manually or automatically
Power	G1	Throttle control system power failure	x					

Display = display of the analog or digital signal for the monitored parameter. The display of the signal is to provide indication of the monitored parameter in engineering units (such as degrees, PSI, RPM, etc.) or status indication. The engineering unit is to effectively display the relevant information concerning the monitored parameter. An alternative engineering unit which provides equivalent effectiveness, may be considered.

Auto slowdown = automatic slowdown of turbine, with activation of suitable alarm.

Auto start = automatic starting of standby pump in the system, with activation of suitable alarm.

Auto shutdown = automatic closing of ahead steam throttle valve, with activation of suitable alarm; but to allow admission of steam to astern turbine for braking purposes.

Table VIII 4-4
Monitoring of Propulsion Machinery – Gas Turbine
(Applicable to CAS, CAU, and CAB Ships. See also Table VIII 4-2)

System	Monitored/Controlled Parameter		A	D	Auto Start	Auto shut down	Notes (see also bottom of table) [A = Alarm. D = Display. x =apply]
Sensors	Common/separate		c	c	s	s	c = common; s = separate
Fuel oil	A1	Pressure or flow - low	x	x			
	A2	Temperature - high and low (or viscosity - low and high)	x	x			For heavy fuel oil.
Lubricating oil	B1	Inlet pressure - low	x	x	x	x	For turbines, reduction gears and thrust bearings
	B2	Inlet temperature - high	x	x			For turbines, reduction gears and thrust bearings
	B3	Main bearing temp. or main bearing oil outlet temp. - high	x	x			For turbines, reduction gears and thrust bearings
	B4	Filter differential pressure - high	x				
	B5	Tank level - low	x	x			
Cooling medium	C1	Pressure or flow - low	x	x			
	C2	Temperature - high	x				
Starting	D1	Stored starting energy level - low	x				
	D2	Ignition failure	x				
Combustion	E1	Combustion or flame failure	x			x	
Exhaust gas	F1	Temperature - high	x	x		x	
Turbine	G1	Vibration level - high	x			x	
	G2	Rotor axial displacement - large	x			x	Auto shutdown may be omitted for rotors fitted with roller bearings
	G3	Overspeed	x			x	
	G4	Vacuum at compressor inlet - high	x			x	
Control System	H1	Control, alarm or safety system, power supply failure	x				

Display = display of the analog or digital signal for the monitored parameter. The display of the signal is to provide indication of the monitored parameter in engineering units (such as degrees, PSI, RPM, etc.) or status indication. The engineering unit is to effectively display the relevant information concerning the monitored parameter. An alternative engineering unit which provides equivalent effectiveness, may be considered.

Auto start = automatic starting of standby pump in the system, with activation of suitable alarm.

Auto shutdown = automatic closing of ahead steam throttle valve, with activation of suitable alarm; but to allow admission of steam to astern turbine for braking purposes.

Table VIII 4-5A
Monitoring of Propulsion Machinery – Slow Speed (Crosshead) Diesel Engines
(Applicable to CAS, CAU or CAB Ships. See also Table VIII 4-2)

System	Monitored/Controlled Parameter		A	D	Auto slow down	Auto Start	Auto shut down	Notes (see also bottom of table) [A = Alarm. D = Display. x =apply]
Sensors	Common or separate		c	c	c	s	s	c = common; s = separate
Fuel oil	A1	Fuel oil after filter (engine inlet), pressure - low	x	x		x		
	A2	Fuel oil before injection pumps, temp. - high (or viscosity - low)	x					
	A3	Fuel oil before injection pumps, temp. - low (or viscosity - high)	x					
	A4	Leakage from high pressure pipes	x					
	A5	Fuel oil service tank, level – low	x					High level alarm is also required if without suitable overflow arrangements.
	A6	Common rail fuel oil pressure – low	x					
Lubricating oil	B1	Lube oil to main bearing and thrust bearing, pressure -low	x	x	x	x	x	
	B2	Lube oil to crosshead bearing, pressure - low	x	x	x	x	x	If of a different system
	B3	Lube oil to camshaft, pressure - low	x			x	x	If of a different system
	B4	Lube oil to camshaft, temp. - high	x					If of a different system
	B5	Lube oil inlet, temp. - high	x					
	B6	Thrust bearing pads temp. or bearing outlet temp. - high	x		x		x	
	B7	Oil mist in crankcase, mist concentration - high; or Engine main and crank bearing temperature - high; or Alternative arrangements (engine main and crank bearing oil outlet temperature – high)	x		x			For engines having a power of 2250 kW (3000 hp) and above or having a cylinder bore of more than 300 mm.
	B8	Each cylinder lubricator, flow rate - low.	x		x			
	B9	Lube oil tanks, level - low	x					Where separate lubricating oil systems are installed (e.g. camshaft, rocker arms,

								etc.), individual level alarms are required for all the tanks.
	B10	Common rail servo oil pressure – low	x					
Turbocharger	C1	Lube oil inlet, pressure - low	x					Unless provided with a self-contained lubricating oil system integrated with the turbocharger
	C2	Lube oil outlet (each bearing), temp. - high	x					Where outlet temperature from each bearing cannot be monitored due to the engine/turbocharger design, alternative arrangements may be accepted. Continuous monitoring of inlet pressure and inlet temperature in combination with specific intervals for bearing inspection in accordance with the turbocharger manufacturer's instructions may be accepted as an alternative.
	C3	Speed	x	x				Alarm Activation for High Speed only required for turbochargers of categories B and C
Piston cooling	D1	Coolant inlet, pressure - low	x		x	x		The slow down is not required if the coolant is oil taken from the main cooling system of the engine.
	D2	Coolant outlet (each cylinder), temp. - high	x		x			
	D3	Coolant outlet (each cylinder), flow - low	x		x			Where outlet flow cannot be monitored due to engine design, alternative arrangements may be accepted.
	D4	Coolant in expansion tank, level - low	x					
Sea water cooling	E1	Sea water cooling, pressure - low	x			x		
Cylinder fresh water cooling	F1	Water inlet, pressure - low	x		x	x		
	F2	Water outlet from each cylinder, temp. – high ; or common water outlet, temp. - high	x		x			Sensing at common water outlet is permitted for cylinder jackets fitted with common

								cooling space without intervening stop valves.
	F3	Oily contamination of engine cooling water system.	x					Where engine cooling water is used in fuel and lubricating oil heat exchangers.
	F4	Cooling water expansion tank, level - low	x					
Compressed air	G1	Starting air before main shutoff valve, pressure - low	x	x				
	G2	Control air, pressure - low	x					
	G3	Safety air, pressure - low	x					
Scavenge air	H1	Scavenge air receiver, pressure		x				
	H2	Scavenge air box, temp. - high (fire)	x		x			
	H3	Scavenge air receiver water level - high	x					
Exhaust gas	I1	Exhaust gas after each cylinder, temp. - high	x	x	x			
	I2	Exhaust gas after each cylinder, deviation from average, temp. - high	x					
	I3	Exhaust gas before each turbocharger, temp. - high	x	x				
	I4	Exhaust gas after each turbocharger, temp. - high	x	x				
Fuel valve coolant	J1	Coolant, pressure - low	x			x		
	J2	Coolant, temp. - high	x					
	J3	Coolant expansion tank, level - low	x					
Engine	K1	Speed/direction of rotation		x				
	K2	Rotation - wrong way	x					
	K3	Engine overspeed	x				x	
Power	L1	Control, alarm or safety system, power supply failure	x					

Display = display of the analog or digital signal for the monitored parameter. The display of the signal is to provide indication of the monitored parameter in engineering units (such as degrees, PSI, RPM, etc.) or status indication. The engineering unit is to effectively display the relevant information concerning the monitored parameter. An alternative engineering unit which provides equivalent effectiveness, may be considered.

Auto slowdown = automatic slowdown of turbine, with activation of suitable alarm.

Auto start = automatic starting of standby pump in the system, with activation of suitable alarm.

Auto shutdown = automatic closing of ahead steam throttle valve, with activation of suitable alarm; but to allow admission of steam to astern turbine for braking purposes.

Table VIII 4-5B
Monitoring of Propulsion Machinery – Medium/High Speed (Trunk Piston) Diesel Engines
(Applicable to CAS, CAU or CAB Ships. See also Table VIII 4-2)

System	Monitored/Controlled Parameter		A	D	Auto slow down	Auto Start	Auto shut down	Notes (see also bottom of table) [A = Alarm. D = Display. x =apply]
Sensors	Common or separate		c	c	c	s	s	c = common; s = separate
Fuel oil	A1	Fuel oil after filter (engine inlet), pressure - low	x	x		x		
	A2	Fuel oil before injection pumps, temp. - high (or viscosity - low)	x					For heavy fuel oil burning engines only.
	A3	Fuel oil before injection pumps, temp. - low (or viscosity - high)	x					For heavy fuel oil burning engines only.
	A4	Leakage from high pressure pipes	x					
	A5	Fuel oil service tank, level – low	x					High level alarm is also required if without suitable overflow arrangements.
	A6	Common rail fuel oil pressure – low	x					
Lubricating Oil (diesel engine)	B1	Lube oil to main bearing and thrust bearing, pressure - low	x	x		x	x	
	B2	Lube oil filter differential, pressure - high	x	x				
	B3	Lube oil inlet, temp. - high	x	x				
	B4	Oil mist in crankcase, mist concentration – high; or Engine main and crank bearing temperature - high; or Alternative arrangements (engine main and crank bearing oil outlet temperature – high)	x				x	For engines having a power of 2250 kW (3000 hp) and above or having a cylinder bore of more than 300 mm. Single sensor (for each engine) having two independent outputs for initiating alarm and for shutdown will satisfy independence of alarm and shutdown.
	B5	Each cylinder lubricator, flow rate - low	x		x			If necessary for the safe operation of the engine.
	B6	Common rail servo oil pressure – low	x					
Lubricating Oil (other than diesel engine)	B7	Reduction gear lube oil inlet pressure - low	x	x	x	x	x	Shutdown is to affect all power input to gear
Sea water cooling	C1	Sea water cooling system pressure - low	x	x		x		
Cylinder fresh water cooling	D1	Water inlet, pressure - low or flow - low	x	x	x	x		
	D2	Water outlet (general), temp. – high	x	x	x			Two separate sensors are required for alarm and slowdown.
	D3	Cooling water expansion tank, level - low	x					

Compressed air	E1	Starting air before shutoff valve, pressure - low	x	x				
	E2	Control air pressure - low	x	x				
Scavenge air	F1	Scavenge air receiver temp. - high	x					
Exhaust gas	G1	Exhaust gas after eachcylinder, temp. - high	x	x	x			For engine power > 500 kW/ cylinder
	G2	Exhaust gas after each cylinder, deviation from average, temp. - high	x					For engine power > 500 kW/ cylinder
Engine	H1	Speed		x				
	H2	Overspeed	x				x	
Power	J1	Control, alarm or safety system, power supply failure	x					
Turbocharger	K1	Turbocharger lube oil inlet pressure – low	x					Unless provided with a selfcontained lubricating oil system integrated with the turbocharger
	K2	Turbocharger lube oil outlet temp., eachbearing, - high	x					Where outlet temperature from each bearing cannot be monitored due to the engine/turbocharger design, alternative arrangements may be accepted. Continuous monitoring of inlet pressure and inlet temperature in combination with specific intervals for bearing inspection in accordance with the turbocharger manufacturer's instructions may be accepted as an alternative.
	K3	Speed of turbocharger	x	x				Alarm Activation for High Speed only required for turbochargers of categories B and C

Display = display of the analog or digital signal for the monitored parameter. The display of the signal is to provide indication of the monitored parameter in engineering units (such as degrees, PSI, RPM, etc.) or status indication. The engineering unit is to effectively display the relevant information concerning the monitored parameter. An alternative engineering unit which provides equivalent effectiveness, may be considered.

Auto slowdown = automatic slowdown of diesel engine, along with activation of suitable alarm.

Auto start = automatic starting of a standby pump, along with activation of suitable alarm.

Auto shutdown = automatic stopping of the diesel engines, along with activation of suitable alarm.

Table VIII 4-6
Monitoring of Propulsion Machinery – Electric Propulsion
(Applicable to CAS, CAU, and CAB Ships. See also Table VIII 4-2)

System	Monitored/Controlled Parameter		A	D	Auto shut down	Notes (see also bottom of table) [A = Alarm. D = Display. x =apply]
Propulsion Generator	A1	Bearing lub oil inlet pressure - low	x	x	x	Prime mover automatic shutdown
	A2	Voltage - off-limits	x	x		To read all phases and at least one bus
	A3	Frequency - off-limits	x	x		
	A4	Current		x		To read all phases
	A5	Stationary windings temperature - high	x	x		To read all phases; for generators > 500kW
	A6	Main generator circuit breakers - open/close		x		
	A7	Generator running		x		
	A8	Failure of on-line generator	x			
	A9	Transfer of standby generator	x			
	A10	Generator cooling medium temperature - high	x	x		If applicable
	A11	Failure of generator cooling pump or fan motor	x			If applicable
	A12	Field voltage and current		x		For DC generator
	A13	Inter-pole winding temperature -high	x	x		For DC generator
Propulsion Motor - AC	B1	Bearing, lub. oil inlet pressure - low	x	x	x	
	B2	Armature voltage - off-limits	x	x		To read all phases and at least one bus
	B3	Field voltage		x		
	B4	Frequency - off-limits	x	x		
	B5	Armature current		x		To read all phases
	B6	Field current		x		For synchronous motors
	B7	Ground lights or similar		x		
	B8	Stationary windings temperature - high	x	x		To read all phases; for motors > 500kW
	B9	Motor circuit breakers - open/close		x		
	B10	Motor running		x		
	B11	Failure of on-line motor	x			
	B12	Transfer of standby motor	x			
	B13	Motor cooling medium temperature - high	x	x		If applicable
	B14	Failure of cooling pump or fan motor	x			If applicable
Propulsion Motor - DC	C1	Bearing lub oil inlet pressure - low	x	x	x	
	C2	Armature voltage - off-limits	x	x		
	C3	Field voltage		x		
	C4	Armature current		x		
	C5	Field current		x		
	C6	Ground lights or similar		x		
	C7	Motor circuit breakers - open/close		x		
	C8	Motor running		x		
	C9	Motor overspeed	x		x	
	C10	Failure of on-line motor	x			
	C11	Transfer of standby motor	x			
	C12	Motor cooling medium temperature - high	x	x		If applicable
	C13	Failure of cooling pump or fan motor	x			If applicable

Propulsion SCR	D1	Voltage		x		
	D2	Current		x		
	D3	Overload (high current)	x			Alarms before protective device is activated
	D4	Open/close position for assignment switches		x		
	D5	SCR cooling medium temperature - high	x	x		If applicable
	D6	Failure of SCR cooling pump or fan motor	x			If applicable
	D7	Inter-phase reactor temperature, high	x	x		
Transformer	E1	Transformer winding temperature - high	x	x		For each phase

Display = display of the analog or digital signal for the monitored parameter. The display of the signal is to provide indication of the monitored parameter in engineering units (such as degrees, PSI, RPM, etc.) or status indication. The engineering unit is to effectively display the relevant information concerning the monitored parameter. An alternative engineering unit which provides equivalent effectiveness, may be considered.

Table VIII 4-7
Monitoring of Generator Prime Mover for Electric Propulsion
(Applicable to CAS, CAU or CAB Ships)

System	Monitored/Controlled Parameter		A	D	Auto Start	Auto Shut down	Notes: [A = Alarm; D = Display; x = applies]
Trunk Piston Type Diesel Engines							
Fuel oil	A1	Fuel oil after filter (engine inlet), Pressure – low	x	x	x		
	A2	Fuel oil before injection pumps, temp. – high (or viscosity – low)	x				For heavy fuel oil burning engines only.
	A3	Fuel oil before injection pumps, temp. – low (or viscosity – high)	x				For heavy fuel oil burning engines only.
	A4	Leakage from high pressure pipes	x				
	A5	Fuel oil service tank, level – low	x				High level alarm is also required if without suitable overflow arrangements.
	A6	Common rail fuel oil pressure - low	x				
Lubricating oil	B1	Lube oil to main bearing, pressure – low	x	x	x	x	
	B2	Lube oil filter differential, pressure – high	x	x			
	B3	Lube oil inlet, temp. – high	x	x			
	B4	Oil mist in crankcase, mist concentration – high; or Engine main and crank bearing temperature - high; or Alternative arrangements (engine main and crank bearing oil outlet temperature – high)	x			x	For engines having a power of 2250 kW (3000 hp) and above or a cylinder bore of more than 300 mm. Single sensor (for each engine) having two independent outputs for initiating alarm and for shutdown will satisfy independence of alarm and shutdown.
	B5	Each cylinder lubricator, flow rate – low	x				If necessary for the safe operation of the engine.
	B6	Common rail servo oil pressure - low	x				
Sea cooling water	C1	Sea water cooling system pressure – low	x	x	x		
Cylinder fresh water cooling	D1	Water inlet, pressure – low or flow – low	x	x	x		
	D2	Water outlet (general), temp. – high	x	x			
	D3	Cooling water expansion tank, level – low	x				
Compressed air	E1	Starting air before shutoff valve, pressure – low	x	x			
	E2	Control air pressure – low	x	x			
Exhaust gas	F1	Exhaust gas after each cylinder, temp. – high	x	x			For engine power > 500 kW/cylinder
Turbocharger	G1	Turbocharger oil inlet pressure - low	x				Unless provided with a self-contained lubricating oil system integrated with the turbocharger
	G2	Turbocharger oil outlet temp., each bearing, - high	x				Where outlet temperature from each bearing cannot be monitored due to the

							engine/ turbocharger design, alternative arrangements may be accepted. Continuous monitoring of inlet pressure and inlet temperature in combination with specific intervals for bearing inspection in accordance with the turbocharger manufacturer's instructions may be accepted as an alternative.
	G3	Speed of turbocharger	x				Alarm Activation for High Speed only required for turbochargers of categories B and C.
Engine	H1	Over speed	x			x	
Power Supply	I1	Main	x	x			
	I2	Emergency	x				
Gas Turbines							
Fuel oil	J1	Pressure or flow – low	x	x			
	J2	Temperature – high and low (or viscosity – low and high)	x	x			For heavy fuel oil.
Lubricating oil	K1	Inlet pressure – low	x	x	x	x	
	K2	Inlet temperature – high	x	x			
	K3	Bearing temp. or bearing oil outlet temp. – high	x	x			
	K4	Filter differential pressure – high	x				
	K5	Tank level – low	x	x			
Cooling medium	L1	Pressure or flow – low	x	x			
	L2	Temperature – high	x				
Starting	M1	Stored starting energy level – low	x				
	M2	Ignition failure	x			x	
Combustion	N1	Combustion or flame failure	x			x	
Exhaust gas	O1	Temperature – high	x	x		x	
Turbine	P1	Vibration level – high	x			x	
	P2	Rotor axial displacement – large	x			x	
	P3	Overspeed	x			x	
	P4	Vacuum at compressor inlet – high	x			x	
Power Supply	Q1	Main	x	x			
	Q2	Emergency	x				

Display = display of the analog or digital signal for the monitored parameter. The display of the signal is to provide indication of the monitored parameter in engineering units (such as degrees, PSI, RPM, etc.) or status indication. The engineering unit is to effectively display the relevant information concerning the monitored parameter. An alternative engineering unit which provides equivalent effectiveness, may be considered.

Auto start = automatic starting of a standby pump, along with activation of suitable alarm.

Auto shutdown = automatic stopping of the diesel engines and gas turbine, along with activation of suitable alarm.

Table VIII 4-8
Monitoring of Main Oil Fired Boiler and Associated Machinery
(Applicable to CAS, CAU, and CAB Ships. See also Table VIII 4-2)

System	Monitored/Controlled Parameter		A	D	Auto Start	Auto Shut down	Notes: [A = Alarm; D = Display; x = applies]
Sensors	Common/separate		c	c	s	s	c = common sensor; s = separate sensor
Feed water	A1	Atmospheric drain tank level - high and low	x	x			
	A2	Dearator level - high and low	x	x			
	A3	Dearator pressure - high and low	x	x			
	A4	Feed water pump pressure - low	x	x	x		
	A5	Feed water temperature - high	x	x			
	A6	Feed water outlet salinity - high	x	x			
Boiler Drum	B1	Water level - high and low	x	x			
	B2	Water level - low-low	x			x	
Steam	C1	Pressure - high and low	x	x			
	C2	Superheater outlet temperature - high	x	x			
Air	D1	Forced draft pressure - failure	x			x	
	D2	Rotating air heater motor - failure	x				If provided
	D3	Air register - open/close		x			
	D4	Fire in boiler casing	x	x			
Fuel oil	E1	Pump pressure at outlet - low	x	x	x		
	E2	Heavy fuel oil temperature - high (or viscosity - low)	x	x			
	E3	Heavy fuel oil temperature – low (or viscosity – high)	x	x			
	E4	Master fuel oil valve - open/close		x			
Burner	F1	Burner valve - open/close		x			Individual
	F2	Atomizing medium pressure - off-limits	x	x			
	F3	Ignition or flame of burners - fails	x	x		x	For multiple burners, flame failure of a single burner is to shutdown the corresponding burner fuel valves. Shut down is to be achieved within 6 seconds following flame extinguishment.

	F4	Flame scanner - fails	x			x	For multiple burners fitted with individual flame scanner, failure of flame scanner is to shut down the corresponding burner fuel valves.
	F5	Uptake gas temperature - high	x				For fire detection
Power	G1	Control system power supply - fails	x	x		x	Automatic closing of fuel valve(s)

Display = display of the analog or digital signal for the monitored parameter. The display of the signal is to provide indication of the monitored parameter in engineering units (such as degrees, PSI, RPM, etc.) or status indication. The engineering unit is to effectively display the relevant information concerning the monitored parameter. An alternative engineering unit which provides equivalent effectiveness, may be considered.

Auto start = automatic starting of standby pump in the system, with activation of suitable alarm.

Auto shutdown = automatic closing of fuel valve, with activation of suitable alarm.

Table VIII 4-9
Monitoring for Auxiliary Oil Fired Boiler
(Applicable to CAS, CAU, and CAB Ships.)

System	Monitored/Controlled Parameter		A	D	Auto Shut down	Notes: [A = Alarm; D = Display; x = applies]
Feedwater	A1	Feedwater outlet salinity - high	x	x		
Boiler drum	B1	Water level - high	x			
	B2	Water level - low	x	x	x	
Steam	C1	Pressure - high and low	x	x		
	C2	Superheater outlet temperature - high	x	x		
Air	D1	Supply air pressure - failure	x		x	Alarm for draft fan failure is acceptable
	D2	Fire in boiler air supply casing	x			Excessive high temperature alarm at boiler air supply casing is acceptable
Fuel oil	E1	Pump outlet pressure – low	x	x		
	E2	Temperature - high and low (or viscosity - low and high)	x	x		For heavy fuel oil only
Burner	F1	Fuel oil valves - open/close		x		Individual valves. Applicable only to auxiliary boilers with multiple burners
	F2	Ignition or flame - fails	x	x	x	Individual
	F3	Flame scanner - fails	x		x	Individual
	F4	Uptake gas temp. - high	x			
Power	G1	Control system power supply – fails	x		x	

Display = display of the analog or digital signal for the monitored parameter. The display of the signal is to provide indication of the monitored parameter in engineering units (such as degrees, PSI, RPM, etc.) or status indication. The engineering unit is to effectively display the relevant information concerning the monitored parameter. An alternative engineering unit which provides equivalent effectiveness, may be considered.

Table VIII 4-10
Monitoring for Auxiliary Turbines and Diesel Engines
(Applicable to CAS, CAU, and CAB Ships.)

System	Monitored/Controlled Parameter			A	D	Auto Shut down	Notes: [A = Alarm; D = Display; x = applies]
Diesel Engine	Lubricating oil	A1	Bearing oil inlet pressure - low	x	x	x	
		A2	Bearing inlet oil temperature - high	x	x		
		A3	Oil mist in crankcase, mist concentration – high; or engine main and crank bearing temperature – high; or alternative arrangements (engine main and crank bearing oil outlet temperature – high)	x		x	For engines having a power of 2250 kW (3000 hp) and above or having a cylinder bore more than 300 mm. Single sensor (for each engine) having two independent outputs for initiating alarm and for shutdown will satisfy independence of alarm and shutdown.
		A4	Common rail servo oil pressure - low	x			
	Cooling medium	A5	Pressure or flow - low	x	x		
		A6	Temperature at outlet - high	x	x		
		A7	Expansion tank level - low	x			
	Fuel oil	A8	Fuel oil leakage from injection pipe	x			
		A9	Fuel oil temp. – high and low (or viscosity – low and high)	x			For heavy fuel oil only
		A10	Service tank level - low	x			
		A11	Common rail fuel oil pressure - low	x			
	Starting medium	A12	Energy level - low	x	x		
	Exhaust	A13	Exhaust gas temperature after each cylinder - high	x			For engines having a power of more than 500 kW/cylinder.
	Speed	A14	Overspeed	x		x	
	Turbocharger	A15	High speed	x			Alarm Activation for High Speed only required for turbochargers of categories B and C
Steam Turbine	Lub oil	B1	Bearing oil inlet pressure - low	x	x	x	
		B2	Bearing oil inlet temperature - high	x	x		
		B3	Bearing temperature or bearing oil outlet temperature - high	x	x		
	Lubricating Oil cooling medium	B4	Pressure or flow - low	x	x		
		B5	Temperature at outlet - high	x			
		B6	Expansion tank level -	x			

			low				
	Sea water	B7	Pressure or flow - low	x	x		
	Steam	B8	Pressure at inlet - low	x	x		
	Condensate	B9	Condenser vacuum - low	x	x	x	
		B10	Condensate pump pressure - low	x	x		
	Rotor	B11	Axial displacement - large	x		x	
		B12	Overspeed	x		x	
Gas Turbine	Lubricating oil	C1	Inlet pressure inlet - low	x	x	x	
		C2	Inlet temperature - high	x	x		
		C3	Bearing temp. or oil outlet temp. - high	x	x		
		C4	Filter differential pressure	x			
	Cooling medium	C5	Pressure or flow - low	x	x		
		C6	Temperature - high	x			
	Fuel oil	C7	Pressure, inlet - low	x	x		
		C8	Temp. - high and low (or viscosity - low and high)	x			For heavy fuel oil only
	Exhaust gas	C9	Temperature - high	x			
	Combustion	C10	Combustion or flame failure	x		x	
	Starting	C11	Ignition failure	x		x	
		C12	Stored starting energy level - low	x			
	Turbine	C13	Vibration level - high	x		x	
		C14	Axial displacement - high	x		x	Auto shutdown may be omitted for rotors fitted with roller bearings
		C15	Overspeed	x		x	
		C16	Vacuum at compressor inlet - high	x		x	

Display = display of the analog or digital signal for the monitored parameter. The display of the signal is to provide indication of the monitored parameter in engineering units (such as degrees, PSI, RPM, etc.) or status indication. The engineering unit is to effectively display the relevant information concerning the monitored parameter. An alternative engineering unit which provides equivalent effectiveness, may be considered.

Chapter 5

Unattended Machinery Spaces – CAU Symbol

5.1 General

Ships having the means to control and monitor the propulsion machinery and propulsion-machinery space from the navigating bridge and from a centralized control and monitoring station installed within or adjacent to, a periodically unattended propulsion-machinery space, are to comply with the requirements contained in this chapter. Except as noted herein, the requirements in Chapter 1 through Chapter 4 of this Part, as applicable, are to be complied with. Additionally, abnormal or unsafe condition alarms are to be arranged to alarm such condition in the navigating bridge and the engineer's accommodations.

5.2 Automatic Controls

5.2.1 Effective control of the propulsion machinery, from the navigating bridge, is to be performed with automatic performance of all associated functions, including, where necessary, means of preventing overload of the propulsion machinery. The required automatic control means to operate the propulsion machinery are to be capable of meeting load demands from standby to full system rated load, under all operating conditions, without the need for manual adjustment or manipulation. Automatic control means for the propulsion oil fired boiler together with appropriate safety provisions are to be included.

5.2.2 For electric propulsion driven vessels, in order to prevent nuisance tripping of the main generator circuit breakers, a power management system is to be provided and arranged so that when the power requirement for the propulsion motors exceeds the on-line generating capacity, the power management system is to take, automatically, a corrective action, such as reduction of power, shedding of non-essential loads, etc.

5.2.3 The means for the automatic starting and transferring of required standby essential auxiliary pumps associated with propulsion, oil fired boilers associated with propulsion are to be provided. See 4.6 and 5.8.

5.3 Station in Navigating Bridge

In addition to the controls, displays and alarms as required in 2.7.2 and 4.2, the station in the navigating bridge is to include the following: (see Table VIII 2-1).

5.3.1 A fire control panel, or a fire indicating unit if the fire control panel is fitted in fire control station. See 4.14.3 and 5.12.3.

5.3.2 The means to detect and alarm excessive rise of water in the propulsion-machinery space bilges. The means to indicate when the influx of liquid is greater than the pump capacity or when the pump is operating more frequently than would normally by expected, are to be included.

5.3.3 A summary-alarm for the propulsion and its associated machinery (including oil fired boilers associated with propulsion). Any of the alarm conditions as listed in Tables VIII 4-3 through VIII 4-10 is to activate the summary-alarm. Acknowledging of these alarms from the station in the navigating bridge is not to silence of the engineer's alarm required in 5.11.

5.3.4 For controllable-pitch propellers, the means to start/stop and display operational status of the associated hydraulic pumps.

5.3.5 For steam turbine driven vessels, the following alarms and displays are to be provided:

(a) A reduction of steam pressure below a safe minimum level.

(b) An alarm to indicate that the propeller shaft has been stopped too long on a standby or stop maneuver.

5.4 Centralized Control and Monitoring Station

The requirements in Chapter 4 are applicable except where the fire-fighting control station is installed within the propulsion-machinery space, the requirements in 5.12.1 are to be complied with, and the 2 minute time limitation in 4.3.3(c) does not apply.

5.5 Continuity of Power

5.5.1 Provision is to be made for automatic starting and connecting to the main switchboard of a standby generator of sufficient capacity to permit propulsion and steering and to ensure the safety of the vessel with automatic restarting of the essential auxiliaries including, where necessary, sequential operations. This standby electric power is to be available in no more than 45 seconds. The following requirments are also to be complied with:

(a) Connection/Disconnection of Generators to/from Switchboard

(i) Simultaneous connection

Means are to be provided to prevent simultaneous connection of generators to a common switchboard bus.

(ii) Closing of circuit breaker

Closing of the generator circuit breakers can only be effected upon satisfactory synchronization/paralleling conditions. Automatic closure of the circuit breaker for the standby generator is to be limited to one attempt to minimize damage in the event the original power failure was caused by a short-circuit.

(iii) Automatic connection

After a blackout due to short-circuit conditions, the automatic connection of a generator to a reenergized switchboard is to be limited to no more than one attempt. Similarly, adequate arrangements are to be provided to prevent automatic starting and connection of the standby generator upon transient main bus voltage or frequency fluctuations, i.e., caused by short load peaks, high motor starting currents.

(iv) Disconnection of Running Generator

Where the standby generator has been started as a result of a prolonged main bus bar voltage or frequency fluctuation, the running generator is to be stopped and disconnected from the switchboard prior to connection of the standby generator.

(b) Load-shedding Arrangements

(i) In order to safeguarded electrical power supply for essential services, adequate load-shedding arrangements to disconnect non-essential services are to be provided in the following cases.

(1) Where the possibility exists that due to the automatic switching on of additional loads, whether manually or automatically initiated, the total load exceeds the rated generator capacity.

(2) When generators are operated in parallel to supply the load and when in case of failure of one of the running generators, the total load exceeds the combined capacity of the remaining generator(s).

(ii) When designing the protection system to trip the non-essential services in case of generator overload, due account is to be taken of loads with power factors deviating from rated values, the decreased efficiency of engines, etc.

(c) Automatic Starting of Loads

Where automatic means for the starting of loads are provided, an adequate automatic sequence starting system is to be provided to prevent overloading of the generating plant at the moment and during the procedure of power restoration after the occurrence of a blackout. The sequence starting system is to ensure the shortest possible starting delay for those loads which are most essential for the ship or its propulsion machinery.

5.5.2 To satisfy 5.5.1 the operation of propulsion machinery and essential services may be at reduced power.

5.6 Propulsion Steam Turbine

5.6.1 In addition to the safety provisions as listed in Table VIII 4-3 and where the safety action is caused by loss of lubricating oil, automatic or manual means are to be provided to allow braking steam to be applied to the turbine. In the case of excessive vibration, the turbine speed is to be automatically reduced to a level where the vibration is acceptable. See also 5.3.5.

5.6.2 The control system is to provide for automatic roll-over of the main propulsion turbine when the propeller shaft has been stopped too long on a standby or stop maneuver condition. Automatic roll-over is to be displayed at the centralized control and monitoring station and other remote propulsion control stations. Means are to be provided to discontinue the automatic shaft roll-over from the remote control station in command.

5.7 Propulsion Diesel Engines

Notwithstanding 4.9.1 in the event of the lubricating oil pressure dropping to a preset level, there is to be an automatic shutdown of the main engine.

5.8 Oil Fired Boilers Associated with Propulsion

5.8.1 In addition to the requirements in 4.12 of this Part, oil fired boilers associated with propulsion are to be provided with an automatic control system for the purpose of automatically controlling the combustion, feed-water and firing functions, the arrangements are to be capable of automatically and safely satisfying the steam requirements demanded from the boiler under normal evaporation between minimum and maximum firing rates and be able to maintain complete and stable combustion at the minimum rate of firing or during any sudden change in steam demand.

5.8.2 Excess Steam

To prevent a build-up of excessive main-boiler steam which might occur when all burners are in service and the burners are at the minimum firing rate, one of the following arrangements or equivalent is to be provided.

(a) Burner sequencing, which may require automatic control of one or more, but not necessarily all, burners in the boiler.

(b) An automatic steam dump system, unloading to a condenser of adequate size.

For long-term port operation at low loads, the excess burner capacity may be secured.

5.8.3 Fuel oil System

A master fuel-oil cut-off valve is to be provided in the fuel supply to each boiler. The closing of the master fuel-oil valve is to be alarmed at the centralized control and monitoring station. Before any attempt at restarting after a complete flame out, manual intervention is to be initiated to determine the cause of flame failure and to reset the master fuel-oil valve. The master fuel oil valve is to automatically close upon the following conditions:

(a) Flame failure of all burners (where multiple burners are provided, failure of a single burner is to cause the automatic closing of its corresponding burner valve).

(b) Low-low water level condition. The additional low-low water level sensor is to be independent from the low water level sensor (which is to set an alarm only when activated). See 4.4.1(c) of Part V.

(c) The conditions as specified in 4.4.1(d) and 4.4.1(f) of Part V.

5.8.4 Combustion-control Safety

(a) Each burner is to be fitted with a flame scanner designed to automatically shut off the fuel-oil supply to the burner in the event of flame failure. The flame failure shut- off is to be capable of shutting off the oil supply to the burner within 6 seconds following flame extinguishment. In case of failure of the flame scanner, the fuel to the burner is to be shut off automatically. See 5.8.4(f) of this Part.

(b) Where boilers are fitted with an automatic ignition system, a timed boiler purge with all air registers open is required prior to ignition of the initial burner. The boiler purge may be initiated manually or automatically. The purge time is to be based on a minimum of four air changes of the combustion chamber and furnace passes.It is to be proven that the forced draft fan is operating and the air registers and dampers are open before the purge time commences.

(c) Means provided to bypass the flame- scanner control system temporarily during a trial-for-ignition period is to be limited to 15 seconds from the time the fuel reaches the burners. Except for this trial- for-ignition period there is to be no means provided to by-pass one or more of the burner flame scanner systems unless the boiler is being locally controlled.

(d) Where boilers are fitted with an automatic ignition system, and where residual fuel oil is used, means are to be provided for lighting off the burners with igniters lighting properly-heated residual fuel oil. Alternatively, the burners may be lighted off with a light oil used as a pilot to ignite residual fuel oil. If all burners experience a flame failure, the initial burner is to be brought back into automatic service only in the low-firing position. To avoid the possibility of a false indication due to the failure of the flame scanner in the "flame-on" mode, the initial light-off burner is to be fitted with dual scanners or a scanner of the self-checking type.

(e) Alarm off-limit conditions of burner primary-air pressure or atomizing-steam pressure are to be alarmed at the centralized control and monitoring station.

(f) Immediately after normal shutdown of the boiler, an automatic purge of the boiler equal to the volume and duration of the pre-purge is to occur. Following actuation of the required safeties which causes closing of the master fuel valve, the air flow to the boiler is not to automatically increase; postpurge in such cases is to be carried out under manual control.

5.8.5 Boiler Limit Systems

The alarms for forced-draft failure and for low-water level are to be installed in association with limiting controls which are to prevent start-up and cause shut-down when unsafe firing conditions exist. Manual resetting of the control system is to be required before the boiler can be restarted.

5.8.6 Boiler Program Control

(a) Where automatically-started boilers are installed, they are to be provided with a programmed control to assure a safe cycle of operation upon initial starting and cycling between temperature and pressure limits.

(b) The programmed control is to be designed to cycle the boiler in accordance with a predetermined sequence and, in addition to the automatic boiler purge in 5.8.4(b) of this Part, is to include the following events.

(i) Ignition (spark coming on) is to precede the opening of the fuel valve.

(ii) Where it is necessary to cut burners in and out to handle the load on the boiler and the controls are provided to modulate the air-fuel ratio, the automatic boiler purge period is to start with the modulating control in the high-firing position and ignition is not to be turned on until the modulating control has returned to the low-firing position.

5.8.7 Independent Manual Control

Independent manual control of the boilers is to be demonstrated during the tests or trial to the satisfaction of the Surveyor. This is to include demonstration of independent manual control through the full maneuvering range and transfer from automatic control.

5.9 Fuel Settling and Daily Service Tanks

5.9.1 Fuel oil settling or daily service tanks are to be capable of holding sufficient fuel oil for 24 hours operation at normal power.

5.9.2 Tanks are to contain sufficient fuel oil for only 8 hours operation at normal power if automatic filling is provided.A low level warning for each tank is to be provided at the centralized control and monitoring station.

5.10 Propulsion and Associated Machinery Start-up

5.10.1 Starting of the propulsion and associated machinery or preparing the engines for sea may be performed manually, but if done automatically this is to be programmed that the propulsion machinery cannot be started until all engine auxiliaries are functioning correctly.

5.10.2 Start-up sequence, especially for steam-driven propulsion vessels, is to be arranged to require monitoring or direct control, by an operator, who is to be responsible that instructions from machinery builders are followed during the various steps in the program.

5.11 Monitoring Station in Engineer's Accommodation

5.11.1 At least one alarm monitoring station is to be provided in the engineer's public spaces. Each such station is to be provided with alarms for fire, high bilge-water level in the propulsion-machinery space, and summary-alarms for the propulsion and its associated machinery (including propulsion oil fired boilers). Any of the alarm conditions as listed in Tables VIII 4-3 through VIII 4-10, as applicable, are to activate the specific machinery summary-alarm. Additionally, alarm monitoring stations through a selector switch are to be provided in each individual engineer's stateroom and arranged so that at least one alarm monitoring station is active at all times. Selective switching is not to be provided for the fire alarms. The fire alarm is to be separate and distinct from the alarms of any other systems. Fire, high bilge-water level and the specific machinery summary-alarms are to be audible in the engineer's public spaces and staterooms until manually silenced at the centralized control and monitoring station in the propulsion-machinery space (centralized monitoring station for **CAB** ships). See 5.3.3 and 5.4 of this Part.

5.11.2 The arrangements in 5.11.1 may be modified to permit the audible machinery summary-alarm and high bilge water level alarm to be silenced locally at the alarm monitoring stations in the engineer's public spaces and staterooms provided the associated visual alarm is not extinguished. Also, the arrangements are to be such that if the audible alarm is not also silenced manually at the centralized control and monitoring station in a reasonable period of time, the system is to activate the engineer's alarm audible in the engineer's accommodations. The means for silencing locally at the alarm monitoring stations is not to be provided for fire alarms.

5.12 Fire-fighting Station and Arrangements for Propulsion Machinery-space Fires

5.12.1 The fire-fighting station is to be located outside the propulsion-machinery space. However, consideration may be given to the installation of the fire-fighting control station within the room housing the centralized control and monitoring station, as referenced in 4.3 provided that the room's fire protection boundaries including glazing and doors is in compliance with Regulations II-2/9.2.2, II-2/9.2.3, and II-2/9.2.4 of SOLAS, as applicable, and the room's doors facing the propulsion-machinery space are self-closing. Additionally, the ventilation system to such room is to be separate from other systems serving the propulsion-machinery space and its ventilation inlet is to be taken from a safe space outside the propulsion-machinery space. There is to be a protected access from the fire-fighting station to the open deck.

5.12.2 Fire fighting controls

The fire-fighting station is to be provided with remote manual controls for the operations detailed in the following list. These controls are to be capable of being tested to the satisfaction of the Surveyor.

(a) Stopping the machinery-space ventilation fans and closing of openings.

(b) Stopping all fuel-oil pumps and forced-draft fans.

(c) Closing machinery-space skylights.

(d) Closing machinery-space watertight and fire-resistant doors.

(e) Closing propulsion-machinery space fuel oil tanks suction valves.

(f) Starting the emergency generator or connecting a source of emergency power, unless automatic operation is provided.

(g) Operation of a fire pump located outside the propulsion-machinery space, including associated valves necessary to deliver required capacity to the fire main.

(h) Releasing of the fire-fighting media for the propulsion-machinery space. This release is to be manual and not initiated automatically by signals from the fire-detecting system.

(i) Stopping circulating pumps for thermal oil heating systems. (See 4.7.2(b) of Part VI)

5.12.3 Fire Detection and Alarm Systems

The propulsion-machinery space is to be provided with a fixed fire detection and alarm system complying with Regulation II-2/7.4 of SOLAS 1974, as amended. This fixed fire detection and alarm system may be combined with other fire detection and alarm system required on board the vessel. Additionally, for fired boilers, fire in the air supply casings and exhausts (uptakes) is to be alarmed.

5.12.4 Fire Alarm Call Points

Manually operated fire alarm call points are to be provided in, and in the passageways leading to, the propulsion-machinery spaces.

5.12.5 Portable Fire Extinguishers

In addition to the portable fire extinguishers located in the machinery space as required by 8.4 of Part IX, there is to be an equal number of hand portable extinguishers located in the fire-fighting station or other suitable locations for extinguishing small fires, thus preserving the capability of the fire-fighting system of the ship.

5.13 Communications

The communication system required by 2.8.8 is to include the engineer's accommodations area.

5.14 Sea Trials

5.14.1 In addition to the requirements in 4.15.1 through 4.15.5, and after the propulsion machinery has been running for at least 2 hours, the ability to control the machinery functions correctly for all loads and engine maneuvers without any manual intervention in the propulsion-machinery space is to be demonstrated for an additional period of 4 hours.

5.14.2 Propulsion machinery or engine response to throttle control demands is to be tested during the trials and after final adjustments to demonstrate that no part of the plant or engine is jeopardized by the rate at which the throttle is moved from one extreme position to the other.

5.14.3 The loss of electric power is to be simulated with the main engine running. On restoration of power, the ship's service auxiliaries and main engines are to be started from the centralized control and monitoring station and are to operate satisfactorily without local adjustment.

Chapter 6

Machinery Operated from Navigating Bridge – CAB Symbol

6.1 General

The requirements in this chapter apply to ships of all lengths capable of operating as **CAU** symbol but because of their compact propulsion-machinery space design are not fitted with the means to control the propulsion and its associated machinery from a centralized location within the propulsion-machinery space. Except as noted herein, the requirements in Chapter 1 through Chapter 5, as applicable, are to be complied with.

6.2 Station in Navigating Bridge

Controls, alarms and displays as listed in 5.3 are to be provided on the station in the navigating bridge. See Table VIII 2-1. Additionally, for vessels having non-integrated propulsion machinery, the means for starting, stopping and transferring essential auxiliary pumps (see 4.6) are to be fitted at the station in the navigating bridge and may also be fitted in the centralized monitoring station.

6.3 Centralized Monitoring Station

6.3.1 The requirements in 5.4 are applicable except that the centralized station need not be provided with propulsion controls but is to include displays and alarms needed for the monitoring of the propulsion machinery and associated ship' service systems including the electrical power generating machinery, fired boilers associated with propulsion and electrical power generating machinery, and monitoring of propulsion-machinery space. The monitoring system is to provide the same degree of equivalency as if the propulsion-machinery space was manned. See Tables VIII 4-2 through VIII 4-10 for required safety provisions, alarms and displays to be fitted at this station.

6.3.2 Additionally, the power supply transfer devices for the control and monitoring system, and safety systems disconnect devices are to be fitted at this station.

6.4 Communications

Communications as required in 5.13 is also to include the centralized monitoring station in the propulsion-machinery space.

6.5 Sea Trials

In addition to the trials per 5.14, successful operation of the propulsion machinery is to be demonstrated with the propulsion-machinery space unattended for a period of at least 12 hours.

Chapter 7

Automatic or Remote Control Systems for Other Machinery/Systems

7.1 Centralized System for Cargo and Ballast Water Handling

7.1.1 The additional class notation **CCB** is assigned to ships carrying liquid cargo in bulk fitted with a centralized system for handling liquid cargo and ballast and complying with the requirements of this section.

7.1.2 The documents listed in Table VIII 7-1 are to be submitted to the Society for approval. The Society reserves the right to require additional plans or information in relation to the specific characteristics of the installations.

7.1.3 Design and construction requirements

(a) The control station is to be located such as to allow visibility of the cargo tank deck area, and in particular of the cargo loading and unloading ramps.

(b) The station is preferably to be situated in the accommodation area; should this be impracticable, the control station is to be bounded by A-60 class fire-resisting bulkheads and provided with two escapes.

(c) It is be possible from the control station to convey orders to crew members on deck and to communicate with the navigating bridge, with cargo handling spaces, with the engine room and with the propulsion control room.

(d) Where the control station is located in the cargo area, two complete sets of protective clothing are always to be readily available together with three breathing apparatuses.

(e) It is to be possible to carry out the following operations from the control station:
   (i) opening and closing of valves normally required to be operated for loading, unloading and transfer of cargo and ballast (however, the opening and closing of valves is not required for the ends of cargo loading and unloading arrangements)
   (ii) starting and stopping of cargo pumps, stripping pumps and ballast pumps (alternative solutions may be considered in the case of pumps powered by turbines)
   (iii) regulation, if foreseen, of the number of revolutions of cargo pumps, stripping pumps and ballast pumps.

(f) The control station is to be fitted with indicators showing:
   (i) (open/closed) position of valves operated by remote control
   (ii) state (off/on) of cargo pumps, stripping pumps and ballast pumps
   (iii) number of revolutions of cargo pumps, stripping pumps and ballast pumps where they may be operated at adjustable speeds
   (iv) delivery pressure of the hydraulic plant for the operation of cargo pumps, stripping pumps and ballast pumps
   (v) delivery and suction pressure of cargo pumps, stripping pumps and ballast pumps
   (vi) pressure of the ends of cargo loading and unloading arrangements
   (vii) oxygen level, temperature and pressure of the inert gas, where the operation of the inert gas system is required or envisaged at the same time as loading/unloading
   (viii) level in cargo and ballast tanks (relaxation of this requirement may be permitted for double bottom ballast tanks of reduced capacity and limited depth)
   (ix) temperature in cargo tanks provided with heating or refrigeration.

(g) The cargo control station is to be fitted with visual and audible alarms signaling the following:
  (i) high level, and where requested very high level, in cargo tanks
  (ii) high pressure in cargo tanks, if required by the Rules
  (iii) low delivery pressure of the hydraulic plant for the operation of pumps and valves
  (iv) high vacuum in cargo tanks, if required by the Rules
  (v) high pressure in the cargo and ballast lines
  (vi) high and low temperature for cargo tanks fitted with heating and refrigerating systems
  (vii) high oxygen level, high temperature, and high and low pressure of inert gas, if foreseen
  (viii) high level in a bilge well in cargo and ballast pump rooms
  (ix) high concentration of explosive vapours (exceeding 30% of the lower flammable limit) in spaces where cargo is handled
  (x) high temperature of gas-tight seals with oil glands for runs of shafts, where these are foreseen through bulkheads or decks, for the operation of cargo and ballast pumps.

7.1.4 Inspection and testing

(a) Equipment and systems are to be inspected and tested in accordance with the applicable requirements of the Rules relative to each piece of equipment of the system used for the centralized control.

(b) Following installation on board, remote control, indication and alarm systems are to be subjected to operational tests in the presence of the Surveyor.

7.2 Valve Remote Control System

7.2.1 The valve remote control system is to comply with the following requirement in addition to the requirement of chapter 1 through chapter 3, as applicable.

(a) Valves are to be controlled from the remote control station and operated properly.

(b) Means of indication of valve fully open/closed or valve status are to be provided at the remote control station. Generally, a red light indicates a valve is fully closed and a green light indicates a valve is fully open. The remote valve position indication is obtained from the closing signal transmitted by the pressure switch of the hydraulic piping as well as the valve position signal received from the volume indicator and flow meter.

(c) The valve remote control system is to be designed on the fail-safe principle. When an alarm is activated due to system failures, unless practically impossible, the valve is to continue to operate at the last ordered position under this kind of circumstance. The power failure (electrical, pneumatic and hydraulic), especially, shall not result in the change of valve position. Valves which are only allowed to be opened during operation are to return to their closing position while the failures mentioned above occur.

(d) The valve remote control system is to be completely independent of other safety system and alarm systems. When the valve remote control system malfunctions, other system shall continue to operate normally.

(e) The valve remote control system is to be designed so that any failure occurred during operation will not result in other failures and minimize the risk of hazards as far as possible.

(f) Means of failure detection and alarm are to be provided. (Power failures, pneumatic failures, hydraulic failures, liquid level, low pressure, and etc.)
  (i) All alarms are to be both audible and visual. Red lights are generally adopted to indicate severe alarms while yellow lights are adopted for general failures. Audible alarms are to be of sufficient loudness.
  (ii) Alarms of the valve remote control system are to be activated for all failures occurred simultaneously. Acknowledging of one particular alarm is not to interrupt acknowledging of other alarms.
  (iii) Means of silencing audible alarms are to be provided and the alarm signal is to be silenced upon acknowledgement of the alarm (such as pressing the silencing button of this system). Silencing alarms

is not to disable the visual signal, but altering the pattern of the signal (such as from steady light to flashing light) is allowed. Such visual signal is to be distinguishable. Meanwhile, the visual signal shall remain activated until the failure condition is rectified. The alarm channel is to recover to its normal working condition after the failure is rectified.

(iv) The indication and alarm of the valve remote control system are to be provided with self-diagnosis function and is capable of testing their own failure to avoid false alarm or alarm failure such as test buttons with lamps.

(v) Valve limiting switches are to be provided for electric or electric hydraulic valve remote control system. The actuators are to be stopped automatically when the valve switches triggers.

(vi) Under the emergency condition, the valve remote control system is to be provided with valve position indication devices which normally adopt mechanical types.

(vii) The valve remote control system operated in the hazardous area is to be of explosion proof type in accordance with 1.10 of Part VII for oil tanker, product oil tanker, chemical tanker and offshore platforms.

(viii) The valve remote control system is to be capable of opening/closing valves by using local hydraulic hand pump or other manual devices. All actuators are to be installed at locations which are easily accessible and comply with requirement specified in 4.5 of Part VI of the Rules.

(ix) For hydraulic or electric hydraulic system, the alarm is to be activated when the pressure of operating pump or the system is lower than 20% of the normal working pressure.

(x) The system is to be automatically supplied by a standby source of electrical power in the event of failure of main source of electrical power.

(xi) Computer-based system, PLC and software are to comply with the requirement as specified in Part VIII of the Rules, as applicable.

(g) The hydraulic system is to comply with the requirement specified in 2.10 and 2.11 of this Part, as applicable, in addition to 4.5 of Part VI of the Rules.

(h) The pneumatic system is to comply with the requirement specified in 2.10 and 2.11 of this Part, as applicable.

7.2.2 Inspection and testing

(a) Equipment and systems are to be inspected and tested as follows:

(i) Visual inspection

Refer to item 1 of Table VIII 4-1.

(ii) High voltage test

Refer to item 8 of Table VIII 2-2.

(iii) Insulation resistance test

Refer to item 7 of Table VIII 2-2.

(iv) Functions tests , including but not limited to the following, shall be carried out to verify the function of the system complies with the requirement of approved documents.

(1) Remote open/close test (including indication of valve position)

(2) Emergency (local control) open/close test

(3) Power failure protection test (verifying if the valve position remains at original or preset open/closed position due to electrical, pneumatic, or hydraulic power failure)

(4) Alarm test (electric source, power source pressure, temperature, oil filter blockage, etc.)

(v) The piping system shall be tested in accordance with chapter 7 of Part VI of the Rules

Table VIII 7-1
Documents to be submitted

No.	A/I (1)	Item
1	I	Schematic drawing of the installation
2	I	Plan of the location and arrangement of the control station
3	A	List of remote control devices
4	A	List of alarms
5	I	List of the equipment (sensors, transducers, etc.) and automation systems (alarm systems, etc.) envisaged with indication of the Manufacturer and of the type of equipment or system
6	A	Line diagram of power supply circuits of control and monitoring systems, including: • circuit table, in the case of electrical power supply • specification of service pressures, diameter and thickness of piping, materials used, etc. in the case of hydraulic or pneumatic power supply

Note:
(1) A = To be submitted for approval;
I = To be submitted for information.

Chapter 8

Integrated Automation System

8.1 Definitions

8.1.1 Integrated Automation System(IAS)

An Integrated Automation System (IAS) is a combination of computer-based systems with redundant architecture, which are interconnected in order to allow communication between computer systems; between computer systems and monitoring, control, and ship management systems; and to allow centralized access to information and/or command/control. For example, an integrated system may consist of systems capable of performing passage execution (e.g., steering, speed control, traffic surveillance, voyage planning); machinery management and control (e.g., power management, machinery monitoring, fuel oil/lubrication oil transfer); cargo operations (e.g., cargo monitoring, inert gas generation, loading/ discharging); etc. Functions are integrated to reduce the need for hardware and software functions and to reduce interface requirements.

8.1.2 Module Technology

The IAS comprises different functions modules and the system can be expandable by adding more modules of different functions. The function module includes hardware module and software module. Module technology is based on the identical basic software platform, free flow of information. It reduces spare parts.

8.2 System Requirements

In addition to the relevant requirements in Chapter 2 and Chapter 3 the following is to be complied with:

8.2.1 Effective operation

Operation with an integrated automation system is to be at least as effective as it would be with individual stand-alone equipment or systems.

8.2.2 Integrated automation system failure

Failure of one part of the integrated automation system (individual module, equipment or subsystem) is to not affect the functionality of other parts, except for those functions directly dependent on the defective part.

8.2.3 Multi-function displays and controls

Where multi-function displays and controls are used, they are to be redundant and interchangeable. The number of units at control stations is to be sufficient to ensure that all functions may be provided with any one unit out of operation, taking into account any functions which are required to be continuously available.

8.2.4 Hardware redundancy

Common hardware in an integrated automation system serving many subsystems (e.g., monitor, keyboard, microprocessor, etc.) is to be duplicated or otherwise provided with a means of backup.

8.2.5 Interfaces

Standard interfaces are to be used for the data exchange between the different systems. The network is to be designed in compliance with an international standard such as IEC 61158 or IEC 61784. See also 3.6.1.

8.2.6 Control redundancy

An alternative means of operation, independent of the integration, is to be available for all essential functions.

8.3 FMEA

Where the integration involves control functions for essential services or safety functions, including fire, passenger, crew, and ship safety, an FMEA is to be carried out. The FMEA is to demonstrate that the integrated system will "fail-safe", and that essential services in operation will not be lost or degraded.

8.4 Documentation

Documentation is to be submitted to demonstrate that the installed integrated automation system has been designed, manufactured and tested in accordance with 1.2 and 8.2. This documentation is to be submitted by a single party responsible for the integration.

Tel: *+886 2 25062711*
Fax: *+886 2 25074722*
E-mail: *cr.tp@crclass.org*
Website: *http://www.crclass.org*
© CR – All rights reserved

財團法人驗船中心
CR CLASSIFICATION SOCIETY

RULES FOR THE CONSTRUCTION AND CLASSIFICATION OF STEEL SHIPS 2022

PART IX – FIRE PROTECTION, DETECTION AND EXTINCTION

July 2022

財團法人驗船中心
CR CLASSIFICATION SOCIETY

RULES FOR THE CONSTRUCTION AND CLASSIFICATION OF STEEL SHIPS 2022

PART IX – FIRE PROTECTION, DETECTION AND EXTINCTION

July 2022

RULES FOR THE CONSTRUCTION AND CLASSIFICATION OF STEEL SHIPS

PART I CLASSIFICATION AND SURVEY

PART II HULL CONSTRUCTION AND EQUIPMENT

PART III SPECIAL SERVICE AND TYPE OF SHIPS

PART IV MACHINERY INSTALLATIONS – CONSTRUCTION AND SHAFTING

PART V BOILERS, PRESSURE VESSELS, THERMAL OIL HEATERS AND INCINERATORS

PART VI PIPING AND PUMPING SYSTEMS

PART VII ELECTRICAL INSTALLATIONS

PART VIII AUTOMATIC OR REMOTE CONTROL AND MONITORING SYSTEMS

PART IX FIRE PROTECTION, DETECTION AND EXTINCTION

PART X REFRIGERATED CARGO INSTALLATIONS

PART XI MATERIALS

PART XII WELDING

PART XIII NAVIGATIONAL SAFETY SYSTEMS

PART XIV GOAL-BASED SHIP CONSTRUCTION STANDARDS SHIPS

PART XV HULL CONSTRUCTION AND EQUIPMENT FOR SHIPS LESS THAN 90 M IN LENGTH

List of major changes in Part IX from 2019 edition

1.5.56	Amend No.2
8.4.1(b)(ii)	Amend No.2
14-1.3.1	Amend No.2

Acronyms

AIS	Automatc Identification System
ANTS	Automatic Navigation and Track-keeping System
ARPA	Automatic Radar Plotting Aid
BC Code	Code of Safe Practice for Solid Bulk Cargoes
BNWAS	Bridge Navigational Watch Alarm System
CA	Controlled Atmosphere
CDI	Chemical Distribution Institute
COW	Crude Oil Washing
CPA	Closest Point of Approach
CPP	Controllable Pitch Propeller
CSC	International Convention for Safe Containers
CSR	Common Structural Rules
CTOD	Crack Tip Opening Displacement
ECDIS	Electronic Chart Display and Information System
EEBD	Emergency Escape Breathing Devices
ENC	Electronic Navigational Chart
ESP	Enhance Survey Plan
ETA	Emergency Towing Arrangement
FEU	Forty-foot Equivalent Unit
FMEA	Failure Mode & Effect Analysis
FRP, GRP	Fibreglass Reinforced Plastics
FTP Code	International Code for Application of Fire Test Procedures
GBS	Goal-Based ship construction Standards
GDC	General Dry Cargo
GLONASS	Global Navigation Satellite System
GMDSS	Global Maritime Distress and Safety System
GPS	Global Positioning System
HAZ	Heat Affected Zone
HHP anchor	High Holding Power anchor
HSC	High Speed Craft
HTS	High Tensile Steel
IACS	International Association of Classification Societies
IBC Code	International Code for the Construction and Equipment of Ships Carrying Dangerous Chemicals in Bulk

ICS	The International Chamber of Shipping
IEC	International Electrotechnical Commission
IGC Code	International Code for the Construction and Equipment of Ships Carrying Liquefied Gases in Bulk
ILO	International Labour Organization
IMDG Code	International Maritime Dangerous Goods Code
IMO	International Maritime Organization
ISO	International Standards Organization
LAN	Local Area Network
LCS	Loading Computer System
LEL	Lower Explosive Limit
LRIT	Long-range Identification and Tracking of ships
MARPOL	International Convention for the Prevention of Pollution from Ships
MARVS	Maximum Allowable Relief Valve Setting
MEPC	Marine Environment Protection Committee
MLC	Maritime Labour Convention
MSC	Maritime Safety Committee
NDT	Nondestructive Testing
OCIMF	The Oil Companies International Marine Forum
OOW	Officer Of the Watch
PA	Public Address
PMA	Permanent Means of Access
PMS	Planned Machinery Maintenance Scheme
RH	Relative Humidity
PSPC	Performance Standard for Protective Coating
SENC	System Electronic Navigational Chart
SHHP anchor	Super High Holding Power anchor
SOLAS	International Convention for the Safety of Life at Sea
SRE	Ship Recycling
STCW	International Convention on Standards of Training, Certification and Watch-keeping for Seafarers
STS operation	Ship-To-Ship operation
S-VDR	Simplified Voyage Data Recorder
TCPA	Time to CPA
TEU	Twenty-foot Equivalent Unit
THD	Total Harmonic Distortion

TMCP	Thermo-Mechanical Controlled Processing
UPS	Uninterruptible Power Supply
VDR	Voyage Data Recorder
VEC	Vapor Emission Control

RULES FOR THE CONSTRUCTION AND CLASSIFICATION OF STEEL SHIPS

PART IX
FIRE PROTECTION, DETECTION AND EXTINCTION

CONTENTS

Chapter 1 General 1

1.1 General 1
1.2 Equivalency and Exemptions 3
1.3 Plans and Documents 3
1.4 Type Approval 3
1.5 Definitions 4
1.6 Fire Safety Objectives and Functional Requirements 10

Chapter 2 Probability of Ignition 11

2.1 Arrangements for Oil Fuel, Lubrication Oil and Other Flammable Oils 11
2.2 Arrangements for Gaseous Fuel for Domestic Purpose 14
2.3 Miscellaneous Items of Ignition Sources and Ignitability 14
2.4 Cargo Areas of Tankers 14

Chapter 3 Fire Growth Potential 21

3.1 Control of Air Supply and Flammable Liquid to the Space 21
3.2 Fire Protection Materials 22

Chapter 4 Smoke Generation Potential and Toxicity 24

4.1 Paints, Varnishes and Other Finishes 24
4.2 Primary Deck Coverings 24

Chapter 5 Detection and Alarm 25

5.1 General Requirements 25
5.2 Initial and Periodical Tests 25
5.3 Protection of Machinery Spaces 25
5.4 Protection of Accommodation and Service Spaces and Control Stations 26
5.5 Protection of Cargo Spaces in Passenger Ships 27
5.6 Manually Operated Call Points 27
5.7 Fire Patrols in Passenger Ships 27
5.8 Fire Alarm Signalling Systems in Passenger Ships* 27
5.9 Protection of Cabin Balconies on Passenger Ships 28

Chapter 6 Control of Smoke Spread **29**

6.1 Protection of Control Stations Outside Machinery Spaces 29
6.2 Release of Smoke from Machinery Spaces 29
6.3 Draught Stops 29
6.4 Smoke Extraction Systems in Atriums of Passenger Ships 29

Chapter 7 Containment of Fire **30**

7.1 Thermal and Structural Boundaries 30
7.2 Penetration in Fire-Resisting Divisions and Prevention of Heat Transmission 45
7.3 Protection of Openings in Fire Resisting Divisions 45
7.4 Protection of Openings in Machinery Spaces Boundaries 48
7.5 Protection of Cargo Space Boundaries 49
7.6 Ventilation Systems 49

Chapter 8 Fire Fighting **54**

8.1 Water Supply Systems 54
8.2 Portable Fire Extinguishers* 58
8.3 Fixed Fire-Extinguishing Systems 58
8.4 Fire Extinguishing Arrangements in Machinery Spaces 59
8.5 Fire Extinguishing Arrangements in Control Stations, Accommodation and Service Spaces 61
8.6 Fire Extinguishing Arrangements in Cargo Spaces 62
8.7 Cargo Tank Protection 64
8.8 Protection of Cargo Pump Rooms 64
8.9 Fire-Fighter's Outfits 64

Chapter 9 Structural Integrity **66**

9.1 Material of Hull, Superstructures, Structural Bulkheads, Decks and Deckhouses 66
9.2 Structure of Aluminium Alloy 66
9.3 Machinery Spaces of Category A 66
9.4 Materials of Overboard Fittings 66
9.5 Protection of Cargo Tank Structure Against Pressure or Vacuum in Tankers 66

Chapter 10 Escape **68**

10.1 Notification of Crew and Passengers 68
10.2 Means of Escape 68

Chapter 11 Operational Requirements **75**

11.1 Operational Readiness and Maintenance 75
11.2 Instructions, Onboard Training and Drills 76
11.3 Fire Safety Operational Booklets 77

Chapter 12 Alternative Design and Arrangements **79**

12.1 General 79
12.2 Engineering Analysis 79

12.3 Evaluation of the Alternative Design and Arrangements 79
12.4 Re-evaluation due to Change of Conditions 80

Chapter 13 Special Requirements 81

13.1 Helicopter Facilities 81
13.2 Carriage of Dangerous Goods* 83
13.3 Protection of Vehicle, Special Category and Ro-Ro Spaces 90
13.4 Requirements for Vehicle Carriers Carrying Motor Vehicles with Compressed Hydrogen or Natural Gas in their Tanks for their Own Propulsion as Cargo 94
13.5 Casualty Threshold, Safe Return to Port and Safe Areas 95
13.6 Design Criteria for Systems to Remain Operational After a Fire Casualty 96
13.7 Safety Centre on Passenger Ships 97

Chapter 14 Ships not Engaged on International Voyages 99

14.1 General 99
14.2 Equivalency 99
14.3 Plans and Supporting Data 99

Chapter 14-1 Ships not Engaged on International Voyages: Passenger Ships 100

14-1.1 General 100
14-1.2 Probability of Ignition 100
14-1.3 Fire Growth Potential 100
14-1.4 Smoke Generation Potential and Toxicity 100
14-1.5 Detection and Alarm 101
14-1.6 Control of Smoke Spread 101
14-1.7 Containment of Fire 101
14-1.8 Fire Fighting 105
14-1.9 Structural Integrity 106
14-1.10 Escape 107
14-1.11 Operational Requirements 108
14-1.12 Alternative Design and Arrangements 108
14-1.13 Special Requirements 108

Chapter 14-2 Ships not Engaged on International Voyages: Cargo Ships Other than Tankers 110

14-2.1 General 110
14-2.2 Requirements for Cargo Ships of 500 Gross Tonnage and Upwards 110
14-2.3 Requirements for Cargo Ships of less than 500 Gross Tonnage but not less than 100 Gross Tonnage ... 111
14-2.4 Requirements for Cargo Ships of less than 100 Gross Tonnage 112

Chapter 14-3 Ships not Engaged on International Voyages: Tankers 113

14-3.1 General 113

Chapter 1
General

1.1 General

1.1.1 Introduction

This Part is to specify the requirements for fire protection, fire detection and fire extinction.

1.1.2 General application

(a) Requirements for convention ships

The requirements in Chapter 2 to Chapter 13 of this Part apply to ships engaged on international voyages. Unless expressly provided otherwise, the requirements in Chapter 2 to Chapter 13 of this Part do not apply to the following ships:

(i) ships of war and troopships;

(ii) ships not propelled by mechanism means;

(iii) woodenships of primitive build;

(iv) pleasure yachts not engaged in trade; and

(v) fishing vessels.

(b) Cargo ships of less than 500 gross tonnage are to comply with the requirements in Chapter 2 to Chapter 13 of this Part. Where this is impractical, special consideration may be given by the Society.

(c) Ships not engaged on international voyages are to comply with the requirements of Chapter 14 of this Part.

(d) For vessels not propelled by mechanical means, e.g., barges, the requirements of 14-2.3 of this Part may be applicable. The extent and degree of application of the relevant requirements of Chapters 2 to 13 of this Part may be modified considering their construction, purpose, etc. These requirements may not apply to unmanned barges.

(e) Others

(i) Centralized bridge or automatic controls

When it is proposed to apply centralized bridge or automatic controls to the propulsion machinery and essential auxiliaries and it is intended that the engine and/or boiler room is not continuously manned at sea, the requirements stipulated in 5.12 of Part VIII of the Rules are to be complied with.

(ii) Offshore service units

The requirements of offshore service units are to be referred to the relevant requirements in Chapter 9 of Code for the Construction and Equipment of Mobile Offshore Drilling Units (herein after referred to as the MODU Code), as amended.

(f) Where the requirements of this Part are impractical, special consideration may be given by the Society.

1.1.3 Applicable requirements depending on ship type, unless expressly provided otherwise:

(a) requirements not referring to a specific ship type are to apply to ships of all types; and

(b) requirements referring to "tankers" are to apply to tankers subject to the requirements specified in 1.1.4 below.

1.1.4 Application of requirements for tankers

(a) Low flash point cargoes (flashpoint not exceeding 60°C)

Requirements for tankers in this Part are to apply to tankers carrying crude oil or petroleum products having a flashpoint not exceeding 60°C (closed cup test), as determined by an approved flashpoint apparatus, and a Reid vapour pressure which is below the atmospheric pressure or other liquid products having a similar fire hazard.

(b) Additional fire hazards cargoes

Where liquid cargoes other than those referred to in 1.1.4(a) or liquefied gases which introduce additional fire hazards are intended to be carried, additional safety measures are to be required, having due regard to the provisions of the International Bulk Chemical Code (hereinafter referred to as the IBC Code), the International Gas Carrier Code (hereinafter referred to as the IGC Code), as appropriate.

(i) A liquid cargo with a flashpoint of less than 60°C for which a regular foam fire-fighting system complying with the Fire Safety Systems Code (hereinafter referred to as FSS Code) is not effective, is considered to be a cargo introducing additional fire hazards in this context. The following additional measures are required:

(1) the foam is to be of alcohol resistant type;

(2) the type of foam concentrates for use in chemical tankers is to be to the satisfaction of the Society taking into account the guidelines developed by the International Maritime Organization* (hereinafter referred to as the IMO); and

* Refer to the Revised Guidelines for performance and testing criteria and surveys of foam concentrates for fixed fire-extinguishing systems (MSC.1/Circ.1312 and Corr.1, as may be amended).

(3) the capacity and application rates of the foam extinguishing system are to comply with chapter 11 of the IBC Code, except that lower application rates may be accepted based on performance tests. For tankers fitted with inert gas systems, a quantity of foam concentrate sufficient for 20 min of foam generation may be accepted.

* Refer to the Information on flashpoint and recommended fire-fighting media for chemicals to which neither the IBC nor BCH Codes apply (MSC/Circ.553, as may be amended).

(ii) For the purpose of this paragraph, a liquid cargo with a vapour pressure greater than 0.1013 MPa (1.013 bar) absolute at 37.8°C is considered to be a cargo introducing additional fire hazards. Ships carrying such substances are to comply with paragraph 15.14 of the IBC Code. When ships operate in restricted areas and at restricted times, the Society concerned may agree to waive the requirements for refrigeration systems in accordance with paragraph 15.14.3 of the IBC Code.

(c) Liquid cargoes with a flash point exceeding 60°C other than oil products or liquid cargoes subject to the requirements of the IBC Code are considered to constitute a low fire risk, not requiring the protection of a fixed foam extinguishing system.

(d) Tankers carrying petroleum products with a flashpoint exceeding 60°C (closed cup test), as determined by an approved flashpoint apparatus, are to comply with the requirements provided in 8.1.1(d)(iv) and 8.9.2(c) and the requirements for cargo ships other than tankers, except that, in lieu of the fixed fire extinguishing system required in 8.6, they are to be fitted with a fixed deck foam system which is to comply with the provisions of the FSS Code.

(e) Combination carriers are not to carry cargoes other than oil unless all cargo spaces are empty of oil and gas-freed or unless the arrangements provided in each case have been approved by the Society taking into account the guidelines developed by the IMO.*

* Refer to the Revised Guidelines for inert gas systems (MSC/Circ.353), as amended by MSC/Circ.387, as may be amended.

(f) Chemical tankers and gas carriers are to comply with the requirements for tankers, except where alternative and supplementary arrangements are provided to the satisfaction of the Administration, having due regard to the provisions of the IBC Code and the IGC Code, as appropriate.

1.2 Equivalency and Exemptions

1.2.1 Equivalency

(a) Alternative construction, equipment, arrangement and materials may be accepted by the Society, provided that the Society is satisfied that such construction, equipment, arrangement and materials are equivalent to those required in this Part in accordace with Chapter 12.

(b) Fire fighting appliances such as fire hoses, extinguishers, gas cylinders, emergency fire pumps, safety lamps, breathing apparatuses, etc., which have been approved by a government or by an organization on behalf of a government as complying with the provisions of SOLAS and its amendment in force, may be accepted as complying with the requirements of this Part.

1.2.2 Exemptions

The Society may, if it considers that the sheltered nature and conditions of the voyage are such as to render the application of any specific requirements of this chapter unreasonable or unnecessary, exempt* from those requirements individual ships or classes of ships entitled to fly the flag of its State, provided that such ships, which, in the course of their voyage, do not sail at distances of more than 20 miles from the nearest land.

* Refer to Port State concurrence with SOLAS exemptions (MSC/Circ.606, as may be amended).

1.3 Plans and Documents

1.3.1 Plans, together with supporting data and particulars, of fire detection and extinguishing arrangements of the ship are to be submitted for approval. They are to include at least as follows:

(a) A plan of fire extinguishing appliances showing the areas to be protected, means of access to each compartment and deck, ventilating systems, piping systems, fire extinguishing appliances, fire alarms and fire detection systems, control station for emergency closing of openings and stopping machinery and fireman's outfits.

(b) A list of fire extinguishing appliances indicating names of manufacturers, types, main particulars, and number of appliances.

(c) Plans of the fixed fire extinguishing installation for engine room and for cargo holds such as arrangements of fixed fire extinguishing installation, piping diagrams and details of main parts.

1.3.2 Calculation sheets for the capacity of fixed fire extinguishing installations are to be submitted for review.

1.3.3 Where considered necessary, plans and supporting data other than those specified in 1.3.1 and 1.3.2 above may be required to be submitted.

1.3.4 The drawings with regard to the construction and arrangements for fire protection and means of escape are to be submitted for approval.

1.4 Type Approval

1.4.1 Type approval

In principle, materials, equipment, systems or products used for fire protection, fire detection and fire extinction are to be type approved by the Society in accordance with the "Guidelines for Survey of Products for Marine Use" of the Society.

1.4.2 Materials containing asbestos

Use of materials which contain asbestos is prohibited.

1.5 Definitions

1.5.1 Accommodation spaces

Accommodation spaces are those spaces used for public spaces, corridors, lavatories, cabins, offices, hospitals, cinemas, game and hobby rooms, barber shops, pantries containing no cooking appliances and similar spaces.

1.5.2 "A" class divisions

"A" class divisions are those divisions formed by bulkheads and decks which comply with the following criteria.

(a) they are constructed of steel or other equivalent material;

(b) they are suitably stiffened;

(c) they are insulated with approved non-combustible materials such that the average temperature of the unexposed side will not rise more than 140°C above the original temperature, nor will the temperature, at any one point, including any joint, rise more than 180°C above the original temperature, within the time listed below:

class "A-60" 60 min

class "A-30" 30 min

class "A-15" 15 min

class "A-0" 0 min

(d) they are constructed as to be capable of preventing the passage of smoke and flame to the end of the one-hour standard fire test; and

(e) the Society has required a test of a prototype bulkhead or deck in accordance with the Fire Test Procedures Code (hereafter referred to as FTP Code) to ensure that it meets the requirements above for integrity and temperature rise.

1.5.3 Atriums

Atriums are public spaces within a single main vertical zone spanning three or more open decks.

1.5.4 "B" class divisions

"B" class divisions are those divisions formed by bulkheads, decks, ceilings or linings which comply with the following criteria:

(a) they are constructed of approved non-combustible materials and all materials used in the construction and erection of "B" class divisions are non-combustible, with the exception that combustible veneers may be permitted provided they meet other appropriate requirements of this chapter;

(b) they have an insulation value such that the average temperature of the unexposed side will not rise more than 140°C above the original temperature, nor will the temperature at any one point, including any joint, rise more than 225°C above the original temperature, within the time listed below:

class "B-15" 15 min

class "B-0" 0 min

(c) they are constructed as to be capable of preventing the passage of flame to the end of the first half hour of the standard fire test; and

(d) the Society has required a test of a prototype division in accordance with the FTP Code to ensure that it meets the above requirements for integrity and temperature rise.

1.5.5 Bulkhead deck

Bulkhead deck is the uppermost deck up to which the transverse watertight bulkheads are carried.

1.5.6 Cargo area

Cargo area is that part of the ship that contains cargo holds, cargo tanks, slop tanks and cargo pump-rooms including pump-rooms, cofferdams, ballast and void spaces adjacent to cargo tanks and also deck areas throughout the entire length and breadth of the part of the ship over the above-mentioned spaces.

1.5.7 Cargo ship

Cargo ship is any ship which is not a passenger ship.

1.5.8 Cargo spaces

Cargo spaces are spaces used for cargo, cargo oil tanks, tanks for other liquid cargo and trunks to such spaces.

1.5.9 Central control station

Central control station is a control station in which the following control and indicator functions are centralized:

(a) fixed fire detection and fire alarm systems;

(b) automatic sprinkler, fire detection and fire alarm systems;

(c) fire door indicator panels;

(d) fire door closure;

(e) watertight door indicator panels;

(f) watertight door closures;

(g) ventilation fans;

(h) general/fire alarms;

(i) communication systems including telephones; and

(j) microphones to public address systems.

1.5.10 "C" class divisions

"C" class divisions are divisions constructed of approved non-combustible materials. They need meet neither requirements relative to the passage of smoke and flame nor limitations relative to the temperature rise. Combustible veneers are permitted provided they meet the requirements of this Part.

1.5.11 Chemical tanker

Chemical tanker is a cargo ship constructed or adapted and used for the carriage in bulk of any liquid product of a flammable nature listed in Chapter 17 of the IBC Code.

1.5.12 Closed Ro-Ro spaces

Closed Ro-Ro spaces are Ro-Ro spaces which are neither open Ro-Ro spaces nor weather decks.

1.5.13 Closed vehicle spaces

Closed vehicle spaces are vehicle spaces which are neither open vehicle spaces nor weather decks.

1.5.14 Combination carrier

Combination carrier is a cargo ship designed to carry both oil and solid cargoes in bulk.

1.5.15 Combustible material

Combustible material is any material other than a non-combustible material.

1.5.16 Continuous "B" class ceilings or linings

Continuous "B" class ceilings or linings are those "B" class ceilings or linings which terminate at an "A" or "B" class division.

1.5.17 Continuously manned central control station

Continuously manned central control station is a central control station which is continuously manned by a responsible member of the crew.

1.5.18 Control stations

Control stations are those spaces in which the ship's radio or main navigating equipment or the emergency source of power is located or where the fire recording or fire control equipment is centralized. Spaces where the fire recording or fire control equipment is centralized are also considered to be a fire control station.

1.5.19 Crude oil

Crude oil is any oil occurring naturally in the earth whether or not treated to render it suitable for transportation and includes crude oil where certain distillate fractions may have been removed from or added to.

1.5.20 Dangerous goods

Dangerous goods are those goods referred to in the International Maritime Dangerous Goods Code (hereinafter referred to as the IMDG Code), as defined in regulation VII/1.1 of SOLAS.

1.5.21 Deadweight

Deadweight is the difference in tonnes between the displacement of a ship in water of a specific gravity of 1.025 at the load waterline corresponding to the assigned summer freeboard and the lightweight of the ship.

1.5.22 FSS Code

FSS Code means the International Code for Fire Safety Systems as adopted by the Maritime Safety Committee of the IMO.

1.5.23 FTP Code

FTP Code means the International Code for Application of Fire Test Procedures as adopted by the Maritime Safety Committee of the IMO.

1.5.24 Flashpoint

Flashpoint is the temperature in °C (closed cup test) at which a product will give off enough flammable vapour to be ignited, as determined by an approved flashpoint apparatus.

1.5.25 Gas carrier

Gas carrier is a cargo ship constructed or adapted and used for the carriage in bulk of any liquefied gas or other products of a flammable nature listed in chapter 19 of the IGC Code.

1.5.26 Helideck

Helideck is a purpose-built helicopter landing area located on a ship including all structure, fire-fighting appliances and other equipment necessary for the safe operation of helicopters.

1.5.27 Helicopter facility

Helicopter facility is a helideck including any refuelling and hangar facilities.

1.5.28 Lightweight

Lightweight is the displacement of a ship in tonnes without cargo, fuel, lubricating oil, ballast water, fresh water and feedwater in tanks, consumable stores, and passengers and crew and their effects.

1.5.29 Low flame spread

Low flame spread means that the surface thus described will adequately restrict the spread of flame, this being determined in accordance with the FTP Code.

1.5.30 Machinery spaces

Machinery spaces are machinery spaces of category A and other spaces containing propulsion machinery, boilers, oil fuel units, steam and internal combustion engines, generators and major electrical machinery, oil filling stations, refrigerating, stabilizing, ventilation and air conditioning machinery, and similar spaces, and trunks to such spaces.

1.5.31 Machinery spaces of category A

Machinery spaces of category A are those spaces and trunks to such spaces which contain either:

(a) internal combustion machinery used for main propulsion;

(b) internal combustion machinery used for purposes other than main propulsion where such machinery has in the aggregate a total power output of not less than 375 kW; or

(c) any oil-fired boiler or oil fuel unit, or any oil-fired equipment other than boilers, such as inert gas generators, incinerators, etc.

1.5.32 Main vertical zones

Main vertical zones are those sections into which the hull, superstructure and deckhouses are divided by "A" class divisions, the mean length and width of which on any deck does not in general exceed 40 m.

1.5.33 Non-combustible material

Non-combustible material is a material which neither burns nor gives off flammable vapours in sufficient quantity for self-ignition when heated to approximately 750°C, this being determined in accordance with the FTP Code.

1.5.34 Oil fuel unit

Oil fuel unit is the equipment used for the preparation of oil fuel for delivery to an oil-fired boiler, or equipment used for the preparation for delivery of heated oil to an internal combustion engine, and includes any oil pressure pumps, filters and heaters dealing with oil at a pressure of more than 0.18 MPa (N/mm^2).

1.5.35 Open Ro-Ro spaces

Open Ro-Ro spaces are those Ro-Ro spaces that are either open at both ends or have an opening at one end, and are provided with adequate natural ventilation effective over their entire length through permanent openings distributed in the side plating or deckhead or from above, having a total area of at least 10% of the total area of the space sides.

1.5.36 Open vehicle spaces

Open vehicle spaces are those vehicle spaces either open at both ends, or have an opening at one end and are provided with adequate natural ventilation effective over their entire length through permanent openings distributed in the side plating or deckhead or from above, having a total area of at least 10% of the total area of the space sides.

1.5.37 Passenger ship

Passenger ship is a ship which carries more than 12 passengers.

1.5.38 Prescriptive requirements

Prescriptive requirements means the construction characteristics, limiting dimensions, or fire safety systems specified in this Part.

1.5.39 Public spaces

Public spaces are those portions of the accommodation which are used for halls, dining rooms, lounges and similar permanently enclosed spaces.

1.5.40 Rooms containing furniture and furnishings of restricted fire risk

Rooms containing furniture and furnishings of restricted fire risk, for the purpose of Chapter 7, are those rooms containing furniture and furnishings of restricted fire risk (whether cabins, public spaces, offices or other types of accommodation) in which:

(a) case furniture such as desks, wardrobes, dressing tables, bureaux, dressers, are constructed entirely of approved non-combustible materials, except that a combustible veneer not exceeding 2 mm may be used on the working surface of such articles;

(b) free-standing furniture such as chairs, sofas, tables, are constructed with frames of non-combustible materials;

(c) draperies, curtains and other suspended textile materials have qualities of resistance to the propagation of flame not inferior to those of wool having a mass of mass 0.8 kg/m^2, this being determined in accordance with the FTP Code;

(d) floor coverings have low flame spread characteristics;

(e) exposed surfaces of bulkheads, linings and ceilings have low flame-spread characteristics;

(f) upholstered furniture has qualities of resistance to the ignition and propagation of flame, this being determined in accordance with the FTP Code; and

(g) bedding components have qualities of resistance to the ignition and propagation of flame, this being determined in accordance with the FTP Code.

1.5.41 Ro-Ro spaces

Ro-Ro spaces are spaces not normally subdivided in any way and normally extending to either a substantial length or the entire length of the ship in which motor vehicles with fuel in their tanks for their own propulsion and/or goods (packaged or in bulk, in or on rail or road cars, vehicles (including road or rail tankers), trailers, containers, pallets, demountable tanks or in or on similar stowage units or other receptacles) can be loaded and unloaded normally in a horizontal direction.

1.5.42 Ro-Ro passenger ship

Ro-Ro passenger ship means a passenger ship with Ro-Ro spaces or special category spaces.

1.5.43 Steel or other equivalent material

Steel or other equivalent material means any non-combustible material which, by itself or due to insulation provided, has structural and integrity properties equivalent to steel at the end of the applicable exposure to the standard fire test (e.g. aluminium alloy with appropriate insulation).

1.5.44 Sauna

Sauna is a hot room with temperatures normally varying between 80°C - 120°C where the heat is provided by a hot surface (e.g. by an electrically-heated oven). The hot room may also include the space where the oven is located and adjacent bathrooms.

1.5.45 Service spaces

Service spaces are those spaces used for galleys, pantries containing cooking appliances, lockers, mail and specie rooms, storerooms, workshops other than those forming part of the machinery spaces, and similar spaces and trunks to such spaces.

1.5.46 Special category spaces

Special category spaces are those enclosed vehicle spaces above and below the bulkhead deck, into and from which vehicles can be driven and to which passengers have access. Special category spaces may be accommodated on more than one deck provided that the total overall clear height for vehicles does not exceed 10 m.

1.5.47 Standard fire test

A standard fire test is a test in which specimens of the relevant bulkheads or decks are exposed in a test furnace to temperatures corresponding approximately to the standard time-temperature curve in accordance with the test method specified in the FTP Code.

1.5.48 Tanker

Tanker is a cargo ship constructed or adapted for the carriage in bulk of liquid cargoes of an inflammable nature.

1.5.49 Vehicle spaces

Vehicle spaces are cargo spaces intended for carriage of motor vehicles with fuel in their tanks for their own propulsion.

1.5.50 Weather deck

Weather deck is a deck which is completely exposed to the weather from above and from at least two sides.

1.5.51 Safe area in the context of a casualty

Safe area in the context of a casualty is, from the perspective of habitability, any area(s) which is not flooded or which is outside the main vertical zone(s) in which a fire has occurred such that it can safely accommodate all persons onboard to protect them from hazards to life or health and provide them with basic services.

1.5.52 Safety centre

Safety centre is a control station dedicated to the management of emergency situations. Safety systems' operation, control and/or monitoring are an integral part of the safety centre.

1.5.53 Cabin balcony

Cabin balcony is an open deck space which is provided for the exclusive use of the occupants of a single cabin and has direct access from such a cabin.

1.5.54 Fire damper

Fire damper is a device installed in a ventilation duct, which under normal conditions remains open allowing flow in the duct, and is closed during a fire, preventing the flow in the duct to restrict the passage of fire.

(a) Automatic fire damper is a fire damper that closes independently in response to exposure to fire products;

(b) Manual fire damper is a fire damper that is intended to be opened or closed by the crew by hand at the damper itself; and

(c) Remotely operated fire damper is a fire damper that is closed by the crew through a control located at a distance away from the controlled damper.

1.5.55 Smoke damper

Smoke damper is a device installed in a ventilation duct, which under normal conditions remains open allowing flow in the duct, and is closed during a fire, preventing the flow in the duct to restrict the passage of smoke and hot gases. A smoke damper is not expected to contribute to the integrity of a fire rated division penetrated by a ventilation duct.

(a) Automatic smoke damper is a smoke damper that closes independently in response to exposure to smoke or hot gases;

(b) Manual smoke damper is a smoke damper intended to be opened or closed by the crew by hand at the damper itself; and

(c) Remotely operated smoke damper is a smoke damper that is closed by the crew through a control located at a distance away from the controlled damper.

1.5.56 Vehicle carrier

Vehicle carrier means a cargo ship which only carries cargo in ro-ro spaces or vehicle spaces, and which is designed for the carriage of unoccupied motor vehicles without cargo, as cargo.

1.5.57 Helicopter landing area

Helicopter landing area is an area on a ship designated for occasional or emergency landing of helicopters but not designed for routine helicopter operations.

1.5.58 Winching area

Winching area is a pick-up area provided for the transfer by helicopter of personnel or stores to or from the ship, while the helicopter hovers above the deck.

1.6 Fire Safety Objectives and Functional Requirements

1.6.1 Fire safety objectives

The fire safety objectives of this Part are to:

(a) prevent the occurrence of fire and explosion;

(b) reduce the risk to life caused by fire;

(c) reduce the risk of damage caused by fire to the ship, its cargo and the environment;

(d) contain, control and suppress fire and explosion in the compartment of origin; and

(e) provide adequate and readily accessible means of escape for passengers and crew.

1.6.2 Functional requirements

In order to achieve the fire safety objectives set out in 1.6.1 above, the following functional requirements are embodied in the requirements of this Part as appropriate:

(a) division of the ship into main vertical and horizontal zones by thermal and structural boundaries;

(b) separation of accommodation spaces from the remainder of the ship by thermal and structural boundaries;

(c) restricted use of combustible materials;

(d) detection of any fire in the zone of origin;

(e) containment and extinction of any fire in the space of origin;

(f) protection of means of escape and access for fire-fighting;

(g) ready availability of fire-extinguishing appliances; and

(h) minimization of possibility of ignition of flammable cargo vapour.

1.6.3 Achievement of the fire safety objectives

The fire safety objectives set out in 1.6.1 above are to be achieved by ensuring compliance with the prescriptive requirements specified in Chapter 2~13 (except Chapter 12) of this Part, or by alternative design and arrangements which comply with Chapter 12. A ship shall be considered to meet the functional requirements set out in 1.6.2 and to achieve the fire safety objectives set out in 1.6.1 above when either:

(a) the ship's designs and arrangements, as a whole, complies with the relevant prescriptive requirements in Chapter 2~13 (except Chapter 12) of this Part;

(b) the ship's designs and arrangements, as a whole, have been reviewed and approved in accordance with Chapter 12 of this Part; or

(c) part(s) of the ship's designs and arrangements have been reviewed and approved in accordance with Chapter 12 of this Part and the remaining parts of the ship comply with the relevant prescriptive requirements in Chapter 2~13 (except Chapter 12) of this Part.

Chapter 2

Probability of Ignition

For Chapter 2 to Chapter 4, Guidelines for measures to prevent fires in engine-rooms and cargo pump-rooms(MSC.1/Circ.1321, as may be amended) are to be referred.

2.1 Arrangements for Oil Fuel, Lubrication Oil and Other Flammable Oils

2.1.1 Limitations in the use of oils as fuel

The following limitations are to apply to the use of oil as fuel:

(a) Except as otherwise permitted by this paragraph, no oil fuel with a flashpoint of less than 60°C is to be used;*

* Refer to the Recommended procedures to prevent the illegal or accidental use of low flashpoint cargo oil as fuel adopted by the IMO by resolution A.565(14), as may be amended.

(b) In emergency generators oil fuel with a flashpoint of not less than 43°C may be used;

(c) The use of oil fuel having a flashpoint of less than 60°C but not less than 43°C may be permitted (e.g., for feeding the emergency fire pump's engines and the auxiliary machines which are not located in the machinery spaces of category A) subject to the following:

(i) fuel oil tanks except those arranged in double bottom compartments are to be located outside of machinery spaces of category A;

(ii) provisions for the measurement of oil temperature are provided on the suction pipe of the oil fuel pump;

(iii) stop valves and/or cocks are provided on the inlet side and outlet side of the oil fuel strainers; and

(iv) pipe joints of welded construction or of circular cone type or spherical type union joint are applied as much as possible;

(d) in cargo ships, to which part G of chapter II-1 of SOLAS is not applicable, the use of oil fuel having a lower flashpoint than otherwise specified in 2.1.1(a), for example crude oil, may be permitted provided that such fuel is not stored in any machinery space and subject to the approval by the Society of the complete installation; and

(e) in ships, to which part G of chapter II-1 of SOLAS is applicable, the use of oil fuel having a lower flashpoint than otherwise specified in 2.1.1(a) is permitted.

2.1.2 Arrangements for oil fuel

In a ship in which oil fuel is used, the arrangements for the storage, distribution and utilization of the oil fuel are to be such as to ensure the safety of the ship and persons on board and are to at least comply with the following provisions.

(a) Location of oil fuel systems

As far as practicable, parts of the oil fuel system containing heated oil under pressure exceeding 0.18 N/mm^2 are not to be placed in a concealed position such that defects and leakage cannot readily be observed. The machinery spaces in way of such parts of the oil fuel system are to be adequately illuminated.

(b) Ventilation of machinery spaces

The ventilation of machinery spaces is to be sufficient under normal conditions to prevent accumulation of oil vapor.

(c) Oil fuel tanks

(i) Fuel oil, lubrication oil and other flammable oils are not to be carried in forepeak tanks.

(ii) As far as practicable, oil fuel tanks are to be part of the ships structure and are to be located outside machinery spaces of category A. Where oil fuel tanks, other than double bottom tanks, are necessarily

located adjacent to or within machinery spaces of category A, at least one of their vertical sides is to be contiguous to the machinery space boundaries, and is to be preferably have a common boundary with the double bottom tanks, and the area of the tank boundary common with the machinery spaces is to be kept to a minimum*. Where such tanks are situated within the boundaries of machinery spaces of category A they are not to contain oil fuel having a flashpoint of less than 60°C. In general, the use of free-standing oil fuel tanks is to be avoided. When such tanks are employed their use is to be prohibited in category A machinery spaces on passenger ships. Where permitted, they are to be placed in an oil-tight spill tray of ample size having a suitable drain pipe leading to a suitably sized spill oil tank.

* Refer to Unified interpretations of SOLAS chapter II-2 (MSC.1/Circ.1322, as may be amended)

(iii) No oil fuel tank is to be situated where spillage or leakage there from can constitute a fire or explosion hazard by falling on heated surfaces.

(iv) Oil fuel pipes, which, if damaged, would allow oil to escape from a storage, settling or daily service tank having a capacity of 500 litters and above situated above the double bottom, are to be fitted with a cock or valve directly on the tank capable of being closed from a safe position outside the space concerned in the event of a fire occurring in the space in which such tanks are situated. In the special case of deep tanks situated in any shaft or pipe tunnel or similar space, valves on the tank are to be fitted, but control in the event of fire may be effected by means of an additional valve on the pipe or pipes outside the tunnel or similar space. If such an additional valve is fitted in the machinery space it is to be operated from a position outside this space. The controls for remote operation of the valve for the emergency generator fuel tank are to be in a separate location from the controls for remote operation of other valves for tanks located in machinery spaces.

(v) Safe and efficient means of ascertaining the amount of oil fuel contained in any oil fuel tank are to be provided.

(1) Where sounding pipes are used, they are not to terminate in any space where the risk of ignition of spillage from the sounding pipe might arise. In particular, they are not to terminate in passenger or crew spaces. As a general rule, they are not to terminate in machinery spaces. However, where the Society considers that these latter requirements are impracticable, it may permit termination of sounding pipes in machinery spaces on condition that all of the following requirements are met:

a) an oil-level gauge is provided meeting the requirements of 2.1.2(c)(v)(2) of this Part;

b) the sounding pipes terminate in locations remote from ignition hazards unless precautions are taken, such as the fitting of effective screens, to prevent the oil fuel in the case of spillage through the terminations of the sounding pipes from coming into contact with a source of ignition; and

c) the termination of sounding pipes are fitted with self-closing blanking devices and with a small-diameter self-closing control cock located below the blanking device for the purpose of ascertaining before the blanking device is opened that oil fuel is not present. Provisions are to be made so as to ensure that any spillage of oil fuel through the control cock involves no ignition hazard.

(2) Other oil-level gauges may be used in place of sounding pipes subject to the following conditions:

a) in passenger ships, such gauges are not to require penetration below the top of the tank and their failure or overfilling of the tanks are not to permit release of fuel; and

b) in cargo ships, the failure of such gauges or overfilling of the tank are not to permit release of fuel into the space. The use of cylindrical gauge glasses is prohibited. The Society may permit the use of oil-level gauges with flat glasses and self-closing valves between the gauges and fuel tanks.

(3) The means prescribed above which are acceptable are to be maintained in the proper condition to ensure their continued accurate functioning in service.

(d) Prevention of overpressure

Provisions are to be made to prevent overpressure in any oil tank or in any part of the oil fuel system, including the filling pipes served by pumps on board. Air and overflow pipes and relief valves are to discharge to a position where there is no risk of fire or explosion from the emergence of oils and vapour and

are not to lead into crew spaces, passenger spaces nor into special category spaces, closed Ro-Ro cargo spaces, machinery spaces or similar spaces.

(e) Oil fuel piping

(i) Oil fuel pipes and their valves and fittings are to be of steel or other approved material, except that restricted use of flexible pipes is to be permissible in positions where the Society is satisfied that they are necessary.* Such flexible pipes and end attachments are to be of approved fire-resisting materials of adequate strength and are to be constructed to the satisfaction of the Society. For valves, fitted to oil fuel tanks and which are under static pressure, steel or spheroidal-graphite cast iron may be accepted. However, ordinary cast iron valves may be used in piping systems where the design pressure is lower than 7 bar and the design temperature is below 60°C.

* Refer to recommendations published by the International Organization for Standardization, in particular, Publications ISO 15540:1999 on Test methods for fire resistance of hose assemblies and ISO 15541:1999 on Requirements for the test bench of fire resistance of hose assemblies.

(ii) External high-pressure fuel delivery lines between the high-pressure fuel pumps and fuel injectors are to be protected with a jacketed piping system capable of containing fuel from a high-pressure line failure. A jacketed pipe incorporates an outer pipe into which the high-pressure fuel pipe is placed, forming a permanent assembly. The jacketed piping system is to include a means for collection of leakages and arrangements and is to be provided with an alarm in case of a fuel line failure.

(iii) Oil fuel lines are not to be located immediately above or near units of high temperature including boilers, steam pipelines, exhaust manifolds, silencers or other equipment required to be insulated by 2.1.2(f) of this Part. As far as practicable, oil fuel lines are to be arranged far apart from hot surfaces, electrical installations or other sources of ignition and are to be screened or otherwise suitably protected to avoid oil spray or oil leakage onto the sources of ignition. The number of joints in such piping systems is to be kept to a minimum.

(iv) Components of a diesel engine fuel system are to be designed considering the maximum peak pressure which will be experienced in service, including any high pressure pulses which are generated and transmitted back into the fuel supply and spill lines by the action of fuel injection pumps. Connections within the fuel supply and spill lines are to be constructed having regard to their ability to prevent pressurized oil fuel leaks while in service and after maintenance.

(v) In multi-engine installations which are supplied from the same fuel source, means of isolating the fuel supply and spill piping to individual engines, are to be provided. The means of isolation are not to affect the operation of the other engines and are to be operable from a position not rendered inaccessible by a fire on any of the engines.

(vi) Where the Society may permit the conveying of oil and combustible liquids through accommodation and service spaces, the pipes conveying oil or combustible liquids are to be of a material approved by the Society having regard to the fire risk.

(f) Protection of high temperature surfaces

(i) Surfaces with temperatures above 220°C which may be impinged as a result of a fuel system failure are to be properly insulated.

(ii) Precautions are to be taken to prevent any oil that may escape under pressure from any pump, filter or heater from coming into contact with heated surfaces.

2.1.3 Arrangements for lubricating oil

(a) The arrangements for the storage, distribution and utilization of oil used in pressure lubrication systems are to be such as to ensure the safety of the ship and persons on board. The arrangements made in machinery spaces of category A, and whenever practicable in other machinery spaces, are to at least comply with the provisions of 2.1.2(a), 2.1.2(c)(iii), 2.1.2(c)(iv), 2.1.2(c)(v), 2.1.2(d), 2.1.2(e)(i), 2.1.2(e)(iii), and 2.1.2(f) of this Part except that:

(i) this does not preclude the use of sight-flow glasses in lubricating systems provided that they are shown by testing to have a suitable degree of fire resistance; and

(ii) sounding pipes may be authorized in machinery spaces; however, the requirements of 2.1.2(c)(v)(1)a) and 2.1.2(c)(v)(1)c) of this Part need not be applied on condition that the sounding pipes are fitted with appropriate means of closure.

(b) The provisions of 2.1.2(c)(iv) of this Part are to also apply to lubricating oil tanks except those having a capacity less than 500 litters, storage tanks on which valves are closed during the normal operation mode of the ship, or where it is determined that an unintended operation of a quick closing valve on the oil lubricating tank would endanger the safe operation of the main propulsion and essential auxiliary machinery.

2.1.4 Arrangements for other flammable oils

The arrangements for the storage, distribution and utilization of other flammable oils employed under pressure in power transmission systems, control and activating systems and heating systems are to be such as to ensure the safety of the ship and persons on board. Suitable oil collecting arrangements for leaks are to be fitted below hydraulic valves and cylinders. In locations where means of ignition are present, such arrangements are to at least comply with the provisions of 2.1.2(c)(iii), 2.1.2(c)(v), 2.1.2(e)(iii) and 2.1.2(f) of this Part and with the provisions of 2.1.2(d) and 2.1.2(e)(1) of this Part in respect of strength and construction.

2.1.5 Arrangements for oil fuel in periodically unattended machinery spaces

In addition to the requirements of 2.1.1 to 2.1.4 of this Part, the oil fuel and lubricating oil systems in a periodically unattended machinery space are to comply with the following:

(a) where daily service oil fuel tanks are filled automatically, or by remote control, means are to be provided to prevent overflow spillages. Other equipment which treats flammable liquids automatically (e.g. oil fuel purifiers) which, whenever practicable, is to be installed in a special space reserved for purifiers and their heaters, are to have arrangements to prevent overflow spillages; and

(b) where daily service oil fuel tanks or settling tanks are fitted with heating arrangements, a high temperature alarm is to be provided if the flashpoint of the oil fuel can be exceeded.

2.2 Arrangements for Gaseous Fuel for Domestic Purpose

Gaseous fuel systems used for domestic purposes are to be approved by the Society. Storage of gas bottles is to be located on the open deck or in a well ventilated space which opens only to the open deck.

2.3 Miscellaneous Items of Ignition Sources and Ignitability

2.3.1 Electric radiators

Electric radiators, if used, are to be fixed in position and so constructed as to reduce fire risks to a minimum. No such radiators are to be fitted with an element so exposed that clothing, curtains, or other similar materials can be scorched or set on fire by heat from the element.

2.3.2 Waste receptacles

Waste receptacles are to be constructed of non-combustible materials with no openings in the sides or bottom.

2.3.3 Insulation surfaces protected against oil penetration

In spaces where penetration of oil products is possible, the surface of insulation is to be impervious to oil or oil vapours.

2.3.4 Primary deck coverings

Primary deck coverings, if applied within accommodation and service spaces and control stations or if applied on cabin balconies of passenger ships are to be of approved material which will not readily ignite, this being determined in accordance with the FTP Code.

2.4 Cargo Areas of Tankers

2.4.1 Separation of cargo oil tanks

(a) Cargo pump-rooms, cargo tanks, slop tanks and cofferdams are to be positioned forward of machinery spaces. However, oil fuel bunker tanks need not be forward of machinery spaces. Cargo tanks and slop tanks are to be isolated from machinery spaces by cofferdams, cargo pump-rooms, oil bunker tanks or ballast tanks. Pump-rooms containing pumps and their accessories for ballasting those spaces situated adjacent to cargo tanks and slop tanks and pumps for oil fuel transfer, are to be considered as equivalent to a cargo pump-room within the context of this chapter provided that such pump-rooms have the same safety standard as that required for cargo pump-rooms. Pump-rooms intended solely for ballast or oil fuel transfer, however, need not comply with the requirements of 8.8 of this Part. The lower portion of the pumproom may be recessed into machinery spaces of category A to accommodate pumps, provided that the deck head of the recess is in general not more than one third of the moulded depth above the keel, except that in the case of ships of not more than 25,000 tonnes deadweight, where it can be demonstrated that for reasons of access and satisfactory piping arrangements this is impracticable, the Society may permit a recess in excess of such height, but not exceeding one half of the moulded depth above the keel.

(b) Main cargo control stations, control stations, accommodation and service spaces (excluding isolated cargo handling gear lockers) are to be positioned aft of cargo tanks, slop tanks, and spaces which isolate cargo or slop tanks from machinery spaces, but not necessarily aft of the oil fuel bunker tanks and ballast tanks, and are to be arranged in such a way that a single failure of a deck or bulkhead are not to permit the entry of gas or fumes from the cargo tanks into an accommodation space, main cargo control stations, control station, or service spaces. A recess provided in accordance with 2.4.1(a) of this Part need not be taken into account when the position of these spaces is being determined.

(c) However, where deemed necessary, the Society may permit main cargo control stations, control stations, accommodation and service spaces forward of the cargo tanks, slop tanks and spaces which isolate cargo and slop tanks from machinery spaces, but not necessarily forward of oil fuel bunker tanks or ballast tanks. Machinery spaces, other than those of category A, may be permitted forward of the cargo tanks and slop tanks provided they are isolated from the cargo tanks and slop tanks by cofferdams, cargo pump-rooms, oil fuel bunker tanks or ballast tanks, and have at least one portable fire extinguisher. In cases where they contain internal combustion machinery, one approved foam-type extinguisher of at least 45 litters capacity or equivalent are to be arranged in addition to portable fire extinguishers. If operation of a semi-portable fire extinguisher is impracticable, this fire extinguisher may be replaced by two additional portable fire extinguishers. Accommodation spaces, main cargo control spaces, control stations and service spaces are to be arranged in such a way that a single failure of a deck or bulkhead are not to permit the entry of gas or fumes from the cargo tanks into such spaces. In addition, where deemed necessary for the safety or navigation of the ship, the Society may permit machinery spaces containing internal combustion machinery not being main propulsion machinery having an output greater than 375 kW to be located forward of the cargo area provided the arrangements are in accordance with the provisions of this paragraph.

(d) In combination carriers only:

(i) The slop tanks are to be surrounded by cofferdams except where the boundaries of the slop tanks, where slop may be carried on dry cargo voyages, are part of the hull, main cargo deck, cargo pump-room bulkhead or oil fuel bunker tank. These cofferdams are not to be open to a double bottom, pipe tunnel, pump-room or other enclosed space, nor to be used for cargo or ballast and are not to be connected to piping systems serving oil cargo or ballast. Means are to be provided for filling the cofferdams with water and for draining them. Where the boundary of a slop tank is part of the cargo pump-room bulkhead, the pump-room are not to be open to the double bottom, pipe tunnel or other enclosed space; however, openings provided with gastight bolted covers may be permitted;

(ii) Means are to be provided for isolating the piping connecting the pump-room with the slop tanks referred to in 2.4.1(d)(i) of this Part. The means of isolation are to consist of a valve followed by a spectacle flange or a spool piece with appropriate blank flanges. This arrangement is to be located adjacent to the slop tanks, but where this is unreasonable or impracticable, it may be located within the pump-room directly after the piping penetrates the bulkhead. A separate permanently installed pumping and piping arrangement incorporating a manifold, provided with a shut-off valve and a blank flange, is to be provided for discharging the contents of the slop tanks directly to the open deck for disposal to shore reception facilities when the ship is in the dry cargo mode. When the transfer system is used for slop transfer in the dry cargo mode, it is to have no connection to other systems. Separation from other systems by means of removal of spool pieces may be accepted;

(iii) Hatches and tank cleaning openings to slop tanks are to only be permitted on the open deck and are to be fitted with closing arrangements. Except where they consist of bolted plates with bolts at watertight spacing, these closing arrangements are to be provided with locking arrangements under the control of the responsible ship's officer; and

(iv) Where cargo wing tanks are provided, cargo oil lines below deck are to be installed inside these tanks. However, the Society may permit cargo oil lines to be placed in special ducts provided there are capable of being adequately cleaned and ventilated to the satisfaction of the Society. Where cargo wing tanks are not provided, cargo oil lines below deck are to be placed in special ducts.

(e) Where the fitting of a navigation position above the cargo area is shown to be necessary, it is to be for navigation purposes only and it is to be separated from the cargo tank deck by means of an open space with a height of at least 2 m. The fire protection requirements for such a navigation position are to be that required for control stations, as specified in 7.1.4(b) of this Part and other provisions for tankers, as applicable.

(f) Means are to be provided to keep deck spills away from the accommodation and service areas. This may be accomplished by provision of a permanent continuous coaming of a height of at least 300 mm, extending from side to side. Special consideration is to be given to the arrangements associated with stern loading.

2.4.2 Restriction on boundary openings

(a) Except as permitted in 2.4.2(b) of this Part, access doors, air inlets and openings to accommodation spaces, service spaces, control stations and machinery spaces are not to face the cargo area. They are to be located on the transverse bulkhead not facing the cargo area or on the outboard side of the superstructure or deckhouse at a distance of at least 4% of the length of the ship but not less than 3 m from the end of the superstructure or deckhouse facing the cargo area. This distance need not exceed 5 m.

(b) The Society may permit access doors in boundary bulkheads facing the cargo area or within the 5 m limits specified in 2.4.2(a) of this Part, to main cargo control stations and to such service spaces used as provision rooms, store-rooms and lockers, provided they do not give access directly or indirectly to any other space containing or providing for accommodation, control stations or service spaces such as galleys, pantries or workshops, or similar spaces containing sources of vapour ignition. The boundary of such a space is to be insulated to "A-60" class standard, with the exception of the boundary facing the cargo area. Bolted plates for the removal of machinery may be fitted within the limits specified in 2.4.2(a) of this Part. Wheelhouse doors and windows may be located within the limits specified in 2.4.2(a) of this Part so long as they are designed to ensure that the wheelhouse can be made rapidly and efficiently gas and vapour tight.

(c) Windows and sidescuttles facing the cargo area and on the sides of the superstructures and deckhouses within the limits specified in 2.4.2(a) of this Part are to be of the fixed (non-opening) type. Such windows and sidescuttles, except wheelhouse windows, are to be constructed to "A-60" class standard except that "A-0" class standard is acceptable for windows and sidescuttles outside the limit specified in 7.1.4(b)(v) of this Part.

(d) Where there is permanent access from a pipe tunnel to the main pump-room, a watertight door is to be fitted complying with the requirements of 14.3 of Part II of the Rules and, in addition, with the following:

(i) in addition to the bridge operation, the watertight door is to be capable of being manually closed from outside the main pump-room entrance; and

(ii) the watertight door is to be kept closed during normal operations of the ship except when access to the pipe tunnel is required.

(e) Permanent approved gastight lighting enclosures for illuminating cargo pump-rooms may be permitted in bulkheads and decks separating cargo pump-rooms and other spaces provided they are of adequate strength and the integrity and gastightness of the bulkhead or deck is maintained.

(f) The arrangement of ventilation inlets and outlets and other deckhouse and superstructure boundary space openings is to be such as to complement the provisions of 2.4.3 and 9.5 of this Part. Such vents, especially for machinery spaces, are to be situated as far aft as practicable. Due consideration in this regard is to be given when the ship is equipped to load or discharge at the stern. Sources of ignition such as electrical equipment are to be so arranged as to avoid an explosion hazard.

2.4.3 Cargo tank venting

(a) General requirements

The venting systems of cargo tanks are to be entirely distinct from the air pipes of the other compartments of the ship. The arrangements and position of openings in the cargo tank deck from which emission of flammable vapours can occur are to be such as to minimize the possibility of flammable vapours being admitted to enclosed spaces containing a source of ignition, or collecting in the vicinity of deck machinery and equipment which may constitute an ignition hazard. In accordance with this general principle, the criteria in 2.4.3(b) to 2.4.3(e) and 9.5 of this Part will apply.

(b) Venting arrangements

(i) The venting arrangements in each cargo tank may be independent or combined with other cargo tanks and may be incorporated into the inert gas piping.

(ii) Where the arrangements are combined with other cargo tanks, either stop valves or other acceptable means are to be provided to isolate each cargo tank. Where stop valves are fitted, they are to be provided with locking arrangements which are to be under the control of the responsible ship's officer. There are to be a clear visual indication of the operational status of the valves or other acceptable means. Where tanks have been isolated, it is to be ensured that relevant isolating valves are opened before cargo loading or ballasting or discharging of those tanks is commenced. Any isolation must continue to permit the flow caused by thermal variations in a cargo tank in accordance with 9.5.1(a) of this Part. For tankers, any isolation is also to continue to permit the passage of large volumes of vapour, air or inert gas mixtures during cargo loading and ballasting, or during discharging in accordance with 9.5.1(b) of this Part.

(iii) If cargo loading and ballasting or discharging of a cargo tank or cargo tank group is intended, which is isolated from a common venting system, that cargo tank or cargo tank group is to be fitted with a means for over-pressure or under-pressure protection as required in 9.5.3(b) of this Part.

(iv) The venting arrangements are to be connected to the top of each cargo tank and are to be self-draining to the cargo tanks under all normal conditions of trim and list of the ship. Where it may not be possible to provide self-draining lines, permanent arrangements are to be provided to drain the vent lines to a cargo tank.

(c) Safety devices in venting systems

The venting system is to be provided with devices to prevent the passage of flame into the cargo tanks. The design, testing and locating of these devices are to comply with the requirements established by the Society on the basis of the guidelines* developed by the IMO. Ullage openings are not to be used for pressure equalization. They are to be provided with self-closing and tightly sealing covers. Flame arresters and screens are not permitted in these openings.

* Refer to the Revised standards for the design, testing and locating of devices to prevent the passage of flame into cargo tanks in tankers(MSC/Circ.677), as amended by MSC/Circ.1009, as may be amended, and to the Revised factors to be taken into consideration when designing cargo tank venting and gas-freeing arrangements (MSC/Circ.731, as may be amended).

(d) Vent outlets for cargo handling and ballasting

(i) Vent outlets for cargo loading, discharging and ballasting required by 9.5.1(b) of this Part are to:

(1) permit the free flow of vapour mixtures; or permit the throttling of the discharge of the vapour mixtures to achieve a velocity of not less than 30 m/s.

(2) be so arranged that the vapour mixture is discharged vertically upwards;

(3) where the method is by free flow of vapour mixtures, be such that the outlet is to be not less than 6 m above the cargo tank deck or fore and aft gangway if situated within 4 m of the gangway

and located not less than 10 m measured horizontally from the nearest air intakes and openings to enclosed spaces containing a source of ignition and from deck machinery, which may include anchor windlass and chain locker openings, and equipment which may constitute an ignition hazard; and

(4) where the method is by high-velocity discharge, be located at a height not less than 2 m above the cargo tank deck and not less than 10 m measured horizontally from the nearest air intakes and openings to enclosed spaces containing a source of ignition and from deck machinery, which may include anchor windlass and chain locker openings, and equipment which may constitute an ignition hazard. These outlets are to be provided with high velocity devices of an approved type.

(ii) The arrangements for the venting of vapours displaced from the cargo tanks during loading and ballasting are to comply with 2.4.3 and 9.5 of this Part and are to consist of either one or more mast risers, or a number of high-velocity vents. The inert gas supply main may be used for such venting.

(e) Isolation of slop tanks in combination carriers

In combination carriers, the arrangements for isolating slop tanks containing oil or oil residues from other cargo tanks are to consist of blank flanges which will remain in position at all times when cargoes other than liquid cargoes referred to in 1.1.4(a) of this Part are carried.

2.4.4 Ventilation

(a) Ventilation systems in cargo pump rooms

Cargo pump-rooms are to be mechanically ventilated and discharges from the exhaust fans are to be led to a safe place on the open deck. The ventilation of these rooms is to have sufficient capacity to minimize the possibility of accumulation of flammable vapours. The number of air changes is to be at least 20 per hour, based upon the gross volume of the space. The air ducts are to be arranged so that all of the space is effectively ventilated. The ventilation is to be of the suction type using fans of the non-sparking type.

(b) Ventilation systems in combination carriers

In combination carriers, cargo spaces and any enclosed spaces adjacent to cargo spaces are to be capable of being mechanically ventilated. The mechanical ventilation may be provided by portable fans. An approved fixed gas warning system capable of monitoring flammable vapours is to be provided in cargo pump-rooms, pipe ducts and cofferdams, as referred to in paragraph 2.4.1(d) of this Part, adjacent to slop tanks. Suitable arrangements are to be made to facilitate measurement of flammable vapours in all other spaces within the cargo area. Such measurements are to be made possible from the open deck or easily accessible positions.

2.4.5 Inert gas systems

(a) Application

(i) For tankers of 8,000 tonnes deadweight and upwards when carrying cargoes described in 1.1.4(a) or 1.1.4(b) of this Part, the protection of the cargo tanks is to be achieved by a fixed inert gas system in accordance with the requirements of the FSS Code, except that the Administration may accept other equivalent systems or arrangements, as described in 2.4.5(d).

(ii) Tankers operating with a cargo tank cleaning procedure using crude oil washing are to be fitted with an inert gas system complying with the FSS Code and with fixed tank washing machines.

(iii) Tankers required to be fitted with inert gas systems are to comply with the following provisions:

(1) double-hull spaces are to be fitted with suitable connections for the supply of inert gas;

(2) where hull spaces are connected to a permanently fitted inert gas distribution system, means are to be provided to prevent hydrocarbon gases from the cargo tanks entering the double hull spaces through the system; and

(3) where such spaces are not permanently connected to an inert gas distribution system, appropriate means are to be provided to allow connection to the inert gas main.

(b) Inert gas systems of chemical tankers and gas carriers

(i) The requirements for inert gas systems contained in the FSS Code need not be applied to all gas carriers:

(1) when carrying cargoes described in 1.1.4(a) of this Part, provided that they comply with the requirements for inert gas systems on chemical tankers established by the Society, based on the guidelines developed by the IMO*; or
* Refer to the Regulation for inert gas systems on chemical tankers, adopted by the IMO by resolution A.567(14), and Corr.1, as may be amended.

(2) when carrying flammable cargoes other than crude oil or petroleum products such as cargoes listed in Chapters 17 and 18 of the IBC Code, provided that the capacity of tanks used for their carriage does not exceed 3,000 m^3 and the individual nozzle capacities of tank washing machines do not exceed 17.5 m^3/h and the total combined throughput from the number of machines in use in a cargo tank at any one time does not exceed 110 m^3/h.

(c) General requirements for inert gas systems

(i) The inert gas system is to be capable of inerting, purging and gas-freeing empty tanks and maintaining the atmosphere in cargo tanks with the required oxygen content.

(ii) Tankers fitted with a fixed inert gas system are to be provided with a closed ullage system.

(d) Requirements for equivalent systems

(i) The Society may, after having given consideration to the ship's arrangement and equipment, accept other fixed installations, in accordance with 1.2 and 2.4.5(d)(iii) of this Part.

(ii) For tankers of 8,000 tonnes deadweight and upwards but less than 20,000 tonnes deadweight, in lieu of fixed installations as required by paragraph 2.4.5(d)(i) of this Part, the Society may accept other equivalent arrangements or means of protection in accordance with 1.2 and 2.4.5(d)(i) of this Part.

(iii) Equivalent systems or arrangements are to:

(1) be capable of preventing dangerous accumulations of explosive mixtures in intact cargo tanks during normal service throughout the ballast voyage and necessary in-tank operations; and

(2) be so designed as to minimize the risk of ignition from the generation of static electricity by the system itself.

2.4.6 Inerting, purging and gas freeing

(a) Arrangements for purging and/or gas freeing are to be such as to minimize the hazards due to dispersal of flammable vapours in the atmosphere and to flammable mixtures in a cargo tank.

(b) The procedure for cargo tank purging and/or gas freeing is to be carried out in accordance with 11.3.2(b) of this Part.

(c) The arrangements for inerting, purging or gas-freeing of empty tanks as required in paragraph 2.4.5(c)(i) of this Part are to be to the satisfaction of the Society and are to be such that the accumulation of hydrocarbon vapours in pockets formed by the internal structural members in a tank is minimized and that:

(i) on individual cargo tanks, the gas outlet pipe, if fitted, is to be positioned as far as practicable from the inert gas/air inlet and in accordance with 2.4.5(c) and 9.5 of this Part. The inlet of such outlet pipes may be located either at deck level or at not more than 1 m above the bottom of the tank;

(ii) the cross-sectional area of such gas outlet pipe referred to in 2.4.6(c)(i) of this Part is to be such that an exit velocity of at least 20 m/s can be maintained when any three tanks are being simultaneously supplied with inert gas. Their outlets are to extend not less than 2 m above deck level; and

(iii) each gas outlet referred to in 2.4.6(c)(ii) of this Part are to be fitted with suitable blanking arrangements.

2.4.7 Gas measurement and detection

(a) Portable instrument

Tankers are to be equipped with at least one portable instrument for measuring oxygen and one for measuring flammable vapour concentrations, together with a sufficient set of spares. Suitable means are to be provided for the calibration of such instruments.

(b) Arrangements for gas measurement in double-hull spaces and double-bottom spaces

(i) Suitable portable instruments for measuring oxygen and flammable vapour concentrations in double-hull spaces and double-bottom spaces are to be provided. In selecting these instruments, due attention are to be given to their use in combination with the fixed gas sampling line systems referred to in 2.4.7(b)(ii) of this Part.

(ii) Where the atmosphere in double-hull spaces cannot be reliably measured using flexible gas sampling hoses, such spaces are to be fitted with permanent gas sampling lines. The configuration of gas sampling lines are to be adapted to the design of such spaces.

(iii) The materials of construction and dimensions of gas sampling lines are to be such as to prevent restriction. Where plastic materials are used, they are to be electrically conductive.

(c) Arrangements for fixed hydrocarbon gas detection systems in double-hull and double-bottom spaces of oil tankers

(i) In addition to the requirements in 2.4.7(a) and 2.4.7(b) of this Part, oil tankers of 20,000 tonnes deadweight and above are to be provided with a fixed hydrocarbon gas detection system complying with the FSS Code for measuring hydrocarbon gas concentrations in all ballast tanks and void spaces of double-hull and double-bottom spaces adjacent to the cargo tanks, including the forepeak tank and any other tanks and spaces under the bulkhead deck adjacent to cargo tanks.

(ii) Oil tankers provided with constant operative inerting systems for such spaces need not be equipped with fixed hydrocarbon gas detection equipment.

(iii) Notwithstanding the above, cargo pump-rooms subject to the provisions of 2.4.10 of this Part need not comply with the requirements of this paragraph.

2.4.8 Air supply to double hull and double bottom spaces

Double hull and double bottom spaces are to be fitted with suitable connections for the supply of air.

2.4.9 Protection of cargo area

Drip pans for collecting cargo residues in cargo lines and hoses are to be provided in the area of pipe and hose connections under the manifold area. Cargo hoses and tank washing hoses are to have electrical continuity over their entire lengths including couplings and flanges (except shore connections) and are to be earthed for removal of electrostatic charges.

2.4.10 Protection of cargo pump-rooms

(a) In tankers:

(i) cargo pumps, ballast pumps and stripping pumps, installed in cargo pump-rooms and driven by shafts passing through pump-room bulkheads are to be fitted with temperature sensing devices for bulkhead shaft glands, bearings and pump casings. A continuous audible and visual alarm signal are to be automatically effected in the cargo control room or the pump control station;

(ii) lighting in cargo pump-rooms, except emergency lighting, are to be interlocked with ventilation such that the ventilation are to be in operation when switching on the lighting. Failure of the ventilation system are not to cause the lighting to go out;

(iii) a system for continuous monitoring of the concentration of hydrocarbon gases are to be fitted. Sampling points or detector heads are to be located in suitable positions in order that potentially dangerous leakages are readily detected. When the hydrocarbon gas concentration reaches a pre-set level which are not to be higher than 10% of the lower flammable limit, a continuous audible and visual alarm signal are to be automatically effected in the pump-room, engine control room, cargo control room and navigation bridge to alert personnel to the potential hazard; and

(iv) all pump-rooms are to be provided with bilge level monitoring devices together with appropriately located alarms.

Chapter 3

Fire Growth Potential

For Chapter 2 to Chapter 4, Guidelines for measures to prevent fires in engine-rooms and cargo pump-rooms (MSC.1/Circ.1321, as may be amended) are to be referred.

3.1 Control of Air Supply and Flammable Liquid to the Space

3.1.1 Closing appliances and stopping devices of ventilation

(a) The main inlets and outlets of all ventilation systems are to be capable of being closed from outside the spaces being ventilated. The means of closing are to be easily accessible as well as prominently and permanently marked and are to indicate whether the shutoff is open or closed.

(b) Power ventilation of accommodation spaces, service spaces, cargo spaces, control stations and machinery spaces are to be capable of being stopped from an easily accessible position outside the space being served. This position are not to be readily cut off in the event of a fire in the spaces served.

(c) In passenger ships carrying more than 36 passengers, power ventilation, except machinery space and cargo space ventilation and any alternative system which may be required under 6.1 of this Part, are to be fitted with controls so grouped that all fans may be stopped from either of two separate positions which are to be situated as far apart as practicable. Fans serving power ventilation systems to cargo spaces are to be capable of being stopped from a safe position outside such spaces.

3.1.2 Means of control in machinery spaces

(a) Means of control are to be provided for opening and closure of skylights, closure of openings in funnels which normally allow exhaust ventilation and closure of ventilator dampers.

(b) Means of control are to be provided for stopping ventilating fans. Controls provided for the power ventilation serving machinery spaces are to be grouped so as to be operable from two positions, one of which are to be outside such spaces. The means provided for stopping the power ventilation of the machinery spaces are to be entirely separate from the means provided for stopping ventilation of other spaces.

(c) Means of control are to be provided for stopping forced and induced draught fans, oil fuel transfer pumps, oil fuel unit pumps, lubricating oil service pumps, thermal oil circulating pumps and oil separators (purifiers). However, 2.1.2(d) and 2.1.2(e) of this Part need not apply to oily water separators.

(d) The controls required in 2.1.2(a) to 2.1.2(c) and in 2.1.2(c)(iv) of this Part are to be located outside the space concerned so they will not be cut off in the event of fire in the space they serve.

(e) In passenger ships, the controls required in paragraphs 2.1.2(a) to 2.1.2(d) and in 6.2.3 and 7.4.2(c) and the controls for any required fire-extinguishing system are to be situated at one control position or grouped in as few positions as possible to the satisfaction of the Society. Such positions are to have a safe access from the open deck.

3.1.3 Additional requirements for means of control in periodically unattended machinery spaces.

(a) For periodically unattended machinery spaces, the Society are to give special consideration to maintaining the fire integrity of the machinery spaces, the location and centralization of the fire-extinguishing system controls, the required shutdown arrangements (e.g. ventilation, fuel pumps, etc.) and that additional fire-extinguishing appliances and other fire-fighting equipment and breathing apparatus may be required.

(b) In passenger ships, these requirements are to be at least equivalent to those of machinery spaces normally attended.

3.2 Fire Protection Materials

3.2.1 Use of non-combustible materials

(a) Insulating materials

Insulating materials are to be non-combustible, except in cargo spaces, mail rooms, baggage rooms and refrigerated compartments of service spaces. Vapour barriers and adhesives used in conjunction with insulation, as well as the insulation of pipe fittings for cold service systems, need not be of non-combustible materials, but they are to be kept to the minimum quantity practicable and their exposed surfaces are to have low flame spread characteristics.

(b) Ceilings and linings

(i) In passenger ships, except in cargo spaces, all linings, grounds, draught stops and ceilings are to be of non-combustible material except in mail rooms, baggage rooms, saunas or refrigerated compartments of service spaces.

(ii) In cargo ships, all linings, ceilings, draught stops and their associated grounds are to be of non-combustible materials in the following spaces:

(1) in accommodation and service spaces and control stations for ships where Method IC is specified as referred to in 7.1.3(a) of this Part; and

(2) in corridors and stairway enclosures serving accommodation and service spaces and control stations for ships where Method IIC and IIIC are specified as referred to in 7.1.3(a) of this Part.

(c) Partial bulkheads and decks on passenger ships

(i) Partial bulkheads or decks used to subdivide a space for utility or artistic treatment are to be of non-combustible materials.

(ii) Linings, ceilings and partial bulkheads or decks used to screen or to separate adjacent cabin balconies are to be of non-combustible materials.

3.2.2 Use of combustible materials

(a) General

(i) In passenger ships, "A", "B" or "C" class divisions in accommodation and services spaces and cabin balconies which are faced with combustible materials, facings, mouldings, decorations and veneers are to comply with the provisions of 3.2.2(b) to 3.2.4(d) and Chapter 4 of this Part. However, traditional wooden benches and wooden linings on bulkheads and ceilings are permitted in saunas and such materials need not be subject to the calculations prescribed in 3.2.2(b) and 3.2.2(c) of this Part. However, the provisions of 3.2.2(c) of this Part need not be applied to cabin balconies.

(ii) In cargo ships, non-combustible bulkheads, ceilings and linings fitted in accommodation and service spaces may be faced with combustible materials, facings, mouldings, decorations and veneers provided such spaces are bounded by non-combustible bulkheads, ceilings and linings in accordance with the provisions of 3.2.2(b) to 3.2.2(d) and Chapter 4 of this Part.

(b) Maximum calorific value of combustible materials

Combustible materials used on the surfaces and linings specified in 3.2.2(a) of this Part are to have a calorific value* not exceeding 45 MJ/m^2 of the area for the thickness used. The requirements of this paragraph are not applicable to the surfaces of furniture fixed to linings or bulkheads.

* Refer to the recommendations published by the International Organization for Standardization, in particular, Publication ISO 1716, Reaction to fire tests for building and transport productions - Determination of the heat combustion.

(c) Total volume of combustible materials

Where combustible materials are used in accordance with 3.2.2(a) of this Part, they are to comply with the following requirements:

(i) The total volume of combustible facings, mouldings, decorations and veneers in accommodation and service spaces are not to exceed a volume equivalent to 2.5 mm veneer on the combined area of the walls and ceiling linings. Furniture fixed to linings, bulkheads or decks need not be included in the calculation of the total volume of combustible materials; and

(ii) In the case of ships fitted with an automatic sprinkler system complying with the provisions of the FSS Code, the above volume may include some combustible material used for erection of "C" class divisions.

(d) Low flame-spread characteristics of exposed surfaces

The following surfaces are to have low flame-spread characteristics in accordance with the FTP Code:

(i) In passenger ships:

(1) exposed surfaces in corridors and stairway enclosures and of bulkhead and ceiling linings in accommodation and service spaces (except saunas) and control stations; and

(2) surfaces and grounds in concealed or inaccessible spaces in accommodation and service spaces and control stations.

(3) exposed surfaces of cabin balconies, except for natural hard wood decking systems.

(ii) In cargo ships:

(1) exposed surfaces in corridors and stairway enclosures and of ceilings in accommodation and service spaces (except saunas) and control stations; and

(2) surfaces and grounds in concealed or inaccessible spaces in accommodation and service spaces and control stations.

3.2.3 Furniture in stairway enclosures of passenger ships

Furniture in stairway enclosures are to be limited to seating. It is to be fixed, limited to six seats on each deck in each stairway enclosure, be of restricted fire risk determined in accordance with the FTP Code, and are not to restrict the passenger escape route. The Society may permit additional seating in the main reception area within a stairway enclosure if it is fixed, non-combustible and does not restrict the passenger escape route. Furniture are not to be permitted in passenger and crew corridors forming escape routes in cabin areas. In addition to the above, lockers of non-combustible material, providing storage for non-hazardous safety equipment may be permitted. Drinking water dispensers and ice cube machines may be permitted in corridors provided they are fixed and do not restrict the width of the escape routes. This applies as well to decorative flower or plant arrangements, statues or other objects of art such as paintings and tapestries in corridors and stairways.

3.2.4 Furniture and furnishings on cabin balconies of passenger ships

On passenger ships, furniture and furnishings on cabin balconies are to comply with 1.5.40(a), 1.5.40(b), 1.5.40(c), 1.5.40(f) and 1.5.40(g) of this Part unless such balconies are protected by a fixed pressure water-spraying and fixed fire detection and fire alarm systems complying with 5.9 and 8.5.1(c) of this Part.

Chapter 4

Smoke Generation Potential and Toxicity

For Chapter 2 to Chapter 4, Guidelines for measures to prevent fires in engine-rooms and cargo pump-rooms (MSC.1/Circ.1321, as may be amended) are to be referred.

4.1 Paints, Varnishes and Other Finishes

4.1.1 Paints, varnishes and other finishes used on exposed interior surfaces are not to be capable of producing excessive quantities of smoke and toxic products, this being determined in accordance with the FTP Code.

4.1.2 On passenger ships, paints, varnishes and other finishes used on exposed surfaces of cabin balconies, excluding natural hard wood decking systems, are not to be capable of producing excessive quantities of smoke and toxic products, this being determined in accordance with the FTP Code.

4.2 Primary Deck Coverings

4.2.1 Primary deck coverings, if applied within accommodation and service spaces and control stations, are to be of approved material which will not give rise to smoke or toxic or explosive hazards at elevated temperatures, this being determined in accordance with the FTP Code.

4.2.2 On passenger ships, primary deck coverings on cabin balconies are not to give rise to smoke, toxic or explosive hazards at elevated temperatures, this being determined in accordance with the FTP Code.

Chapter 5
Detection and Alarm

5.1 General Requirements

5.1.1 A fixed fire detection and fire alarm system are to be provided in accordance with the provisions of this Chapter.

5.1.2 A fixed fire detection and fire alarm system and a sample extraction smoke detection system required in this chapter are to be of an approved type and comply with the FSS Code.

5.1.3 Where a fixed fire detection and fire alarm system is required for the protection of spaces other than those specified in 5.4.1 of this Part, at least one detector complying with the FSS Code is to be installed in each such space.

5.1.4 A fixed fire detection and fire alarm system for passenger ships is to be capable of remotely and individually identifying each detector and manually operated call point.

5.2 Initial and Periodical Tests

5.2.1 The function of fixed fire detection and fire alarm systems required by the relevant provisions of this Part are to be tested under varying conditions of ventilation after installation.

5.2.2 The function of fixed fire detection and fire alarm systems are to be periodically tested to the satisfaction of the Society by means of equipment producing hot air at the appropriate temperature, or smoke or aerosol particles having the appropriate range of density or particle size, or other phenomena associated with incipient fires to which the detector is designed to respond.

5.3 Protection of Machinery Spaces

5.3.1 Installation

A fixed fire detection and fire alarm system is to be installed in:

(a) periodically unattended machinery spaces; and

(b) machinery spaces where:

(i) the installation of automatic and remote control systems and equipment has been approved in lieu of continuous manning of the space; and

(ii) the main propulsion and associated machinery including sources of main source of electrical power are provided with various degrees of automatic or remote control and are under continuous manned supervision from a control room; and

(c) enclosed spaces containing incinerators.

5.3.2 Design

The fixed fire detection and fire alarm system required in 5.3.1(a) of this Part is to be so designed and the detectors so positioned as to detect rapidly the onset of fire in any part of those spaces and under any normal conditions of operation of the machinery and variations of ventilation as required by the possible range of ambient temperatures. Except in spaces of restricted height and where their use is specially appropriate, detection systems using only thermal detectors are not to be permitted. The detection system are to initiate audible and visual alarms distinct in both respects from the alarms of any other system not indicating fire, in sufficient places to ensure that the alarms are heard and observed on the navigating bridge and by a responsible engineer officer. When the navigating bridge is unmanned the alarm are to sound in a place where a responsible member of the crew is on duty.

5.4 Protection of Accommodation and Service Spaces and Control Stations

5.4.1 Smoke detectors in accommodation spaces

Smoke detectors are to be installed in all stairways, corridors and escape routes within accommodation spaces as provided in 5.4.2, 5.4.3 and 5.4.4 of this Part. Consideration are to be given to the installation of special purpose smoke detectors within ventilation ducting.

5.4.2 Requirements for passenger ships carrying more than 36 passengers

A fixed fire detection and fire alarm system are to be installed and arranged as to provide smoke detection in service spaces, control stations and accommodation spaces, including corridors, stairways and escape routes within accommodation spaces. Smoke detectors need not be fitted in private bathrooms and galleys. Spaces having little or no fire risk such as voids, public toilets, carbon dioxide rooms and similar spaces need not be fitted with a fixed fire detection and alarm system. Detectors fitted in cabins, when activated, are also to be capable of emitting, or cause to be emitted, an audible alarm within the space where they are located.

5.4.3 Requirements for passenger ships carrying not more than 36 passengers

There are to be installed throughout each separate zone, whether vertical or horizontal, in all accommodation and service spaces and, where it is considered necessary by the Society, in control stations, except spaces which afford no substantial fire risk such as void spaces, sanitary spaces, etc., either:

(a) a fixed fire detection and fire alarm system so installed and arranged as to detect the presence of fire in such spaces and providing smoke detection in corridors, stairways and escape routes within accommodation spaces. Detectors fitted in cabins, when activated, are to also be capable of emitting, or cause to be emitted, an audible alarm within the space where they are located; or

(b) an automatic sprinkler, fire detection and fire alarm system of an approved type complying with the relevant requirements of the FSS Code and so installed and arranged as to protect such spaces and, in addition, a fixed fire detection and fire alarm system and so installed and arranged as to provide smoke detection in corridors, stairways and escape routes within accommodation spaces.

5.4.4 Protection of atriums in passenger ships

The entire main vertical zone containing the atrium are to be protected throughout with a smoke detection system.

5.4.5 Cargo ships

Accommodation and service spaces and control stations of cargo ships are to be protected by a fixed fire detection and fire alarm system and/or an automatic sprinkler, fire detection and fire alarm system as follows depending on a protection method adopted in accordance with 7.1.3(a) of this Part.

(a) Method IC

A fixed fire detection and fire alarm system are to be so installed and arranged as to provide smoke detection in all corridors, stairways and escape routes within accommodation spaces.

(b) Method IIC

An automatic sprinkler, fire detection and fire alarm system of an approved type complying with the relevant requirements of the FSS Code are to be so installed and arranged as to protect accommodation spaces, galleys and other service spaces, except spaces which afford no substantial fire risk such as void spaces, sanitary spaces, etc. In addition, a fixed fire detection and fire alarm system are to be so installed and arranged as to provide smoke detection in all corridors, stairways and escape routes within accommodation spaces.

(c) Method IIIC

A fixed fire detection and fire alarm system are to be so installed and arranged as to detect the presence of fire in all accommodation spaces and service spaces providing smoke detection in corridors, stairways and escape routes within accommodation spaces, except spaces which afford no substantial fire risk such as void spaces, sanitary spaces, etc. In addition, a fixed fire detection and fire alarm system are to be so installed and arranged as to provide smoke detection in all corridors, stairways and escape routes within accommodation spaces.

5.5 Protection of Cargo Spaces in Passenger Ships

A fixed fire detection and fire alarm system or a sample extraction smoke detection system are to be provided in any cargo space which, in the opinion of the Society, is not accessible, except where it is shown to the satisfaction of the Society that the ship is engaged on voyages of such short duration that it would be unreasonable to apply this requirement.

5.6 Manually Operated Call Points

Manually operated call points complying with the FSS Code are to be installed throughout the accommodation spaces, service spaces and control stations. One manually operated call point is to be located at each exit. Manually operated call points are to be readily accessible in the corridors of each deck such that no part of the corridor is more than 20 m from a manually operated call point.

5.7 Fire Patrols in Passenger Ships

5.7.1 Fire patrols

For ships carrying more than 36 passengers an efficient patrol system are to be maintained so that an outbreak of fire may be promptly detected. Each member of the fire patrol are to be trained to be familiar withthe arrangements of the ship as well as the location and operation of any equipment he may be called upon to use.

5.7.2 Inspection hatches

The construction of ceiling and bulkheads are to be such that it will be possible, without impairing the efficiency of the fire protection, for the fire patrols to detect any smoke originating in concealed and inaccessible places, except where in the opinion of the Society there is no risk of fire originating in such places.

5.7.3 Two-way portable radiotelephone apparatus

Each member of the fire patrol are to be provided with a two-way portable radiotelephone apparatus.

5.8 Fire Alarm Signalling Systems in Passenger Ships*

* Refer to the Code on Alerts and Indicators as adopted by the IMO by resolution A.1021(26), as may be amended.

5.8.1 Passenger ships are to at all times when at sea, or in port (except when out of service), be so manned or equipped as to ensure that any initial fire alarm is immediately received by a responsible member of the crew.

5.8.2 The control panel of fixed fire detection and fire alarm systems are to be designed on the fail-safe principle (e.g. an open detector circuit is to cause an alarm condition).

5.8.3 Passenger ships carrying more than 36 passengers are to have the fire detection alarms for the systems required by 5.4.2 of this Part centralized in a continuously manned central control station. In addition, controls for remote closing of the fire doors and shutting down the ventilation fans are to be centralized in the same location. The ventilation fans are to be capable of reactivation by the crew at the continuously manned control station. The control panels in the central control station are to be capable of indicating open or closed positions of fire doors and closed or off status of the detectors, alarms and fans. The control panel are to be continuously powered and are to have an automatic change-over to standby power supply in case of loss of normal power supply. The control panel are to be powered from the main source of electrical power and the emergency source of electrical power unless other arrangements are permitted by the rules, as applicable.

5.8.4 A special alarm, operated from the navigation bridge or fire control station, are to be fitted to summon the crew. This alarm may be part of the ship's general alarm system and are to be capable of being sounded independently of the alarm to the passenger spaces.

5.9 Protection of Cabin Balconies on Passenger Ships

A fixed fire detection and fire alarm system complying with the provisions of the FSS Code are to be installed on cabin balconies of ships to which 3.2.4 of this Part applies, when furniture and furnishings on such balconies are not as defined in 1.5.40(a), 1.5.40(b), 1.5.40(c), 1.5.40(f) and 1.5.40(g) of this Part.

Chapter 6

Control of Smoke Spread

6.1 Protection of Control Stations Outside Machinery Spaces

Practicable measures are to be taken for control stations outside machinery spaces in order to ensure that ventilation, visibility and freedom from smoke are maintained so that, in the event of fire, the machinery and equipment contained therein may be supervised and continue to function effectively. Alternative and separate means of air supply are to be provided and air inlets of the two sources of supply are to be so disposed that the risk of both inlets drawing in smoke simultaneously is minimized. At the discretion of the Society, such requirements need not apply to control stations situated on, and opening on to, an open deck or where local closing arrangements would be equally effective.

The ventilation system serving safety centres may be derived from the ventilation system serving the navigation bridge, unless located in an adjacent main vertical zone.

6.2 Release of Smoke from Machinery Spaces

6.2.1 The provisions of this paragraph are to apply to machinery spaces of category A and, where the Society considers desirable, to other machinery spaces.

6.2.2 Suitable arrangements are to be made to permit the release of smoke, in the event of fire, from the space to be protected, subject to the provisions of 7.4.2 of this Part. The normal ventilation systems may be acceptable for this purpose.

6.2.3 Means of control are to be provided for permitting the release of smoke and such controls are to be located outside the space concerned so that, in the event of fire, they will not be cut off from the space they serve.

6.2.4 In passenger ships, the controls required by 6.2.3 of this Part are to be situated at one control position or grouped in as few positions as possible to the satisfaction of the Society. Such positions are to have a safe access from the open deck.

6.3 Draught Stops

Air spaces enclosed behind ceilings, panelling or linings are to be divided by close-fitting draught stops spaced not more than 14 m apart. In the vertical direction, such enclosed air spaces, including those behind linings of stairways, trunks, etc., are to be closed at each deck.

6.4 Smoke Extraction Systems in Atriums of Passenger Ships

Atriums are to be equipped with a smoke extraction system. The smoke extraction system is to be activated by the required smoke detection system and be capable of manual control. The fans are to be sized such that the entire volume within space can be exhausted in 10 min. or less.

Chapter 7

Containment of Fire

7.1 Thermal and Structural Boundaries

7.1.1 Thermal and structural subdivision

Ships of all types are to be subdivided into spaces by thermal and structural divisions having regard to the fire risks of the space.

7.1.2 Passenger ships

(a) Main vertical zones and horizontal zones

(i) The hull, superstructure and deckhouses

(1) In ships carrying more than 36 passengers, the hull, superstructure and deckhouses are to be subdivided into main vertical zones by "A-60" class divisions. Steps and recesses are to be kept to a minimum, but where they are necessary they are to also be "A-60" class divisions. Where a category e), i) or j) space defined in paragraph 7.1.2(c)(ii)(2) of this Part is on one side or where fuel oil tanks are on both sides of the division the standard may be reduced to "A-0".

(2) In ships carrying not more than 36 passengers, the hull, superstructure and deckhouses in way of accommodation and service spaces are to be subdivided into main vertical zones by "A" class divisions. These divisions are to have insulation values in accordance with Tables in 7.1.2(d) of this Part.

(ii) As far as practicable, the bulkheads forming the boundaries of the main vertical zones above the bulkhead deck are to be in line with watertight subdivision bulkheads situated immediately below the bulkhead deck. The length and width of main vertical zones may be extended to a maximum of 48 m in order to bring the ends of main vertical zones to coincide with watertight subdivision bulkheads or in order to accommodate a large public space extending for the whole length of the main vertical zone provided that the total area of the main vertical zone is not greater than 1,600 m^2 on any deck. The length or width of a main vertical zone is the maximum distance between the furthermost points of the bulkheads bounding it.

(iii) Such bulkheads are to extend from deck to deck and to the shell or other boundaries.

(iv) Where a main vertical zone is subdivided by horizontal "A" class divisions into horizontal zones for the purpose of providing an appropriate barrier between a zone with sprinklers and a zone without sprinklers, the divisions are to extend between adjacent main vertical zone bulkheads and to the shell or exterior boundaries of the ship and are to be insulated in accordance with the fire insulation and integrity values given in Table IX 7-4.

(v) Ships designed for special purposes or in a ship with special category spaces

(1) On ships designed for special purposes, such as automobile or railroad car ferries, where the provision of main vertical zone bulkheads would defeat the purpose for which the ship is intended, equivalent means for controlling and limiting a fire are to be substituted and specifically approved by the Society. Service spaces and ship stores are not to be located on Ro-Ro decks unless protected in accordance with the applicable provisions.

(2) However, in a ship with special category spaces, such spaces are to comply with the applicable provisions of 13.3 of this Part and where such compliance would be inconsistent with other requirements for passenger ships specified in this chapter, the requirements of 13.3 of this Part are to prevail.

(b) Bulkheads within a main vertical zone

(i) For ships carrying more than 36 passengers, bulkheads which are not required to be "A" class divisions are to be at least "B" class or "C" class divisions as prescribed in the tables in paragraph 7.1.2(c) of this Part.

(ii) For ships carrying not more than 36 passengers, bulkheads within accommodation and service spaces which are not required to be "A" class divisions are to be at least "B" class or "C" class divisions as

prescribed in the tables in 7.1.2(d) of this Part. In addition, corridor bulkheads, where not required to be "A" class, are to be "B" class divisions which are to extend from deck to deck except:

(1) when continuous "B" class ceilings or linings are fitted on both sides of the bulkhead, the portion of the bulkhead behind the continuous ceiling or lining are to be of material which, in thickness and composition, is acceptable in the construction of "B" class divisions, but which are to be required to meet "B" class integrity standards only in so far as is reasonable and practicable in the opinion of the Society; and

(2) in the case of a ship protected by an automatic sprinkler system complying with the provisions of the FSS Code, the corridor bulkheads may terminate at a ceiling in the corridor provided such bulkheads and ceilings are of "B" class standard in compliance with 7.1.2(d) of this Part. All doors and frames in such bulkheads are to be of non-combustible materials and are to have the same fire integrity as the bulkhead in which they are fitted.

(iii) Bulkheads required to be "B" class divisions, except corridor bulkheads as prescribed in paragraph 7.1.2(b)(ii) of this Part, are to extend from deck to deck and to the shell or other boundaries. However, where a continuous "B" class ceiling or lining is fitted on both sides of a bulkhead which is at least of the same fire resistance as the adjoining bulkhead, the bulkhead may terminate at the continuous ceiling or lining.

(c) Fire integrity of bulkheads and decks in ships carrying more than 36 passengers

(i) In addition to complying with the specific provisions for fire integrity of bulkheads and decks of passenger ships, the minimum fire integrity of all bulkheads and decks are to be as prescribed in Table IX 7-1 and Table IX 7-2. Where, due to any particular structural arrangements in the ship, difficulty is experienced in determining from the tables the minimum fire integrity value of any divisions, such values are to be determined to the satisfaction of the Society.

(ii) The following requirements are to govern application of the tables:

(1) Table IX 7-1 are to apply to bulkheads not bounding either main vertical zones or horizontal zones. Table IX 7-2 are to apply to decks not forming steps in main vertical zones nor bounding horizontal zones.

(2) For determining the appropriate fire integrity standards to be applied to boundaries between adjacent spaces, such spaces are classified according to their fire risk as shown in categories a) to n) below. Where the contents and use of a space are such that there is a doubt as to its classification for the purpose of this Chapter, or where it is possible to assign two or more classifications to a space, it is to be treated as a space within the relevant category having the most stringent boundary requirements. Smaller, enclosed rooms within a space that have less than 30% communicating openings to that space are considered separate spaces. The fire integrity of the boundary bulkheads and decks of such smaller rooms are to be as prescribed in Table IX 7-1 and Table IX 7-2. The title of each category is intended to be typical rather than restrictive. The letter in parentheses preceding each category refers to the applicable column or row in the tables.

a) Control stations

Spaces containing emergency sources of power and lighting.

Wheelhouse and chartroom.

Spaces containing the ship's radio equipment.

Fire control stations

Control room for propulsion machinery when located outside the propulsion machinery space.

Spaces containing centralized fire alarm equipment.

Spaces containing centralized emergency public address system stations and equipment.

b) Stairways

Interior stairways, lifts, totally enclosed emergency escape trunks, and escalators (other than those wholly contained within the machinery spaces) for passengers and crew and enclosures thereto.In this connection a stairway which is enclosed at only one level are to be regarded as part of the space from which it is not separated by a fire door.

c) Corridors

Passenger and crew corridors and lobbies.

d) Evacuation stations and external escape routes

Survival craft stowage area.

Open deck spaces and enclosed promenades forming lifeboat and liferaft embarkation and lowering stations.

Assembly stations, internal and external.

External stairs and open decks used for escape routes.

The ship's side to the waterline in the lightest seagoing condition, superstructure and deckhouse sides situated below and adjacent to the liferaft and evacuation slide embarkation areas.

e) Open deck spaces

Open deck spaces and enclosed promenades clear of lifeboat and liferaft embarkation and lowering stations. To be considered in this category, enclosed promenades are to have no significant fire risk, meaning that furnishings are to be restricted to deck furniture. In addition, such spaces are to be naturally ventilated by permanent openings. Air spaces (the space outside superstructures and deckhouses).

f) Accommodation spaces of minor fire risk

Cabins containing furniture and furnishings of restricted fire risk.

Offices and dispensaries containing furniture and furnishings of restricted fire risk.

Public spaces containing furniture and furnishings of restricted fire risk and having a deck area of less than 50 m^2.

g) Accommodation spaces of moderate fire risk

Spaces as in category f) above but containing furniture and furnishings of other than restricted fire risk.

Public spaces containing furniture and furnishings of restricted fire risk and having a deck area of 50 m^2 or more.

Isolated lockers and small store-rooms in accommodation spaces having areas less than 4 m^2 (in which flammable liquids are not stowed).

Motion picture projection and film stowage rooms. Diet kitchens (containing no open flame).

Cleaning gear lockers (in which flammable liquids are not stowed).

Laboratories (in which flammable liquids are not stowed).

Pharmacies.

Small drying rooms (having a deck area of 4 m^2 or less).

Specie rooms.

Operating rooms.

h) Accommodation spaces of greater fire risk

Public spaces containing furniture and furnishings of other than restricted fire risk and having a deck area of 50 m^2 or more.

Barber shops and beauty parlours. Saunas

Sale shops

i) Sanitary and similar spaces

Communal sanitary facilities, showers, baths, water closets, etc.

Small laundry rooms.

Indoor swimming pool area.

Isolated pantries containing no cooking appliances in accommodation spaces.

Private sanitary facilities are to be considered a portion of the space in which they are located.

j) Tanks, voids and auxiliary machinery spaces having little or no fire risk

Water tanks forming part of the ship's structure.

Voids and cofferdams.

Auxiliary machinery spaces which do not contain machinery having a pressure lubrication system and where storage of combustibles is prohibited, such as:

ventilation and air-conditioning rooms;

windlass room; steering gear room;

stabilizer equipment room;

electrical propulsion motor room;

rooms containing section switchboards and purely electrical equipment other than oil-filled electrical transformers (above 10 kVA);

shaft alleys and pipe tunnels;

spaces for pumps and refrigeration machinery (not handling or using flammable liquids).

Closed trunks serving the spaces listed above.

Other closed trunks such as pipe and cable trunks.

k) Auxiliary machinery spaces, cargo spaces, cargo and other oil tanks and other similar spaces of moderate fire risk

Cargo oil tanks.

Cargo holds, trunkways and hatchways.

Refrigerated chambers.

Oil fuel tanks (where installed in a separate space with no machinery).

Shaft alleys and pipe tunnels allowing storage of combustibles.

Auxiliary machinery spaces as in category j) which contain machinery having a pressure lubrication system or where storage of combustibles is permitted.

Oil fuel filling stations.

Spaces containing oil-filled electrical transformers (above 10 kVA).

Spaces containing turbine and reciprocating steam engine driven auxiliary generators and small internal combustion engines of power output up to 110 kW driving generators, sprinkler, drencher or firepumps, bilge pumps, etc.

Closed trunks serving the spaces listed above.

l) Machinery spaces and main galleys

Main propulsion machinery rooms (other than electric propulsion motor rooms) and boiler rooms.

Auxiliary machinery spaces other than those in categories j) and k) which contain internal combustion machinery or other oil-burning, heating or pumping units.

Main galleys and annexes.

Trunks and casings to the spaces listed above.

m) Store-rooms, workshops, pantries, etc.

Main pantries not annexed to galleys.

Main laundry.

Large drying rooms (having a deck area of more than 4 m^2)

Miscellaneous stores.

Mail and baggage rooms.

Garbage rooms.

Workshops (not part of machinery spaces, galleys, etc.).

Lockers and store-rooms having areas greater than 4 m^2 , other than those spaces that have provisions for the storage of flammable liquids.

n) Other spaces in which flammable liquids are stowed

Paint lockers.

Store-rooms containing flammable liquids (including dyes, medicines, etc.).

Laboratories (in which flammable liquids are stowed)

(3) Where a single value is shown for the fire integrity of a boundary between two spaces, that value are to apply in all cases;

(4) Notwithstanding the provisions of paragraph 7.1.2(b) of this Part there are no special requirements for material or integrity of boundaries where only a dash appears in the tables; and

(5) The Society are to determine in respect of category e) spaces whether the insulation values in Table IX 7-1 are to apply to ends of deckhouses and superstructures, and whether the insulation values in Table IX 7-2 are to apply to weather decks. In no case are to the requirements of category e) of Table IX 7-1 or Table IX 7-2 necessitate enclosure of spaces which in the opinion of the Society need not be enclosed.

Table IX 7-1
Bulkheads not Bounding Either Main Vertical Zones or Horizontal Zones

Spaces		a)	b)	c)	d)	e)	f)	g)	h)	i)	j)	k)	l)	m)	n)
Control stations	a)	B-0(1)	A-0	A-0	A-0	A-0	A-60	A-60	A-60	A-0	A-0	A-60	A-60	A-60	A-60
Stairways	b)		A-0(1)	A-0	A-0	A-0	A-0	A-15	A-15	A-0(3)	A-0	A-15	A-30	A-15	A-30
Corridors	c)			B-15	A-60	A-0	B-15	B-15	B-15	B-15	A-0	A-15	A-30	A-0	A-30
Evacuation stations and external escape routes	d)					A-0	A-60 (2). (4)	A-60 (2).(4)	A-60 (2).(4)	A-0(4)	A-0	A-60 (2)	A-60 (2)	A-60 (2)	A-60 (2)
Open deck spaces	e)						A-0	A-0	A-0	A-0	A-0	A-0	A-0	A-0	A-0
Accommodation spaces of minor fire risk	f)						B-0	B-0	B-0	C	A-0	A-0	A-30	A-0	A-30
Accommodation spaces of moderate fire risk.	g)							B-0	B-0	C	A-0	A-15	A-60	A-15	A-60
Accommodation spaces of greater fire risk.	h)								B-0	C	A-0	A-30	A-60	A-15	A-60
Sanitary and similar spaces	i)									C	A-0	A-0	A-0	A-0	A-0
Tanks, voids and auxiliary machinery spaces having little no fire risk	j)										A-0(1)	A-0	A-0	A-0	A-0
Auxiliary machinery spaces, cargo spaces, cargo and other oil thanks and other similar spaces of moderate fire risk	k)											A-0(1)	A-0	A-0	A-15
Machinery spaces and main galleys	l)												A-0(1)	A-0	A-60
Store-rooms, workshops, pantries, etc.	m)													A-0(1)	A-0
Other spaces in which flammable liquids are stowed	n)														A-30

See notes following Table IX 7-2

Table IX 7-2
Decks not Forming Steps in Main Vertical Zones nor Bounding Horizontal Zones

Space below ↓ Space above →		a)	b)	c)	d)	e)	f)	g)	h)	i)	j)	k)	l)	m)	n)
Control stations	a)	A-30	A-30	A-15	A-0	A-0	A-0	A-15	A-30	A-0	A-0	A-0	A-60	A-0	A-60
Stairways	b)	A-0	A-0	A-0	A-0	A-0	A-0	A-0	A-0	A-0	A-0	A-0	A-30	A-0	A-30
Corridors	c)	A-15	A-0	A-0(1)	A-60	A-0	A-0	A-15	A-15	A-0	A-0	A-0	A-30	A-0	A-30
Evacuation stations and external escape routes	d)	A-0	A-0	A-0	A-0	-	A-0	A-0	A-0	A-0	A-0	A-0	A-0	A-0	A-0
Open deck spaces	e)	A-0	A-0	A-0	A-0	-	A-0	A-0	A-0	A-0	A-0	A-0	A-0	A-0	A-0
Accommodation spaces of minor fire risk	f)	A-60	A-15	A-0	A-60	A-0	A-0	A-0	A-0	A-0	A-0	A-0	A-0	A-0	A-0
Accommodation spaces of moderate fire risk.	g)	A-60	A-15	A-15	A-60	A-0	A-0	A-15	A-15	A-0	A-0	A-0	A-0	A-0	A-0
Accommodation spaces of greater fire risk.	h)	A-60	A-15	A-15	A-60	A-0	A-15	A-15	A-30	A-0	A-0	A-0	A-0	A-0	A-0
Sanitary and similar spaces	i)	A-0	A-0	A-0	A-0	A-0	A-0	A-0	A-0	A-0	A-0	A-0	A-0	A-0	A-0
Tanks, voids and auxiliary machinery spaces having little no fire risk	j)	A-0	A-0	A-0	A-0	A-0	A-0	A-0	A-0	A-0	A-0(1)	A-0	A-0	A-0	A-0
Auxiliary machinery spaces, cargo spaces, cargo and other oil thanks and other similar spaces of moderate fire risk	k)	A-60	A-60	A-60	A-60	A-0	A-0	A-15	A-30	A-0	A-0	A-0(1)	A-0	A-0	A-30
Machinery spaces and main galleys	l)	A-60	A-60	A-60	A-60	A-0	A-60	A-60	A-60	A-0	A-0	A-30	A-30(1)	A-0	A-60
Store-rooms, workshops, pantries, etc.	m)	A-60	A-30	A-15	A-60	A-0	A-15	A-30	A-30	A-0	A-0	A-0	A-0	A-0	A-0
Other spaces in which flammable liquids are stowed	n)	A-60	A-60	A-60	A-60	A-0	A-30	A-60	A-60	A-0	A-0	A-0	A-0	A-0	A-0

Notes: To be applied to Table IX 7-1 and Table IX 7-2.

(1) Where adjacent spaces are in the same category and superscript (1) appears, a bulkhead or deck between such spaces need not be fitted if deemed unnecessary by the Society. For example, in category l) a bulkhead need not be required between a galley and its annexed pantries provided the pantry bulkhead and decks maintain the integrity of the galley boundaries. A bulkhead is, however, required between a galley and machinery space even though both spaces are in category l).

(2) The ship's side, to the waterline in the lightest seagoing condition, superstructure and deckhouse sides situated below and adjacent to liferafts and evacuation slides may be reduced to "A-30".

(3) Where public toilets are installed completely within the stairway enclosure, the public toilet bulkhead within the stairway enclosure can be of "B" class integrity.

(4) Where spaces of categories f), g), h) and i) are located completely within the outer perimeter of the assembly station, the bulkheads of these spaces are allowed to be of "B-0" class integrity. Control positions for audio, video and light installations may be considered as part of the assembly station.

(iii) Continuous "B" class ceilings or linings, in association with the relevant decks or bulkheads, may be accepted as contributing wholly or in part, to the required insulation and integrity of a division.

(iv) Construction and arrangement of saunas

(1) The perimeter of the sauna are to be of "A" class boundaries and may include changing rooms, showers and toilets. The sauna are to be insulated to A-60 standard against other spaces except those inside of the perimeter and spaces of categories e), i) and j).

(2) Bathrooms with direct access to saunas may be considered as part of them. In such cases, the door between sauna and the bathroom need not comply with fire safety requirements.

(3) The traditional wooden lining on the bulkheads and ceiling are permitted in the sauna. The ceiling above the oven are to be lined with a non-combustible plate with an air gap of at least 30 mm. The distance from the hot surfaces to combustible materials are to be at least 500 mm or

the combustible materials are to be protected (e.g. non-combustible plate with an air gap of at least 30 mm).

(4) The traditional wooden benches are permitted to be used in the sauna.

(5) The sauna door are to open outwards by pushing.

(6) Electrically heated ovens are to be provided with a timer.

(d) Fire integrity of bulkheads and decks in ships carrying not more than 36 passengers

(i) In addition to complying with the specific provisions for fire integrity of bulkheads and decks of passenger ships, the minimum fire integrity of bulkheads and decks are to be as prescribed in Table IX 7-3 and Table IX 7-4.

(ii) The following requirements govern application of the tables:

(1) Table IX 7-3 and Table IX 7-4 are to apply respectively to the bulkheads and decks separating adjacent spaces.

(2) For determining the appropriate fire integrity standards to be applied to divisions between adjacent spaces, such spaces are classified according to their fire risk as shown in categories a) to k) below. Where the contents and use of a space are such that there is a doubt as to its classification for the purpose of this Chpater, or where it is possible to assign two or more classifications to a space, it is to be treated as a space within the relevant category having the most stringent boundary requirements. Smaller, enclosed rooms within a space that have less than 30% communicating openings to that space are considered separate spaces. The fire integrity of the boundary bulkheads and decks of such smaller rooms are to be as prescribed in Table IX 7-3 and Table IX 7-4. The title of each category is intended to be typical rather than restrictive. The letter in parentheses preceding each category refers to the applicable column or row in the tables.

a) Control stations

Spaces containing emergency sources of power and lighting.

Wheelhouse and chartroom.

Spaces containing the ship's radio equipment.

Fire control stations.

Control room for propulsion machinery when located outside the machinery space.

Spaces containing centralized fire alarm equipment.

b) Corridors

Passenger and crew corridors and lobbies.

c) Accommodation spaces

Spaces as defined in 1.5.1 of this Part excluding corridors.

d) Stairways

Interior stairways, lifts, totally enclosed emergency escape trunks , and escalators (other than those wholly contained within the machinery spaces) and enclosures thereto.

In this connection, a stairway which is enclosed only at one level are to be regarded as part of the space from which it is not separated by a fire door.

e) Service spaces (low risk)

Lockers and store-rooms not having provisions for the storage of flammable liquids and having areas less than 4 m^2 and drying rooms and laundries.

f) Machinery spaces of category A

Spaces as defined in 1.5.31 of this Part.

g) Other machinery spaces

Electrical equipment rooms (auto-telephone exchange, air-conditioning duct spaces).
Spaces as defined in 1.5.30 of this Part excluding machinery spaces of category A.

h) Cargo spaces

All spaces used for cargo (including cargo oil tanks) and trunkways and hatchways to such spaces, other than special category spaces.

i) Service spaces (high risk)

Galleys, pantries containing cooking appliances, paint and lamp rooms, lockers and storerooms having areas of 4 m^2 or more, spaces for the storage of flammable liquids, saunas and workshops other than those forming part of the machinery spaces.

j) Open decks

Open deck spaces and enclosed promenades having little or no fire risk. Enclosed promenades are to have no significant fire risk, meaning that furnishing are to be restricted to deck furniture. In addition, such spaces are to be naturally ventilated by permanent openings.
Air spaces (the space outside superstructures and deckhouses).

k) Special category spaces and Ro-Ro space

Spaces as defined in 1.5.41 and 1.5.46 of this Part.

(3) In determining the applicable fire integrity standard of a boundary between two spaces within a main vertical zone or horizontal zone which is not protected by an automatic sprinkler system complying with the provisions of the FSS Code or between such zones neither of which is so protected, the higher of the two values given in the tables are to apply;

(4) In determining the applicable fire integrity standard of a boundary between two spaces within a main vertical zone or horizontal zone which is protected by an automatic sprinkler system complying with the provisions of the FSS Code or between such zones both of which are so protected, the lesser of the two values given in the tables are to apply. Where a zone with sprinklers and a zone without sprinklers meet within accommodation and service spaces, the higher of the two values given in the tables are to apply to the division between the zones;

(iii) Continuous "B" class ceilings or linings, in association with the relevant decks or bulkheads, may be accepted as contributing, wholly or in part, to the required insulation and integrity of a division.

(iv) External boundaries which are required in 9.1 of this Part to be of steel or other equivalent material may be pierced for the fitting of windows and sidescuttles provided that there is no requirement for such boundaries of passenger ships to have "A" class integrity. Similarly, in such boundaries which are not required to have "A" class integrity, doors may be constructed of materials which are to the satisfaction of the Society.

(v) Saunas are to comply with paragraph 7.1.2(c)(iv) of this Part.

Table IX 7-3
Fire Integrity of Bulkheads Separating Adjacent Spaces

Spaces		a)	b)	c)	d)	e)	f)	g)	h)	i)	j)	k)
Control stations	a)	A-0(3)	A-0	A-60	A-0	A-15	A-60	A-15	A-60	A-60	*	A-60
Corridors	b)		C(5)	B-0(5)	A-0(1) B-0(5)	B-0(5)	A-60	A-0	A-0	A-15 A-0(4)	*	*A-30*
Accommodation spaces	c)			C(5)	A-0(1) B-0(5)	B-0(5)	A-60	A-0	A-0	A-15 A-0(4)	*	A-30 A-0(4)
Stairways	d)				A-0(1) B-0(5)	A-0(1) B-0(5)	A-60	A-0	A-0	A-15 A-0(4)	*	*A-30*
Service spaces (low risk)	e)					C(5)	A-60	A-0	A-0	A-0	*	A-0
Machinery spaces of category A	f)						*	A-0	A-0	A-60	*	A-60
Other machinery spaces	g)							A-0(2)	A-0	A-0	*	A-0
Cargo spaces	h)								*	A-0	*	A-0
Service spaces (high risks)	i)									A-0(2)	*	A-30
Open decks	j)										*	A-0
Special category spaces and Ro-Ro spaces	k)											*A-30*

See notes following Table IX 7-4.

Table IX 7-4
Fire Integrity of Decks Separating Adjacent Spaces

Spaces		a)	b)	c)	d)	e)	f)	g)	h)	i)	j)	k)
Control stations	a)	A-0	A-0	A-0	A-0	A-0	A-60	A-0	A-0	A-0	*	A-60
Corridors	b)	A-0	*	*	A-0	*	A-60	A-0	A-0	A-0	*	A-30
Accommodation spaces	c)	A-60	A-0	*	A-0	*	A-60	A-0	A-0	A-0	*	A-30 A-0(4)
Stairways	d)	A-0	A-0	A-0	*	A-0	A-60	A-0	A-0	A-0	*	A-30
Service spaces (low risk)	e)	A-15	A-0	A-0	A-0	*	A-60	A-0	A-0	A-0	*	A-0
Machinery spaces of category A	f)	A-60	A-60	A-60	A-60	A-60	*	A-60(6)	A-30	A-60	*	A-60
Other machinery spaces	g)	A-15	A-0	A-0	A-0	A-0	A-0	*	A-0	A-0	*	A-0
Cargo spaces	h)	A-60	A-0	A-0	A-0	A-0	A-0	A-0	*	A-0	*	A-0
Service spaces (high risks)	i)	A-60	A-30 A-0(4)	A-30 A-0(4)	A-30	A-0	A-60	A-0	A-0	A-0	*	A-30
Open decks	j)	*	*	*	*	*	*	*	*	*	-	A-0
Special category spaces and Ro-Ro spaces	k)	A-60	A-30	A-30	A-30	A-0	A-60	A-0	A-0	A-30	A-0	A-30

Notes: To be applied to both Table IX 7-3 and Table IX 7-4 as appropriate.

(1) For clarification as to which applies, see 7.1.2(b) and 7.1.2(e) of this Part.

(2) Where spaces are of the same category and superscript (2) appears, a bulkhead or deck of the rating shown in the tables is only required when the adjacent spaces are for a different purpose, (e.g., in category i)). A galley next to a galley does not require a bulkhead but a galley next to a paint room requires an "A-0" bulkhead.

(3) Bulkhead separating the wheelhouse and chartroom from each other may have a "B-0" rating. No fire rating is required for those partitions separating the navigation bridge and the safety centre when the latter is within the navigation bridge.

(4) See paragraphs 7.1.2(d)(ii)(3) and 7.1.2(d)(ii)(4) of this Part.

(5) For the application of paragraph 7.1.2(a)(i)(2) of this Part, "B-0" and "C", where appearing in Table IX 7-3, are to be read as "A-0".

(6) Fire insulation need not be fitted if the machinery space in category g), in the opinion of the Society, has little or no fire risk.

* Where an asterisk appears in the tables, the division is required to be of steel or other equivalent material, but is not required to be of "A" class standard. However, where a deck, except in a category j) space, is penetrated for the passage of electric cables, pipes and vent ducts, such penetrations are to be made tight to prevent the passage of flame and smoke. Divisions between control stations (emergency generators) and open decks may have air intake openings without means for closure, unless a fixed gas fire-fighting system is fitted.

For the application of paragraph 7.1.2(a)(i)(2) of this Part, an asterisk, where appearing in Table IX 7-4, except for categories h) and j), are to be read as "A-0".

(e) Protection of stairways and lifts in accommodation area

(i) Stairways are to be within enclosures formed of "A" class divisions, with positive means of closure at all openings, except that:

(1) a stairway connecting only two decks need not be enclosed, provided the integrity of the deck is maintained by proper bulkheads or self-closing doors in one 'tween-deck space. When a stairway is closed in one 'tween-deck space, the stairway enclosure are to be protected in accordance with the tables for decks in paragraphs 7.1.2(c) or 7.1.2(d) of this Part; and

(2) stairways may be fitted in the open in a public space, provided they lie wholly within the public space.

(ii) Lift trunks are to be so fitted as to prevent the passage of smoke and flame from one 'tween-deck to another and are to be provided with means of closing so as to permit the control of draught and smoke. Machinery for lifts located within stairway enclosures are to be arranged in a separate room, surrounded by steel boundaries, except that small passages for lift cables are permitted. Lifts which

open into spaces other than corridors, public spaces, special category spaces, stairways and external areas are not to open into stairways included in the means of escape.

(f) Arrangement of cabin balconies

On passenger ships, non-load bearing partial bulkheads which separate adjacent cabin balconies are to be capable of being opened by the crew from each side for the purpose of fighting fires.

(g) Protection of atriums

(i) Atriums are to be within enclosures formed of "A" class divisions having a fire rating determined in accordance with Table IX 7-2 and Table IX 7-4, as applicable.

(ii) Decks separating spaces within atriums are to have a fire rating determined in accordance with Table IX 7-2 and Table IX 7-4, as applicable.

7.1.3 Cargo Ships except tankers

(a) Methods of protection in accommodation area

(i) One of the following methods of protection are to be adopted in accommodation and service spaces and control stations:

(1) Method IC - The construction of internal divisional bulkheads of non-combustible "B" or "C" class divisions generally without the installation of an automatic sprinkler, fire detection and fire alarm system in the accommodation and service spaces, except as required by 5.4.5(a) of this Part; or

(2) Method IIC - The fitting of an automatic sprinkler, fire detection and fire alarm system as required by 5.4.5(b) of this Part for the detection and extinction of fire in all spaces in which fire might be expected to originate, generally with no restriction on the type of internal divisional bulkheads; or

(3) Method IIIC - The fitting of a fixed fire detection and fire alarm system as required by 5.4.5(c) of this Part, in spaces in which a fire might be expected to originate, generally with no restriction on the type of internal divisional bulkheads, except that in no case must the area of any accommodation space or spaces bounded by an "A" or "B" class division exceed 50 m^2. Consideration may be given by the Society to increasing this area for public spaces.

(ii) The requirements for the use of non-combustible materials in the construction and insulation of boundary bulkheads of machinery spaces, control stations, service spaces, etc., and the protection of the above stairway enclosures and corridors will be common to all three methods outlined in paragraph 7.1.3(a)(i) of this Part.

(b) Bulkheads within accommodation area

(i) Bulkheads required to be "B" class divisions are to extend from deck to deck and to the shell or other boundaries. However, where a continuous "B" class ceiling or lining is fitted on both sides of the bulkhead, the bulkhead may terminate at the continuous ceiling or lining.

(ii) Method IC - Bulkheads not required by this or other chapters for cargo ships to be "A" or "B" class divisions, are to be of at least "C" class construction.

(iii) Method IIC - There are to be no restriction on the construction of bulkheads not required by this or other chapters for cargo ships to be "A" or "B" class divisions except in individual cases where "C" class bulkheads are required in accordance with Table IX 7-5.

(iv) Method IIIC - There are to be no restriction on the construction of bulkheads not required for cargo ships to be "A" or "B" class divisions except that the area of any accommodation space or spaces bounded by a continuous "A" or "B" class division must in no case exceed 50 m^2 , except in individual cases where "C" class bulkheads are required in accordance with Table IX 7-5. Consideration may be given by the Society to increasing this area for public spaces.

(c) Fire integrity of bulkheads and decks

(i) In addition to complying with the specific provisions for fire integrity of bulkheads and decks of cargo ships, the minimum fire integrity of bulkheads and decks are to be as prescribed in Table IX 7-5 and Table IX 7-6.

(ii) The following requirements are to govern application of the tables:

(1) Table IX 7-5 and Table IX 7-6 are to apply respectively to the bulkheads and decks separating adjacent spaces.

(2) For determining the appropriate fire integrity standards to be applied to divisions between adjacent spaces, such spaces are classified according to their fire risk as shown in categories a) to k) below. Where the contents and use of a space are such that there is a doubt as to its classification for the purpose of this chapter, or where it is possible to assign two or more classifications to a space, it is to be treated as a space within the relevant category having the most stringent boundary requirements. Smaller, enclosed rooms within a space that have less than 30% communicating openings to that space are considered separate spaces. The fire integrity of the boundary bulkheads and decks of such smaller rooms are to be as prescribed in Table IX 7-5 and Table IX 7-6. The title of each category is intended to be typical rather than restrictive. The letter in parentheses preceding each category refers to the applicable column or row in the tables;

a) Control stations

Spaces containing emergency sources of power and lighting.

Wheelhouse and chartroom.

Spaces containing the ship's radio equipment.

Fire control stations.

Control room for propulsion machinery when located outside the machinery space.

Spaces containing centralized fire alarm equipment.

b) Corridors

corridors and lobbies.

c) Accommodation spaces

Spaces as defined in 1.5.1 of this Part, excluding corridors.

d) Stairways

Interior stairway, lifts, totally enclosed emergency escape trunks, and escalators (other than those wholly contained within the machinery spaces) and enclosures thereto.
In this connection, a stairway which is enclosed only at one level are to be regarded as part of the space from which it is not separated by a fire door.

e) Service spaces (low risk)

Lockers and store-rooms not having provisions for the storage of flammable liquids and having areas less than 4 m^2 and drying rooms and laundries.

f) Machinery spaces of category A

Spaces as defined in 1.5.31 of this Part.

g) Other machinery spaces

Electrical equipment rooms (auto-telephone exchange, air-conditioning duct spaces).
Spaces as defined in 1.5.30 of this Part excluding machinery spaces of category A.

h) Cargo spaces

All spaces used for cargo (including cargo oil tanks) and trunkways and hatchways to such spaces.

i) Service spaces (high risk)

Galleys, pantries containing cooking appliances, saunas, paint lockers and store-rooms having areas of 4 m^2 or more, spaces for the storage of flammable liquids, and workshops other than those forming part of the machinery spaces.

j) Open decks

Open deck spaces and enclosed promenades having little or no fire risk. To be considered in this category, enclosed promenades are to have no significant fire risk, meaning that furnishings are to be restricted to deck furniture. In addition, such spaces are to be naturally ventilated by permanent openings.
Air spaces (the space outside superstructures and deckhouses).

k) Ro-Ro and vehicle spaces

Ro-Ro spaces as defined in 1.5.41 of this Part.
Vehicle spaces as defined in 1.5.46 of this Part.

Table IX 7-5
Fire Integrity of Bulkheads Separating Adjacent Spaces

Space above→ / Space below ↓	a)	b)	c)	d)	e)	f)	g)	h)	i)	j)	k)
Control stations a)	A-0(5)	A-0	A-60	A-0	A-15	A-60	A-15	A-60	A-60	*	A-60
Corridors b)		C	B-0	B-0 A-0(3)	B-0	A-60	A-0	A-0	A-0	*	A-30
Accommodation spaces c)			C(1), (2)	B-0 A-0(3)	B-0	A-60	A-0	A-0	A-0	*	A-30
Stairways d)				B-0 A-0(3)	B-0 A-0(3)	A-60	A-0	A-0	A-0	* *	A-30
Service spaces (low risk) e)					C	A-60	A-0	A-0	A-0	*	A-0
Machinery spaces of category A f)						*	A-0	A-0(6)	A-60	*	A-60(6)
Other machinery spaces g)							A-0(4)	A-0	A-0	*	A-0
Cargo spaces h)								*	A-0	*	A-0
Service spaces (high risks) i)									A-0(4)	*	A-30
Open decks j)										-	A-0
Ro-ro and vehicle spaces k)											***A-30***

Table IX 7-6
Fire Integrity of Decks Separating Adjacent Space

Space above → / Space below↓	a)	b)	c)	d)	e)	f)	g)	h)	i)	j)	k)
Control stations a)	A-0	A-0	A-0	A-0	A-0	A-60	A-0	A-0	A-0	*	A-60
Corridors b)	A-0	*	*	A-0	*	A-60	A-0	A-0	A-0	*	A-30
Accommodation spaces c)	A-60	A-0	*	A-0	*	A-60	A-0	A-0	A-0	*	A-30
Stairways d)	A-0	A-0	A-0	*	A-0	A-60	A-0	A-0	A-0	*	A-30
Service spaces (low risk) e)	A-15	A-0	A-0	A-0	*	A-60	A-0	A-0	A-0	*	A-0
Machinery spaces of category A f)	A-60	A-60	A-60	A-60	A-60	*	A-60(8)	A-30	A-60	*	A-60
Other machinery spaces g)	A-15	A-0	A-0	A-0	A-0	A-0	*	A-0	A-0	*	A-0
Cargo spaces h)	A-60	A-0	A-0	A-0	A-0	A-0	A-0	*	A-0	*	A-0
Service spaces (high risks) i)	A-60	A-0	A-0	A-0	A-0	A-60	A-0	A-0	A-0(4)	*	A-30
Open decks j)	*	*	*	*	*	*	*	*	*	-	***A-0***
Ro-Ro and vehicle spaces k)	A-60	A-30	A-30	A-30	A-0	A-60	A-0	A-0	A-30	***A-0***	***A-30***

Notes: To be applied to Table IX 7-5 and Table IX 7-6 as appropriate.

(1) No special requirements are imposed upon bulkheads in methods IIC and IIIC fire protection.

(2) In case of method IIIC "B" class bulkheads of "B-0" rating are to be provided between spaces or groups of spaces of 50 m^2 and over in area.

(3) For clarification as to which applies, see paragraphs 7.1.3(b) and 7.1.3(d) of this Part.

(4) Where spaces are of the same category and superscript (4) appear, a bulkhead or deck of the rating shown in the tables is only required when the adjacent spaces are for a different purpose (e.g. in category i)). A galley next to a galley does not require a bulkhead but a galley next to a paint room requires an "A-0" bulkhead.

(5) Bulkheads separating the wheelhouse, chartroom and radio room from each other may have a "B-0" rating.

(6) An "A-0" rating may be used if no dangerous goods are intended to be carried or if such goods are stowed not less than 3 m horizontally from such a bulkhead.

(7) For cargo spaces in which dangerous goods are intended to be carried, 13.2.2(h) of this Part applies.

(8) Fire insulation need not be fitted if the machinery in category g) if, in the opinion of the Society, it has little or no fire risk.

* Where an asterisk appears in the tables, the division is required to be of steel or other equivalent material but is not required to be of "A" class standard. However, where a deck, except an open deck, is penetrated for the passage of electric cables, pipes and vent ducts, such penetrations are to be made tight to prevent the passage of flame and smoke. Divisions between control stations (emergency generators) and open decks may have air intake openings without means for closure, unless a fixed gas fire-fighting system is fitted.

(iii) Continuous "B" class ceilings or linings, in association with the relevant decks or bulkheads, may be accepted as contributing, wholly or in part, to the required insulation and integrity of a division.

(iv) External boundaries which are required in 9.1 of this Part to be of steel or other equivalent material may be pierced for the fitting of windows and sidescuttles provided that there is no requirement for such boundaries of cargo ships to have "A" class integrity. Similarly, in such boundaries which are not required to have "A" class integrity, doors may be constructed of materials which are to the satisfaction of the Society.

(v) Saunas are to comply with paragraph 7.1.2(c)(iv) of this Part.

(d) Protection of stairways and lift trunks in accommodation spaces, service spaces and control stations

(i) Stairways which penetrate only a single deck are to be protected, at a minimum, at one level by at least "B-0" class divisions and self-closing doors. Lifts which penetrate only a single deck are to be surrounded by "A-0" class divisions with steel doors at both levels. Stairways and lift trunks which penetrate more than a single deck are to be surrounded by at least "A-0" class divisions and be protected by selfclosing doors at all levels.

(ii) On ships having accommodation for 12 persons or less, where stairways penetrate more than a single deck and where there are at least two escape routes direct to the open deck at every accommodation level, the "A-0" requirements of 7.1.3(d)(i) of this Part may be reduced to "B-0".

7.1.4 Tankers

(a) Application

For tankers, only method IC as defined in paragraph 7.1.3(a)(i) of this Part are to be used.

(b) Fire integrity of bulkheads and decks

(i) In lieu of 7.1.3 of this Part and in addition to complying with the specific provisions for fire integrity of bulkheads and decks of tankers, the minimum fire integrity of bulkheads and decks are to be as prescribed in Table IX 7-7 and Table IX 7-8.

(ii) The following requirements are to govern application of the tables:

(1) Table IX 7-7 and Table IX 7-8 are to apply respectively to the bulkhead and decks separating adjacent spaces;

(2) For determining the appropriate fire integrity standards to be applied to divisions between adjacent spaces, such spaces are classified according to their fire risk as shown in categories a) to j) below. Where the contents and use of a space are such that there is a doubt as to its classification for the purpose of this Chapter, or where it is possible to assign two or more classifications to a space, it is to be treated as a space within the relevant category having the most stringent boundary requirements. Smaller, enclosed areas within a space that have less than 30% communicating openings to that space are considered separate areas. The fire integrity of the boundary bulkheads and decks of such smaller spaces are to be as prescribed in Table IX 7-7 and Table IX 7-8. The title of each category is intended to be typical rather than restrictive. The letter in parentheses preceding each category refers to the applicable column or row in the tables;

a) Control stations

Spaces containing emergency sources of power and lighting.

Wheelhouse and chartroom.

Spaces containing the ship's radio equipment.

Fire control stations.

Control room for propulsion machinery when located outside the machinery space.

Spaces containing centralized fire alarm equipment.

b) Corridors

Corridors and lobbies.

c) Accommodation spaces

Spaces as defined in 1.5.1 of this Part, excluding corridors.

d) Stairways

Interior stairways, lifts, totally enclosed emergency escape trunks, and escalators (other than those wholly contained within the machinery spaces) and enclosures thereto.

In this connection, a stairway which is enclosed only at one level are to be regarded as part of the space from which it is not separated by a fire door.

e) Service spaces (low risk)

Lockers and store-rooms not having provisions for the storage of flammable liquids and having areas less than 4 m^2 and drying rooms and laundries.

f) Machinery spaces of category A

Spaces as defined in 1.5.31 of this Part.

g) Other machinery spaces

Electrical equipment rooms (auto-telephone exchange and air-conditioning duct spaces).

Spaces as defined in 1.5.30 of this Part excluding machinery spaces of category A.

h) Cargo pump-rooms

Spaces containing cargo pumps and entrances and trunks to such spaces.

i) Service spaces (high risk)

Galleys, pantries containing cooking appliances, saunas, paint lockers and store-rooms having areas of 4 m^2 or more, spaces for the storage of flammable liquids and workshops other than those forming part of the machinery spaces.

j) Open decks

Open deck spaces and enclosed promenades having little or no fire risk. To be considered in this category, enclosed promenades are to have no significant fire risk, meaning that furnishings are to be restricted to deck furniture. In addition, such spaces are to be naturally ventilated by permanent openings.

Air spaces (the space outside superstructures and deckhouses).

(iii) Continuous "B" class ceilings or linings, in association with the relevant decks or bulkheads, may be accepted as contributing, wholly or in part, to the required insulation and integrity of a division.

(iv) External boundaries which are required in 9.1 of this Part to be of steel or other equivalent material may be pierced for the fitting of windows and sidescuttles provided that there is no requirement for such boundaries of tankers to have "A" class integrity. Similarly, in such boundaries which are not required to have "A" class integrity, doors may be constructed of materials which are to the satisfaction of the Society.

(v) Exterior boundaries of superstructures and deckhouses enclosing accommodation and including any overhanging decks which support such accommodation, are to be constructed of steel and insulated to "A-60" standard for the whole of the portions which face the cargo area and on the outward sides for a distance of 3 m from the end boundary facing the cargo area. The distance of 3 m are to be measured horizontally and parallel to the middle line of the ship from the boundary which faces the cargo area at each deck level. In the case of the sides of those superstructures and deckhouses, such insulation are to be carried up to the underside of the deck of the navigation bridge.

(vi) Skylights to cargo pump-rooms are to be of steel, are not to contain any glass and are to be capable of being closed from outside the pump-room.

(vii) Construction and arrangement of saunas are to comply with 7.1.2(c)(iv) of this Part.

Table IX 7-7
Fire Integrity of Bulkheads Separating Adjacent Spaces

Spaces		a)	b)	c)	d)	e)	f)	g)	h)	i)	j)
Control stations	a)	A-0(3)	A-0	A-60	A-0	A-15	A-60	A-15	A-60	A-60	*
Corridors	b)		C	B-0	B-0 A-0(1)	B-0	A-60	A-0	A-60	A-0	*
Accommodation spaces	c)			C	B-0 A-0(1)	B-0	A-60	A-0	A-60	A-0	*
Stairways	d)				B-0 A-0(1)	B-0 A-0(1)	A-60	A-0	A-60	A-0	*
Service spaces (low risk)	e)					C	A-60	A-0	A-60	A-0	*
Machinery spaces of category A	f)						*	A-0	A-0(4)	A-60	*
Other machinery spaces	g)							A-0(2)	A-0	A-0	*
Cargo pump-rooms	h)								*	A-60	*
Service spaces (high risk)	i)									A-0(2)	*
Open decks	j)										-

Table IX 7-8
Fire Integrity of Decks Separating Adjacent Spaces

Space below ↓	Spaces above →	a)	b)	c)	d)	e)	f)	g)	h)	i)	j)
Control stations	a)	A-0	A-0	A-0	A-0	A-0	A-60	A-0	-	A-0	*
Corridors	b)	A-0	*	*	A-0	*	A-60	A-0	-	A-0	*
Accommodation spaces	c)	A-60	A-0	*	A-0	*	A-60	A-0	-	A-0	*
Stairways	d)	A-0	A-0	A-0	*	A-0	A-60	A-0	-	A-0	*
Service spaces (low risk)	e)	A-15	A-0	A-0	A-0	*	A-60	A-0	-	A-0	*
Machinery spaces of category A	f)	A-60	A-60	A-60	A-60	A-60	*	A-60(5)	A-0	A-60	*
Other machinery spaces	g)	A-15	A-0	A-0	A-0	A-0	A-0	*	A-0	A-0	*
Cargo pump-rooms	h)	-	-	-	-	-	A-0(4)	A-0	*	-	*
Service spaces (high risk)	i)	A-60	A-0	A-0	A-0	A-0	A-60	A-0	-	A-0(2)	*
Open decks	j)	*	*	*	*	*	*	*	*	*	-

Notes: To be applied to Table IX 7-7 and Table IX 7-8 as appropriate.

(1) For clarification as to which applies, see paragraphs 7.1.3(b) and 7.1.3(d) of this Part.

(2) Where spaces are of the same category and superscript (2) appears, a bulkhead or deck of the rating shown in the tables is only required when the adjacent spaces are for a different purpose (e.g. in category i). A galley next to a galley does not require a bulkhead but a galley next to a paint room requires an "A-0" bulkhead.

(3) Bulkheads separating the wheelhouse, chartroom and radio room from each other may have a "B-0" rating.

(4) Bulkheads and decks between cargo pump-rooms and machinery spaces of category A may be penetrated by cargo pump shaft glands and similar gland penetrations, provided that gas tight seals with efficient lubrication or other means of ensuring the permanence of the gas seal are fitted in way of the bulkheads or deck.

(5) Fire insulation need not be fitted if the machinery space in category g) if, in the opinion of the Society, it has little or no fire risk.

* Where an asterisk appears in the table, the division is required to be of steel or other equivalent material, but is not required to be of "A" class standard. However, where a deck, except an open deck, is penetrated for the

passage of electric cables, pipes and vent ducts, such penetrations are to be made tight to prevent the passage of flame and smoke. Divisions between control stations (emergency generators) and open decks may have air intake openings without means for closure, unless a fixed gas fire-fighting system is fitted.

7.2 Penetration in Fire-Resisting Divisions and Prevention of Heat Transmission

7.2.1 Where "A" class divisions are penetrated, such penetrations are to be tested in accordance with the FTP Code, subject to the provisions of 7.3.1(a)(vi) of this Part. In the case of ventilation ducts, 7.6.1(b) and 7.6.3(a) of this Part apply. However, where a pipe penetration is made of steel or equivalent material having a thickness of 3 mm or greater and a length of not less than 900 mm (preferably 450 mm on each side of the division), and no openings, testing is not required. Such penetrations are to be suitably insulated by extension of the insulation at the same level of the division.

7.2.2 Where "B" class divisions are penetrated for the passage of electric cables, pipes, trunks, ducts, etc., or for the fitting of ventilation terminals, lighting fixtures and similar devices, arrangements are to be made to ensure that the fire resistance is not impaired, subject to the provisions of 7.6.3(b) of this Part. Pipes other than steel or copper that penetrate "B" class divisions are to be protected by either:

(a) a fire tested penetration device, suitable for the fire resistance of the division pierced and the type of pipe used; or

(b) a steel sleeve, having a thickness of not less than 1.8 mm and a length of not less than 900 mm for pipe diameters of 150 mm or more and not less than 600 mm for pipe diameters of less than 150 mm (preferably equally divided to each side of the division). The pipe are to be connected to the ends of the sleeve by flanges or couplings; or the clearance between the sleeve and the pipe are not to exceed 2.5 mm; or any clearance between pipe and sleeve are to be made tight by means of non-combustible or other suitable material.

7.2.3 Uninsulated metallic pipes penetrating "A" or "B" class divisions are to be of materials having a melting temperature which exceeds 950°C for "A-0" and 850°C for "B-0" class divisions.

7.2.4 In approving structural fire protection details, the Society are to have regard to the risk of heat transmission at intersections and terminal points of required thermal barriers. The insulation of a deck or bulkhead are to be carried past the penetration, intersection or terminal point for a distance of at least 450 mm in the case of steel and aluminium structures. If a space is divided with a deck or a bulkhead of "A" class standard having insulation of different values, the insulation with the higher value are to continue on the deck or bulkhead with the insulation of the lesser value for a distance of at least 450 mm.

7.3 Protection of Openings in Fire Resisting Divisions

7.3.1 Openings in bulkheads and decks in passenger ships

(a) Openings in "A" class divisions

(i) Except for hatches between cargo, special category, store, and baggage spaces, and between such spaces and the weather decks, openings are to be provided with permanently attached means of closing which are to be at least as effective for resisting fires as the divisions in which they are fitted.

(ii) The construction of doors and door frames in "A" class divisions, with the means of securing them when closed, are to provide resistance to fire as well as to the passage of smoke and flame equivalent to that of the bulkheads in which the doors are situated, this being determined in accordance with the FTP Code. Such doors and door frames are to be constructed of steel or other equivalent material. Doors approved without the sill being part of the frame, are to be installed such that the gap under the door does not exceed 12 mm. A non-combustible sill are to be installed under the door such that floor coverings do not extend beneath the closed door.

(iii) Watertight doors need not be insulated.

(iv) It is to be possible for each door to be opened and closed from each side of the bulkhead by one person only.

(v) Fire doors in main vertical zone bulkheads, galley boundaries and stairway enclosures other than power-operated watertight doors and those which are normally locked, are to satisfy the following requirements:

(1) the doors are to be self-closing and be capable of closing with an angle of inclination of up to 3.5° opposing closure;

(2) the approximate time of closure for hinged fire doors are to be no more than 40s and no less than 10s from the beginning of their movement with the ship in upright position. The approximate uniform rate of closure for sliding doors are to be of no more than 0.2 m/s and no less than 0.1 m/s with the ship in upright position;

(3) the doors, except those for emergency escape trunks, are to be capable of remote release from the continuously manned central control station, either simultaneously or in groups and are to be capable of release also individually from a position at both sides of the door. Release switches are to have an on-off function to prevent automatic resetting of the system;

(4) hold-back hooks not subject to central control station release are prohibited;

(5) a door closed remotely from the central control station are to be capable of being re-opened from both sides of the door by local control. After such local opening, the door are to automatically close again;

(6) indication must be provided at the fire door indicator panel in the continuously manned central control station whether each door is closed;

(7) the release mechanism are to be so designed that the door will automatically close in the event of disruption of the control system or central power supply;

(8) local power accumulators for power-operated doors are to be provided in the immediate vicinity of the doors to enable the doors to be operated after disruption of the control system or central power supply at least ten times (fully opened and closed) using the local controls;

(9) disruption of the control system or central power supply at one door are not to impair the safe functioning of the other doors;

(10) remote-released sliding or power-operated doors are to be equipped with an alarm that sounds at least 5 s but no more than 10 s after the door being released from the central control station and before the door begins to move and continues sounding until the door is completely closed;

(11) a door designed to re-open upon contacting an object in its path are to re-open not more than 1 m from the point of contact;

(12) double-leaf doors equipped with a latch necessary for their fire integrity are to have a latch that is automatically activated by the operation of the doors when released by the system;

(13) doors giving direct access to special category spaces which are power-operated and automatically closed need not be equipped with the alarms and remote-release mechanisms required in paragraphs 7.3.1(a)(v)(3) and 7.3.1(a)(v)(10) of this Part;

(14) the components of the local control system are to be accessible for maintenance and adjusting; satisfy the following requirements:

(15) power-operated doors are to be provided with a control system of an approved type which are to be able to operate in case of fire and be in accordance with the FTP Code. This system are to satisfy the following requirements:

a) the control system are to be able to operate the door at the temperature of at least 200°C for at least 60 min, served by the power supply;

b) the power supply for all other doors not subject to fire are not to be impaired; and

c) at temperatures exceeding 200°C the control system are to be automatically isolated from the power supply and are to be capable of keeping the door closed up to at least 945°C.

(vi) In ships carrying not more than 36 passengers, where a space is protected by an automatic sprinkler fire detection and alarm system complying with the provisions of the FSS Code or fitted with a continuous "B" class ceiling, openings in decks not forming steps in main vertical zones nor bounding horizontal zones are to be closed reasonably tight and such decks are to meet the "A" class integrity requirements in so far as is reasonable and practicable in the opinion of the Society.

(vii) The requirements for "A" class integrity of the outer boundaries of a ship are not to apply to glass partitions, windows and sidescuttles, provided that there is no requirement for such boundaries to

have "A" class integrity in 7.3.1(c)(iii) of this Part. The requirements for "A" class integrity of the outer boundaries of the ship are not to apply to exterior doors, except for those in superstructures and deckhouses facing lifesaving appliances, embarkation and external assembly station areas, external stairs and open decks used for escape routes. Stairway enclosure doors need not meet this requirement.

(viii) Except for watertight doors, weathertight doors (semi-watertight doors), doors leading to the open deck and doors which need to be reasonably gastight, all "A" class doors located in stairways, public spaces and main vertical zone bulkheads in escape routes are to be equipped with a self-closing hose port of material, construction and fire resistance which is equivalent to the door into which it is fitted, and are to be a 150 mm square clear opening with the door closed and are to be inset into the lower edge of the door, opposite the door hinges or, in the case of sliding doors, nearest the opening.

(ix) Where it is necessary that a ventilation duct passes through a main vertical zone division, a fail-safe automatic closing fire damper are to be fitted adjacent to the division. The damper are to also be capable of being manually closed from each side of the division. The operating position are to be readily accessible and be marked in red light-reflecting colour. The duct between the division and the damper are to be of steel or other equivalent material and, if necessary, insulated to comply with the requirements of 7.2.1 of this Part. The damper are to be fitted on at least one side of the division with a visible indicator showing whether the damper is in the open position.

(b) Openings in "B" class divisions

(i) Doors and door frames in "B" class divisions and means of securing them are to provide a method of closure which are to have resistance to fire equivalent to that of the divisions, this being determined in accordance with the FTP Code except that ventilation openings may be permitted in the lower portion of such doors. Where such opening is in or under a door the total net area of any such opening or openings are not to exceed 0.05 m^2. Alternatively, a non-combustible air balance duct routed between the cabin and the corridor, and located below the sanitary unit is permitted where the crosssectional area of the duct does not exceed 0.05 m^2. All ventilation openings are to be fitted with a grill made of non-combustible material. Doors are to be non-combustible. Doors approved without the sill being part of the frame are to be installed such that the gap under the door does not exceed 25 mm.

(ii) Cabin doors in "B" class divisions are to be of a self-closing type. Hold-back hooks are not permitted.

(iii) The requirements for "B" class integrity of the outer boundaries of a ship are not to apply to glass partitions, windows and sidescuttles. Similarly, the requirements for "B" class integrity are not to apply to exterior doors in superstructures and deckhouses. For ships carrying not more than 36 passengers, the Society may permit the use of combustible materials in doors separating cabins from the individual interior sanitary spaces such as showers.

(iv) In ships carrying not more than 36 passengers, where an automatic sprinkler system complying with the provisions of the FSS Code is fitted:

(1) openings in decks not forming steps in main vertical zones nor bounding horizontal zones are to be closed reasonably tight and such decks are to meet the "B" class integrity requirements in so far as is reasonable and practicable in the opinion of the Society; and

(2) openings in corridor bulkheads of "B" class materials are to be protected in accordance with the provisions of 7.1.2(b) of this Part.

(c) Windows and sidescuttles

(i) Windows and sidescuttles in bulkheads within accommodation and service spaces and control stations other than those to which the provisions of 7.3.1(a)(vi) and of 7.3.1(b)(iii) of this Part apply, are to be so constructed as to preserve the integrity requirements of the type of bulkheads in which they are fitted, this being determined in accordance with the FTP Code.

(ii) Notwithstanding the requirements of Table IX 7-1 to Table IX 7-4, windows and sidescuttles in bulkheads separating accommodation and service spaces and control stations from weather are to be constructed with frames of steel or other suitable material. The glass are to be retained by a metal glazing bead or angle.

(iii) Windows facing life-saving appliances, embarkation and assembly stations, external stairs and open decks used for escape routes, and windows situated below liferaft and escape slide embarkation areas

are to have fire integrity as required in Table IX 7-1. Windows located in the ship's side below the lifeboat embarkation area are to have fire integrity at least equal to "A-0" class. Where automatic dedicated sprinkler heads are provided for windows, "A-0" windows may be accepted as equivalent. To be considered under this paragraph, the sprinkler heads must either be:

(1) dedicated heads located above the windows, and installed in addition to the conventional ceiling sprinklers; or

(2) conventional ceiling sprinkler heads arranged such that the window is protected by an average application rate of at least 5 litres/min/m^2 and the additional window area is included in the calculation of the area of coverage; or

(3) water-mist nozzles that have been tested and approved in accordance with the guidelines approved by the IMO.*
* Refer to the Revised Guidelines for approval of sprinkler systems equivalent to that referred to in SOLAS regulation II-2/12 (resolution A.800(19), as may be amended).

7.3.2 Doors in fire-resisting divisions in cargo ships

(a) The fire resistance of doors are to be equivalent to that of the division in which they are fitted, this being determined in accordance with the FTP Code. Doors approved as "A" class without the sill being part of the frame are to be installed such that the gap under the door does not exceed 12 mm and a non-combustible sill are to be installed under the door such that floor coverings do not extend beneath the closed door. Doors approved as "B" class without the sill being part of the frame is to be installed such that the gap under the door does not exceed 25 mm. Doors and door frames in "A" class divisions are to be constructed of steel. Doors in "B" class divisions are to be non-combustible. Doors fitted in boundary bulkheads of machinery spaces of category A are to be reasonably gastight and self-closing. In ships constructed according to method IC, the Society may permit the use of combustible materials in doors separating cabins from individual interior sanitary accommodation such as showers.

(b) Doors required to be self-closing are not to be fitted with hold-back hooks. However, hold-back arrangements fitted with remote release devices of the fail-safe type may be utilized.

(c) In corridor bulkheads ventilation openings may be permitted in and under the doors of cabins and public spaces. Ventilation openings are also permitted in "B" class doors leading to lavatories, offices, pantries, lockers and store rooms. Except as permitted below, the openings are to be provided only in the lower half of a door. Where such an opening is in or under a door the total net area of any such opening or openings are not to exceed 0.05 m^2. Alternatively, a non-combustible air balance duct routed between the cabin and the corridor, and located below the sanitary unit is permitted where the cross-sectional area of the duct does not exceed 0.05 m^2. Ventilation openings, except those under the door, are to be fitted with a grille made of non-combustible material.

(d) Watertight doors need not be insulated.

7.4 Protection of Openings in Machinery Spaces Boundaries

7.4.1 Application

(a) The provision of this paragraph are to apply to machinery spaces of category A and, where the Society considers it desirable, to other machinery spaces.

7.4.2 Protection of openings in machinery space boundaries

(a) The number of skylights, doors, ventilators, openings in funnels to permit exhaust ventilation and other openings to machinery spaces are to be reduced to a minimum consistent with the needs of ventilation and the proper and safe working of the ship.

(b) Skylights are to be of steel and are not to contain glass panels.

(c) Means of control are to be provided for closing power-operated doors or actuating release mechanisms on doors other than power-operated watertight doors. The control are to be located outside the space concerned, where they will not be cut off in the event of fire in the space it serves.

(d) In passenger ships, the means of control required in paragraph 7.4.2(c) of this Part are to be situated at one control position or grouped in as few positions as possible to the satisfaction of the Society. Such positions are to have safe access from the open deck.

(e) In passenger ships, doors, other than power-operated watertight doors are to be so arranged that positive closure is assured in case of fire in the space by power-operated closing arrangements or by the provision of self-closing doors capable of closing against an inclination of 3.5° opposing closure, and having a fail-safe hold-back arrangement, provided with a remotely operated release device. Doors for emergency escape trunks need not be fitted with a fail-safe hold-back facility and a remotely operated release device.

(f) Windows are not to be fitted in machinery space boundaries. However, this does not preclude the use of glass in control rooms within the machinery spaces.

7.5 Protection of Cargo Space Boundaries

7.5.1 In passenger ships carrying more than 36 passengers, the boundary bulkheads and decks of special category and Ro-Ro spaces are to be insulated to "A-60" class standard. However, where a category e), i) and j) space, as defined in paragraph 7.1.2(c), is on one side of the division the standard may be reduced to "A-0". Where fuel oil tanks are below a special category space, the integrity of the deck between such spaces may be reduced to "A-0" standard.

7.5.2 In passenger ships, indicators are to be provided on the navigating bridge which are to indicate when any fire door leading to or from the special category spaces is closed.

7.5.3 In tankers, for the protection of cargo tanks carrying crude oil and petroleum products having a flashpoint not exceeding 60°C, materials readily rendered ineffective by heat are not to be used for valves, fittings, tank opening covers, cargo vent piping, and cargo piping so as to prevent the spread of fire to the cargo.

7.6 Ventilation Systems

7.6.1 General

(a) Ventilation ducts, including single and double wall ducts, are to be of steel or equivalent material except flexible bellows of short length not exceeding 600 mm used for connecting fans to the ducting in airconditioning rooms. Unless expressly provided otherwise in paragraph 7.6.1(f) of this Part, any other material used in the construction of ducts, including insulation, are to also be non-combustible. However, short ducts, not generally exceeding 2 m in length and with a free cross-sectional area* not exceeding 0.02 m^2, need not be of steel or equivalent material, subject to the following conditions:

* The term free cross-sectional area means, even in the case of a pre-insulated duct, the area calculated on the basis of the inner dimensions of the duct itself and not the insulation.

(i) the ducts are to be made of non-combustible material, which may be faced internally and externally with membranes having low flame-spread characteristics and, in each case, a calorific value** not exceeding 45 MJ/m^2 of their surface area for the thickness used;

** Refer to the recommendations published by the International Organization for Standardization, in particular publication ISO 1716:2002, Reaction to the fire tests for building products – Determination of the heat of combustion.

(ii) the ducts are only used at the end of the ventilation device; and

(iii) the ducts are not situated less than 600 mm, measured along the duct, from an opening in an "A" or "B" class division, including continuous "B" class ceiling.

(b) The following arrangements are to be tested in accordance with the FTP Code:

(i) fire dampers, including their relevant means of operation, however, the testing is not required for dampers located at the lower end of the duct in exhaust ducts for galley ranges, which must be of steel and capable of stopping the draught in the duct; and

(ii) duct penetrations through "A" class divisions. However, the test is not required where steel sleeves are directly joined to ventilation ducts by means of riveted or screwed connections or by welding.

(c) Fire dampers are to be easily accessible. Where they are placed behind ceilings or linings, these ceilings or linings are to be provided with an inspection hatch on which the identification number of the fire damper is marked. The fire damper identification number are to also be marked on any remote controls provided.

(d) Ventilation ducts are to be provided with hatches for inspection and cleaning. The hatches are to be located near the fire dampers.

(e) The main inlets and outlets of ventilation systems are to be capable of being closed from outside the spaces being ventilated. The means of closing are to be easily accessible as well as prominently and permanently marked and are to indicate the operating position of the closing device.

(f) Combustible gaskets in flanged ventilation duct connections are not permitted within 600 mm of openings in "A" or "B" class divisions and in ducts required to be of "A" class construction.

(g) Ventilation openings or air balance ducts between two enclosed spaces are not to be provided except as permitted by 7.3.1(b)(i) and 7.3.2(c) of this Part.

7.6.2 Arrangement of ducts

(a) The ventilation systems for machinery spaces of category A, vehicle spaces, Ro-Ro spaces, galleys, special category spaces and cargo spaces are to, in general, be separated from each other and from the ventilation systems serving other spaces. However, the galley ventilation systems on cargo ships of less than 4,000 gross tonnage and in passenger ships carrying not more than 36 passengers need not be completely separated from other ventilation systems, but may be served by separate ducts from a ventilation unit serving other spaces. In such a case, an automatic fire damper are to be fitted in the galley ventilation duct near the ventilation unit.

(b) Ducts provided for the ventilation of machinery spaces of category A, galleys, vehicle spaces, Ro-Ro spaces or special category spaces are not to pass through accommodation spaces, service spaces, or control stations unless they comply with paragraph 7.6.2(d) of this Part.

(c) Ducts provided for the ventilation of accommodation spaces, service spaces or control stations are not to pass through machinery spaces of category A, galleys, vehicle spaces, Ro-Ro spaces or special category spaces unless they comply with paragraph 7.6.2(d) of this Part.

(d) As permitted by paragraphs 7.6.2(b) and 7.6.2(c) of this Part ducts are to be either:

(i) constructed of steel having a thickness of at least 3 mm for ducts with a free cross-sectional area of less than 0.075 m^2, at least 4 mm for ducts with a free cross-sectional area of between 0.075 m^2 and 0.45 m^2, and at least 5 mm for ducts with a free cross-sectional area of over 0.45 m^2;

(ii) suitably supported and stiffened;

(iii) fitted with automatic fire dampers close to the boundaries penetrated; and

(iv) insulated to "A-60" class standard from the boundaries of the spaces they serve to a point at least 5 m beyond each fire damper; or

(v) constructed of steel in accordance with paragraphs 7.6.2(d)(i) and 7.6.2(d)(ii) of this Part; and

(vi) insulated to "A-60" class standard throughout the spaces they pass through, except for ducts that pass through spaces of category i) or j) as defined in paragraph 7.1.2(c)(ii)(2) of this Part.

(e) For the purposes of paragraphs 7.6.2(d)(iv) and 7.6.2(d)(vi) of this Part, ducts are to be insulated over their entire cross-sectional external surface. Ducts that are outside but adjacent to the specified space, and share one or more surfaces with it, are to be considered to pass through the specified space, and are to be insulated over the surface they share with the space for a distance of 450 mm past the duct.*

* Sketches of such arrangements are contained in the Unified Interpretations of SOLAS chapter II-2 (MSC.1/Circ.1276, as may be amended).

(f) Where it is necessary that a ventilation duct passes through a main vertical zone division, an automatic fire damper are to be fitted adjacent to the division. The damper are to also be capable of being manually closed from each side of the division. The control location are to be readily accessible and be clearly and prominently marked. The duct between the division and the damper are to be constructed of steel in accordance with paragraphs 7.6.2(d)(i) and 7.6.2(d)(ii) and insulated to at least the same fire integrity as the division penetrated. The damper are to be fitted on at least one side of the division with a visible indicator showing the operating position of the damper.

7.6.3 Details of fire dampers and duct penetrations

(a) Ducts passing through "A" class divisions are to meet the following requirements:

(i) where a thin plated duct with a free cross sectional area equal to, or less than, 0.02 m^2 passes through "A" class divisions, the opening are to be fitted with a steel sheet sleeve having a thickness of at least 3 mm and a length of at least 200 mm, divided preferably into 100 mm on each side of a bulkhead or, in the case of a deck, wholly laid on the lower side of the decks penetrated;

(ii) where ventilation ducts with a free cross-sectional area exceeding 0.02 m^2, but not more than 0.075 m^2, pass through "A" class divisions, the openings are to be lined with steel sheet sleeves. The ducts and sleeves are to have a thickness of at least 3 mm and a length of at least 900 mm. When passing through bulkheads, this length are to be divided preferably into 450 mm on each side of the bulkhead. These ducts, or sleeves lining such ducts, are to be provided with fire insulation. The insulation are to have at least the same fire integrity as the division through which the duct passes; and

(iii) automatic fire dampers are to be fitted in all ducts with a free cross-sectional area exceeding 0.075 m^2 that pass through "A" class divisions. Each damper are to be fitted close to the division penetrated and the duct between the damper and the division penetrated are to be constructed of steel in accordance with paragraphs 7.6.2(d)(v) and 7.6.2(d)(vi). The fire damper are to operate automatically, but are to also be capable of being closed manually from both sides of the division. The damper are to be fitted with a visible indicator which shows the operating position of the damper. Fire dampers are not required, however, where ducts pass through spaces surrounded by "A" class divisions, without serving those spaces, provided those ducts have the same fire integrity as the divisions which they penetrate. A duct of cross-sectional area exceeding 0.075 m^2 are not to be divided into smaller ducts at the penetration of an "A" class division and then recombined into the original duct once through the division to avoid installing the damper required by this provision.

(b) Ventilation ducts with a free cross-sectional area exceeding 0.02 m^2 passing through "B" class bulkheads are to be lined with steel sheet sleeves of 900 mm in length, divided preferably into 450 mm on each side of the bulkheads unless the duct is of steel for this length.

(c) All fire dampers are to be capable of manual operation. The dampers are to have a direct mechanical means of release or, alternatively, be closed by electrical, hydraulic, or pneumatic operation. All dampers are to be manually operable from both sides of the division. Automatic fire dampers, including those capable of remote operation, are to have a failsafe mechanism that will close the damper in a fire even upon loss of electrical power or hydraulic or pneumatic pressure loss. Remotely operated fire dampers are to be capable of being reopened manually at the damper.

7.6.4 Ventilation systems for passenger ships carrying more than 36 passengers

(a) In addition to the requirements in 7.6.1 to 7.6.3, the ventilation system of a passenger ship carrying more than 36 passengers are to also meet the following requirements.

(b) In general, the ventilation fans are to be so arranged that the ducts reaching the various spaces remain within a main vertical zone.

(c) Stairway enclosures are to be served by an independent ventilation fan and duct system (exhaust and supply) which are not to serve any other spaces in the ventilation systems.

(d) A duct, irrespective of its cross-section, serving more than one 'tween-deck accommodation space, service space or control station, are to be fitted, near the penetration of each deck of such spaces, with an automatic smoke damper that are to also be capable of being closed manually from the protected deck above the damper. Where a fan serves more than one 'tween-deck space through separate ducts within a main vertical zone, each dedicated to a single 'tween-deck space, each duct are to be provided with a manually operated smoke damper fitted close to the fan.

(e) Vertical ducts are to, if necessary, be insulated as required by Table IX 7-1 and Table IX 7.2. Ducts are to be insulated as required for decks between the space they serve and the space being considered, as applicable.

7.6.5 Exhaust ducts from galley ranges

(a) Requirements for passenger ships carrying more than 36 passengers

(i) In addition to the requirements in sections 7.6.1, 7.6.2 and 7.6.3, exhaust ducts from galley ranges are to be constructed in accordance with paragraphs 7.6.2(d)(v) and 7.6.2(d)(vi) and insulated to "A-60" class standard throughout accommodation spaces, service spaces, or control stations they pass through. They are to also be fitted with:

(1) a grease trap readily removable for cleaning unless an alternative approved grease removal system is fitted;

(2) a fire damper located in the lower end of the duct at the junction between the duct and the galley range hood which is automatically and remotely operated and, in addition, a remotely operated fire damper located in the upper end of the duct close to the outlet of the duct;

(3) a fixed means for extinguishing a fire within the duct;*
* Refer to the recommendations published by the International Organization for Standardization, in particular publication ISO 15371:2009, Ships and marine technology – Fire-extinguishing systems for protection of galley cooking equipment.

(4) remote-control arrangements for shutting off the exhaust fans and supply fans, for operating the fire dampers mentioned in paragraph 7.6.5(a)(i)(2) and for operating the fire-extinguishing system, which are to be placed in a position outside the galley close to the entrance to the galley. Where a multi-branch system is installed, a remote means located with the above controls are to be provided to close all branches exhausting through the same main duct before an extinguishing medium is released into the system; and

(5) suitably located hatches for inspection and cleaning, including one provided close to the exhaust fan and one fitted in the lower end where grease accumulates.

(ii) Exhaust ducts from ranges for cooking equipment installed on open decks are to conform to paragraph 7.6.5(a)(i), as applicable, when passing through accommodation spaces or spaces containing combustible materials.

(b) Requirements for cargo ships and passenger ships carrying not more than 36 passengers

When passing through accommodation spaces or spaces containing combustible materials, the exhaust ducts from galley ranges are to be constructed in accordance with paragraphs 7.6.2(d)(i) and 7.6.2(d)(ii). Each exhaust duct are to be fitted with:

(i) a grease trap readily removable for cleaning;

(ii) an automatically and remotely operated fire damper located in the lower end of the duct at the junction between the duct and the galley range hood and, in addition, a remotely operated fire damper in the upper end of the duct close to the outlet of the duct;

(iii) arrangements, operable from within the galley, for shutting off the exhaust and supply fans; and

(iv) fixed means for extinguishing a fire within the duct.*

* Refer to the recommendations published by the International Organization for Standardization, in particular publication ISO 15371:2009, Ships and marine technology – Fire-extinguishing systems for protection of galley cooking equipment.

7.6.6 Ventilation rooms serving machinery spaces of category A containing internal combustion machinery

(a) Where a ventilation room serves only such an adjacent machinery space and there is no fire division between the ventilation room and the machinery space, the means for closing the ventilation duct or ducts serving the machinery space are to be located outside of the ventilation room and machinery space.

(b) Where a ventilation room serves such a machinery space as well as other spaces and is separated from the machinery space by a "A-0" class division, including penetrations, the means for closing the ventilation duct or ducts for the machinery space can be located in the ventilation room.

7.6.7 Ventilation systems for laundries in passenger ships carrying more than 36 passengers

Exhaust ducts from laundries and drying rooms of category m) spaces as defined in paragraph 7.1.2(c)(ii)(2) are to be fitted with:

(a) filters readily removable for cleaning purposes;

(b) a fire damper located in the lower end of the duct which is automatically and remotely operated;

(c) remote-control arrangements for shutting off the exhaust fans and supply fans from within the space and for operating the fire damper mentioned in paragraph 7.6.7(b); and

(d) suitably located hatches for inspection and cleaning.

Chapter 8

Fire Fighting

8.1 Water Supply Systems

Ships shall be provided with fire pumps, fire mains, hydrants and hoses complying with the applicable requirements of this regulation.

8.1.1 Fire mains and hydrants

(a) General

Materials readily rendered ineffective by heat are not to be used for fire mains and hydrants unless adequately protected. The pipes and hydrants are to be so placed that the fire hoses may be easily coupled to them. The arrangement of pipes and hydrants are to be such as to avoid the possibility of freezing. Suitable drainage provisions are to be provided for fire main piping. Isolation valves are to be installed for all open deck fire main branches used for purposes other than fire fighting. In ships where deck cargo may be carried, the positions of the hydrants are to be such that they are always readily accessible and the pipes are to be arranged as far as practicable to avoid risk of damage by such cargo.

(b) Ready availability of water supply

The arrangements for the ready availability of water supply are to be:

(i) in passenger ships:

(1) of 1,000 gross tonnage and upwards such that at least one effective jet of water is immediately available from any hydrant in an interior location and so as to ensure the continuation of the output of water by the automatic starting of one required fire pump;

(2) of less than 1,000 gross tonnage by automatic start of at least one fire pump or by remote starting from the navigation bridge of at least one fire pump. If the pump starts automatically or if the bottom valve cannot be opened from where the pump is remotely started, the bottom valve are to always be kept open; and

(3) if fitted with periodically unattended machinery spaces, the Society are to determine provisions for fixed water fire-extinguishing arrangement for such spaces equivalent to those required for normally attended machinery spaces;

(ii) in cargo ships:

(1) to the satisfaction of the Society; and

(2) with a periodically unattended machinery space or when only one person is required on watch, there are to be immediate water delivery from the fire main system at a suitable pressure, either by remote starting of one of the main fire pumps with remote starting from the navigating bridge and fire control station, if any, or permanent pressurization of the fire main system by one of the main fire pumps, except that the Society may waive this requirement for cargo ships of less than 1,600 gross tonnage if the fire pump starting arrangement in the machinery space is in an easily accessible position.

(c) Diameter of fire mains

The diameter of the fire main and water service pipes are to be sufficient for the effective distribution of the maximum required discharge from two fire pumps operating simultaneously, except that in the case of cargo ships, other than those included in 8.6.3(b) of this Part, the diameter need only be sufficient for the discharge of 140 m^3/h.

(d) Isolating valves and relief valves

(i) Isolating valves to separate the section of the fire main within the machinery space containing the main fire pump or pumps from the rest of the fire main are to be fitted in an easily accessible and tenable position outside the machinery spaces. The fire main are to be so arranged that when the isolating valves are shut all the hydrants on the ship, except those in the machinery space referred to

above, can be supplied with water by another fire pump or an emergency fire pump. The emergency fire pump, its seawater inlet, and suction and delivery pipes and isolating valves are to be located outside the machinery space. If this arrangement cannot be made, the sea-chest may be fitted in the machinery space if the valve is remotely controlled from a position in the same compartment as the emergency pump and the suction pipe is as short as practicable. Short lengths of suction or discharge piping may penetrate the machinery space, provided they are enclosed in a substantial steel casing, or are insulated to A-60 class standards. The pipes are to have substantial wall thickness, but in no case less than 11 mm, and are to be welded except for the flanged connection to the sea inlet valve.

(ii) A valve are to be fitted to serve each fire hydrant so that any fire hose may be removed while the fire pumps are in operation.

(iii) Relief valves are to be provided in conjunction with fire pumps if the pumps are capable of developing a pressure exceeding the design pressure of the water service pipes, hydrants and hoses. These valves are to be so placed and adjusted as to prevent excessive pressure in any part of the fire main system.

(iv) In tankers, isolation valves are to be fitted in the fire main at poop front in a protected position and on the tank deck at intervals of not more than 40 m to preserve the integrity of the fire main system in case of fire or explosion.

(e) Number and position of hydrants

(i) The number and position of hydrants are to be such that at least two jets of water not emanating from the same hydrant, one of which is to be from a single length of hose, may reach any part of the ship normally accessible to the passengers or crew while the ship is being navigated and any part of any cargo space when empty, any Ro-Ro space or any vehicle space in which latter case the two jets are to reach any part of the space, each from a single length of hose. Furthermore, such hydrants are to be positioned near the accesses to the protected spaces.

(ii) In addition to the requirements in 8.1.1(e)(i), passenger ships are to comply with the following:

(1) in the accommodation, service and machinery spaces the number and position of hydrants are to be such that the requirements of 8.1.1(e)(i) may be complied with when all watertight doors and all doors in main vertical zone bulkheads are closed; and

(2) where access is provided to a machinery space of category A at a low level from an adjacent shaft tunnel, two hydrants are to be provided external to, but near the entrance to that machinery space. Where such access is provided from other spaces, in one of those spaces two hydrants are to be provided near the entrance to the machinery space of category A. Such provision need not be made where the tunnel or adjacent spaces are not part of the escape route.

(f) Pressure at hydrants

With the two pumps simultaneously delivering water through the nozzles specified in 8.1.3(c), with the quantity of water as specified in 8.1.1(c), through any adjacent hydrants, the following minimum pressures are to be maintained at all hydrants:

(i) for passenger ships:

4,000 gross tonnage and upwards	0.40 N/mm^2
less than 4000 gross tonnage	0.30 N/mm^2

(ii) for cargo ships,

6,000 gross tonnage and upwards	0.27 N/mm^2
less than 6,000 gross tonnage;	0.25 N/mm^2

(iii) the maximum pressure at any hydrant are not to exceed that at which the effective control of a fire hose can be demonstrated.

(g) International shore connection

(i) Ships of 500 gross tonnage and upwards are to be provided with at least one international shore connection complying with the FSS Code.

(ii) Facilities are to be available enabling such a connection to be used on either side of the ship.

8.1.2 Fire pumps

(a) Pumps accepted as fire pumps

Sanitary, ballast, bilge or general service pumps may be accepted as fire pumps, provided that they are not normally used for pumping oil and that if they are subject to occasional duty for the transfer or pumping of oil fuel, suitable change-over arrangements are fitted.

(b) Number of fire pumps

Ships are to be provided with independently driven fire pumps as follows:

(i) in passenger ships of:

4,000 gross tonnage and upwards	at least three
less than 4,000 gross tonnage	at least two

(ii) in cargo ships of:

1,000 gross tonnage and upwards	at least two
less than 1,000 gross tonnage	at least two power driven pumps, one of which is to be independently driven.

(c) Arrangement of fire pumps and fire mains

(i) Fire pumps

The arrangement of sea connections, fire pumps and their sources of power are to be as to ensure that:

(1) in passenger ships of l,000 gross tonnage and upwards, in the event of a fire in any one compartment all the fire pumps will not be put out of action; and

(2) in passenger ships of less than 1,000 gross tonnage and in cargo ships, if a fire in any one compartment could put all the pumps out of action, there are to be an alternative means consisting of an emergency fire pump complying with the provisions of the FSS Code with its source of power and sea connection located outside the space where the main fire pumps or their sources of power are located.

(ii) Requirements for the space containing the emergency fire pump

(1) Location of the space

The space containing the fire pump are not to be contiguous to the boundaries of machinery spaces of category A or those spaces containing main fire pumps. Where this is not practicable, the common bulkhead between the two spaces are to be insulated to a standard of structural fire protection equivalent to that required for a control station in 7.1.2(c) of this Part.

(2) Access to the emergency fire pump

No direct access are to be permitted between the machinery space and the space containing the emergency fire pump and its source of power. When this is impracticable, the Society may accept an arrangement where the access is by means of an airlock with the door of the machinery space being of A-60 class standard, and the other door being at least steel, both reasonably gastight, self-closing and without any hold back arrangements. Alternatively, the access may be through a watertight door capable of being operated from a space remote from the machinery space and the space containing the emergency fire pump and unlikely to be cut off in the event of fire in those spaces. In such cases, a second means of access to the space containing the emergency fire pump and its source of power are to be provided.

(3) Ventilation of the emergency fire pump space

Ventilation arrangements to the space containing the independent source of power for the emergency fire pump are to be such as to preclude, as far as practicable, the possibility of smoke from a machinery space fire entering or being drawn into that space.

(iii) Additional pumps for cargo ships

In addition, in cargo ships where other pumps, such as general service, bilge and ballast, etc., are fitted in a machinery space, arrangements are to be made to ensure that at least one of these pumps, having the capacity and pressure required by 8.1.1(f)(ii) and 8.1.2(d)(ii) of this Part, is capable of providing water to the fire main.

(d) Capacity of fire pumps

(i) Total capacity of required fire pumps

The required fire pumps are to be capable of delivering for fire-fighting purposes a quantity of water, at the pressure specified in 8.1.1(f) of this Part, as follows:

(1) pumps in passenger ships, the quantity of water is not less than two thirds of the quantity required to be dealt with by the bilge pumps when employed for bilge pumping; and

(2) pumps in cargo ships, other than any emergency pump, the quantity of water is not less than four thirds of the quantity required under 3.12 of Part VI of the Rules to be dealt with by each of the independent bilge pumps in a passenger ship of the same dimension when employed in bilge pumping, provided that in no cargo ship, other than those included in 8.6.3(b) of this Part, need the total required capacity of the fire pumps exceed 180 m^3/h.

(ii) Capacity of each fire pump

Each of the required fire pumps (other than any emergency pump required in 8.1.2(c)(i)(2) of this Part for cargo ships) are to have a capacity not less than 80% of the total required capacity divided by the minimum number of required fire pumps but in any case not less than 25 m^3/h and each such pump are to in any event be capable of delivering at least the two required jets of water. These fire pumps are to be capable of supplying the fire main system under the required conditions. Where more pumps than the minimum of required pumps are installed such additional pumps are to have a capacity of at least 25 m^3/h and are to be capable of delivering at least the two jets of water required in paragraph 8.1.1(e)(i) of this Part.

8.1.3 Fire hoses and nozzles

(a) General specifications

(i) Fire hoses are to be of non-perishable material approved by the Society and are to be sufficient in length to project a jet of water to any of the spaces in which they may be required to be used. Each hose are to be provided with a nozzle and the necessary couplings. Hoses specified in this chapter as "fire hoses" are to, together with any necessary fittings and tools, be kept ready for use in conspicuous positions near the water service hydrants or connections. Additionally, in interior locations in passenger ships carrying more than 36 passengers fire hoses are to be connected to the hydrants at all times. Fire hoses are to have a length of at least 10 m, but not more than:

(1) 15 m in machinery spaces;

(2) 20 m in other spaces and open decks; and

(3) 25 m for open decks on ships with a maximum breadth in excess of 30 m.

(ii) Unless one hose and nozzle is provided for each hydrant in the ship, there are to be complete interchangeability of hose couplings and nozzles.

(b) Number and diameter of fire hoses

(i) Ships are to be provided with fire hoses the number and diameter of which are to be to the satisfaction of the Society.

(ii) In passenger ships, there are to be at least one fire hose for each of the hydrants required by 8.1.1(e) of this Part and these hoses are to be used only for the purposes of extinguishing fires or testing the fire extinguishing apparatus at fire drills and surveys.

(iii) In cargo ships:

(1) of 1,000 gross tonnage and upwards, the number of fire hoses to be provided are to be one for each 30 m length of the ship and one spare but in no case less than five in all. This number does not include any hoses required in any engine or boiler room. The Society may increase the number of hoses required so as to ensure that hoses in sufficient number are available and accessible at all times, having regard to the type of ship and the nature of trade in which the ship is employed. Ships carrying dangerous goods in accordance with 13.2 of this Part are to be provided with 3 hoses and nozzles, in addition to those required above; and

(2) of less than 1,000 gross tonnage, the number of fire hoses to be provided are to be calculated in accordance with the provisions of 8.1.3(b)(iii)(1) of this Part. However, the number of hoses are to in no case be less than three.

(c) Size and types of nozzles

(i) For the purposes of this part, standard nozzle sizes are to be 12 mm, 16 mm and 19 mm or as near thereto as possible. Larger diameter nozzles may be permitted at the discretion of the Society.

(ii) For accommodation and service spaces, a nozzle size greater than 12 mm need not be used.

(iii) For machinery spaces and exterior locations, the nozzle size are to be such as to obtain the maximum discharge possible from two jets at the pressure mentioned in 8.1.1(f) of this Part from the smallest pump, provided that a nozzle size greater than 19 mm need not be used.

(iv) Nozzles are to be of an approved dual-purpose type (i.e., spray/jet type) incorporating a shutoff.

8.2 Portable Fire Extinguishers*

* Refer to the Improved Guidelines for Marine Portable Fire Extinguishers adopted by the IMO by resolution A.951(23), as may be amended, and Unified interpretation of SOLAS chapter II-2 on the number and arrangement of portable fire extinguishers on board ships (MSC.1/Circ.1275, as may be amended).

8.2.1 Type and design

Portable fire extinguishers are to comply with the requirements of the FSS Code.

8.2.2 Arrangement of fire extinguishers

(a) Accommodation spaces, service spaces and control stations are to be provided with portable fire extinguishers of appropriate types and in sufficient number to the satisfaction of the Society. Ships of 1,000 gross tonnage and upwards are to carry at least five portable fire extinguishers.

(b) One of the portable fire extinguishers intended for use in any space are to be stowed near the entrance to that space.

(c) Carbon dioxide fire extinguishers are not to be placed in accommodation spaces. In control stations and other spaces containing electrical or electronic equipment or appliances necessary for the safety of the ship, fire extinguishers are to be provided whose extinguishing media are neither electrically conductive nor harmful to the equipment and appliances.

(d) Fire extinguishers are to be situated ready for use at easily visible places, which can be reached quickly and easily at any time in the event of a fire, and in such a way that their serviceability is not impaired by the weather, vibration or other external factors. Portable fire extinguishers are to be provided with devices which indicate whether they have been used.

8.2.3 Spare charges

(a) Spare charges are to be provided for 100% of the first 10 extinguishers and 50% of the remaining fire extinguishers capable of being recharged on board. Not more than 60 total spare charges are required. Instructions for recharging are to be carried on board.

(b) For fire extinguishers which cannot be recharged onboard, additional portable fire extinguishers of the same quantity, type, capacity and number as determined in 8.2.3(a) of this Part above are to be provided in lieu of spare charges.

8.3 Fixed Fire-Extinguishing Systems

8.3.1 Types of fixed fire extinguishing systems

(a) A fixed fire extinguishing system required by 8.4 of this Part below may be any of the following systems:

(i) a fixed gas fire-extinguishing system complying with the provisions of the FSS Code;

(ii) a fixed high-expansion foam fire-extinguishing system complying with the provisions of the FSS Code; and

(iii) a fixed pressure water-spraying fire-extinguishing system complying with the provisions of the FSS Code.

(b) Where a fixed fire-extinguishing system not required by this chapter is installed, it is to meet the requirements of the relevant regulations of this part and the FSS Code.

(c) Fire-extinguishing systems using Halon 1211, 1301, and 2402 and perfluorocarbons are to be prohibited.

(d) In general, the Society are not to permit the use of steam as a fire-extinguishing medium in fixed fire-extinguishing systems. Where the use of steam is permitted by the Society, it is to be used only in restricted areas as an addition to the required fire-extinguishing system and are to comply with the requirements of the FSS Code.

8.3.2 Closing appliances for fixed gas fire-extinguishing systems

Where a fixed gas fire-extinguishing system is used, openings which may admit air to, or allow gas to escape from, a protected space are to be capable of being closed from outside the protected space.

8.3.3 Storage rooms of fire extinguishing medium

When the fire extinguishing medium is stored outside a protected space, it is to be stored in a room which is located behind the forward collision bulkhead, and is used for no other purposes. Any entrance to such a storage room are to preferably be from the open deck and are to be independent of the protected space. If the storage space is located below deck, it is to be located no more than one deck below the open deck and are to be directly accessible by a stairway or ladder from the open deck. Spaces which are located below deck or spaces where access from the open deck is not provided, are to be fitted with a mechanical ventilation system designed to take exhaust air from the bottom of the space and are to be sized to provide at least 6 air changes per hour. Access doors are to open outwards, and bulkheads and decks including doors and other means of closing any opening therein, which form the boundaries between such rooms and adjacent enclosed spaces are to be gastight. For the purpose of the application of Table IX 7-1 to 7-8, such storage rooms are to be treated as fire control stations.

8.3.4 Water pumps for other fire-extinguishing systems

Pumps, other than those serving the fire main, required for the provision of water for fire-extinguishing systems required by this part, their sources of power and their controls are to be installed outside the space or spaces protected by such systems and are to be so arranged that a fire in the space or spaces protected will not put any such system out of action.

8.4 Fire Extinguishing Arrangements in Machinery Spaces

8.4.1 Machinery spaces containing oil-fired boilers or oil fuel units

(a) Fixed fire-extinguishing systems

Machinery spaces of category A containing oil-fired boilers or oil fuel units are to be provided with any one of the fixed fire-extinguishing systems in 8.3.1 of this Part. In each case, if the engine and boiler rooms are not entirely separate, or if fuel oil can drain from the boiler room into the engine-room, the combined engine and boiler rooms are to be considered as one compartment.

(b) Additional fire-extinguishing arrangements*

* Refer to Unified Interpretation of SOLAS chapter II-2 on the number and arrangement of portable fire extinguishers on board ships (MSC.1/Circ.1275, as may be amended).

(i) There are to be in each boiler room or at an entrance outside of the boiler room at least one portable foam applicator unit complying with the provisions of the FSS Code.

(ii) There are to be at least two portable foam extinguishers or equivalent in each firing space in each boiler room and in each space in which a part of the oil fuel installation is situated. There are to be not less than one approved foam-type extinguisher of at least 135 litters capacity or equivalent in each boiler room. These extinguishers are to be provided with hoses on reels suitable for reaching any part of the boiler room. In the case of domestic boilers of less than 175 kW, or boilers protected by fixed water-based local application fire-extinguishing systems as required by 8.4.6 of this Part, an approved foam-type extinguisher of at least 135 litters capacity is not required.

(iii) In each firing space there are to be a receptacle containing at least 0.1 m^3 sand, sawdust impregnated with soda, or other approved dry material, along with a suitable shovel for spreading the material. An approved portable extinguisher may be substituted as an alternative.

8.4.2 Machinery spaces of category A containing internal combustion machinery

(a) Fixed fire-extinguishing systems

Machinery spaces of category A containing internal combustion machinery are to be provided with one of the fixed fire-extinguishing systems in 8.3.1 of this Part.

(b) Additional fire-extinguishing arrangements*

* Refer to Unified Interpretation of SOLAS chapter II-2 on the number and arrangement of portable fire extinguishers on board ships (MSC.1/Circ.1275, as may be amended).

(i) There is to be at least one portable foam applicator unit complying with the provisions of the FSS Code.

(ii) There are to be in each such spaces approved foam-type fire extinguishers, each of at least 45 litters capacity or equivalent, sufficient in number to enable foam or its equivalent to be directed on to any part of the fuel and lubricating oil pressure systems, gearing and other fire hazards. In addition, there are to be provided a sufficient number of portable foam extinguishers or equivalent which are to be so located that no point in the space is more than 10 m walking distance from an extinguisher and that there are at least two such extinguishers in each such spaces. For smaller spaces of cargo ships the Society may consider relaxing this requirement.

8.4.3 Machinery spaces containing steam turbines or enclosed steam engines

(a) Fixed fire-extinguishing systems

In spaces containing steam turbines or enclosed steam engines used for main propulsion or other purposes having in the aggregate a total output of not less than 375 kW, one of the fire-extinguishing systems specified in 8.3.1 of this Part are to be provided if such spaces are periodically unattended.

(b) Additional fire-extinguishing arrangements

(i) There are to be approved foam fire extinguishers each of at least 45 litters capacity or equivalent sufficient in number to enable foam or its equivalent to be directed on to any part of the pressure lubrication system, on to any part of the casings enclosing pressure lubricated parts of the turbines, engines or associated gearing, and any other fire hazards. However, such extinguishers are not to be required if protection, at least equivalent to that required by this subparagraph, is provided in such spaces by a fixed fire-extinguishing system fitted in compliance with 8.3.1 of this Part.

(ii) There are to be a sufficient number of portable foam extinguishers* or equivalent which are to be so located that no point in the space is more than 10 m walking distance from an extinguisher and that there are at least two such extinguishers in each such space, except that such extinguishers are not to be required in addition to any provided in compliance with 8.4.1(b)(ii) of this Part.

* Refer to Unified Interpretation of SOLAS chapter II-2 on the number and arrangement of portable fire extinguishers on board ships (MSC.1/Circ.1275, as may be amended).

8.4.4 Other machinery spaces

Where, in the opinion of the Society, a fire hazard exists in any machinery space for which no specific provisions for fire-extinguishing appliances are prescribed in 8.4.1, 8.4.2 and 8.4.3 of this Part, there are to be provided in, or adjacent to, that space such a number of approved portable fire extinguishers or other means of fire extinction as the Society may deem sufficient.

8.4.5 Additional requirements for passenger ships

In passenger ships carrying more than 36 passengers, each machinery space of category A are to be provided with at least two suitable water fog applicators*.

* A water fog applicator might consist of a metal L-shaped pipe, the long limb being about 2 m in length capable of being fitted to a fire hose and the short limb being about 250 mm in length fitted with a fixed water fog nozzle or capable of being fitted with a water spray nozzle.

8.4.6 Fixed local application fire-fighting systems

(a) Paragraph 8.4.6 is to apply to passenger ships of 500 gross tonnage and above and cargo ships of 2000 gross tonnage and above.

(b) Machinery spaces of category A above 500 m^3 in volume are to, in addition to the fixed fire-extinguishing system required in 8.4.1(a) of this Part, be protected by an approved type of fixed water-based or equivalent local application fire-fighting system, based on the guidelines developed by the IMO*. In the case of periodically unattended machinery spaces, the fire fighting system are to have both automatic and manual release capabilities. In the case of continuously manned machinery spaces, the fire-fighting system is only required to have a manual release capability.

* Refer to the Revised Guidelines for the approval of fixed water-based local application fire-fighting systems for use in category A machinery spaces (MSC/Circ.1387, as may be amended), Unified interpretations of the Guidelines for the approval of fixed water-based local application fire-fighting systems (MSC/Circ.1387, as may be amended) (MSC/Circ.1082, as may be amended) and Unified interpretations of SOLAS chapter II-2 (MSC.1/Circ.1276, as may be amended).

(c) Fixed local application fire-fighting systems are to protect areas such as the following without the necessity of engine shutdown, personnel evacuation, or sealing of the spaces:

(i) the fire hazard portions of internal combustion machinery;

(ii) boiler fronts;

(iii) the fire hazard portions of incinerators; and

(iv) purifiers for heated fuel oil.

(d) Activation of any local application system are to give a visual and distinct audible alarm in the protected space and at continuously manned stations. The alarm are to indicate the specific system activated. The system alarm requirements described within this paragraph are in addition to, and not a substitute for, the detection and fire alarm system required elsewhere in this part.

8.5 Fire Extinguishing Arrangements in Control Stations, Accommodation and Service Spaces

8.5.1 Sprinkler and water spray systems in passenger ships

(a) Passenger ships carrying more than 36 passengers are to be equipped with an automatic sprinkler, fire detection and fire alarm system of an approved type complying with the requirements of the FSS Code in all control stations, accommodation and service spaces, including corridors and stairways. Alternatively, control stations, where water may cause damage to essential equipment, may be fitted with an approved fixed fire-extinguishing system of another type. Spaces having little or no fire risk such as voids, public toilets, carbon dioxide rooms and similar spaces need not be fitted with an automatic sprinkler system.

(b) In passenger ships carrying not more than 36 passengers, when a fixed smoke detection and fire alarm system complying with the provisions of the FSS Code is provided only in corridors, stairways and escape routes within accommodation spaces, an automatic sprinkler system are to be installed in accordance with 5.4.3(b) of this Part.

(c) A fixed pressure water-spraying fire-extinguishing system complying with the provisions of the FSS Code is to be installed on cabin balconies of ships to which 3.2.4 of this Part applies, where furniture and furnishings on such balconies are not as defined in (a), (b), (c), (f) and (g) of 1.5.40 of this Part.

8.5.2 Sprinkler systems for cargo ships

In cargo ships in which Method IIC specified in 7.1.3(a)(i)(2) of this Part is adopted, an automatic sprinkler, fire detection and fire alarm system are to be fitted in accordance with the requirements in 5.4.5(b) of this Part.

8.5.3 Spaces containing flammable liquid

(a) Paint lockers are to be protected by:

(i) a carbon dioxide system, designed to give a minimum volume of free gas equal to 40% of the gross volume of the protected space;

(ii) a dry powder system, designed for at least 0.5 kg powder/m^3;

(iii) a water spraying or sprinkler system, designed for 5 litres/m^2 min. Water spraying systems may be connected to the fire main of the ship; or

(iv) a system providing equivalent protection, as determined by the Society. In any case, the system are to be operable from outside the protected space.

In any case, the system is to be operable from outside the protected space.

(b) Flammable liquid lockers are to be protected by an appropriate fire-extinguishing arrangement approved by the Society.

(c) For lockers of a deck area of less than 4 m^2, which do not give access to accommodation spaces, a carbon dioxide portable fire extinguisher sized to provide a minimum volume of free gas equal to 40% of the gross volume of the space may be accepted in lieu of a fixed system. A discharge port are to be arranged in the locker to allow the discharge of the extinguisher without having to enter into the protected space. The required portable fire extinguisher are to be stowed adjacent to the port. Alternatively, a port or hose connection may be provided to facilitate the use of fire main water.

8.5.4 Deep-fat cooking equipment

Deep-fat cooking equipment installed in enclosed spaces or on open decks is to be fitted with the following:

(a) an automatic or manual extinguishing system tested to an international standard acceptable to the IMO;*

* Refer to the recommendations by the International Organization for Standardization, in particular, Publication ISO15371:2009, Ships and marine technology - Fire-extinguishing systems for protection of galley cooking equipment.

* Refer to MSC.1/Circ.1433 "Unified Interpretations of SOLAS Regulation II-2/10.6.4 and Chapter 9 of the FSS Code", as may be amended.

(b) a primary and backup thermostat with an alarm to alert the operator in the event of failure of either thermostat;

(c) arrangements for automatically shutting off the electrical power upon activation of the extinguishing system;

(d) an alarm for indicating operation of the extinguishing system in the galley where the equipment is installed; and

(e) controls for manual operation of the extinguishing system which are clearly labelled for ready use by the crew.

8.6 Fire Extinguishing Arrangements in Cargo Spaces

8.6.1 Fixed gas fire-extinguishing systems for general cargo

(a) Except as provided for in 8.6.2 of this Part, the cargo spaces of passenger ships of 1,000 gross tonnage and upwards are to be protected by a fixed carbon dioxide or inert gas fire-extinguishing system complying with the provisions of the FSS Code or by a fixed high expansion foam fire-extinguishing system which gives equivalent protection.

(b) Where it is shown to the satisfaction of the Society that a passenger ship is engaged on voyages of such short duration that it would be unreasonable to apply the requirements of 8.6.1(a) of this Part and also in ships of less than 1,000 gross tonnage, the arrangements in cargo spaces are to be to the satisfaction of the Society, provided that the ship is fitted with steel hatch covers and effective means of closing all ventilators and other openings leading to the cargo spaces.

(c) Except for Ro-Ro and vehicle spaces, cargo spaces on cargo ships of 2,000 gross tonnage and upwards are to be protected by a fixed carbon dioxide or inert gas fire-extinguishing system complying with the provisions of the FSS Code, or by a fire-extinguishing system which gives equivalent protection.

(d) The Society may exempt from the requirements of 8.6.1(c) and 8.6.2 of this Part, cargo spaces of any cargo ship if constructed, and solely intended for, the carriage of ore, coal, grain, unseasoned timber, non-combustible cargoes or cargoes which, in the opinion of the Society, constitute a low fire risk*. Such exemptions may be granted only if the ship is fitted with steel hatch covers and effective means of closing ventilators and other openings leading to the cargo spaces. In this case, a list of cargoes intended to be carried is to be submitted to the Society for approval.

* Refer to the International Maritime Solid Bulk Cargoes (IMSBC) Code, adopted by the IMO by resolution MSC.268(85), as amended, appendix 1, entry for coal, and to the Lists of solid bulk cargoes for which a fixed gas fire-extinguishing system may be exempted or for which a fixed gas fire-extinguishing system is ineffective (MSC.1/Circ.1395/Rev.3, as may be amended)

8.6.2 Fixed gas fire-extinguishing systems for dangerous goods

A ship engaged in the carriage of dangerous goods in any cargo spaces are to be provided with a fixed carbon dioxide or inert gas fire-extinguishing system complying with the provisions of the FSS Code or with a fire-extinguishing system which, in the opinion of the Society, gives equivalent protection for the cargoes carried.

8.6.3 Firefighting for ships designed to carry containers on or above the weather deck

(a) Ships are to carry, in addition to the equipment and arrangements required by 8.1 of this Part, at least one water mist lance.

(i) The water mist lance are to consist of a tube with a piercing nozzle which is capable of penetrating a container wall and producing water mist inside a confined space (container, etc.) when connected to the fire main.

(b) Ships designed to carry five or more tiers of containers on or above the weather deck are to carry, in addition to the requirements of paragraph 8.6.3(a) of this Part, mobile water monitors* as follows:

* Refer to the Guidelines for the design, performance, testing and approval of mobile water monitors used for the protection of on-deck cargo areas of ships designed and constructed to carry five or more tiers of containers on or above the weather deck (MSC.1/Circ.1472, as may be amended).

- ships with breadth less than 30 m: at least two mobile water monitors; or
- ships with breadth of 30 m or more: at least four mobile water monitors.

(i) The mobile water monitors, all necessary hoses, fittings and required fixing hardware are to be kept ready for use in a location outside the cargo space area not likely to be cut-off in the event of a fire in the cargo spaces.

(ii) A sufficient number of fire hydrants are to be provided such that:

(1) all provided mobile water monitors can be operated simultaneously for creating effective water barriers forward and aft of each container bay;

(2) the two jets of water required by 8.1.1(e)(i) of this Part can be supplied at the pressure required by 8.1.1(f) of this Part; and

(3) each of the required mobile water monitors can be supplied by separate hydrants at the pressure necessary to reach the top tier of containers on deck.

(iii) The mobile water monitors may be supplied by the fire main, provided the capacity of fire pumps and fire main diameter are adequate to simultaneously operate the mobile water monitors and two jets of water from fire hoses at the required pressure values. If carrying dangerous goods, the capacity of fire pumps and fire main diameter are to also comply with 13.2.2(a)(v) of this Part, as far as applicable to on-deck cargo areas.

(iv) The operational performance of each mobile water monitor are to be tested during initial survey on board the ship to the satisfaction of the Society. The test are to verify that:

(1) the mobile water monitor can be securely fixed to the ship structure ensuring safe and effective operation; and

(2) the mobile water monitor jet reaches the top tier of containers with all required monitors and water jets from fire hoses operated simultaneously.

8.7 Cargo Tank Protection

8.7.1 Fixed deck foam systems

(a) For tankers of 20,000 tonnes deadweight and upwards, a fixed deck foam system are to be provided in accordance with the requirements of the FSS Code, except that, in lieu of the above, the Society, after having given consideration to the ship's arrangement and equipment, may accept other fixed installations if they afford protection equivalent to the above. The requirements for alternative fixed installations are to comply with the requirements in 8.7.1(b) of this Part.

(b) In accordance with 8.7.1(a) of this Part, where the Society accepts an equivalent fixed installation in lieu of the fixed deck foam system, the installation are to:

(i) be capable of extinguishing spill fires and also preclude ignition of spilled oil not yet ignited; and

(ii) be capable of combating fires in ruptured tanks.

(c) Tankers of less than 20,000 tonnes deadweight are to be provided with a deck foam system complying with the requirements of the FSS Code.

8.8 Protection of Cargo Pump Rooms

8.8.1 Fixed fire-extinguishing systems

Each cargo pump-room are to be provided with one of the following fixed fire-extinguishing systems operated from a readily accessible position outside the pump-room. Cargo pump-rooms are to be provided with a system suitable for machinery spaces of category A.

(a) A carbon dioxide system complying with the provisions the FSS Code and with the following:

(i) the alarms giving audible warning of the release of fire-extinguishing medium are to be safe for use in a flammable cargo vapour/air mixture; and

(ii) a notice are to be exhibited at the controls stating that due to the electrostatic ignition hazard, the system is to be used only for fire extinguishing and not for inerting purposes.

(b) A high-expansion foam system complying with the provisions of the FSS Code, provided that the foam concentrate supply is suitable for extinguishing fires involving the cargoes carried.

(c) A fixed pressure water-spraying system complying with the provisions of the FSS Code.

8.8.2 Quantity of fire-extinguishing medium

Where the extinguishing medium used in the cargo pump-room system is also used in systems serving other spaces, the quantity of medium provided or its delivery rate need not be more than the maximum required for the largest compartment.

8.9 Fire-Fighter's Outfits

8.9.1 Types of fire-fighter's outfits

(a) Fire-fighter's outfits are to comply with the FSS Code; and

(b) Self-contained compressed air breathing apparatus of fire-fighter's outfits is to comply with paragraph 2.1.2.2 of chapter 3 of the FSS Code by 1 July 2019.

8.9.2 Number of fire-fighter's outfits

(a) Ships are to carry at least two fire-fighter's outfits.

(b) In addition, in passenger ships there are to be provided:

(i) for every 80 m, or part thereof, of the aggregate of the lengths of all passenger spaces and service spaces on the deck which carries such spaces or, if there is more than one such deck, on the deck which has the largest aggregate of such lengths, two fire-fighter's outfits and, in addition, two sets of personal equipment, each set comprising the items stipulated in the FSS Code. In passenger ships carrying more than 36 passengers, two additional fire-fighter's outfits are to be provided for each main vertical zone. However, for stairway enclosures which constitute individual main vertical zones and for the main vertical zones in the fore or aft end of a ship which do not contain spaces of categories f), g), h) or l) defined in 7.1.2(c) of this Part, no additional fire-fighter's outfits are required; and

(ii) ships carrying more than 36 passengers, for each pair of breathing apparatus there are to be provided one water fog applicator which are to be stored adjacent to such apparatus.

(c) In addition, in tankers, two fire-fighter's outfits are to be provided.

(d) The Society may require additional sets of personal equipment and breathing apparatus, having due regard to the size and type of the ship.

(e) Two spare charges are to be provided for each required breathing apparatus. Passenger ships carrying not more than 36 passengers and cargo ships that are equipped with suitably located means for fully recharging the air cylinders free from contamination, need carry only one spare charge for each required apparatus. In passenger ships carrying more than 36 passengers, at least two spare charges for each breathing apparatus are to be provided.

(f) Passenger ships carrying more than 36 passengers are to be fitted with a suitably located means for fully recharging breathing air cylinders, free from contamination. The means for recharging are to be either:

(i) breathing air compressors supplied from the main and emergency switchboard, or independently driven, with a minimum capacity of 60 litters /min per required breathing apparatus, not to exceed 420 litters /min; or

(ii) self-contained high-pressure storage systems of suitable pressure to recharge the breathing apparatus used on board, with a capacity of at least 1,200 litters per required breathing apparatus, not to exceed 50,000 litters of free air.

8.9.3 Storage of fire-fighter's outfits

(a) The fire-fighter's outfits or sets of personal equipment are to be kept ready for use in an easily accessible location that is permanently and clearly marked and, where more than one fire-fighter's outfit or more than one set of personal equipment is carried, they are to be stored in widely separated positions.

(b) In passenger ships, at least two fire-fighter's outfits and, in addition, one set of personal equipment is to be available at any one position. At least two fire-fighter's outfits are to be stored in each main vertical zone.

8.9.4 Fire-fighter's communication

A minimum of two two-way portable radiotelephone apparatus for each fire party for fire-fighter's communication are to be carried on board. Those two-way portable radiotelephone apparatus are to be of an explosion-proof type or intrinsically safe.

Chapter 9

Structural Integrity

9.1 Material of Hull, Superstructures, Structural Bulkheads, Decks and Deckhouses

The hull, superstructures, structural bulkheads, decks and deckhouses are to be constructed of steel or other equivalent material. For the purpose of applying the definition of steel or other equivalent material as given in 1.5.43 of this Part the "applicable fire exposure" are to be according to the integrity and insulation standards given in Table IX 7-1 to Table IX 7-4. For example, where divisions such as decks or sides and ends of deckhouses are permitted to have "B-0" fire integrity, the applicable fire exposure are to be half an hour.

9.2 Structure of Aluminium Alloy

9.2.1 Unless otherwise specified in 9.1 above, in cases where any part of the structure is of aluminium alloy, the following are to apply:

(a) the insulation of aluminium alloy components of "A" or "B" class divisions, except structure which, in the opinion of the Society, is non-load-bearing, are to be such that the temperature of the structural core does not rise more than 200°C above the ambient temperature at any time during the applicable fire exposure to the standard fire test; and

(b) special attention are to be given to the insulation of aluminium alloy components of columns, stanchions and other structural members required to support lifeboat and liferaft stowage, launching and embarkation areas, and "A" and "B" class divisions to ensure:

(i) that for such members supporting lifeboat and liferaft areas and "A" class divisions, the temperature rise limitation specified in 9.2.1(a) above are to apply at the end of one hour; and

(ii) that for such members required to support "B" class divisions, the temperature rise limitation specified in 9.2.1(a) above are to apply at the end of half an hour.

9.3 Machinery Spaces of Category A

9.3.1 Crowns and casings

Crowns and casings of machinery spaces of category A are to be of steel construction and are to be insulated as required by Table IX 7-5 and Table IX 7-7, as appropriate.

9.3.2 Floor plating

The floor plating of normal passageways in machinery spaces of category A are to be made of steel.

9.4 Materials of Overboard Fittings

Materials readily rendered ineffective by heat are not to be used for overboard scuppers, sanitary discharges, and other outlets which are close to the waterline and where the failure of the material in the event of fire would give rise to danger of flooding.

9.5 Protection of Cargo Tank Structure Against Pressure or Vacuum in Tankers

9.5.1 General

The venting arrangements are to be so designed and operated as to ensure that neither pressure nor vacuum in cargo tanks are to exceed design parameters and be such as to provide for:

(a) the flow of the small volumes of vapour, air or inert gas mixtures caused by thermal variations in a cargo tank in all cases through pressure/vacuum valves; and

(b) the passage of large volumes of vapour, air or inert gas mixtures during cargo loading and ballasting, or during discharging.

9.5.2 Openings for small flow by thermal variations

Openings for pressure release required by 9.5.1(a) above are to:

(a) have as great a height as is practicable above the cargo tank deck to obtain maximum dispersal of flammable vapours, but in no case less than 2 m above the cargo tank deck; and

(b) be arranged at the furthest distance practicable but not less than 5 m from the nearest air intakes and openings to enclosed spaces containing a source of ignition and from deck machinery and equipment which may constitute an ignition hazard. Anchor windlass and chain locker openings constitute an ignition hazard.

For tankers, the openings are to be arranged in accordance with 2.4.3(d)(i) of this Part.

9.5.3 Safety measures in cargo tanks

(a) Preventive measures against liquid rising in the venting system

Provisions are to be made to guard against liquid rising in the venting system to a height which would exceed the design head of cargo tanks. This is to be accomplished by high-level alarms or overflow control systems or other equivalent means, together with independent gauging devices and cargo tank filling procedures. For the purposes of this Chapter, spill valves are not considered equivalent to an overflow system.

(b) Secondary means for pressure/vacuum relief

A secondary means of allowing full flow relief of vapour, air or inert gas mixtures to prevent over-pressure or under-pressure in the event of failure of the arrangements in 9.5.1(b) above is required. In addition, for tankers, the secondary means is to be capable of preventing over-pressure or under-pressure in the event of damage to, or inadvertent closing of, the means of isolation required in 2.4.3(b)(ii) of this part. Alternatively, pressure sensors may be fitted in each tank protected by the arrangement required in 9.5.1(b) above, with a monitoring system in the ship's cargo control room or the position from which cargo operations are normally carried out. Such monitoring equipment are to also provide an alarm facility which is activated by detection of over-pressure or under-pressure conditions within a tank.

(c) Bypasses in vent mains

Pressure/vacuum valves required by 9.5.1(a) above may be provided with a bypass arrangement when they are located in a vent main or masthead riser. Where such an arrangement is provided there are to be suitable indicators to show whether the bypass is open or closed.

(d) Pressure/vacuum-breaking devices

One or more pressure/vacuum-breaking devices are to be provided to prevent the cargo tanks from being subject to:

(i) a positive pressure, in excess of the test pressure of the cargo tank, if the cargo were to be loaded at the maximum rated capacity and all other outlets are left shut; and

(ii) a negative pressure in excess of 700 mm water gauge if cargo were to be discharged at the maximum rated capacity of the cargo pumps and the inert gas blowers were to fail.

Such devices are to be installed on the inert gas main unless they are installed in the venting system required by 2.4.3(a) of this Part or on individual cargo tanks. The location and design of the devices are to be in accordance with 2.4.3 and 9.5 of this Part.

9.5.4 Size of vent outlets

Vent outlets for cargo loading, discharging and ballasting required by 9.5.1(b) above are to be designed on the basis of the maximum designed loading rate multiplied by a factor of at least 1.25 to take account of gas evolution, in order to prevent the pressure in any cargo tank from exceeding the design pressure. The master are to be provided with information regarding the maximum permissible loading rate for each cargo tank and in the case of combined venting systems, for each group of cargo tanks.

Chapter 10

Escape

10.1 Notification of Crew and Passengers

10.1.1 General emergency alarm system

A general emergency alarm system required by 2.5.7 of Part VII of the Rules are to be used for notifying crew and passengers of a fire.

10.1.2 Public address systems in passenger ships

A public address system or other effective means of communication complying with the requirements of 2.5.11 of Part VII of the Rules are to be available throughout the accommodation and service spaces and control stations and open decks.

10.2 Means of Escape

10.2.1 General requirements

(a) Unless expressly provided otherwise in this section, at least two widely separated and ready means of escape are to be provided from all spaces or group of spaces.

(b) Lifts are not to be considered as forming one of the means of escape as required by this Section.

10.2.2 Means of escape from control stations, accommodation and service spaces

(a) General requirements

(i) Stairways and ladders are to be so arranged as to provide ready means of escape to the lifeboat and liferaft embarkation deck from passenger and crew accommodation spaces and from spaces in which the crew is normally employed, other than machinery spaces.

(ii) Unless expressly provided otherwise in this Section, a corridor, lobby, or part of a corridor from which there is only one route of escape are to be prohibited. Dead-end corridors used in service areas which are necessary for the practical utility of the ship, such as fuel oil stations and athwartship supply corridors, are to be permitted, provided such dead-end corridors are separated from crew accommodation areas and are inaccessible from passenger accommodation areas. Also, a part of a corridor that has a depth not exceeding its width is considered a recess or local extension and is permitted.

(iii) All stairways in accommodation and service spaces and control stations are to be of steel frame construction except where the Society sanctions the use of other equivalent material.

(iv) If a radiotelegraph station has no direct access to the open deck, two means of escape from or access to, the station are to be provided, one of which may be a porthole or window of sufficient size or other means to the satisfaction of the Society.

(v) Doors in escape routes are to, in general, open in way of the direction of escape, except that:

(1) individual cabin doors may open into the cabins in order to avoid injury to persons inthe corridor when the door is opened; and

(2) doors in vertical emergency escape trunks may open out of the trunk in order to permit the trunk to be used both for escape and for access.

(b) Means of escape in passenger ships

(i) Escape from spaces below the bulkhead deck

(1) Below the bulkhead deck two means of escape, at least one of which are to be independent of watertight doors, are to be provided from each watertight compartment or similarly restricted space or group of spaces. Exceptionally, the Society may dispense with one of the means of

escape for crew spaces that are entered only occasionally, if the required escape route is independent of watertight doors.

(2) Where the Society has granted dispensation under the provisions of 10.2.2(b)(i)(1) of this Part, this sole means of escape is to provide safe escape. However, stairways are not to be less than 800 mm in clear width with handrails on both sides.

(ii) Escape from spaces above the bulkhead deck

Above the bulkhead deck there are to be at least two means of escape from each main vertical zone or similarly restricted space or group of spaces at least one of which are to give access to a stairway forming a vertical escape.

(iii) Direct access to stairway enclosures

Stairway enclosures in accommodation and service spaces are to have direct access from the corridors and be of a sufficient area to prevent congestion, having in view the number of persons likely to use them in an emergency. Within the perimeter of such stairway enclosures, only public toilets, lockers of non-combustible material providing storage for non-hazardous safety equipment and open information counters are permitted. Only corridors, lifts, public toilets, special category spaces and open Ro-Ro spaces to which any passengers carried can have access, other escape stairways required by paragraph 10.2.2(b)(iv)(1) of this Part and external areas are permitted to have direct access to these stairway enclosures. Public spaces may also have direct access to stairway enclosures except for the backstage of a theatre. Small corridors or "lobbies" used to separate an enclosed stairway from galleys or main laundries may have direct access to the stairway provided they have a minimum deck area of 4.5 m^2, a width of no less than 900 mm and contain a fire hose station.

(iv) Details of means of escape

(1) At least one of the means of escape required by 10.2.2(b)(i)(1) and 10.2.2(b)(ii) of this Part are to consist of a readily accessible enclosed stairway, which are to provide continuous fire shelter from the level of its origin to the appropriate lifeboat and liferaft embarkation decks, or to the uppermost weather deck if the embarkation deck does not extend to the main vertical zone being considered. In the latter case, direct access to the embarkation deck by way of external open stairways and passageways are to be provided and are to have emergency lighting in accordance with 11.2.4(b) of Part VII of the Rules and slip-free surfaces underfoot. Boundaries facing external open stairways and passageways forming part of an escape route and boundaries in such a position that their failure during a fire would impede escape to the embarkation deck are to have fire integrity, including insulation values, in accordance with Table IX 7-1 to Table IX 7-4, as appropriate.

(2) Protection of access from the stairway enclosures to the lifeboat and liferaft embarkation areas are to be provided either directly or through protected internal routes which have fire integrity and insulation values for stairway enclosures as determined by Table IX 7-1 to Table IX 7-4, as appropriate.

(3) Stairways serving only a space and a balcony in that space are not to be considered as forming one of the required means of escape.

(4) Each level within an atrium are to have two means of escape, one of which are to give direct access to an enclosed vertical means of escape meeting the requirements of 10.2.2(b)(iv)(1) of this Part.

(5) The widths, number and continuity of escapes are to be in accordance with the requirements in the FSS Code.

(v) Marking of escape routes

(1) In addition to the emergency lighting required by 11.2.4(b) of Part VII, the means of escape, including stairways and exits, are to be marked by lighting or photoluminescent strip indicators placed not more than 300 mm above the deck at all points of the escape route including angles and intersections. The marking must enable passengers to identify the routes of escape and readily identify the escape exits. If electric illumination is used, it is to be supplied by the emergency source of power and it is to be so arranged that the failure of any single light or cut in a lighting strip will not result in the marking being ineffective. Additionally, escape route signs and fire equipment location markings are to be of photoluminescent material or marked by lighting. The Society are to ensure that such lighting or photoluminescent equipment has been evaluated, tested and applied in accordance with the FSS Code.

(2) In passenger ships carrying more than 36 passengers, the requirements of the paragraph 10.2.2(b)(v)(1) of this Part are to also apply to the crew accommodation areas.

(3) In lieu of the escape route lighting system required by 10.2.2(b)(v)(1) of this Part, alternative evacuation guidance systems may be accepted if approved by the Society based on the guidelines developed by the IMO*.

* Refer to the Functional requirements and performance standards for the assessment of evacuation guidance systems (MSC/Circ.1167, as may be amended) and the Interim guidelines for the testing, approval and maintenance of evacuation guidance systems used as an alternative to low-location lighting systems (MSC/Circ.1168, as may be amended).

(vi) Normally locked doors that form part of an escape route

(1) Cabin and stateroom doors are not to require keys to unlock them from inside the room. Neither are to there be any doors along any designated escape route which require keys to unlock them when moving in the direction of escape.

(2) Escape doors from public spaces that are normally latched are to be fitted with a means of quick release. Such means are to consist of a door-latching mechanism incorporating a device that releases the latch upon the application of a force in the direction of escape flow. Quick release mechanisms are to be designed and installed to the satisfaction of the Society and, in particular:

a) consist of bars or panels, the actuating portion of which extends across at least one half of the width of the door leaf, at least 760 mm and not more than 1120 mm above the deck;

b) cause the latch to release when a force not exceeding 67 N is applied; and

c) not be equipped with any locking device, set screw or other arrangement that prevents the release of the latch when pressure is applied to the releasing device.

(vii) Evacuation analysis for passenger ships*

* Refer to the Revised Guidelines on evacuation analyses for new and existing passenger ships (MSC.1/Circ.1533), as may be amended.

(1) Escape routes are to be evaluated by an evacuation analysis early in the design process. This analysis is to apply to:

a) Ro-Ro passenger ships; and

b) other passenger ships constructed on or after 1 January 2020 carrying more than 36 passengers.

(2) The analysis is to be used to identify and eliminate, as far as practicable, congestion which may develop during an abandonment, due to normal movement of passengers and crew along escape routes, including the possibility that crew may need to move along these routes in a direction opposite to the movement of passengers. In addition, the analysis is to be used to demonstrate that escape arrangements are sufficiently flexible to provide for the possibility that certain escape routes, assembly stations, embarkation stations or survival craft may not be available as a result of a casualty.

(c) Means of escape in cargo ships

(i) General

At all levels of accommodation there are to be provided at least two widely separated means of escape from each restricted space or group of spaces.

(ii) Escape from spaces below the lowest open deck

Below the lowest open deck the main means of escape are to be a stairway and the second escape may be a trunk or a stairway.

(iii) Escape from spaces above the lowest open deck

Above the lowest open deck the means of escape are to be stairways or doors to an open deck or a combination thereof.

(iv) Dead-end corridors

No dead-end corridors having a length of more than 7 m are to be accepted.

(v) Width and continuity of escape routes

The width, number and continuity of escape routes are to be in accordance with the requirements in the FSS Code.

(vi) Dispensation from two means of escape

Exceptionally the Society may dispense with one of the means of escape, for crew spaces that are entered only occasionally, if the required escape route is independent of watertight doors.

(d) Emergency escape breathing devices*

* Refer to the Guidelines for the performance, location, use and care of emergency escape breathing devices (MSC/Circ.849, as may be amended).

(i) Emergency escape breathing devices are to comply with the FSS Code. Spare emergency escape breathing devices are to be kept onboard.

(ii) All ships are to carry at least two emergency escape breathing devices within accommodation spaces.

(iii) In passenger ships, at least two emergency escape breathing devices are to be carried in each main vertical zone.

(iv) In passenger ships carrying more than 36 passengers, two emergency escape breathing devices, in addition to those required in 10.2.2(d)(iii) above, are to be carried in each main vertical zone.

(v) However, 10.2.2(d)(iii) and 10.2.2(d)(iv) above do not apply to stairway enclosures which constitute individual main vertical zones and for the main vertical zones in the fore or aft end of a ship which do not contain spaces of categories f), g), h) or l) defined in 7.1.2(c) of this Part.

10.2.3 Means of escape from machinery spaces

(a) Means of escape on passenger ships

Means of escape from each machinery space in passenger ships are to comply with the following provisions.

(i) Escape from spaces below the bulkhead deck

Where the space is below the bulkhead deck the two means of escape are to consist of either:

(1) two sets of steel ladders as widely separated as possible, leading to doors in the upper part of the space similarly separated and from which access is provided to the appropriate lifeboat and liferaft embarkation decks. One of these ladders are to be located within a protected enclosure that satisfies 7.1.2(c) of this Part, category b), or 7.1.2(d) of this Part, category d), as appropriate, from the lower part of the space it serves to a safe position outside the space. Self-closing fire doors of the same fire integrity standards are to be fitted in the enclosure. The ladder are to be fixed in such a way that heat is not transferred into the enclosure through non-insulated fixing points. The protected enclosure are to have minimum internal dimensions of at least 800 mm × 800 mm, and are to have emergency lighting provisions; or

(2) one steel ladder leading to a door in the upper part of the space from which access is provided to the embarkation deck and additionally, in the lower part of the space and in a position well separated from the ladder referred to, a steel door capable of being operated from each side and which provides access to a safe escape route from the lower part of the space to the embarkation deck.

(ii) Escape from spaces above the bulkhead deck

Where the space is above the bulkhead deck, the two means of escape are to be as widely separated as possible and the doors leading from such means of escape are to be in a position from which access is provided to the appropriate lifeboat and liferaft embarkation decks. Where such means of escape require the use of ladders, these are to be of steel.

(iii) Dispensation from two means of escape

In a ship of less than 1,000 gross tonnage, the Society may dispense with one of the means of escape, due regard being paid to the width and disposition of the upper part of the space. In a ship of 1,000 gross tonnage and above, the Society may dispense with one means of escape from any such space, including a normally unattended auxiliary machinery space, so long as either a door or a steel ladder provides a safe escape route to the embarkation deck, due regard being paid to the nature and location of the space and whether persons are normally employed in that space. In the steering gear space, a second means of escape are to be provided when the emergency steering position is located in that space unless there is direct access to the open deck.

(iv) Escape from machinery control rooms

Two means of escape are to be provided from a machinery control room located within a machinery space, at least one of which will provide continuous fire shelter to a safe position outside the machinery space.

(v) Inclined ladders and stairways

All inclined ladders/stairways fitted to comply with 10.2.3(a)(i) of this Part with open treads in machinery spaces being part of or providing access to escape routes but not located within a protected enclosure are to be made of steel. Such ladders/stairways are to be fitted with steel shields attached to their undersides, such as to provide escaping personnel protection against heat and flame from beneath.

(vi) Escape from main workshops within machinery spaces

Two means of escape are to be provided from the main workshop within a machinery space. At least one of these escape routes is to provide a continuous fire shelter to a safe position outside the machinery space.

(b) Means of escape of cargo ships

Means of escape from each machinery space in cargo ships are to comply with the following provisions.

(i) Escape from machinery spaces of category A

Except as provided in 10.2.3(b)(ii) of this Part, two means of escape are to be provided from each machinery space of category A. In particular, one of the following provisions are to be complied with:

(1) two sets of steel ladders as widely separated as possible leading to doors in the upper part of the space similarly separated and from which access is provided to the open deck. One of these ladders are to be located within a protected enclosure that satisfies 7.1.3(c) of this Part, category d), from the lower part of the space it serves to a safe position outside the space. Self-closing fire doors of the same fire integrity standards are to be fitted in the enclosure. The ladder are to be fixed in such a way that heat is not transferred into the enclosure through non-insulated fixing points. The enclosure are to have minimum internal dimensions of at least 800 mm × 800 mm, and are to have emergency lighting provisions; or

(2) one steel ladder leading to a door in the upper part of the space from which access is provided to the open deck and, additionally, in the lower part of the space and in a position well separated from the ladder referred to, a steel door capable of being operated from each side and which provides access to a safe escape route from the lower part of the space to the open deck.

(ii) Dispensation from two means of escape

In a ship of less than 1,000 gross tonnage, the Society may dispense with one of the means of escape required under 10.2.3(b)(i) of this Part, due regard being paid to the dimension and disposition of the upper part of the space. In addition, the means of escape from machinery spaces of category A need not comply with the requirement for an enclosed fire shelter listed in 10.2.3(b)(i)(1) of this Part. In the steering gear space, a second means of escape are to be provided when the emergency steering position is located in that space unless there is direct access to the open deck.

(iii) Escape from machinery spaces other than those of category A

From machinery spaces other than those of category A, two escape routes are to be provided except that a single escape route may be accepted for spaces that are entered only occasionally, and for spaces where the maximum travel distance to the door is 5 m or less.

(iv) Inclined ladders and stairways

All inclined ladders/stairways fitted to comply with 10.2.3(b)(i) of this Part with open treads in machinery spaces being part of or providing access to escape routes but not located within a protected enclosure are to be made of steel. Such ladders/stairways are to be fitted with steel shields attached to their undersides, such as to provide escaping personnel protection against heat and flame from beneath.

(v) Escape from machinery control rooms in machinery spaces of category "A"

Two means of escape are to be provided from the machinery control room located within a machinery space. At least one of these escape routes is to provide a continuous fire shelter to a safe position outside the machinery space.

(vi) Escape from main workshops in machinery spaces of category "A"

Two means of escape are to be provided from the main workshop within a machinery space. At least one of these escape routes are to provide a continuous fire shelter to a safe position outside the machinery space.

(c) Emergency escape breathing devices*

* Refer to the Guidelines for the performance, location, use and care of emergency escape breathing devices (MSC/Circ.849, as may be amended).

(i) On all ships, within the machinery spaces, emergency escape breathing devices are to be situated ready for use at easily visible places, which can be reached quickly and easily at any time in the event of fire. The location of emergency escape breathing devices are to take into account the layout of the machinery space and the number of persons normally working in the spaces.

(ii) The number and location of these devices are to be indicated in the fire control plan required in 11.2.2(d) of this Part.

(iii) Emergency escape breathing devices are to comply with the FSS Code.

10.2.4 Means of escape on passenger ships from special category and open Ro-Ro spaces to which any passengers carried can have access

(a) In special category and open Ro-Ro spaces to which any passengers carried can have access, the number and locations of the means of escape both below and above the bulkhead deck are to be to the satisfaction of the Society and, in general, the safety of access to the embarkation deck are to be at least equivalent to that provided for under 10.2.2(b)(i)(1), 10.2.2(b)(ii), 10.2.2(b)(iv)(1) and 10.2.2(b)(iv)(2) of this Part. Such spaces are to be provided with designated walkways to the means of escape with a breadth of at least 600 mm. The parking arrangements for the vehicles are to maintain the walkways clear at all times.

(b) One of the escape routes from the machinery spaces where the crew is normally employed are to avoid direct access to any special category space.

10.2.5 Means of escape from Ro-Ro spaces

At least two means of escape are to be provided in Ro-Ro spaces where the crew are normally employed. The escape routes are to provide a safe escape to the lifeboat and liferaft embarkation decks and are to be located at the fore and aft ends of the space.

10.2.6 Additional requirements for Ro-Ro passenger ships

(a) General

(i) Escape routes are to be provided from every normally occupied space on the ship to an assembly station. These escape routes are to be arranged so as to provide the most direct route possible to the assembly station*, and are to be marked with symbols based on the guidelines developed by the IMO.**

* Refer to the Indication of the "assembly stations" in passenger ships (MSC/Circ.777, as may be amended)

** Refer to the Symbols related to lifesaving appliances and arrangements adopted by the IMO by resolution A.760(18), as amended by resolution MSC.82(70), as may be amended.

(ii) The escape route from cabins to stairway enclosures are to be as direct as possible, with a minimum number of changes in direction. It is not to be necessary to cross from one side of the ship to the other to reach an escape route. It is not to be necessary to climb more than two decks up or down in order to reach an assembly station or open deck from any passenger space.

(iii) External routes are to be provided from open decks, as referred to in 10.2.6(a)(ii) of this Part, to the survival craft embarkation stations.

(iv) Where enclosed spaces adjoin an open deck, openings from the enclosed space to the open deck are to, where practicable, be capable of being used as an emergency exit.

(v) Escape routes are not to be obstructed by furniture and other obstructions. With the exception of tables and chairs which may be cleared to provide open space, cabinets and other heavy furnishings

in public spaces and along escape routes are to be secured in place to prevent shifting if the ship rolls or lists. Floor coverings are to also be secured in place. When the ship is underway, escape routes are to be kept clear of obstructions such as cleaning carts, bedding, luggage and boxes of goods.

(b) Instruction for safe escape

(i) Decks are to be sequentially numbered, starting with "1" at the tank top or lowest deck. The numbers are to be prominently displayed at stair landings and lift lobbies. Decks may also be named, but the deck number are to always be displayed with the name.

(ii) Simple "mimic" plans showing the "you are here" position and escape routes marked by arrows, are to be prominently displayed on the inside of each cabin door and in public spaces. The plan are to show the directions of escape and are to be properly oriented in relation to its position on the ship.

(c) Strength of handrails and corridors

(i) Handrails or other handholds are to be provided in corridors along the entire escape route so that a firm handhold is available at every step of the way, where possible, to the assembly stations and embarkation stations. Such handrails are to be provided on both sides of longitudinal corridors more than 1.8 m in width and transverse corridors more than 1 m in width. Particular attention are to be paid to the need to be able to cross lobbies, atriums and other large open spaces along escape routes. Handrails and other handholds are to be of such strength as to withstand a distributed horizontal load of 750 N/m applied in the direction of the centre of the corridor or space, and a distributed vertical load of 750 N/m applied in the downward direction. The two loads need not be applied simultaneously.

(ii) The lowest 0.5 m of bulkheads and other partitions forming vertical divisions along escape routes are to be able to sustain a load of 750 N/m to allow them to be used as walking surfaces from the side of the escape route with the ship at large angles of heel.

Chapter 11
Operational Requirements

11.1 Operational Readiness and Maintenance

11.1.1 General requirements

At all times while the ship is in service, fire protection systems and fire-fighting systems and appliances are to be maintained ready for use, including properly tested and inspected. A ship is not in service when:

(a) it is in for repairs or lay-up (either at anchor or in port) or in dry-dock;

(b) it is declared not in service by the owner or the owner's representative; and

(c) in the case of passenger ships, there are no passengers on board.

11.1.2 Operational readiness

(a) The following fire protection systems are to be kept in good order so as to ensure their required performance if a fire occurs:
   (i) structural fire protection including fire resisting divisions, and protection of openings and penetrations in these divisions;
   (ii) fire detection and fire alarm systems; and
   (iii) means of escape systems and appliances.

(b) Fire-fighting systems and appliances are to be kept in good working order and readily available for immediate use. Portable extinguishers which have been discharged are to be immediately recharged or replaced with an equivalent unit.

11.1.3 Maintenance, testing and inspections

(a) Maintenance, testing and inspections are to be carried out based on the guidelines developed by the IMO* and in a manner having due regard to ensuring the reliability of fire-fighting systems and appliances.

   *Refer to the Revised Guidelines for the maintenance and inspection of fire protection systems and appliances (MSC/Circ.1432, as may be amended).

(b) The maintenance plan are to be kept on board the ship and are to be available for inspection whenever required by the Society.

(c) The maintenance plan are to include at least the following fire protection systems and fire-fighting systems and appliances, where installed:
   (i) fire mains, fire pumps and hydrants including hoses, nozzles and international shore connections;
   (ii) fixed fire detection and fire alarm systems;
   (iii) fixed fire-extinguishing systems and other fire extinguishing appliances;
   (iv) automatic sprinkler, fire detection and fire alarm systems;
   (v) ventilation systems including fire and smoke dampers, fans and their controls;
   (vi) emergency shut down of fuel supply;
   (vii) fire doors including their controls;
   (viii) general emergency alarm systems;
   (ix) emergency escape breathing devices;
   (x) portable fire extinguishers including spare charges; and
   (xi) fire-fighter's outfits.

(d) The maintenance programme may be computer-based.

11.1.4 Additional requirements for passenger ships

In addition to the fire protection systems and appliances listed in 11.1.3(c) above, ships carrying more than 36 passengers are to develop a maintenance plan for low-location lighting and public address systems.

11.1.5 Additional requirements for tankers

In addition to the fire protection systems and appliances listed in 11.1.3(c) above, tankers are to develop a maintenance plan for:

(a) inert gas systems;

(b) deck foam systems;

(c) fire safety arrangements in cargo pump rooms; and

(d) flammable gas detectors.

11.2 Instructions, Onboard Training and Drills

11.2.1 The requirements of onboard training and drills are to be in accordance with SOLAS II-2 Reg. 15.2.2.

11.2.2 Training Manuals

(a) A training manual are to be provided in each crew mess room and recreation room or in each crew cabin.

(b) The training manual are to be written in the working language of the ship.

(c) The training manual, which may comprise several volumes, are to contain the instructions and information required in 11.2.2(d) below in easily understood terms and illustrated wherever possible. Any part of such information may be provided in the form of audio-visual aides in lieu of the manual.

(d) The training manual are to explain the following in detail:

(i) general fire safety practice and precautions related to the dangers of smoking, electrical hazards, flammable liquids and similar common shipboard hazards;

(ii) general instructions on fire-fighting activities and fire-fighting procedures including procedures for notification of a fire and use of manually operated call points;

(iii) meanings of the ship's alarms;

(iv) operation and use of fire-fighting systems and appliances;

(v) operation and use of fire doors;

(vi) operation and use of fire and smoke dampers; and

(vii) escape systems and appliances.

11.2.3 Fire control plans*

* Refer to the Graphical symbols for fire control plans as adopted by the IMO by resolution A.952(23) as may be amended.

(a) General arrangement plans are to be permanently exhibited for the guidance of the ship's officers, showing clearly for each deck the control stations, the various fire sections enclosed by "A" class divisions, the sections enclosed by "B" class divisions together with particulars of the fire detection and fire alarm systems, the sprinkler installation, the fire-extinguishing appliances, means of access to different compartments, decks, etc., and the ventilating system including particulars of the fan control positions, the position of dampers and identification numbers of the ventilating fans serving each section. Alternatively, at the discretion of the Society, the aforementioned details may be set out in a booklet, a copy of which are to be supplied to each officer, and one copy are to at all times be available on board in an accessible position. Plans and booklets are to be kept up to date; any alterations thereto are to be recorded as soon as practicable. Description in such plans and booklets are to be in the language or languages required by the Society. If the language is neither English nor French, a translation into one of those languages are to be included.

(b) A duplicate set of fire control plans or a booklet containing such plans are to be permanently stored in a prominently marked weathertight enclosure outside the deckhouse for the assistance of shore-side firefighting personnel.*

* Refer to the Guidance concerning the location of fire control plans for assistance of shoreside fire-fighting personnel (MSC/Circ.451, as may be amended).

11.2.4 Additional requirements for passenger ships

(a) Fire control plans

In ships carrying more than 36 passengers, plans and booklets required by this section are to provide information regarding fire protection, fire detection and fire extinction based on the guidelines issued by the IMO.*

* Refer to the Guidelines on the information to be provided with fire control plans and booklets required by SOLAS regulations II-2/20 and 41-2 adopted by the IMO by resolution A.756(18), as may be amended.

11.3 Fire Safety Operational Booklets

11.3.1 Fire safety operational booklets

(a) The required fire safety operational booklet are to contain the necessary information and instructions for the safe operation of the ship and cargo handling operations in relation to fire safety. The booklet are to include information concerning the crew's responsibilities for the general fire safety of the ship while loading and discharging cargo and while underway. Necessary fire safety precautions for handling general cargoes are to be explained. For ships carrying dangerous goods and flammable bulk cargoes, the fire safety operational booklet are to also provide reference to the pertinent fire-fighting and emergency cargo handling instructions contained in the International Maritime Solid Bulk Cargoes Code (hereinafter referred to as the IMSBC Code), the IBC Code, the IGC Code and the IMDG Code, as appropriate.

(b) The fire safety operational booklet are to be provided in each crew mess room and recreation room or in each crew cabin.

(c) The fire safety operational booklet are to be written in the working language of the ship.

(d) The fire safety operational booklet may be combined with the training manuals required in 11.2.2 of this Part.

11.3.2 Additional requirements for tankers

(a) General

The fire safety operational booklet referred to in 11.3.1 above are to include provisions for preventing fire spread to the cargo area due to ignition of flammable vapours and include procedures of cargo tank gaspurging and/or gas-freeing taking into account the provisions in 11.3.2(b) as follows.

(b) Procedures for cargo tank purging and/or gas-freeing

(i) When the ship is provided with an inert gas system, the cargo tanks are to first be purged in accordance with the provisions of 2.4.6 of this Part until the concentration of hydrocarbon vapours in the cargo tanks has been reduced to less than 2% by volume. Thereafter, gas-freeing may take place at the cargo tank deck level.

(ii) When the ship is not provided with an inert gas system, the operation is to be such that the flammable vapour is discharged initially through:

(1) the vent outlets as specified in 2.4.3(d) of this Part;

(2) outlets at least 2 m above the cargo tank deck level with a vertical efflux velocity of at least 30 m/s maintained during the gas-freeing operation; or

(3) outlets at least 2 m above the cargo tank deck level with a vertical efflux velocity of at least 20 m/s and which are protected by suitable devices to prevent the passage of flame.

(iii) The above outlets are to be located not less than 10 m measured horizontally from the nearest air intakes and openings to enclosed spaces containing a source of ignition and from deck machinery, which may include anchor windlass and chain locker openings, and equipment which may constitute an ignition hazard.

(iv) When the flammable vapour concentration at the outlet has been reduced to 30% of the lower flammable limit, gas-freeing may be continued at cargo tank deck level.

(c) Operation of inert gas system

(i) The inert gas system for tankers required in accordance with 2.4.5(a) of this Part are to be so operated as to render and maintain the atmosphere of the cargo tanks non-flammable, except when such tanks are required to be gas-free.

(ii) Notwithstanding the above, for chemical tankers, the application of inert gas, may take place after the cargo tank has been loaded, but before commencement of unloading and are to continue to be applied until that cargo tank has been purged of all flammable vapours before gas-freeing. Only nitrogen is acceptable as inert gas under this provision.

(iii) For tankers, if the oxygen content of the inert gas exceeds 5% by volume, immediate action are to be taken to improve the gas quality. Unless the quality of the gas improves, all operations in those cargo tanks to which inert gas is being supplied are to be suspended so as to avoid air being drawn into the cargo tanks, the gas regulating valve, if fitted, are to be closed and the off-specification gas are to be vented to atmosphere.

(iv) In the event that the inert gas system is unable to meet the requirement in 11.3.2(c)(i) and it has been assessed that it is impractical to effect a repair, then cargo discharge and cleaning of those cargo tanks requiring inerting are to only be resumed when suitable emergency procedures have been followed, taking into account guidelines developed by the IMO*.

* Refer to the Clarification of inert gas system requirements under the Convention (MSC/Circ.485) and to the Revised Guidelines for inert gas systems (MSC/Circ.353), as amended by MSC/Circ.387, as amended.

Chapter 12

Alternative Design and Arrangements

12.1 General

12.1.1 Fire safety design and arrangements may deviate from the prescriptive requirements set out in Chapter 2 to Chapter 13, provided that the design and arrangements meet the fire safety objectives and the functional requirements as specified in 1.6 of this Part.

12.1.2 When fire safety design or arrangements deviate from the prescriptive requirements of this Part, engineering analysis, evaluation and approval of the alternative design and arrangements are to be carried out in accordance with this Chapter.

12.2 Engineering Analysis

12.2.1 The engineering analysis is to be prepared and submitted to the Society, based on the guidelines developed by the IMO* and is to include, as a minimum, the following elements:

* Refer to the Guidelines on alternative design and arrangements for fire safety (MSC/Circ.1002, as amended by MSC/Circ.1552, as may be amended).

(a) determination of the ship type and space(s) concerned;

(b) identification of prescriptive requirement(s) with which the ship or the space(s) will not comply;

(c) identification of the fire and explosion hazards of the ship or the space(s) concerned;
   (i) identification of the possible ignition sources;
   (ii) identification of the fire growth potential of each space concerned;
   (iii) identification of the smoke and toxic effluent generation potential for each space concerned;
   (iv) identification of the potential for the spread of fire, smoke or of toxic effluents from the space(s) concerned to other spaces;

(d) determination of the required fire safety performance criteria for the ships or the space(s) concerned addressed by the prescriptive requirement(s);
   (i) performance criteria are to be based on the fire safety objectives and on the functional requirements as specified in 1.6 of this part;
   (ii) performance criteria are to provide a degree of safety not less than that achieved by using the prescriptive requirements; and
   (iii) performance criteria are to be quantifiable and measurable;

(e) detailed description of the alternative design and arrangements, including a list of the assumptions used in the design and any proposed operational restrictions or conditions; and

(f) technical justification demonstrating that the alternative design and arrangements meet the required fire safety performance criteria.

12.3 Evaluation of the Alternative Design and Arrangements

12.3.1 The engineering analysis required in 12.2 above are to be evaluated and approved by the Society taking into account the guidelines developed by the IMO*.

* Refer to the Guidelines on alternative design and arrangements for fire safety (MSC/Circ.1002, as amended by MSC/Circ.1552, as may be amended).

12.3.2 A copy of the documentation, as approved by the Administration and the Society, indicating that the alternative design and arrangements comply with this chapter are to be carried onboard the ship.

12.4 Re-evaluation due to Change of Conditions

If the assumptions, and operational restrictions that were stipulated in the alternative design and arrangements are changed, the engineering analysis are to be carried out under the changed condition and are to be approved by the Society.

Chapter 13

Special Requirements

13.1 Helicopter Facilities

13.1.1 Application

(a) In addition to complying with the requirements in Chapter 2 to Chapter 12 as appropriate, ships equipped with helidecks are to comply with the requirements of this section.

(b) Where helicopters land or conduct winching operations on an occasional or emergency basis on ships without helidecks, fire-fighting equipment fitted in accordance with the requirements in Chapter 5 to Chapter 9 may be used. This equipment are to be made readily available in close proximity to the landing or winching areas during helicopter operations.

(c) Notwithstanding the requirements of 13.1.1(b) above, Ro-Ro passenger ships without helidecks are to comply with SOLAS regulation III/28.

13.1.2 Structure

(a) Construction of steel or other equivalent material

In general, the construction of the helidecks are to be of steel or other equivalent materials. If the helideck forms the deckhead of a deckhouse or superstructure, it is to be insulated to "A-60" class standard.

(b) Construction of aluminium or other low melting point metals

If the Society permits aluminium or other low melting point metal construction that is not made equivalent to steel, the following provisions are to be satisfied:

(i) if the platform is cantilevered over the side of the ship, after each fire on the ship or on the platform, the platform are to undergo a structural analysis to determine its suitability for further use; and

(ii) if the platform is located above the ship's deckhouse or similar structure, the following conditions are to be satisfied:

(1) the deckhouse top and bulkheads under the platform are to have no openings;

(2) windows under the platform are to be provided with steel shutters; and

(3) after each fire on the platform or in close proximity, the platform are to undergo a structural analysis to determine its suitability for further use.

13.1.3 Means of escape

A helideck is to be provided with both a main and an emergency means of escape and access for fire fighting and rescue personnel. These are to be located as far apart from each other as is practicable and preferably on opposite sides of the helideck.

13.1.4 Fire-fighting appliances

(a) In close proximity to the helideck, the following fire-fighting appliances are to be provided and stored near the means of access to that helideck:

(i) at least two dry powder extinguishers having a total capacity of not less than 45 kg;*

(ii) carbon dioxide extinguishers of a total capacity of not less than 18 kg or equivalent;*

* Refer to Unified Interpretation of SOLAS chapter II-2 on the number and arrangement of portable fire extinguishers on board ships (MSC.1/Circ.1275, as may be amended)

(iii) a suitable foam application system consisting of monitors or foam making branch pipes capable of delivering foam to all parts of the helideck in all weather conditions in which helicopters can operate. The system are to be capable of delivering a discharge rate as required in Table IX 13-1 for at least five minutes;

Table IX 13-1
Foam Discharge Rates

Category	Helicopter overall length	Discharge rate foam solution (*l* / min)
H1	up to but not including 15 m	250
H2	from 15 m up to but not including 24 m	500
H3	from 24 m up to but not including 35 m	800

(iv) the principal agent are to be suitable for use with salt water and conform to performance standards not inferior to those acceptable to the Society;*

* Refer to the International Civil Aviation Organization Airport Services Manual, part 1 - Rescue and Fire fighting, Chapter 8 - Extinguishing Agent Characteristics, Paragraph 8.1.5 - Foam Specifications Table 8-1, Level "B".

(v) at least two nozzles of an approved dual-purpose type (jet/spray) and hoses sufficient to reach any part of the helideck;

(vi) in lieu of the requirements of 13.1.4(a)(iii) through 13.1.4(a)(v), on ships constructed on or after 1 January 2020 having a helideck, foam firefighting appliances which comply with the provisions of the FSS Code.

(vii) in addition to the requirements of 8.9 of this Part, two sets of fire-fighter's outfits; and

(viii) at least the following equipment are to be stored in a manner that provides for immediate use and protection from the elements:

(1) adjustable wrench;

(2) blanket, fire-resistant;

(3) cutters, bolt, 60 cm;

(4) hook, grab or salving;

(5) hacksaw, heavy duty complete with 6 spare blades;

(6) ladder;

(7) lift line 5 mm diameter and 15 m in length;

(8) pliers, side-cutting;

(9) set of assorted screwdrivers; and

(10) harness knife complete with sheath.

13.1.5 Drainage facilities

Drainage facilities in way of helidecks are to be constructed of steel and are to lead directly overboard independent of any other system and are to be designed so that drainage does not fall onto any part of the ship.

13.1.6 Helicopter refueling and hangar facilities

Where the ship has helicopter refuelling and hangar facilities, the following requirements are to be complied with:

(a) a designated area are to be provided for the storage of fuel tanks which are to be:

(i) as remote as is practicable from accommodation spaces, escape routes and embarkation stations; and

(ii) isolated from areas containing a source of vapour ignition;

(b) the fuel storage area are to be provided with arrangements whereby fuel spillage may be collected and drained to a safe location;

(c) tanks and associated equipment are to be protected against physical damage and from a fire in an adjacent space or area;

(d) where portable fuel storage tanks are used, special attention are to be given to:

(i) design of the tank for its intended purpose;

(ii) mounting and securing arrangements;

(iii) electric bonding; and

(iv) inspection procedures;

(e) storage tank fuel pumps are to be provided with means which permit shutdown from a safe remote location in the event of a fire. Where a gravity fuelling system is installed, equivalent closing arrangements are to be provided to isolate the fuel source;

(f) the fuel pumping unit is to be connected to one tank at a time. The piping between the tank and the pumping unit is to be of steel or equivalent material, as short as possible, and protected against damage;

(g) electrical fuel pumping units and associated control equipment are to be of a type suitable for the location and potential hazards;

(h) fuel pumping units are to incorporate a device which will prevent over-pressurization of the delivery or filling hose;

(i) equipment used in refuelling operations are to be electrically bonded;

(j) "NO SMOKING" signs are to be displayed at appropriate locations;

(k) hangar, refuelling and maintenance facilities are to be treated as category A machinery spaces with regard to structural fire protection, fixed fire-extinguishing and detection system requirements;

(l) enclosed hangar facilities or enclosed spaces containing refuelling installations are to be provided with mechanical ventilation, as required by 13.3.2 of this Part for closed Ro-Ro spaces of cargo ships. Ventilation fans are to be of non-sparking type; and

(m) electric equipment and wiring in enclosed hangar or enclosed spaces containing refuelling installations are to comply with 13.3.2(b), 13.3.2(c) and 13.3.2(d) of this Part.

13.1.7 Operations manual and fire -fighting service

(a) Each helicopter facility are to have an operations manual, including a description and a checklist of safety precautions, procedures and equipment requirements. This manual may be part of the ship's emergency response procedures.

(b) The procedures and precautions to be followed during refuelling operations are to be in accordance with recognized safe practices and contained in the operations manual.

(c) Fire-fighting personnel consisting of at least two persons trained for rescue and fire-fighting duties and fire-fighting equipment are to be immediately available at all times when helicopter operations are expected.

(d) Fire-fighting personnel are to be present during refuelling operations. However, the fire-fighting personnel are not to be involved with refuelling activities.

(e) On-board refresher training are to be carried out and additional supplies of fire-fighting media are to be provided for training and testing of the equipment.

13.2 Carriage of Dangerous Goods*

* Refer to the Interim guidelines for open-top containerships MSC/Circ.608/Rev.1, as may be amended.

13.2.1 General requirements

(a) In addition to complying with the requirements of Chapter 2 to Chapter 11, Section 13.1 and 13.3* as appropriate, ship types and cargo spaces, referred to in 13.2.1(b), intended for the carriage of dangerous goods are to comply with the requirements of this section, as appropriate, except when carrying dangerous goods in limited quantities** and excepted quantities*** unless such requirements have already been met by compliance with the requirements elsewhere in this Part. The types of ships and modes of carriage of dangerous goods are referred to in 13.2.1(b) and in Table IX 13-2. Cargo ships of less than 500 gross tonnage are to comply with this section, but the Society may reduce the requirements.

* Refer to part 7 of the General Introduction to the IMDG Code.

** Refer to chapter 3.4 of the General Introduction to the IMDG Code.

*** Refer to chapter 3.5 of the IMDG Code.

(b) The following ship types and cargo spaces are to govern the application of Table IX 13-2 and Table IX 13-3:

(i) ships and cargo spaces not specifically designed for the carriage of freight containers, but intended for the carriage of dangerous goods in packaged form including goods in freight containers and portable tanks;

(ii) purpose-built container ships and cargo spaces intended for the carriage of dangerous goods in freight containers and portable tanks;

(iii) Ro-Ro ships and Ro-Ro spaces intended for the carriage of dangerous goods;

(iv) ships and cargo spaces intended for the carriage of solid dangerous goods in bulk; and

(v) ships and cargo spaces intended for carriage of dangerous goods other than liquids and gases in bulk in shipborne barges.

13.2.2 Special requirements

Unless otherwise specified, the following requirements are to govern the application of Table IX 13-2, Table IX 13-3 and Table IX 13-4 to both "on-deck" and "under-deck" stowage of dangerous goods where the numbers of the following paragraphs are indicated in the first column of the tables.

(a) Water supplies

(i) Arrangements are to be made to ensure immediate availability of a supply of water from the fire main at the required pressure either by permanent pressurization or by suitably placed remote arrangements for the fire pumps.

(ii) The quantity of water delivered are to be capable of supplying four nozzles of a size and at pressures as specified in 8.1 of this Part, capable of being trained on any part of the cargo space when empty. This amount of water may be applied by equivalent means to the satisfaction of the Society.

(iii) Means are to be provided for effectively cooling the designated underdeck cargo space by at least 5 litres/min per square metre of the horizontal area of cargo spaces, either by a fixed arrangement of spraying nozzles or flooding the cargo space with water. Hoses may be used for this purpose in small cargo spaces and in small areas of larger cargo spaces at the discretion of the Society. However, the drainage and pumping arrangements are to be such as to prevent the build-up of free surfaces. The drainage system are to be sized to remove no less than 125% of the combined capacity of both the water spraying system pumps and the required number of fire hose nozzles. The drainage system valves are to be operable from outside the protected space at a position in the vicinity of the extinguishing system controls. Bilge wells are to be of sufficient holding capacity and are to be arranged at the side shell of the ship at a distance from each other of not more than 40 m in each watertight compartment. If this is not possible, the adverse effect upon stability of the added weight and free surface of water are to be taken into account to the extent deemed necessary by the Society in its approval of the stability information.*

* Refer to the Recommendation on fixed fire-extinguishing systems for special cargo spaces as adopted by the Organization by resolution A.123(V), as may be amended.

(iv) Provision to flood a designated under-deck cargo space with suitable specified media may be substituted for the requirements in 13.2.2(a)(iii) of this Part.

(v) The total required capacity of the water supply are to satisfy 13.2.2(a)(ii) and 13.2.2(a)(iii) of this Part, if applicable, simultaneously calculated for the largest designated cargo space. The capacity

requirements of 13.2.2(a)(ii) of this Part are to be met by the total capacity of the main fire pump(s) not including the capacity of the emergency fire pump, if fitted. If a drencher system is used to satisfy 13.2.2(a)(iii) of this Part, the drencher pump are to also be taken into account in this total capacity calculation.

(b) Sources of ignition

Electrical equipment and wiring are not to be fitted in enclosed cargo spaces or vehicle spaces unless it is essential for operational purposes in the opinion of the Society. However, if electrical equipment is fitted in such spaces, it is to be of a certified safe type* for use in the dangerous environments to which it may be exposed unless it is possible to completely isolate the electrical system (e.g. by removal of links in the system, other than fuses). Cable penetrations of the decks and bulkheads are to be sealed against the passage of gas or vapour. Through runs of cables and cables within the cargo spaces are to be protected against damage from impact. Any other equipment which may constitute a source of ignition of flammable vapour are not to be permitted.

* Refer to the recommendations of the International Electrotechnical Commission, in particular, publication IEC 60092 on Electrical installations in ships.

(c) Detection system

Ro-Ro spaces are to be fitted with a fixed fire detection and fire alarm system complying with the requirements of the FSS Code. All other types of cargo spaces are to be fitted with either a fixed fire detection and fire alarm system or a sample extraction smoke detection system complying with the requirements of the FSS Code. If a sample extraction smoke detection system is fitted, particular attention are to be made to paragraph 2.1.3 in Chapter 10 of the FSS Code in order to prevent the leakage of toxic fumes into occupied areas.

(d) Ventilation arrangement

(i) Adequate power ventilation are to be provided in enclosed cargo spaces. The arrangement are to be such as to provide for at least six air changes per hour in the cargo space based on an empty cargo space and for removal of vapours from the upper or lower parts of the cargo space, as appropriate.

(ii) The fans are to be such as to avoid the possibility of ignition of flammable gas air mixtures. Suitable wire mesh guards are to be fitted over inlet and outlet ventilation openings.

(iii) Natural ventilation are to be provided in enclosed cargo spaces intended for the carriage of solid dangerous goods in bulk, where there is no provision for mechanical ventilation.

(e) Bilge pumping

(i) Where it is intended to carry flammable or toxic liquids in enclosed cargo spaces, the bilge pumping system are to be designed to protect against inadvertent pumping of such liquids through machinery space piping or pumps. Where large quantities of such liquids are carried, consideration are to be given to the provision of additional means of draining those cargo spaces.

(ii) If the bilge drainage system is additional to the system served by pumps in the machinery space, the capacity of the system are to be not less than 10 m^3/h per cargo space served. If the additional system is common, the capacity need not exceed 25 m^3/h. The additional bilge system need not be arranged with redundancy.

(iii) Whenever flammable or toxic liquids are carried, the bilge line into the machinery space are to be isolated either by fitting a blank flange or by a closed lockable valve.

(iv) Enclosed spaces outside machinery spaces containing bilge pumps serving cargo spaces intended for carriage of flammable or toxic liquids are to be fitted with separate mechanical ventilation giving at least 6 air changes per hour. If the space has access from another enclosed space, the door are to be self-closing.

(v) If bilge drainage of cargo spaces is arranged by gravity drainage, the drainage are to be either led directly overboard or to a closed drain tank located outside the machinery spaces. The tank are to be provided with a vent pipe to a safe location on the open deck. Drainage from a cargo space into bilge wells in a lower space is only permitted if that space satisfies the same requirements as the cargo space above.

(f) Personnel protection

(i) Four sets of full protective clothing resistant to chemical attack are to be provided in addition to the fire-fighter's outfits required by 8.9 of this Part and are to be selected taking into account the hazards associated with the chemicals being transported and the standards developed by the IMO according to the class and physical state*. The protective clothing are to cover all skin, so that no part of the body is unprotected.

* For solid bulk cargoes, the protective clothing should satisfy the equipment provisions specified in the respective schedules of the IMSBC Code for the individual substances. For packaged goods, the protective clothing should satisfy the equipment provisions specified in emergency procedures (EmS) of the Supplement to the IMDG Code for the individual substances.

(ii) At least two self-contained breathing apparatuses additional to those required by 8.9 of this Part are to be provided. Two spare charges suitable for use with the breathing apparatus are to be provided for each required apparatus. Passenger ships carrying not more than 36 passengers and cargo ships that are equipped with suitably located means for fully recharging the air cylinders free from contamination, need carry only one spare charge for each required apparatus.

(g) Portable fire extinguishers*

* Refer to Unified interpretation of SOLAS chapter II-2 on the number and arrangement of portable fire extinguishers on board ships (MSC.1/Circ.1275, as may be amended).

Portable fire extinguishers with a total capacity of at least 12 kg of dry powder or equivalent are to be provided for the cargo spaces. These extinguishers are to be in addition to any portable fire extinguishers required elsewhere in this part.

(h) Insulation of machinery space boundaries

Bulkheads forming boundaries between cargo spaces and machinery spaces of category A are to be insulated to "A-60" class standard, unless the dangerous goods are stowed at least 3 m horizontally away from such bulkheads. Other boundaries between such spaces are to be insulated to "A-60" class standard.

(i) Water spray system

Each open Ro-Ro space having a deck above it and each space deemed to be a closed Ro-Ro space not capable of being sealed, are to be fitted with an approved fixed pressure water-spraying system for manual operation which are to protect all parts of any deck and vehicle platform in the space, except that the Society may permit the use of any other fixed fire-extinguishing system that has been shown by full-scale test to be no less effective. However, the drainage and pumping arrangements are to be such as to prevent the build-up of free surfaces. The drainage system are to be sized to remove no less than 125% of the combined capacity of both the water spraying system pumps and the required number of fire hose nozzles. The drainage system valves are to be operable from outside the protected space at a position in the vicinity of the extinguishing system controls. Bilge wells are to be of sufficient holding capacity and are to be arranged at the side shell of the ship at a distance from each other of not more than 40 m in each watertight compartment. If this is not possible the adverse effect upon stability of the added weight and free surface of water are to be taken into account to the extent deemed necessary by the Society in its approval of the stability information.

* Refer to the Recommendation on fixed fire-extinguishing systems for special cargo spaces as adopted by the Organization by resolution A.123(V), as may be amended.

(j) Separation of Ro-Ro spaces

(i) In ships having Ro-Ro spaces, a separation are to be provided between a closed Ro-Ro space and an adjacent open Ro-Ro space. The separation are to be such as to minimize the passage of dangerous vapours and liquids between such spaces. Alternatively, such separation need not be provided if the Ro-Ro space is considered to be a closed cargo space over its entire length and are to fully comply with the relevant special requirements of this Section.

(ii) In ships having Ro-Ro spaces, a separation are to be provided between a closed Ro-Ro space and the adjacent weather deck. The separation are to be such as to minimize the passage of dangerous vapours and liquids between such spaces. Alternatively, a separation need not be provided if the arrangements of the closed Ro-Ro spaces are in accordance with those required for the dangerous goods carried on adjacent weather deck.

Table IX 13-2
Application of the Requirements to
Different Modes of Carriage of Dangerous Goods in Ships and Cargo Spaces

13.2.1(b) / 13.2	Weather decks (i) to (v) inclusive	(i) Not specifically designed	(ii) Container cargo spaces	(iii)		(iv) Solid dangerous goods in bulk	(v) Shipborne barges
				Closed Ro-Ro cargo spaces(5)	Open Ro-Ro cargo spaces		
13.2.2(a)(i)	x	x	x	x	x	For application of requirements of 13.2 to different classes of dangerous goods see Table IX 13-3	x
13.2.2(a)(ii)	x	x	x	x	x		-
13.2.2(a)(iii)	-	x	x	x	x		x
13.2.2(a)(iv)	-	x	x	x	x		x
13.2.2(b)	-	x	x	x	x		x(4)
13.2.2(c)	-	x	x	x	-		x(4)
13.2.2(d)(i)	-	x	x(1)	x	-		x(4)
13.2.2(d)(ii)	-	x	x(1)	x	-		x(4)
13.2.2(e)	-	x	x	x	-		-
13.2.2(f)(i)	x	x	x	x	x		-
13.2.2(f)(ii)	x	x	x	x	x		-
13.2.2(g)	x	x	-	-	x		-
13.2.2(h)	x	x	x(2)	x	x		-
13.2.2(i)	-		-	x(3)	x		-
13.2.2(j)(i)	-		-	x	-		-
13.2.2(j)(ii)	-		-	x	-		-

Where "x" appears in Table IX 13-2 it means this requirement is applicable to all classes of dangerous goods as given in the appropriate line of Table IX 13-4, except as indicated by the notes.

Notes:

(1) For classes 4 and 5.1 solids not applicable to closed freight containers. For classes 2, 3, 6.1 and 8 when carried in closed freight containers, the ventilation rate may be reduced to not less than two air changes per hour. For classes 4 and 5.1 liquids when carried in closed freight containers, the ventilation rate may be reduced to not less than two air changes per hour. For the purpose of this requirement, a portable tank is a closed freight container.

(2) Applicable to decks only.

(3) Applies only to closed Ro-Ro spaces, not capable of being sealed.

(4) In the special case where the barges are capable of containing flammable vapours or alternatively if they are capable of discharging flammable vapours to a safe space outside the barge carrier compartment by means of ventilation ducts connected to the barges, these requirements may be reduced or waived to the satisfaction of the Society.

(5) Special category spaces are to be treated as closed Ro-Ro spaces when dangerous goods are carried.

Table IX 13-3
Application of the Requirements to Different Classes of Dangerous Goods for Ships and Cargo Spaces Carrying Solid Dangerous Goods in Bulk

Class / 13.2	4.1	4.2	4.3(6)	5.1	6.1	8	9
13.2.2(a)(i)	x	x	-	x	-	-	x
13.2.2(a)(ii)	x	x	-	x	-	-	x
13.2.2(b)	x	x(7)	x	x(8)	-	-	x(8)
13.2.2(d)(i)	-	x(7)	x	-	-	-	-
13.2.2(d)(ii)	x(9)	x(7)	x	x(7),(9)	-	-	x(7),(9)
13.2.2(d)(iii)	x	x	x	x	x	x	x
13.2.2(f)	x	x	x	x	x	x	x
13.2.2(h)	x	x	x	x(7)	-	-	x(10)

Notes:

(6) The hazards of substances in this class which may be carried in bulk are such that special consideration must be given by the Society to the construction and equipment of the ship involved in addition to meeting the requirements enumerated in this table.

(7) Only applicable to Seedcake containing solvent extractions, to Ammonium nitrate and to Ammonium nitrate fertilizers.

(8) Only applicable to Ammonium nitrate and to Ammonium nitrate fertilizers. However, a degree of protection in accordance with standards contained in the International Electrotechnical Commission (IEC) publication 60079, Electrical Apparatus for Explosive Gas Atmospheres, is sufficient.

(9) Only suitable wire mesh guards are required.

(10) The requirements of the IMSBC Code, as amended, are sufficient.

Table IX 13-4
Application of the Requirements to Different Classes of Dangerous Goods for Ships and Cargo Spaces Carrying Solid Dangerous Goods in Bulk

13.2.1(b) / 13.2	1.1 to 1.6	1.4S	2.1	2.2	2.3 flammable(20)	2.3 Non-flammable	3 FP(15) < 23 °C	3 23°C ≤ FP(15) ≤ 60°C	4.1	4.2	4.3 liquids(21)	4.3 solid	5.1	5.2(16)	6.1 liquids FP(15) < 23°C	6.1 liquids 23°C ≤ FP(15) ≤ 60°C	6.1 liquids	6.1 solids	8 liquids FP(15) < 23°C	8 liquids 23°C ≤ FP(15) ≤ 60°C	8 liquids	8 solids	9
13.2.2(a)(i)	x	x	x	x	x	x	x	x	x	x	x	x	x	x	x	x	x	x	x	x	x	x	x
13.2.2(a)(ii)	x	x	x	x	x	x	x	x	x	x	x	x	x	x	x	x	x	x	x	x	x	x	-
13.2.2(a)(iii)	x	-	-	-	-	-	-	-	-	-	-	-	-	-	-	-	-	-	-	-	-	-	-
13.2.2(a)(iv)	x	-	-	-	-	-	-	-	-	-	-	-	-	-	-	-	-	-	-	-	-	-	-
13.2.2(b)	x	-	x	-	x	-	x	-	-	-	x(18)	-	-	-	x	-	-	-	x	-	-	-	x(17)
13.2.2(c)	x	x	x	x	-	x	x	x	x	x	x	x	x	-	x	x	x	x	x	x	x	x	-
13.2.2(d)(i)	-	-	x	-	-	x	x	-	x(11)	x(11)	x	x	x(11)	-	x	x	-	x(11)	x	x	-	-	x(11)
13.2.2(d)(ii)	-	-	x	-	-	-	x	-	-	-	-	-	-	-	x	-	-	-	x	-	-	-	x(17)
13.2.2(e)	-	-	-	-	-	-	x	-	-	-	-	-	-	-	x	x	x	-	x	x(19)	x(19)	-	-
13.2.2(f)(i)	-	-	x	x	x	x	x	x	x	x	x	x	x	x	x	x	x	x	x	x	x	x	x(14)
13.2.2(g)	-	-	-	-	-	-	x	x	x	x	x	x	x	-	x	x	-	-	x	x	-	-	-
13.2.2(h)	x(12)	-	x	x	x	x	x	x	x	x	x	x	x(13)	x	x	x	-	-	x	x	-	-	-
13.2.2(i)	x	x	x	x	x	x	x	x	x	x	x	x	x	x	x	x	x	x	x	x	x	x	x
13.2.2(j)(i)	x	x	x	x	x	x	x	x	x	x	x	x	x	x	x	x	x	x	x	x	x	x	x
13.2.2(j)(ii)	x	x	x	x	x	x	x	x	x	x	x	x	x	x	x	x	x	x	x	x	x	x	x

Notes:

(11) When "mechanically-ventilated spaces" are required by the IMDG Code.

(12) Stow 3 m horizontally away from the machinery space boundaries in all cases.

(13) Refer to the IMDG Code.

(14) As appropriate for the goods to be carried.

(15) FP means flashpoint.

(16) Under the provisions of the IMDG Code, stowage of class 5.2 dangerous goods under deck or in enclosed Ro-Ro spaces is prohibited.

(17) Only applicable to dangerous goods evolving flammable vapour listed in the IMDG Code.

(18) Only applicable to dangerous goods having a flashpoint less than 23°C listed in the IMDG Code.

(19) Only applicable to dangerous goods having a subsidiary risk class 6.1.

(20) Under the provisions of the IMDG Code, stowage of class 2.3 having subsidiary risk class 2.1 under deck or in enclosed Ro-Ro spaces is prohibited.

(21) Under the provisions of the IMDG Code, stowage of class 4.3 liquids having a flashpoint less than 23°C under deck or in enclosed Ro-Ro spaces is prohibited.

13.3 Protection of Vehicle, Special Category and Ro-Ro Spaces

13.3.1 General requirements

(a) Application

In addition to complying with the requirements from Chapter 2 to Chapter 11, as appropriate, vehicle, special category and Ro-Ro spaces are to comply with the requirements of this section.

(b) Basic principles for passenger ships

(i) The basic principle underlying the provisions of this section is that the main vertical zoning required by 7.1 of this Part may not be practicable in vehicle spaces of passenger ships and, therefore, equivalent protection must be obtained in such spaces on the basis of a horizontal zone concept and by the provision of an efficient fixed fire-extinguishing system. Based on this concept, a horizontal zone for the purpose of this section may include special category spaces on more than one deck provided that the total overall clear height for vehicles does not exceed 10 m.

(ii) The basic principle underlying the provisions of 13.3.1(b)(i) of this Part are also applicable to Ro-Ro spaces.

(iii) The requirements of ventilation systems, openings in "A" class divisions and penetrations in "A" class divisions for maintaining the integrity of vertical zones in this part are to be applied equally to decks and bulkheads forming the boundaries separating horizontal zones from each other and from the remainder of the ship.

13.3.2 Precaution against ignition of flammable vapours in closed vehicle spaces, closed Ro-Ro spaces and special category spaces

(a) Ventilation systems*

* Refer to the Design Guidelines and operational recommendations for ventilation systems in Ro-Ro cargo spaces (MSC/Circ. 729, as may be amended)

(i) Capacity of ventilation systems

There are to be provided an effective power ventilation system sufficient to give at least the following air changes:

(1) Passenger ships

a)	Special category spaces	10 air changes per hour
b)	Closed Ro-Ro and vehicle spaces other than special category spaces for ships carrying more than 36 passengers	10 air changes per hour

	c) Closed Ro-Ro and vehicle spaces other than special category spaces for ships carrying not more than 36 passengers	6 air changes per hour
(2)	Cargo ships	6 air changes per hour

The Society may require an increased number of air changes when vehicles are being loaded and unloaded.

(ii) Performance of ventilation systems

(1) In passenger ships, the power ventilation system are to be separate from other ventilation systems. The power ventilation system are to be operated to give at least the number of air changes required in 13.3.2(a)(i) of this Part at all times when vehicles are in such spaces, except where an air quality control system in accordance with 13.3.2(a)(ii)(4) of this Part is provided. Ventilation ducts serving such cargo spaces capable of being effectively sealed are to be separated for each such space. The system are to be capable of being controlled from a position outside such spaces.

(2) In cargo ships, the ventilation fans are to normally be run continuously and give at least the number of air changes required in 13.3.2(a)(i) of this Part whenever vehicles are on board, except where an air quality control system in accordance with 13.3.2(a)(ii)(4) of this Part is provided. Where this is impracticable, they are to be operated for a limited period daily as weather permits and in any case for a reasonable period prior to discharge, after which period the Ro-Ro or vehicle space are to be proved gas-free. One or more portable combustible gas detecting instruments are to be carried for this purpose. The system are to be entirely separate from other ventilation systems. Ventilation ducts serving Ro-Ro or vehicle spaces are to be capable of being effectively sealed for each cargo space. The system are to be capable of being controlled from a position outside such spaces.

(3) The ventilation system are to be such as to prevent air stratification and the formation of air pockets.

(4) For all ships, where an air quality control system is provided based on the guidelines developed by the IMO, the ventilation system may be operated at a decreased number of air changes and/or a decreased amount of ventilation. This relaxation does not apply to spaces to which at least ten air changes per hour is required by 13.3.2(b)(ii) of this Part and spaces subject to 13.2.2(d)(i) and 13.4 of this Part.

(iii) Indication of ventilation systems

Means are to be provided on the navigation bridge to indicate any loss of the required ventilating capacity.

(iv) Closing appliances and ducts

(1) Arrangements are to be provided to permit a rapid shutdown and effective closure of the ventilation system from outside of the space in case of fire, taking into account the weather and sea conditions.

(2) Ventilation ducts, including dampers, within a common horizontal zone are to be made of steel. In passenger ships, ventilation ducts that pass through other horizontal zones or machinery spaces are to be "A-60" class steel ducts constructed in accordance with 7.6.2(d)(i) and 7.6.2(d)(ii) of this Part.

(v) Permanent openings

Permanent openings in the side plating, the ends or deckhead of the space are to be so situated that a fire in the cargo space does not endanger stowage areas and embarkation stations for survival craft and accommodation spaces, service spaces and control stations in superstructures and deckhouses above the cargo spaces.

(b) Electrical equipment and wiring

(i) Except as provided in 13.3.2(b)(ii) of this Part, electrical equipment and wiring are to be of a type suitable for use in an explosive petrol and air mixture.*

* Refer to the recommendations of the International Electrotechnical Commission, in particular, publication 60079, Electrical apparatus for explosive gas atmospheres.

(ii) In case of other than special category spaces below the bulkhead deck, notwithstanding the provisions in 13.3.2(b)(i) of this Part, above a height of 450 mm from the deck and from each platform for vehicles, if fitted, except platforms with openings of sufficient size permitting penetration of petrol gases downwards, electrical equipment of a type so enclosed and protected as to prevent the escape of sparks are to be permitted as an alternative on condition that the ventilation system is so designed and operated as to provide continuous ventilation of the cargo spaces at the rate of at least ten air changes per hour whenever vehicles are on board.

(c) Electrical equipment and wiring in exhaust ventilation ducts

Electrical equipment and wiring, if installed in an exhaust ventilation duct, are to be of a type approved for use in explosive petrol and air mixtures and the outlet from any exhaust duct are to be sited in a safe position, having regard to other possible sources of ignition.

(d) Other ignition sources

Other equipment which may constitute a source of ignition of flammable vapours are not to be permitted.

(e) Scuppers and discharges

Scuppers are not to be led to machinery or other spaces where sources of ignition may be present.

13.3.3 Detection and alarm

(a) Fixed fire detection and fire alarm systems

Except as provided in 13.3.3(c)(i) of this Part, there are to be provided a fixed fire detection and fire alarm system complying with the requirements of the FSS Code. The fixed fire detection system are to be capable of rapidly detecting the onset of fire. The type of detectors and their spacing and location are to be to the satisfaction of the Society taking into account the effects of ventilation and other relevant factors. After being installed the system are to be tested under normal ventilation conditions and are to give an overall response time to the satisfaction of the Society.

(b) Sample extraction smoke detection systems

Except open Ro-Ro spaces, open vehicle spaces and special category spaces, a sample extraction smoke detection system complying with the requirements of the FSS Code may be used as an alternative of the fixed fire detection and fire alarm system required in 13.3.3(a) of this Part.

(c) Special category spaces

(i) An efficient fire patrol system are to be maintained in special category spaces. However, if an efficient fire patrol system is maintained by a continuous fire watch at all times during the voyage, a fixed fire detection and fire alarm systems is not required.

(ii) Manually operated call points are to be spaced so that no part of the space is more than 20 m from a manually operated call point, and one are to be placed close to each exit from such spaces.

13.3.4 Structural protection

Notwithstanding the provisions of 7.1.2 of this Part, in passenger ships carrying more than 36 passengers, the boundary bulkheads and decks of special category spaces and Ro-Ro spaces are to be insulated to "A-60" class standard. However, where a category e), i) and j) space, as defined in 7.1.2(c) of this Part, is on one side of the division the standard may be reduced to "A-0". Where fuel oil tanks are below a special category space or a Ro-Ro space, the integrity of the deck between such spaces, may be reduced to "A-0" standard.

13.3.5 Fire-extinction

(a) Fixed fire-extinguishing systems

(i) Vehicle spaces and Ro-Ro spaces, which are not special category spaces and are capable of being sealed from a location outside of the cargo spaces, are to be fitted with one of the following fixed fireextinguishing systems:

(1) a fixed gas fire-extinguishing system complying with the provisions of the FSS Code;

(2) a fixed high-expansion foam fire-extinguishing system complying with the provisions of the FSS Code; or

(3) a fixed water-based fire fighting system for Ro-Ro spaces and special category spaces complying with the provisions of the FSS Code and 13.3.5(a)(i) to 13.3.5(a)(iv) of this Part.

(ii) Vehicle spaces and Ro-Ro spaces not capable of being sealed and special category spaces are to be fitted with a fixed water-based fire-fighting system for Ro-Ro spaces and special category spaces complying with the provisions of the FSS Code which are to protect all parts of any deck and vehicle platform in such spaces. Such a water-based fire-fighting system are to have:

(1) a pressure gauge on the valve manifold;

(2) clear marking on each manifold valve indicating the spaces served;

(3) instructions for maintenance and operation located in the valve room; and

(4) a sufficient number of drainage valves to ensure complete drainage of the system.

(iii) The Society may permit the use of any other fixed fire-extinguishing system* that has been shown that it is not less effective by a full-scale test in conditions simulating a flowing petrol fire in a vehicle space or a Ro-Ro space in controlling fires likely to occur in such a space.

* Refer to Guidelines for the approval of fixed water-based fire-fighting systems for Ro-Ro spaces and special category spaces equivalent to that referred to in resolution A.123(V) (MSC.1/Circ.1272, as may be amended) and Revised Guidelines for the design and approval of fixed water-based fire-fighting systems for Ro-Ro spaces and special category spaces (MSC. 1/Circ.1430, as may be amended).

(iv) When fixed pressure water-spraying systems are fitted, in view of the serious loss of stability which could arise due to large quantities of water accumulating on the deck or decks during the operation of the fixed pressure water-spraying system, the following arrangements are to be provided:

(1) in passenger ships:

a) in the spaces above the bulkhead deck, scuppers are to be fitted so as to ensure that such water is rapidly discharged directly overboard, taking into account the guidelines developed by the IMO*;

* Refer to Drainage of fire-fighting water from enclosed vehicle and Ro-Ro spaces and special category spaces for passenger and cargo ships (MSC.1/Circ.1234, as may be amended)

b) discharge valves for scuppers

i) in Ro-Ro passenger ships, discharge valves for scuppers, fitted with positive means of closing operable from a position above the bulkhead deck in accordance with the requirements of the International Convention on Load Lines in force, are to be kept open while the ships are at sea;

ii) any operation of valves specified above are to be recorded in the log-book;

c) in the spaces below the bulkhead deck, the Society may require pumping and drainage facilities to be provided additional to the requirements of 3.12 of Part VI of the Rules. In such case, the drainage system are to be sized to remove no less than 125% of the combined capacity of both the water-spraying system pumps and the required number of fire hose nozzles, taking into account the guidelines developed by the IMO. The drainage system valves are to be operable from outside the protected space at a position in the vicinity of the extinguishing system controls. Bilge wells are to be of sufficient holding capacity and are to be arranged at the side shell of the ship at a distance from each other of not more than 40 m in each watertight compartment;

(2) in cargo ships, the drainage and pumping arrangements are to be such as to prevent the build-up of free surfaces. In such case, the drainage system are to be sized to remove no less than 125% of the combined capacity of both the water-spraying system pumps and the required number of fire hose nozzles, taking into account the guidelines developed by the IMO.* The drainage system valves are to be operable from outside the protected space at a position in the vicinity of the extinguishing system controls. Bilge wells are to be of sufficient holding capacity and are to be arranged at the side shell of the ship at a distance from each other of not more than 40 m in each watertight compartment. If this is not possible, the adverse effect upon stability of the added weight and free surface of water are to be taken into account to the extent deemed necessary by

the Society in its approval of the stability information**. Such information are to be included in the stability information supplied to the master as required by SOLAS Regulation II-1/5-1.
* Refer to Drainage of fire-fighting water from enclosed vehicle and Ro-Ro spaces and special category spaces for passenger and cargo ships (MSC.1/Circ.1234, as may be amended)
** Refer to the Recommendation on fixed fire-extinguishing systems for special category spaces, adopted by the IMO by resolution A.123(V) , as may be amended.

(v) On all ships, for closed vehicles and Ro-Ro spaces and special category spaces, where fixed pressure water-spraying systems are fitted, means are to be provided to prevent the blockage of drainage arrangements, taking into account the guidelines developed by the IMO*.

* Refer to Drainage of fire-fighting water from enclosed vehicle and Ro-Ro spaces and special category spaces for passenger and cargo ships (MSC.1/Circ.1234, as may be amended).

(b) Portable fire extinguishers

(i) Portable extinguishers are to be provided at each deck level in each hold or compartment where vehicles are carried, spaced not more than 20 m apart on both sides of the space. At least one portable fire-extinguisher are to be located at each access to such a cargo space.*

* Refer to Unified interpretation of SOLAS chapter II-2 on the number and arrangement of portable fire extinguishers on board ships (MSC.1/Circ.1275, as may be amended).

(ii) In addition to the provision of 13.3.5(b)(i) of this Part, the following fire extinguishing appliances are to be provided in vehicle, Ro-Ro and special category spaces intended for the carriage of motor vehicles with fuel in their tanks for their own propulsion:

(1) at least three water-fog applicators; and

(2) one portable foam applicator unit complying with the provisions of the FSS Code, provided that at least two such units are available in the ship for use in such Ro-Ro spaces.

13.4 Requirements for Vehicle Carriers Carrying Motor Vehicles with Compressed Hydrogen or Natural Gas in their Tanks for their Own Propulsion as Cargo

13.4.1 Application

In addition to complying with the requirements of 13.3 of this Chapter, as appropriate, vehicle spaces of vehicle carriers intended for the carriage of motor vehicles with compressed hydrogen or compressed natural gas in their tanks for their own propulsion as cargo are to comply with the requirements in 13.4.2 to 13.4.4 of this section.

13.4.2 Requirements for spaces intended for carriage of motor vehicles with compressed natural gas in their tanks for their own propulsion as cargo

(a) Electrical equipment and wiring

All electrical equipment and wiring are to be of a certified safe type for use in an explosive methane and air mixture.*

* Refer to the recommendations of the International Electrotechnical Commission, in particular, publication IEC 60079.

(b) Ventilation arrangement

(i) Electrical equipment and wiring, if installed in any ventilation duct, are to be of a certified safe type for use in explosive methane and air mixtures.

(ii) The fans are to be such as to avoid the possibility of ignition of methane and air mixtures. Suitable wire mesh guards are to be fitted over inlet and outlet ventilation openings.

(c) Other ignition sources

Other equipment which may constitute a source of ignition of methane and air mixtures are not to be permitted.

13.4.3 Requirements for spaces intended for carriage of motor vehicles with compressed hydrogen in their tanks for their own propulsion as cargo

(a) Electrical equipment and wiring

All electrical equipment and wiring are to be of a certified safe type for use in an explosive hydrogen and air mixture.*

* Refer to the recommendations of the International Electrotechnical Commission, in particular, publication IEC 60079.

(b) Ventilation arrangement

(i) Electrical equipment and wiring, if installed in any ventilation duct, are to be of a certified safe type for use in explosive hydrogen and air mixtures and the outlet from any exhaust duct are to be sited in a safe position, having regard to other possible sources of ignition.

(ii) The fans are to be designed such as to avoid the possibility of ignition of hydrogen and air mixtures. Suitable wire mesh guards are to be fitted over inlet and outlet ventilation openings.

(c) Other ignition sources

Other equipment which may constitute a source of ignition of hydrogen and air mixtures are not to be permitted.

13.4.4 Detection

When a vehicle carrier carries as cargo one or more motor vehicles with either compressed hydrogen or compressed natural gas in their tanks for their own propulsion, at least two portable gas detectors are to be provided. Such detectors are to be suitable for the detection of the gas fuel and be of a certified safe type for use in the explosive gas and air mixture.

13.5 Casualty Threshold, Safe Return to Port and Safe Areas

13.5.1 Application

Passenger ships, as the length is defined in the International Convention on Load Lines in force, of 120 m or more or having three or more main vertical zones are to comply with the provisions of this section.

13.5.2 Casualty threshold

The casualty threshold, in the context of a fire, includes:

(a) loss of space of origin up to the nearest "A" class boundaries, which may be a part of the space of origin, if the space of origin is protected by a fixed fire extinguishing system; or

(b) loss of the space of origin and adjacent spaces up to the nearest "A" class boundaries, which are not part of the space of origin.

13.5.3 Safe return to port*

* Refer to the Interim Explanatory Notes for the Assessment of Passenger Ship Systems' Capabilities After a Fire or Flooding Casualty (MSC.1/Circ.1369, as may be amended)

When fire damage does not exceed the casualty threshold indicated in 13.5.2 of this Part, the ship are to be capable of returning to port while providing a safe area as defined in 1.5 of this Part. To be deemed capable of returning to port, the following systems are to remain operational in the remaining part of the ship not affected by fire:

(a) propulsion;

(b) steering systems and steering-control systems;

(c) navigational systems;

(d) systems for fill, transfer and service of fuel oil;

(e) internal communication between the bridge, engineering spaces, safety centre, fire-fighting and damage control teams, and as required for passenger and crew notification and mustering;

(f) external communication;

(g) fire main system;

(h) fixed fire-extinguishing systems;

(i) fire and smoke detection system;

(j) bilge and ballast system;

(k) power-operated watertight and semi-watertight doors;

(l) systems intended to support "safe areas" as indicated in 13.5.4(a)(ii);

(m) flooding detection systems; and

(n) other systems determined by the Society to be vital to damage control efforts.

13.5.4 Safe area(s)

(a) Functional requirements:

(i) the safe area(s) is to generally be internal space(s); however, the use of an external space as a safe area may be allowed by the Society taking into account any restriction due to the area of operation and relevant expected environmental conditions;

(ii) the safe area(s) is to provide all occupants with the following basic services* to ensure that the health of passengers and crew is maintained:

* Refer to the Interim Explanatory Notes for the Assessment of Passenger Ship Systems' Capabilities After a Fire or Flooding Casualty (MSC.1/Circ.1369, as may be amended)

(1) sanitation;

(2) water;

(3) food;

(4) alternate space for medical care;

(5) shelter from the weather;

(6) means of preventing heat stress and hypothermia;

(7) light; and

(8) ventilation;

(iii) ventilation design are to reduce the risk that smoke and hot gases could affect the use of the safe area(s); and

(iv) means of access to life-saving appliances are to be provided from each area identified or used as a safe area, taking into account that a main vertical zone may not be available for internal transit.

(b) Alternate space for medical care

Alternate space for medical care are to conform to a standard acceptable to the Society.**

** Refer to the Guidance on the establishment of medical and sanitation related programmes for passenger ships (MSC/Circ.1129, as may be amended).

13.6 Design Criteria for Systems to Remain Operational After a Fire Casualty

13.6.1 Application

Passenger ships having length, as defined in the International Convention on Load Lines in force, of 120 m or more or having three or more main vertical zones are to comply with the provisions of this section. This section is to provide design criteria for systems required to remain operational for supporting the orderly evacuation and abandonment of a ship, if the casualty threshold as defined in 13.5.2 of this Chapter, is exceeded.

13.6.2 Systems*

* Refer to the Interim Explanatory Notes for the Assessment of Passenger Ship Systems' Capabilities After a Fire or Flooding Casualty (MSC.1/Circ.1369/Add.1, as may be amended)

(a) In case any one main vertical zone is unserviceable due to fire, the following systems are to be so arranged and segregated as to remain operational:
   (i) fire main;
   (ii) internal communications (in support of fire-fighting as required for passenger and crew notification and evacuation);
   (iii) means of external communications;
   (iv) bilge systems for removal of fire-fighting water;
   (v) lighting along escape routes, at assembly stations and at embarkation stations of life-saving appliances; and
   (vi) guidance systems for evacuation are to be available.

(b) The above systems are to be capable of operation for at least 3 hours based on the assumption of no damage outside the unserviceable main vertical zone. These systems are not required to remain operational within the unserviceable main vertical zones.

(c) Cabling and piping within a trunk constructed to an "A-60" standard are to be deemed to remain intact and serviceable while passing through the unserviceable main vertical zone for the purposes of 13.6.2(a) above. An equivalent degree of protection for cabling and piping may be approved by the Society.

13.7 Safety Centre on Passenger Ships

13.7.1 Application

Passenger ships are to have on board a safety centre complying with the requirements of this section to provide a space to assist with the management of emergency situations.

13.7.2 Location and arrangement

The safety centre are to either be a part of the navigation bridge or be located in a separate space adjacent to and having direct access to the navigation bridge, so that the management of emergencies can be performed without distracting watch officers from their navigational duties.

13.7.3 Layout and ergonomic design

The layout and ergonomic design of the safety centre are to take into account the guidelines developed by the IMO*, as appropriate.

* Refer to guidelines to be developed by the IMO.

13.7.4 Communications

Means of communication between the safety centre, the central control station, the navigation bridge, the engine control room, the storage room(s) for fire extinguishing system(s) and fire equipment lockers is to be provided.

13.7.5 Control and monitoring of safety systems

Notwithstanding the requirements set out elsewhere in the Convention, the full functionality (operation, control, monitoring or any combination thereof, as required) of the safety systems listed below are to be available from the safety centre:

(a) all powered ventilation systems;

(b) fire doors;

(c) general emergency alarm system;

(d) public address system;

(e) electrically powered evacuation guidance systems;

(f) watertight and semi-watertight doors;

(g) indicators for shell doors, loading doors and other closing appliances;

(h) water leakage of inner/outer bow doors, stern doors and any other shell door;

(i) television surveillance system;

(j) fire detection and alarm system;

(k) fixed fire-fighting local application system(s);

(l) sprinkler and equivalent systems;

(m) water-based systems for machinery spaces;

(n) alarm to summon the crew;

(o) atrium smoke extraction system;

(p) flooding detection systems; and

(q) fire pumps and emergency fire pumps.

Chapter 14

Ships not Engaged on International Voyages

14.1 General

14.1.1 Application

Requirements of this Chapter are to apply to ships as described in (a), (b) and (c):

(a) Passenger ships not engaged on international voyages are to comply with the requirements of this Chapter in addition to Chapter 14-1.

(b) Cargo ships other than tankers not engaged on international voyages are to comply with the requirements of this Chapter and Chapter 14-2.

(c) Tankers not engaged on international voyages are to comply with the requirements of this Chapter and Chapter 14-3.

(d) Crafts with **LSC** notation

Fire safety, means of escape and life-saving of crafts with **LSC** notation are to be in accordance with Table I 1-3 in Part I of the Rules.

14.1.2 Statutory requirements

Notwithstanding the requirements of this Chapter, the ships are to comply with the relevant regulations of the Administration.

14.2 Equivalency

Refer to the provisions specified in 1.2 of Chapter 1.

14.3 Plans and Supporting Data

Refer to the provisions specified in 1.3 of Chapter 1.

Chapter 14-1

Ships not Engaged on International Voyages: Passenger Ships

14-1.1 General

14-1.1.1 Application

(a) The requirements of this Chapter apply to the following passenger ships:

(i) Ships of Grade I

passenger ships for greater coastal service, of 100 gross tonnage and upwards, or carrying more than150 passengers; and

(ii) Ships of Grade II

passenger ships for coastal water service or protected water service, of less than 100 gross tonnage, and carrying not more than 150 passengers.

(b) Requirements of Chapter 14 are also to be complied with.

14-1.1.2 Special consideration

Where the requirements of this Chapter are impractical to a ship (e.g., considering the ship's type, size and service area), special consideration may be given by the Society.

14-1.2 Probability of Ignition

For ships of grade I, all the requirements in Chapter 2 except 2.1 and 2.4 are to apply.

14-1.3 Fire Growth Potential

14-1.3.1 Ships of Grade I

All the requirements in Chapter 3 except 3.2.3 are to apply. Furniture is not to be provided in corridor and stairways as far as practicable.

14-1.3.2 Ships of Grade II

In lieu of those specified in Chapter 3, the following requirements are to apply:

(a) Furniture is not to be provided in corridor and stairways notwithstanding the requirements of 3.2.3 of this Part.

(b) Materials for exposed surfaces of corridors and stairway enclosures, ceilings and linings in accommodation spaces and control stations are to have low flame-spread characteristics notwithstanding the requirements of 3.2.2(d)(i) of this Part.

(c) Furniture and furnishing provided in accommodation spaces and control stations are to be of those restrict fire risk as specified in 1.5.40 of this Part.

14-1.4 Smoke Generation Potential and Toxicity

14-1.4.1 Ships of Grade I

All the requirements in Chapter 4 are to apply.

14-1.4.2 Ships of Grade II

Only the requirements in 4.1 are to apply.

14-1.5 Detection and Alarm

14-1.5.1 Ships of Grade I

All the requirements in Chapter 5 are to apply.

14-1.5.2 Ships of Grade II

Unless otherwise specified as follows, the requirements in Chapter 5 are to apply:

(a) Protection of machinery spaces - installation

For passenger ships having Ro-Ro cargo spaces or spaces other than cargo spaces for carriage of motor vehicles with fuel for their own propulsion, whose main propulsion machinery has in the aggregate a total power output of not less than 750 kW, the fixed fire detection and fire alarm systems may not be required in the machinery spaces notwithstanding the requirements of 5.3.1 of this Part.

(b) Manually operated call points

Manually operated call points in accommodation spaces, service spaces and control stations are not to be required notwithstanding the requirements of 5.6 of this Part.

14-1.6 Control of Smoke Spread

For Ships of Grade I, all the requirements in Chapter 6 are to apply.

14-1.7 Containment of Fire

14-1.7.1 Ships of Grade I

In lieu of those specified in Chapter 7, the following requirements are to apply:

(a) Fire integrity

The fire integrity of bulkheads and decks which separate spaces is to comply with Table IX 14-1-1 and Table IX 14-1-2 in accordance with the adjacent spaces notwithstanding the requirements of 7.1.2(c)(i), 7.1.2(c)(ii), 7.1.2(d)(i), 7.1.2(d)(ii) of this Part.

(b) All the requirements in Chapter 7 are to apply except that

(i) the requirements of 7.1.2(a), 7.1.2(b)(i), 7.1.2(c)(i), 7.1.2(c)(ii), 7.1.2(c)(iv), 7.1.2(d)(i), 7.1.2(d)(ii), 7.1.2(d)(v), 7.1.3, 7.1.4, 7.3.1(a)(v)(7) to 7.3.1(a)(v)(11), 7.3.1(a)(viii), 7.3.1(a)(ix), 7.3.1(b)(ii), 7.3.2, 7.5.1, 7.5.3 and 7.6.4(b) of this Part are not to apply.

(ii) 7.1.2(b)(ii)(2) may apply to corridor bulkheads where not required to be "A" class, notwithstanding the number of passengers. In applying 7.1.2(b)(iii), where continuous "B" class ceilings and linings are used, they need not to be of at least the same fire resistance as the bulkhead. In applying 7.1.2(e)(i)(1), fire integrity of the stairway enclosure may be that complies with Table IX 14-1-2 or Table IX 14-1-3. 7.3.1(a)(vi) may apply, notwithstanding the number of passengers. 7.6.5(b) applies only to the exhaust ducts from galley ranges passing through accommodation spaces or spaces containing combustible materials.

14-1.7.2 Ships of Grade II

In lieu of those specified in Chapter 7, the following requirements are to apply:

(a) For passenger ships having special category spaces, the fire integrity of bulkheads and decks at boundary adjacent to machinery space category A and galley is to comply with Table IX 14-1-1 and Table IX 14-1-2 in accordance with the adjacent spaces notwithstanding the requirements of 7.1.2(c)(i), 7.1.2(c)(ii), 7.1.2(d)(i), 7.1.2(d)(ii) of this Part.

(b) Openings in bulkheads and decks in passenger ships

"A" class doors in bulkheads at boundaries adjacent to special category spaces other than power-operated watertight door or key locked doors are to be of self closing type and to be capable of closing under an against inclination of 3.5 degrees notwithstanding the requirements of 7.3.1(a)(v) of this Part.

(c) Fire integrity

The fire integrity of bulkheads and decks at the boundaries between special category spaces are to comply with Table IX 14-1-3 notwithstanding the requirements of 7.5 and 13.3.4 of this Part.

(d) Exhaust ducts from galley ranges

Requirements of 7.6.5 of this Part apply only to the exhaust ducts from galley ranges passing through accommodation spaces or spaces containing combustible materials.

(e) 7.2.1, 7.3.1(a)(i), 7.3.1(a)(ii), 7.3.1(a)(iv), 7.3.1(a)(vi) and 7.5.2 of this Part only apply to passenger ships having special category spaces. 7.3.1(a)(vi) of this Part: Openings in bulkheads and decks in passenger ships, is to apply to, regardless of the number of passengers.

Table IX 14-1-1
Fire Integrity of Bulkheads Separating Adjacent Spaces

Spaces		a)	b)	c)	d)	e)	f)	g)	h)	i)	j)	k)	l)	m)	n)
Control stations	a)	B-0	A-0	A-0	A-0	A-0 B-0	A-60	A-60	A-60	A-0	A-0	A-60	A-60	A-60	A-60
Stairways	b)		A-0	A-0	A-0	A-0	A-0	A-15 A-0	A-30 A-0	A-0	A-0	A-15	A-30	A-15 A-0	A-30
Corridors	c)			C	A-0	A-0 B-0	B-0	B-15 B-0	B-15 B-0	B-0	A-0	A-15	A-30	A-0	A-30 A-0
Evacuation stations and external escape routes	d)				-	-	A-0(2)	A-0(2)	A-0(2)	A-0(2)	A-0	A-0	A-15	A-0	A-15 A-0
Open deck spaces	e)					-	A-0 B-0	A-0 B-0	A-0 B-0	A-0 B-0	A-0	A-0	A-0	A-0 B-0	A-0
Accommodation spaces of minor fire risk	f)						B-0 C	B-15 C	B-15 C	B-0 C	A-0	A-15 A-0	A-30	A-0	A-30 A-0
Accommodation spaces of moderate fire risk	g)							B-15 C	B-15 C	B-0 C	A-0	A-15 A-0	A-60	A-15 A-0	A-60 A-15
Accommodation spaces of greater fire risk	h)								B-15 C	B-0 C	A-0	A-30 A-0	A-60	A-15 A-0	A-60 A-15
Sanitary spaces and similar spaces	i)									C	A-0	A-0	A-0	A-0	A-0
Auxiliary machinery spaces of little or no fire risk	j)										A-0(1)	A-0	A-0	A-0	A-0
Auxiliary machinery spaces of moderate fire risk	k)											A-0	A-0	A-0	A-30(3) A-15
Machinery spaces	l)												A-0(1)	A-0	A-60
Store rooms, workshops, pantries, etc.	m)													A-0(1)	A-0
Other spaces in which flammable liquids are stowed	n)														A-30(3) A-15

See notes below Table IX 14-1-3.

Table IX 14-1-2
Fire Integrity of Decks Separating Adjacent Spaces

Spaces above deck → / Spaces below deck↓		a)	b)	c)	d)	e)	f)	g)	h)	i)	j)	k)	l)	m)	n)
Control stations	a)	A-30 A-0	A-30 A-0	A-15 A-0	A-0	A-0 B-0	A-0	A-15 A-0	A-30 A-0	A-0	A-0	A-0	A-60	A-0	A-60 A-15
Stairways	b)	A-0	A-0	A-0	A-0	A-0 B-0	A-0	A-0	A-0	A-0	A-0	A-0	A-30	A-0	A-30 A-0
Corridors	c)	A-15 A-0	A-0	A-0 B-0	A-0	A-0 B-0	A-0 B-0	A-15 B-0	A-15 B-0	A-0 B-0	A-0	A-0	A-30	A-0	A-30 A-0
Evacuation stations and external escape routes	d)	A-0	A-0	A-0	A-0	-	A-0 B-0	A-0 B-0	A-0 B-0	A-0 B-0	A-0	A-0	A-0	A-0	A-0
Open deck spaces	e)	A-0	A-0	A-0 B-0	A-0	-	A-0 B-0	A-0 B-0	A-0 B-0	A-0 B-0	A-0	A-0	A-0	A-0 B-0	A-0
Accommodation spaces of minor fire risk	f)	A-60	A-15 A-0	A-0	A-0	A-0 B-0	A-0 B-0	A-0 B-0	A-0 B-0	A-0 B-0	A-0	A-0	A-15 A-0	A-0	A-15 A-0
Accommodation spaces of moderate fire risk	g)	A-60	A-30 A-0	A-15 A-0	A-15 A-0	A-0 B-0	A-0 B-0	A-15 B-0	A-30 B-0	A-0 B-0	A-0	A-15 A-0	A-30 A-0	A-0	A-30 A-0
Accommodation spaces of greater fire risk	h)	A-60	A-60 A-15	A-60 A-0	A-30 A-0	A-0 B-0	A-15 B-0	A-30 B-0	A-60 B-0	A-0 B-0	A-0	A-30 A-0	A-30 A-0	A-0	A-30 A-0
Sanitary spaces and similar spaces	i)	A-0	A-0	A-0 B-0	A-0	A-0 B-0	A-0 B-0	A-0 B-0	A-0 B-0	A-0 B-0	A-0	A-0	A-0	A-0	A-0
Auxiliary machinery spaces of little or no fire risk	j)	A-0	A-0	A-0	A-0	A-0	A-0	A-0	A-0	A-0	A-0(1)	A-0	A-0	A-0	A-0
Auxiliary machinery spaces of moderate fire risk	k)	A-60	A-60 A-15	A-60 A-15	A-30 A-0	A-0	A-0	A-15 A-0	A-30 A-0	A-0	A-0	A-0(1)	A-0	A-0	A-30(3) A-15
Machinery spaces	l)	A-60	A-60	A-60	A-60	A-0	A-60	A-60	A-60	A-0	A-0	A-30	A-30(1)	A-0	A-60
Store rooms, workshops, pantries, etc.	m)	A-60	A-30 A-0	A-15 A-0	A-15 A-0	A-0 B-0	A-15 A-0	A-30 A-0	A-30 A-0	A-0 B-0	A-0	A-0	A-0	A-0	A-15(3) A-0
Other spaces in which flammable liquids are stowed	n)	A-60	A-60 A-30	A-60 A-30	A-60	A-0	A-30 A-0	A-60 A-15	A-60 A-15	A-0	A-0	A-30(3) A-0	A-30(3) A-0	A-0	A-30(3) A-0

See notes below Table IX 14-1-3.

Table IX 14-1-3
Fire Integrity of Bulkheads and Decks Separating Adjacent Space from Special Category Spaces

Spaces ↓ / Bulkheads and Decks →		Bulkheads	Decks above special category spaces	Decks below special category spaces
Control stations	a)	A-60	A-60	A-30
Stairways	b)	A-30	A-60	A-0
Corridors	c)	A-30	A-60	A-0
Evacuation stations and external escape routes	d)	A-0	A-60	A-0
Open deck spaces	e)	A-0	A-0	A-0
Accommodation spaces of minor fire risk	f)	A-15 A-0	A-30 A-0	A-15 A-0
Accommodation spaces of moderate fire risk	g)	A-30 A-0	A-60 A-15	A-30 A-0
Accommodation spaces of greater fire risk	h)	A-60 A-15	A-60 A-15	A-30 A-0
Sanitary spaces and similar spaces	i)	A-0	A-0	A-0
Auxiliary machinery spaces of little or no fire risk	j)	A-0	A-0	A-0
Auxiliary machinery spaces of moderate fire risk	k)	A-0	A-0	A-0
Machinery spaces	l)	A-60	A-30	A-60
Store rooms, workshops, pantries, etc.	m)	A-0	A-30(3) A-0	A-0
Other spaces in which flammable liquids are stowed	n)	A-60	A-30	A-60

Notes: To be applied to Table IX 14-1-1, Table IX 14-1-2 and Table IX 14-1-3

1. Refer to 7.1.2(c)(ii)(2) for the contents and use of the spaces, except the following spaces:
   (a) Corridors: corridors and lobbies.
   (b) Evacuation stations: open deck spaces and enclosed promenades forming lifeboat or liferaft embarkation and lowering stations.
   (c) Open deck spaces: open deck spaces and enclosed promenades clear of lifeboat and liferaft embarkation lowering stations and the spaces clear of spaces outside superstructures and lowering stations.
2. Where the contents and use of a space are such that there is a doubt as to its classification for the purpose of this Chapter, or where it is possible to assign two or more classifications to a space, it is to be treated as a space within the relevant category having the most stringent boundary requirements.
3. The superscript (1), (2) and (3) to the notations in the table means:
   (1): Where adjacent spaces are of the same alphabetic category, a bulkhead or deck of the rating shown in the table is only required when the adjacent spaces are for a different purpose.
   (2): Where all bulkheads are divisions at boundary adjacent to muster stations, the division may be "B-0".
   (3): See note 6(c) below.
4. "C" means "C" class division or non-combustible division constructed of combustible materials where the spaces in both sides of bulkheads are fitted with automatic sprinkler system.
5. "-" may be division other than "A", "B" and "C" class division.
6. Where two divisions in the table appear, the divisions are to comply with the following.
   (a) The division is to be one upper tier of two divisions in the table.
   (b) Notwithstanding (a) above, the division at boundary between two spaces which are protected by an automatic sprinkler system may be one in lower tier of two divisions in the table.

(c) Notwithstanding (a) above, where superscript (3) appears, the division at boundary between space which is protected by an automatic sprinkler system and space which is not protected by an automatic sprinkler system may be one in lower tier of two divisions in the table.

14-1.8 Fire Fighting

14-1.8.1 Ships of Grade I

Unless otherwise specified as follows, the requirements in Chapter 8 are to apply:

(a) Arrangement of fire pumps and fire mains

Notwithstanding the requirements of 8.1.2(c) of this Part:

- in passenger ships of less than 3,000 gross tonnage, a fixed emergency fire pump complying with the following requirements may be accepted when provided in such a compartment that a fire in any one compartment will not render all fire pumps inoperable; and
- in passenger ships of less than 1,000 gross tonnage, the emergency fire pump may not be of fixed type.

(i) The emergency fire pump is to comply with 8.1.2(c)(i)(2) of this Part and its source of power and sea connection are not to be provided in machinery spaces of category A.

(ii) The emergency fire pump is to be arranged aft of the collision bulkhead. Where the pump is provided in the space separated from the spaces always attended by the crew, means are to be provided to be remotely operated at the navigation bridge or the fire control station in addition to the local operation.

(b) Fire-fighter's outfits

Notwithstanding the requirements of 8.9.2(b)(i) of this Part:

The number of fire-fighter's outfits are to be each two sets of fire-fighter's outfits and personal equipment for every 80 m, or part thereof, of the aggregate of the length of all passenger spaces and service spaces on the deck which carries such spaces or, if there is more than one such deck, on the deck which has the largest aggregate of such lengths.

(c) 8.1.1(g) of this Part may not to apply.

14-1.8.2 Ships of Grade II

Unless otherwise specified as follows, the requirements in Chapter 8 are to apply:

(a) Number and total capacity of fire pump

Notwithstanding the requirements of 8.1.1(f)(i), 8.1.2(b)(i) and 8.1.2(d)(i) of this Part:

One independently power driven fire pump may be accepted. The fire pumps are to be capable of delivering a quantity of water more than two thirds of quantity which bilge pumps can draw, and maintaining 0.3 MPa pressure at all hydrants. In passenger ships of less than 100 gross tonnage, 4 buckets or bailers painted in red may be accepted when widely separated for immediate use. For passenger ships for Protected Water Service, the number of buckets or bailers may be reduced to 2.

(b) Number and position of hydrants

Except special category spaces, the number and position of hydrants may be such that at least one jet of water may reach any part of the ship normally accessible to the passenger or crew while the ship is being navigated and any part of any cargo space (when empty) notwithstanding the requirements of 8.1.1(e)(i) of this Part.

(c) Ready availability of water supply

Fire hoses may not be permanently connected with the fire hydrants notwithstanding the requirements of 8.1.1(b) and 8.1.3(a)(i) of this Part.

(d) Arrangement of fire extinguishers

The number of portable liquid fire extinguisher, foam fire extinguisher or powder fire extinguisher (only the extinguisher which extinguishing medium is phosphate) is to be such that no point in the accommodation

space and service space is more than 15 m walking distance from any extinguisher and that there are at least two such extinguishers in each decks notwithstanding the requirements of 8.2.2(a) of this Part.

(e) Machinery spaces containing oil-fired boilers or oil fuel units

A fixed fire extinguishing system may not be provided in spaces only having oil fuel units notwithstanding the requirements of 8.4.1(a) of this Part.

(f) Additional fire-extinguishing arrangements

(i) Either foam fire extinguisher of 45 litters capacity, carbon dioxide gas fire extinguisher with a mass of 16 kg or powder fire extinguisher with a mass of 23 kg may be accepted in the boiler room containing oil-fired boilers notwithstanding the requirements of 8.4.1(b)(ii) of this Part.

(ii) Either a portable foam extinguisher, carbon dioxide gas fire extinguisher or powder fire extinguisher may be accepted in each firing space in the boiler room and in each space in which a part of oil fuel installation is situated notwithstanding the requirements of 8.4.1(b)(iii) of this Part.

(g) Machinery spaces of category A containing internal combustion machinery

Notwithstanding the requirements of 8.4.2 of this Part:

- Either a portable foam fire extinguisher of 45 litters capacity, carbon dioxide gas fire extinguisher with a mass of 16 kg or powder fire extinguisher with a mass of 23 kg may be accepted in spaces containing internal combustion machinery (main engine or auxiliary which has in the aggregate a total power output of not less than 750 kW). Additionally the number of portable foam fire extinguisher, carbon dioxide gas fire extinguisher or powder fire extinguisher is to be such that no point in each such spaces is more than 10 m walking distance from any extinguisher and that there are at least two such extinguishers in each such spaces.

- For ships having special category spaces and the main propulsion machinery which has in the aggregate a total power output of not less than 750 kW, a fixed fire extinguishing system is to be provided.

(h) Automatic sprinkler, fire detection and fire alarm system

Automatic sprinkler, fire detection and fire alarm systems are not required in the space except for special category spaces and machinery spaces in ships to which the requirement in 14-1.5.2(a) does not apply notwithstanding the requirements of 8.5.1(a) of this Part.

(i) Spaces containing flammable liquid

Either a portable foam fire extinguisher, carbon dioxide gas fire extinguisher or powder fire extinguisher may be accepted at outside the entrance of paint lockers and pump rooms notwithstanding the requirements of 8.5.3 of this Part.

(j) Storage of fire-fighter's outfits

Only each two sets of fire-fighter's outfits and personal equipment may be accepted provided that they are ready for use and stored in an easily accessible and widely separated position notwithstanding the requirements of 8.9.3 of this Part.

(k) The following requirements are not to apply as deemed appropriate by the Society:

8.1.1(b)(i)(2), 8.1.1(e)(ii)(2), 8.1.1(g), 8.4.1(b), 8.4.4 (excluding (g) above), 8.4.5, 8.4.6, 8.9.2(b) and 8.9.2(c) of this Part.

14-1.9 Structural Integrity

Unless otherwise specified as follows, the requirements in Chapter 9 are to apply:

14-1.9.1 Ships of Grade I

All the requirements in Chapter 9 are to apply, as applicable.

14-1.9.2 Ships of Grade II

(a) All the requirements in Chapter 9 are to apply, as applicable.

(b) The hull, superstructures, structural bulkheads, decks and deckhouses may be constructed of non-combustible materials or fire retardant FRP*, as deemed appropriate by the Society in consideration as follows:

(i) ship size and operation area;

(ii) structural fire protection time (in compliance with FTP Code);

(iii) fire alarm and fire detection system;

(iv) fire extinguishing system;

(v) escape arrangements;

(vi) life-saving appliances; and

(vii) other relevant arrangements or devices as deemed necessary by the Society.

* Fire retardance of FRP is to be tested by an authorized laboratory in accordance with a recognized standard accepted by the Society, and its approval document is required.

14-1.10 Escape

Unless otherwise specified as follows, the requirements in Chapter 10 are to apply:

14-1.10.1 Ships of Grade I

(a) Dead-end corridors are not to exceed 7 m in length notwithstanding the requirements of 10.2.2(a)(ii) of this Part.

(b) Direct access to stairway enclosures

Notwithstanding the requirements of 10.2.2(b)(iii) of this Part:

Stairway enclosures in accommodation spaces and service spaces are to have direct access to corridors and not to confuse passengers's judgement in emergency. In addition, stairway enclosures are not to have direct access to passenger spaces, crew spaces, spaces for the stowage of fireman's outfit, etc. or enclosed spaces containing combustibles of fire risk.

(c) Escape routes from machinery spaces of category A

For ships of less than 1,000 gross tonnage, the escape routes from machinery spaces of category A may be of two exits and two sets of ladders widely separated each other as far as practicable notwithstanding the requirements of 10.2.3(a)(i) and 10.2.3(a)(ii) of this Part.

(d) Means of escape from a machinery control room located within a machinery space is to be 1 or more notwithstanding the requirements of 10.2.3(a)(iv) of this Part.

14-1.10.2 Ships of Grade II

(a) Marking of escape routes

Notwithstanding the requirements of 10.2.2(b)(v) of this Part:

Passenger ships other than Ro-Ro passenger ships may not be provided with low location lighting systems and fire equipment location markings on escape route. For Ro-Ro passenger ships of less than 1,000 gross tonnage, escape instruction and fire equipment location markings on escape route may not be of photoluminescent material nor marked by lighting.

(b) Escape routes from machinery spaces of category A

The escape routes from machinery spaces of category A may be of two exits and two sets of ladders widely separated each other as far as practicable notwithstanding the requirements of 10.2.3(a)(i) and 10.2.3(a)(ii) of this Part.

(c) Emergency escape breathing devices (EEBDs)

The EEBDs are to comply with the following (i) to (iv) notwithstanding the requirements of 10.2.2(d) and 10.2.3(c) of this Part:

(i) Passenger ships of less than 1,600 gross tonnage need not be provided with EEBDs.

(ii) For passenger ships of 1,600 gross tonnage or more, 2 sets of EEBDs are to be provided for machinery spaces containing internal combustion machinery used for main propulsion.

(iii) Where the accommodation spaces are not located under the lowest open deck and have escape routes direct to open decks at each deck level, EEBDs are not required for such spaces.

(iv) In addition to the provisions of (ii) above, 1 set of spare EEBD is to be provided.

14-1.11 Operational Requirements

For Ships of Grade I and Ships of Grade II, the requirements relating to fire control plans may not apply as deemed appropriate by the Society.

14-1.12 Alternative Design and Arrangements

The provisions in Chapter 12 may be referred for both Ships of Grade I and Ships of Grade II.

14-1.13 Special Requirements

14-1.13.1 Ships of Grade I

(a) In lieu of the requirements of construction for fire protection specified in 13.1 to 13.3 of this Part, the following requirements are to apply:

(i) Helicopter Facilities

The helicopter winching deck (a winching area for helicopter on a weather deck) provided in Ro-Ro passenger ships are to comply with the requirements specified in 13.1 of this Part.

(ii) Protection of vehicle, special category and Ro-Ro spaces

(1) The fire integrity of bulkheads and decks at boundaries adjacent to special category spaces is to comply with Table IX 14-1-3 notwithstanding the requirements of 13.3.4 of this Part.

(2) 13.3.1(b)(i), 13.3.1(b)(iii) and 13.3.2 of this Part.

(b) Unless otherwise specified as follows, the requirements of fire detection and extinction in 13.1 to 13.3 of this Part are to apply.

(i) Helicopter Facilities

For Ro-Ro passenger ships, the fire fighting appliances specified in 13.1.4 of this Part are to be provided on the helicopter winching deck.

(ii) Fixed fire-extinguishing systems in special category spaces

A fixed high-expansion foam fire-extinguishing system may be provided as a fixed fire-extinguishing system in the special category space notwithstanding the requirements of 13.3.5(a)(ii) and 13.3.5(a)(iii) of this Part.

14-1.13.2 Ships of Grade II

(a) In lieu of the requirements of construction for fire protection specified in 13.1 to 13.3 of this Part, the following requirements are to apply:

(i) Protection of vehicle, special category and Ro-Ro spaces

13.3.2(a)(i)(1), 13.3.2(a)(ii)(1), 13.3.2(a)(ii)(3), 13.3.2(a)(v), 13.3.2(b) and 13.3.2(c) of this Part. However, for 13.3.2(a)(v), spaces in a superstructure above cargo spaces or accommodation spaces, service spaces or control stations in a deckhouse may be excluded.

(b) Unless otherwise specified as follows, the requirements of fire detection and extinction in 13.1 to 13.3 of this Part are to apply.

(i) Fixed fire-extinguishing systems in special category spaces

A fixed high-expansion foam fire-extinguishing system may be accepted as a fixed fire-extinguishing system in special category spaces notwithstanding the requirements of 13.3.5(a)(ii) and 13.3.5(a)(iii) of this Part.

(ii) Manually operated call points & Portable fire extinguishers

13.3.3(c)(ii) and 13.3.5(b)(ii) of this Part may not apply as deemed appropriate by the Society.

Chapter 14-2

Ships not Engaged on International Voyages: Cargo Ships Other than Tankers

14-2.1 General

14-2.1.1 Application

(a) The requirements of this Chapter apply to cargo ships not engaged on international voyages, including:
  (i) cargo ships of 500 gross tonnage and upwards;
  (ii) cargo ships of less than 500 gross tonnage but not less than 100 gross tonnage; and
  (iii) cargo ships of less than 100 gross tonnage.

(b) Requirements of Chapter 14 are also to be complied with.

14-2.1.2 Dangerous goods - chemicals, and/or liquefied gasses in bulk
Ships carrying dangerous goods - chemicals, and/or liquefied gasses in bulk, are to comply with IMDG, IGC, and IBC Codes, as applicable.

14-2.1.3 Special consideration
Where the requirements of this Chapter are impractical to a ship (e.g., considering the ship's type, size and service area), special consideration may be given by the Society.

14-2.2 Requirements for Cargo Ships of 500 Gross Tonnage and Upwards

The requirements from Chapter 2 to Chapter 13 of this Part are to apply to cargo ships of 500 gross tonnage and upwards unless otherwise specified/modified as follows:.

14-2.2.1 Notwithstanding the provisions of 2.1.2(c)(v)(1)a) of this Part, the Society may dispense with an additional oil-level gauge.

14-2.2.2 The requirements of 2.1.2(e)(ii) of this Part relating to the protection of high-pressure oil fuel piping is not to apply to diesel engines having a maximum continuous output of less than 375 kW, and installed in the space other than machinery spaces of category A, provided that a suitable enclosure for the fuel injection piping system on such a engine is fitted.

14-2.2.3 Notwithstanding the provisions of 8.1.1(g)(i) of this Part, the international shore connection need not be provided.

14-2.2.4 Notwithstanding the provisions of 8.2.3(a) of this Part, the spare charges are to be provided for 10% of the total fire extinguishers.

14-2.2.5 Notwithstanding the provisions of 11.2.3 of this Part, the exhibition and the storage of the fire control plans and a booklet containing such plans may be dispensed with by the Society.

14-2.2.6 Notwithstanding the provisions of 11.1.3(b) and 11.3.1(a) of this Part, the contents of the fire safety operational booklets and the maintenance plan are to be limited to those for installations other than the following equipment:

(a) automatic sprinkler systems;

(b) fixed inert gas systems; and

(c) fire detection and fire alarm systems.

14-2.3 Requirements for Cargo Ships of less than 500 Gross Tonnage but not less than 100 Gross Tonnage

The requirements from Chapter 2 to Chapter 13 of this Part are to apply to cargo ships of less than 500 gross tonnage but not less than 100 gross tonnage, unless otherwise specified/modified as follows:

14-2.3.1 The requirements specified in 14-2.2 are to apply.

14-2.3.2 The following (a) to (c) requirements relating to fire protection may be applied in lieu of the provisions of 2.3.3, 2.3.4, 2.4.1, 2.4.2, 3.2, Chapter 4, 6.1, 6.3, Chapter 7 (except 7.4.2 and 7.5), 9.1, 9.2.1(b), 9.3, 13.3.2(a) and 13.3.2(e) of this Part.

(a) Boundary walls of machinery spaces of category A (including doors) and the floor plating of normal passageways in such machinery spaces are to be of steel or other equivalent material. The doors in such boundary walls are to be of self-closing type.

(b) In ships provided with vehicle spaces including ro-ro spaces intended for carriage of motor vehicles with fuel in their tanks for their own propulsion, the following requirements are to be complied with.
   (i) The bulkheads and decks which consist of the boundaries of such spaces, machinery spaces and galleys are to be of the divisions specified in Table IX 7-5 and Table IX 7-6 corresponding to adjacent spaces.
   (ii) The requirements specified in 2.3.3 of this Part are to apply to the boundaries of such spaces, machinery spaces and galleys.
   (iii) In case where equivalent fire integrity as in A class divisions is required for shell plating and other walls in accordance with the provisions of 14-2.3.2(b)(i) above, no windows nor side scuttles are to be provided therein.
   (iv) The requirements specified in 7.2.1, 7.2.3, 7.3.2(a) and 7.3.2(b) of this Part are to apply to the boundaries required to have fire integrity in accordance with the provisions of 14-2.3.2(b)(i) above.

(c) In ships provided with closed vehicle spaces including closed ro-ro spaces intended for carriage of motor vehicles with fuel in their tanks for their own propulsion, the requirements of 13.3.2(a) (excluding 13.3.2(a)(iii)) of this Part are to apply in addition to 14-2.3.2(b) above.

14-2.3.3 Protection of high-pressure oil fuel piping

The requirements of 2.1.2(e)(ii) of this Part relating to the protection of high-pressure oil fuel piping may not apply to diesel engines having a maximum continuous output of less than 375 kW, and installed in the space other than machinery spaces of category A, provided that a suitable enclosure for the fuel injection piping system on such a engine is fitted.

14-2.3.4 Means of isolating the fuel supply and spill piping

The requirements of 2.1.2(e)(v) of this Part relating to the means of isolating the fuel supply and spill piping to individual engines may not apply to such ships.

14-2.3.5 Secondary means for pressure/vacuum relief

The requirements of 2.4.3(b)(iii) and 9.5.3(b) of this Part relating to the secondary means for pressure/vacuum relief may not apply to such ships.

14-2.3.6 Independent fire pump

Notwithstanding the provisions of 8.1.2(b) of this Part, ships of less than 150 gross tonnage may dispense with the independent fire pump, provided that one power pump is available as a main fire pump.

14-2.3.7 Arrangement of fire pumps and fire mains & storage rooms of fire extinguishing medium

The requirements specified in 8.1.2(c)(ii) to 8.1.2(c)(iii) of this Part may not apply. Notwithstanding the provisions of 8.3.3 of this Part, such storage rooms may be not treated as fire control stations.

14-2.3.8 Notwithstanding the provisions of 8.7 and 8.8 of this Part, the fire extinguishing arrangements for tankers may be to the satisfaction of the Society.

14-2.3.9 Fixed gas fire-extinguishing systems for dangerous goods

The requirements of 8.6.2 of this Part need not apply.

14-2.3.10 Emergency escape breathing devices

The requirements of 10.2.2(d) and 10.2.3(c) of this Part relating to emergency escape breathing devices may not apply.

14-2.4 Requirements for Cargo Ships of less than 100 Gross Tonnage

Statutory requirement specified in 14.1.2 are to be applied to cargo ships of less than 100 gross tonnage. The requirements of 14-2.3 may be applied as deemed necessary by the Society.

Chapter 14-3

Ships not Engaged on International Voyages: Tankers

14-3.1 General

14-3.1.1 Application

(a) In principle, tankers not engaged on international voyages are to comply with the requirements of Chapter 2 to Chapter 13.

(b) Requirements of Chapter 14 are also to be complied with.

14-3.1.2 Dangerous goods - chemicals, and/or liquefied gasses in bulk

Ships carrying dangerous goods - chemicals, and/or liquefied gasses in bulk, are to comply with IMDG, IGC, and IBC Codes, as applicable.

14-3.1.3 Special consideration

Where the requirements of this Chapter are impractical to a ship (e.g., considering the ship's type, size and service area), special consideration may be given by the Society.

Tel: *+886 2 25062711*
Fax: *+886 2 25074722*
E-mail: *cr.tp@crclass.org*
Website: *http://www.crclass.org*
© CR – All rights reserved

財團法人驗船中心
CR CLASSIFICATION SOCIETY

RULES FOR THE CONSTRUCTION AND CLASSIFICATION OF STEEL SHIPS 2022

PART X – REFRIGERATED CARGO INSTALLATIONS

July 2022

財團法人驗船中心
CR CLASSIFICATION SOCIETY

RULES FOR THE CONSTRUCTION AND CLASSIFICATION OF STEEL SHIPS 2022

PART X – REFRIGERATED CARGO INSTALLATIONS

July 2022

RULES FOR THE CONSTRUCTION AND CLASSIFICATION OF STEEL SHIPS

PART I CLASSIFICATION AND SURVEY

PART II HULL CONSTRUCTION AND EQUIPMENT

PART III SPECIAL SERVICE AND TYPE OF SHIPS

PART IV MACHINERY INSTALLATIONS – CONSTRUCTION AND SHAFTING

PART V BOILERS, PRESSURE VESSELS, THERMAL OIL HEATERS AND INCINERATORS

PART VI PIPING AND PUMPING SYSTEMS

PART VII ELECTRICAL INSTALLATIONS

PART VIII AUTOMATIC OR REMOTE CONTROL AND MONITORING SYSTEMS

PART IX FIRE PROTECTION, DETECTION AND EXTINCTION

PART X REFRIGERATED CARGO INSTALLATIONS

PART XI MATERIALS

PART XII WELDING

PART XIII NAVIGATIONAL SAFETY SYSTEMS

PART XIV GOAL-BASED SHIP CONSTRUCTION STANDARDS SHIPS

PART XV HULL CONSTRUCTION AND EQUIPMENT FOR SHIPS LESS THAN 90 M IN LENGTH

List of major changes in Part X from 2019 edition

Acronyms

AIS	Automatic Identification System
ANTS	Automatic Navigation and Track-keeping System
ARPA	Automatic Radar Plotting Aid
BC Code	Code of Safe Practice for Solid Bulk Cargoes
BNWAS	Bridge Navigational Watch Alarm System
CA	Controlled Atmosphere
CDI	Chemical Distribution Institute
COW	Crude Oil Washing
CPA	Closest Point of Approach
CPP	Controllable Pitch Propeller
CSC	International Convention for Safe Containers
CSR	Common Structural Rules
CTOD	Crack Tip Opening Displacement
ECDIS	Electronic Chart Display and Information System
EEBD	Emergency Escape Breathing Devices
ENC	Electronic Navigational Chart
ESP	Enhance Survey Plan
ETA	Emergency Towing Arrangement
FEU	Forty-foot Equivalent Unit
FMEA	Failure Mode & Effect Analysis
FRP, GRP	Fibreglass Reinforced Plastics
FTP Code	International Code for Application of Fire Test Procedures
GBS	Goal-Based ship construction Standards
GDC	General Dry Cargo
GLONASS	Global Navigation Satellite System
GMDSS	Global Maritime Distress and Safety System
GPS	Global Positioning System
HAZ	Heat Affected Zone
HHP anchor	High Holding Power anchor
HSC	High Speed Craft
HTS	High Tensile Steel
IACS	International Association of Classification Societies
IBC Code	International Code for the Construction and Equipment of Ships Carrying Dangerous Chemicals in Bulk

ICS	The International Chamber of Shipping
IEC	International Electrotechnical Commission
IGC Code	International Code for the Construction and Equipment of Ships Carrying Liquefied Gases in Bulk
ILO	International Labour Organization
IMDG Code	International Maritime Dangerous Goods Code
IMO	International Maritime Organization
ISO	International Standards Organization
LAN	Local Area Network
LCS	Loading Computer System
LEL	Lower Explosive Limit
LRIT	Long-range Identification and Tracking of ships
MARPOL	International Convention for the Prevention of Pollution from Ships
MARVS	Maximum Allowable Relief Valve Setting
MEPC	Marine Environment Protection Committee
MLC	Maritime Labour Convention
MSC	Maritime Safety Committee
NDT	Nondestructive Testing
OCIMF	The Oil Companies International Marine Forum
OOW	Officer Of the Watch
PA	Public Address
PMA	Permanent Means of Access
PMS	Planned Machinery Maintenance Scheme
RH	Relative Humidity
PSPC	Performance Standard for Protective Coating
SENC	System Electronic Navigational Chart
SHHP anchor	Super High Holding Power anchor
SOLAS	International Convention for the Safety of Life at Sea
SRE	Ship Recycling
STCW	International Convention on Standards of Training, Certification and Watch-keeping for Seafarers
STS operation	Ship-To-Ship operation
S-VDR	Simplified Voyage Data Recorder
TCPA	Time to CPA
TEU	Twenty-foot Equivalent Unit
THD	Total Harmonic Distortion

TMCP	Thermo-Mechanical Controlled Processing
UPS	Uninterruptible Power Supply
VDR	Voyage Data Recorder
VEC	Vapor Emission Control

RULES FOR THE CONSTRUCTION AND CLASSIFICATION OF STEEL SHIPS

PART X
REFRIGERATED CARGO INSTALLATIONS

CONTENTS

Chapter 1 General Requirements 1

1.1 General 1
1.2 Class Symbols and Notations and Temperature Conditions 1
1.3 Definitions 2
1.4 Plans and Particulars 3
1.5 Materials 5
1.6 Equipment to be Constructed under Survey 5
1.7 Type Approved Equipment 6
1.8 Heat Balance Test 6
1.9 Spare Gear and Refrigerant Charge 6

Chapter 2 Design Criteria 7

2.1 General 7
2.2 Refrigerants and Classes of Pipes 7
2.3 Refrigeration Units 8
2.4 Refrigeration Capacity 8
2.5 Design Pressures 9
2.6 Insulation 10

Chapter 3 Storage Compartments for Refrigerating Machinery and Refrigerant 12

3.1 General 12
3.2 Arrangements for Compartments Housing Machinery Using Ammonia 12
3.3 Gas Storage Compartments 14
3.4 Compartments Housing Carbon Dioxide Containing Equipment 15

Chapter 4 Refrigeration Plant, Pipes, Valves and Fittings 16

4.1 General Requirements for Refrigerating Compressors 16
4.2 Reciprocating Compressors 17

4.3 Screw Compressors 20
4.4 Pressure Vessels and Heat Exchangers 20
4.5 Condensers, Oil Coolers and Evaporators 20
4.6 Liquid Receivers and Oil Separators 21
4.7 Air Coolers and Cooling Grids 21
4.8 Refrigerant Pumps 22
4.9 Condenser Cooling Water Pump 22
4.10 Piping Systems and Joints 22
4.11 Liquid level Indicators 23
4.12 Automatic Expansion Valves 24
4.13 Overpressure Protection Devices 24
4.14 Filters, Driers and Moisture Indicators 27
4.15 Purging Devices 27
4.16 Pressure Testing at Manufacturer's Works 27
4.17 Refrigerant Piping Pressure Test after Installation on board Ship 27

Chapter 5 Refrigerated Cargo Spaces 29

5.1 Air Tightness of Refrigerated Spaces 29
5.2 Insulation Systems 29
5.3 Insulation Access Plugs and Panels 31
5.4 Air Circulation and Distribution 31
5.5 Air Refreshing Arrangements 31
5.6 Piping in way of Refrigerated Spaces 32
5.7 Drainage from Refrigerated Spaces 32
5.8 Corrosion Protection of Metal Fixtures 33
5.9 Heating Arrangements for Fruit Cargoes 33

Chapter 6 Controlled Atmosphere (CA) Systems 34

6.1 General 34
6.2 Definitions 34
6.3 Additional Information and Plans 35
6.4 CA Zones and Adjacent Spaces 37
6.5 Gas Systems 38
6.6 Relative Humidity (RH) 40
6.7 Electrical Installation 40
6.8 Control Instrumentation and Alarms 40
6.9 Safety Requirements 42
6.10 Inspection and Testing on Completion 42

Chapter 7 Container Ships fitted with Refrigerating Plant to Supply Refrigerated Air to Insulated "Port Hole" Containers in Ship's Holds 44

7.1 General 44
7.2 Additional Information and Plans 44
7.3 Air Coolers 44
7.4 Air Duct Systems 45

7.5 Duct Air Leakage and Distribution Tests 45
7.6 Cell Air Conditioning Arrangements 46

Chapter 8 Carriage of Refrigerated Containers (CRC) 47

8.1 General Requirements 47
8.2 Definitions 47
8.3 Plans and Particulars 48
8.4 Ventilation and Hold Temperature 50
8.5 Electrical, including Container Plug-in Sockets 52
8.6 Instrumentation, Control and Alarm Systems 54
8.7 Hold Access and Maintenance Access Arrangements 55
8.8 Water Cooler for Refrigeration Units 55
8.9 Deck-stowed Refrigerated Containers 56
8.10 Inspection and Testing on Completion 56
8.11 Spare Gear 58

Chapter 9 Electrical Installation 59

9.1 General 59
9.2 Electrical Equipment for Use in Explosive Gas Atmospheres 59

Chapter 10 Instrumentation, Control, Alarm, Safety and Monitoring Systems 60

10.1 General 60
10.2 Instrumentation 60
10.3 Control, Alarm and Safety Systems 61
10.4 Temperature Monitoring and Recording 62
10.5 Refrigerant Detection Systems 62
10.6 Ammonia Vapour Detection and Alarm Equipment 63

Chapter 11 Personnel Safety Equipment and Systems 64

11.1 Personnel Safety Equipment 64
11.2 Personnel Warning Systems 64

Chapter 12 Acceptance Trials 66

12.1 Tests after Completion 66
12.2 Thermographic Survey 66
12.3 Thermal Balance Test 66
12.4 Acceptance Tests 67
12.5 Sea Trials 67

12.6 Reporting of Tests 68

Chapter 1
General Requirements

1.1 General

1.1.1 The ship built under the requirements of this Part or with equivalent alternatives approved by the Society will, at request, be certified and assigned with the Classification symbols and notations as described in 1.4 of Part I so long as it is found upon survey to be maintained in such efficient condition as prescribed in 2.8 of Part I and satisfactory to the Surveyor.

1.1.2 In the case of the refrigerating machinery and appliances designed for the purpose of cooling down of cargoes on board, or to permit quick-freezing of fish in specified condition, a statement is to be required to describe the capacity upon application to the Society for advice and consideration. A descriptive note stating the capacity in excess that of refrigerating machinery and appliances for this duty will be entered in the certificate.

1.1.3 The requirements of this Part are to cover the refrigerating machinery and appliances in connection with the space to be used for the carriage of refrigerated cargo on the ship intended for unrestricted service. However, the Society is prepared to give consideration to ships engaged on voyages of short duration, to the appliances of small capacity, or of special services, or to other special circumstances.

1.1.4 A certificate is to be issued for the ship stated in 1.1.1, 1.1.2 and 1.1.3 above giving the number and stated capacity of the refrigerated cargo chambers together with their approved minimum carrying temperatures, the characteristics of the insulation and a description of the refrigerating machinery.

1.1.5 Where the machinery construction of the cargo refrigerating machine and appliances is novel in design or involves the use of unusual material, special consideration in each case is to be required.

1.1.6 Where it is intended to install a **CA** (Controlled Atmosphere) system on a refrigerated cargo ship intended for classification and to request a **CA** notation, the requirements of Chapter 6 of this Part are to be complied with, and it is a prerequisite that the refrigeration installation on board be assigned an **RMS** class.

1.1.7 For container ships with approved refrigerating machinery and appliances to supply refrigerated air through ducting to insulated "Port Hole" containers carried in holds, the certificate is to specify additionally the maximum number and characteristics of the containers which may be carried.

1.1.8 Where a **CRC** (Carriage of Refrigerated Containers) notation is requested by an Owner, on a container ship intended for classification, the requirements of Chapter 8 of this Part are to be complied with. The classification symbol **RMS** is not necessarily required when **CRC** notation assigned.

1.1.9 The class notations assigned will additionally specify the temperature conditions and other relevant characteristics which the equipment has been approved.

1.2 Class Symbols and Notations and Temperature Conditions

1.2.1 The class symbols and notations assigned will state the minimum temperature or a temperature range approved by the Committee for the refrigerating installation with the maximum sea temperature stated.

1.2.2 An example of a typical class symbol on a refrigeration installation classed with the Society built under Special Survey, would be:

"**RMS ✠** to maintain temperatures of -29°C to +14°C with sea temperature +32°C maximum"

1.2.3 An example of a typical class symbol and **CA** notation on a refrigeration installation classed with the Society, fitted with a CA system built under Special Survey, would be:

"RMS ✠ CA(1~12% O_2, 0~25% CO_2, 50% RH)"

1.2.4 For refrigerated installations aboard container ships with approved refrigerating plant and arrangements to supply refrigerated air through ducting to insulated "Port Hole" containers, the class symbol and notation assigned will additionally specify the maximum number and characteristics of the containers for which the plant is approved:

"**RMS** to supply cooled air at temperatures of -25°C to +14°C to 800 certified 'Port Hole' insulated containers with an average thermal transmittance per container of 27 W/K with sea temperature +32°C maximum"

1.2.5 An example of a typical class **CRC** notation for a container ship classed with the Society, fitted with a ventilation system and electrical plug-in points for deck and hold stowed refrigerated containers built under Special Survey, would be:

"**CRC (230/140)** to maintain an amount of 230 hold-stowed and 140 deck-stowed refrigerated containers operating at their design condition with a 24 hour average external ambient air temperature of +35°C"

"**CRC (2,800 kW, 60%/40%)** provided with a power generating capacity of 2,800 kW dedicated to supplying the container plug-in points, and with the stowage ratio of 60% deep frozen and 40% chilled cargoes"

1.2.6 For reliquefaction or refrigerating plants aboard liquefied gas carriers, the notation assigned will state the minimum cargo temperature for which the installation is approved, unless otherwise qualified.

1.2.7 On application from an Owner, consideration will be given by the Committee to an alternative temperature notation being assigned to that appearing in the Register Book.

1.3 Definitions

1.3.1 **Refrigerating machinery spaces** mean spaces dedicated for housing refrigerating machinery and the associated equipment.

1.3.2 **Refrigeration unit** means the machinery comprising the compressor, the compressor's driving motor and a condenser, if fitted, independent of any other refrigeration machinery for provision stores or the air conditioning plant. In indirect refrigeration systems, the refrigeration unit also includes a brine or other secondary refrigerant cooler.

1.3.3 **Refrigeration system** means a refrigeration system comprising one or more refrigeration units, together with the piping and ducting system as well as the equipment necessary for cooling the cargo and maintaining it at the required temperature.

1.3.4 **Direct expansion** means a refrigeration system, in which the refrigerant expansion occurs through the direct absorption of heat from the primary medium to be cooled.

1.3.5 **Indirect expansion** means a refrigeration system, in which a secondary refrigerant is cooled by the direct expansion of a primary refrigerant and is then circulated to cool the medium which absorbs heat from the space to be cooled.

1.3.6 **Refrigerant** means the fluid used for heat transfer in a refrigeration system, which absorbs heat at a low temperature and low pressure of the fluid and rejects heat at a higher temperature and higher pressure of the fluid, usually involving a change of state of the fluid during the process.

1.3.7 **Secondary refrigerant** means a liquid used for the transmission of heat, without a change of state, and having either no flash point or above +66°C.

1.3.8 **Brine** means a term given to secondary refrigerants which are water solutions of calcium chloride, sodium chloride and magnesium chloride.

1.3.9 **Controlled atmosphere (CA) system** means a gastight system that the O_2 concentration in the cargo space is reduced and the CO_2concentration adjusted to the required levels by the introduction of high purity nitrogen or other suitable gas, or the relative humidity controlled, in order to retard the metabolic process and extend the life of fresh products cargoes as subsidiary installations for cargo refrigerating installations. The oxygen and CO_2 concentrations or relative humidity within the cargo space are then monitored and controlled throughout the loaded voyage.

1.3.10 **Refrigerated container** means a standard container designed and constructed to a recognized international standard and primarily intended for carrying refrigerated cargo, and which is adequately insulated to reduce heat loss through the boundary walls and made air tight through effective seals; and also with an individual refrigeration unit either permanently installed or portable and requiring an electrical power supply, and where necessary, a cooling water supply from the vessel.

1.3.11 **Insulated "Port Hole" container** means the insulated container where the cargo contained therein is cooled by cold air circulated by the vessel's refrigeration system through flexible ducting connections to the "Port Holes" located on the container end wall.

1.3.12 **Refrigerated fish carrier** means fish processing vessels, fishing vessels and mother ships of fishing fleet which are provided with facilities for freezing fish and fish products.

1.4 Plans and Particulars

1.4.1 Where the refrigerating machinery and appliances are to be built under the supervision of the Society, the following plans and particulars are to be submitted for approval before the construction and installation are commenced:

(a) Schematic plans, including full particulars of piping and instrumentation, for:
- (i) Primary and secondary refrigeration systems.
- (ii) Air cooler defrosting arrangements.
- (iii) Gas reliquefaction systems.
- (iv) Condenser cooling water systems.

(b) Detailed dimensioned plans and material specifications, for:
- (i) Reciprocating compressor crankshaft and crankcase exposed to refrigerant pressure.
- (ii) Rotary type compressor rotors and casing.
- (iii) Condensers shell and tube and plate type.
- (iv) Evaporators shell and tube and plate type.
- (v) Arrangements of air coolers and air cooling pipe grids and construction method.
- (vi) Liquid receivers, oil separators, and any other pressure vessels.

(c) General arrangement of refrigerating machinery compartment in elevation and plan, showing location and arrangement of the plant, ventilation details and location of temperature sensors and vapour detectors.

(d) Details of automatic controls, alarms and safety systems.

(e) Details of level indicators.

(f) Where provision is made for the manufacture and/or storage of inert gas in liquid form, details of the storage vessel insulation arrangements and the reliquefaction equipment and piping system are to be submitted.

(g) Capacity calculations for pressure relief valves and/or bursting discs, and discharge pipe pressure drop calculations.

(h) Programme of tests to be conducted on completion of the installation.

1.4.2 The following plans and particulars, as applicable, and any others which may be specially requested for refrigerated cargo spaces, are to be submitted for approval, before work is commenced:

(a) Specification of proposed insulation system, including physical, thermal and fire properties.

(b) General arrangement of insulated refrigerated spaces in elevation and plan.
   (i) The plans are to be to a scale adequate for the measurement of the external surfaces and the deck and bulkhead edges.
   (ii) Dimensions and spacing of frames, beams and stiffeners, and details of other steel work intruding into the insulation and within the spaces, are to be shown.
   (iii) Oil fuel and liquid cargo tanks adjacent to or below the refrigerated spaces are to be shown, and whether heating arrangements are provided for such tanks are to be indicated.
   (iv) Ventilating and air conditioning trunks, and ducts passing through refrigerated spaces are to be shown.
   (v) The plans are to include a diagram showing the position of the spaces in relation to other parts of the ship if this is not otherwise apparent.

(c) Plans showing
   (i) The thickness and methods of attachment of the insulation and linings on all surfaces including girders, hatch coamings and pillars.
   (ii) Details of prefabricated panels and their fixings, vapour barriers, insulated doors and hatch access, bilge and manhole plugs etc.

(d) Methods of attachment of air cooling grids (if fitted) are to be indicated.

(e) Size and position of refrigerated space pressure equalizing devices, where fitted.

(f) Arrangements of the drainage system, and sounding and air pipes that pass through the refrigerated spaces.

(g) Arrangements of air ducts and distribution systems within the refrigerated spaces (including method of cooling spaces within hatch coamings), and air cooler spaces showing location of the coolers and their fans and driving motors.

(h) Details of temperature indicating, and recording and sensing equipment, and arrangement of sensors within the refrigerated spaces.

1.4.3 Where the existing refrigerating machinery and appliances are intended to be classed to the Society with the symbol of **RMS✠** or **RMS**, the following are to be submitted:

(a) Where a refrigerating installation not built under the Society's survey is intended to be classed, plans and particulars as listed in 1.4.1 and 1.4.2 are, if applicable, to be submitted for approval.

(b) Performance test records of various components and on board test records prepared at the time of completion, if available, are also to be forwarded to the Society for consideration.

1.5 Materials

1.5.1 Steel plating used in ship construction is to be of an appropriate grade corresponding to the proposed temperature notation.

1.5.2 Materials used in the construction of the refrigerating equipment and associated systems are to be generally manufactured and tested in accordance with the requirements of the Rules of Part XI Materials.

1.5.3 Where it is proposed to use materials other than those specified in the Rules of Part XI Materials, details of the chemical compositions, heat treatment and mechanical properties are to be submitted for approval. In such cases the values of the mechanical properties used for deriving the allowable stress are to be subject to agreement with the Society.

1.5.4 All materials used in refrigerating equipment and systems are to be suitable for use with the selected refrigerants. This includes joints, sealing materials and lubricants. For example, the following materials and refrigerants are not to be combined:

(a) Copper not with ammonia.

(b) Magnesium not with fluorinated hydrocarbons.

(c) Zinc not with ammonia or fluorinated hydrocarbons.

1.5.5 For ammonia systems, the condensers and/or evaporators are to be manufactured in titanium or a suitable grade of stainless steel.

1.6 Equipment to be Constructed under Survey

1.6.1 All major items of equipment are to be surveyed at the manufacturer's works. The workmanship is to be to the Surveyor's satisfaction and the Surveyor is to be satisfied that the components are suitable for the intended purpose and duty. Examples of such units are:

(a) Crankshafts, crankcases, rotor shafts and casings for all compressors.

(b) Condensers.

(c) Evaporators (secondary refrigerant coolers).

(d) Air coolers.

(e) Pressure vessels (e.g. liquid receivers, surge drums, suction separators, intercoolers, oil separators).

(f) Cooling water pumps for condensers.

(g) Valves and other components intended for installation in pressure piping systems having a maximum working pressure greater than 0.7 MPa.

(h) Thermal insulating panels (factory made).

1.7 Type Approved Equipment

1.7.1 Where it is proposed to use components (e.g. compressors, condensers, oil separators) which have been type approved by the Society and with valid Type Approval Certificates, the types and model numbers of the components are to be stated. Plans of components that have been so approved need not be re-submitted.

1.8 Heat Balance Test

1.8.1 A heat balance test will be required as prescribed in 12.3 on a classed installation, or one being considered for reclassification, when extensive repairs or alterations have been carried out, or when the Surveyors consider that temperature condition is to be amended.

1.9 Spare Gear and Refrigerant Charge

1.9.1 Adequate spares, together with the tools necessary for maintenance or repair, be carried. The spares are to be determined by the Owner according to the design and intended services. The maintenance of the spares is the responsibility of the Owner.

1.9.2 For systems complying with 2.5.6, sufficient CO_2 is to be carried on board to allow the refrigeration system to be fully recharged. In addition, adequate reserve supplies of refrigerant are to be carried for maintenance purposes. The replacement refrigerant is to be stored in containers complying with 3.3.6.

Chapter 2
Design Criteria

2.1 General

2.1.1 The proposed refrigerating plant, insulation and refrigerants are to be suitable for achieving the designed notation temperature. The refrigerating machinery and all components are to operate satisfactorily under the intended ambient operating conditions.

2.1.2 The properties of steel materials used in refrigerated holds are to be suitable for the proposed notation temperature.

2.1.3 An effective defrosting system suitable for the service conditions and cargo carried is to be installed.

2.1.4 The ambient conditions for the system design are to be based on the following conditions:
Sea water temperature +32°C
Air temperature +35°C
Relative humidity 75%

2.2 Refrigerants and Classes of Pipes

2.2.1 The Rules are applicable to the primary refrigerants in Table X 2-1.

2.2.2 Attention is to be given to any statutory requirements, regarding the use of refrigerants, of the National Authority of the country in which the ship is to be registered.

2.2.3 Within the parameters of pressures, temperatures, toxic nature and flammability, the class of pipe to be used with various refrigerants is shown in Table X 2-1.

2.2.4 Design conditions as applicable to the classes of pipes are defined in 1.4 of Part VI.

2.2.5 The materials of Group I and II piping systems are to be manufactured at a works approved by the Society and tested in accordance with the appropriate requirements of Part XI Materials. Particular attention is drawn to 5.4 of Part XI, where testing requirements for pipes used for low temperature service are given.

2.2.6 The materials of Group III piping system are to be manufactured and tested in accordance with the requirements of acceptable National specifications. The manufacturer's test certificate will be acceptable and is to be provided for each consignment of materials.

Table X 2-1
Primary Refrigerants and Their Class of Pipes

Refrigerant	Type	Composition	Group of Pipe		
			I	II	III
R22	HCFC	-	-	√	-
R134a	HFC	-	-	-	√
R290 (Propane)	HC	-	-	√	-
R404A	Blend	R125, R134a, R143a	-	√	-
R407C	Blend	R32, R125, R134a	-	√	-
R410A	Blend	R32, R125	-	√	-
R507A	Blend	R125, R143a	-	√	-
R600a (Isobutane)	HC	-	-	√	-
R717(Ammonia)	NH_3	-	√	-	-
R744 (Carbon Dioxide)	CO_2	-	See 2.5.6		

Notes:
(1) HCFC-Hydro chlorofluorocarbon.
(2) HFC – Hydro fluorocarbon.
(3) HC - Hydrocarbon.
(4) In view of increasing world-wide restrictive legislation and phasing out of the refrigerant R22, it is recommended that this refrigerant is not to be used in any new installation.
(5) Although ozone depleting and global warming potentials are not included in the Rules for classification, these effects are important and need to be considered when selecting the refrigerant for a particular application.

2.2.7 Particulars of refrigerating systems using refrigerants other than those listed in Table X 2-1 will be given special consideration.

2.3 Refrigeration Units

2.3.1 A refrigerating unit is considered to comprise a compressor, its driving motor and one condenser. Where a secondary refrigerant, such as brine, is employed, the unit is also to include an evaporator (secondary refrigerant cooler) and a brine pump.

2.3.2 Two or more compressors driven by a single motor, or having only one condenser or evaporator (secondary refrigerant cooler) are to be regarded as one unit.

2.3.3 The refrigerating units of a classed cargo installation are to be completely independent of any refrigerating machinery associated with air conditioning plant, or any domestic refrigerated installation, or any process plant, unless full details of any proposal have been submitted and approved.

2.4 Refrigeration Capacity

2.4.1 The refrigeration capacity provided is to be sufficient to maintain the temperatures specified in the class notation when operating 24 hours per day with anyone unit on standby.

2.4.2 The plant is to be able to cool down a complete cargo to its carrying temperature within the time specified by the manufacturer. The standby unit may be considered as an operating unit during the cooling down period of a non-precooled cargo.

2.4.3 In order to compensate for deterioration of machinery and insulation over the life of the installation, the equipment is to be designed to have at least 5% excess capacity over that required for maximum design output.

2.4.4 The proposals of both machinery and insulating contractors will be evaluated by the Society in determining the theoretical capabilities of the equipment to maintain the duty temperatures. The Society will advise the contractors after appraisal of the specifications and plans if it is considered that additional refrigeration or insulating effect is required, but the temperature assigned on completion of the capacity heat balance test will be determined from the actual results of the test.

2.4.5 Where the units are not connected in common to all refrigerated chambers, the equipment serving each group of chambers is to comply with 2.4.1.

2.4.6 In the case of installations having a large number of small units arranged to serve individual chambers or groups of chambers, the question of standby capacity as required in 2.4.1 will be specially considered.

2.4.7 Where only two refrigerating units are fitted, the working parts are to be interchangeable.

2.4.8 Where a refrigerating plant is provided for subcooling the liquid refrigerant of other units, but is not arranged for cooling the cargo chambers independently, it will not be regarded as a unit.

2.5 Design Pressures

2.5.1 The design pressure of the system is to be regarded as equal to its maximum working pressure.

2.5.2 The maximum working pressure is the maximum permissible pressure within the system (or part system) in operation or at rest. No relief valve is to be set to a pressure higher than the maximum working pressure.

2.5.3 The design pressure of the low pressure side of the system is to be the saturated vapour pressure of the refrigerant at + 46°C. Due regard is to be taken of defrosting arrangements which may cause a higher pressure to be imposed on the low pressure system.

2.5.4 The minimum design pressure of the high pressure side of the system is to be 1.11 × Pb, where Pb is an allowance for the compressor high pressure cut-out. Pb is to be at least equal to 1.11 × Pa, where Pa is the condenser working pressure, when operating in tropical zones and equates to the saturation pressure at +46°C.

2.5.5 Design pressures applicable to refrigerants are to be not less than the values given in Table X 2-2 when condensers are sea-water cooled. The design pressure for other refrigerants is to be agreed with the Society.

2.5.6 Carbon dioxide as refrigerant

(a) Due to the low critical temperature of carbon dioxide it is inappropriate to determine the design pressure in accordance with 2.5.3. The proposed design pressure for a carbon dioxide system is to be stated, taking account of the maximum working pressure and the maximum pressure at rest conditions.

Table X 2-2
Minimum Design Pressures

Refrigerant	Pressure (MPa)	
	High Pressure Side	Low Pressure Side
R22	2.10	1.70
R134a	1.37	1.11
R290	1.85	1.50
R404A	2.53	2.05
R407C	2.40	1.94
R410A	3.31	2.99
R507A	2.58	2.09
R600a	0.65	0.53
R717	2.16	1.75
R744	See 2.5.6	

(b) Where the maximum pressure at rest condition is maintained by the fitting of a supplementary refrigeration unit, condensing the vapour in a holding vessel, supporting calculation is to be provided to show that this can be undertaken with a local ambient temperature of +45°C.

(c) The holding vessel is to be thermally insulated to prevent the operation of the relief devices within a 24 hour period after stopping the supplementary refrigeration unit at an ambient temperature of +45°C and an initial pressure equal to the starting pressure of the refrigeration unit.

2.5.7 Where a carbon dioxide system is designed for hot gas defrosting, due regard is to be given to the possibility of a higher pressure being imposed on the low pressure system. The design pressure for this section of the system is to be 10% above the maximum pressure experienced during defrosting.

2.6 Insulation

2.6.1 Properties of materials used for thermal insulation are to be verified against known standards for the following parameters, as applicable, to ensure that they are adequate for the intended service. The following test results are to be made available to the Society for approval:

(a) Closed cell content.

(b) Density.

(c) Mechanical properties.

(d) Thermal expansion.

(e) Abrasion.

(f) Cohesion.

(g) Thermal conductivity.

(h) Resistance to fire and flame spread.

(i) Ageing.

(j) Bonding (adhesive and cohesive strength).

2.6.2 Where the in situ foam type of insulation is proposed, full details of the process are to be submitted for approval.

2.6.3 Where applicable, having regard to their location and environmental conditions, insulation materials are to be:

(a) Suitably resistant to fire;

(b) Suitably resistant to the spreading of flame;

(c) Adequately protected against penetration of water vapour; and

(d) Adequately protected against mechanical damage.

Chapter 3

Storage Compartments for Refrigerating Machinery and Refrigerant

3.1 General

3.1.1 Refrigerating machinery is to be located in a well ventilated compartment. In general, the arrangements are to be such that all components of the refrigerating machinery can be readily opened up for inspection or replacement. Space is to be provided for the withdrawal and renewal of the tubes in "shell-and tube" type evaporators (brine coolers) and condensers. Proposals for alternative arrangements are to be submitted for consideration. See 3.2 for refrigerating machinery using ammonia.

3.1.2 Refrigerating machinery using toxic and/or flammable refrigerants is to be located outside the main machinery space in a separate gastight compartment.

3.1.3 Where the refrigerating machinery is located in a separate gastight compartment, outside the main machinery space, this compartment is to be equipped with effective mechanical ventilation to provide 30 air changes per hour based upon the total volume of the space. The mechanical ventilation is to have two main controls, one of which is to be operable from a place outside the compartment.

3.1.4 Means are to be provided for stopping the ventilation fans and closing the ventilation openings from a readily accessible position outside the compartment.

3.1.5 Refrigerating machinery using non-toxic and nonflammable refrigerants will not, in general, be required to be located in a separate compartment outside the main machinery space.

3.1.6 Openings for pipes, electrical cables and other fittings in the bulkheads and decks are to be fitted with gastight seals.

3.1.7 Ammonia piping is not to pass through accommodation spaces.

3.2 Arrangements for Compartments Housing Machinery Using Ammonia

3.2.1 Where ammonia refrigerant is used, the refrigerating machinery is to be installed in a dedicated gastight compartment. See also 3.2.9.

3.2.2 The compartment containing ammonia refrigerating machinery and any access ways to this compartment are to be provided with independent mechanical ventilation system capable of:

(a) Removing the heat generated by the equipment installed in the compartment;

(b) Maintaining the atmosphere in the compartment at acceptable vapour threshold levels under normal operating conditions; and

(c) Disposing of ammonia vapour safely and quickly in the event of a major leakage.

3.2.3 The ventilation system is to be of the negative pressure type where abnormal stoppages of the extraction fans are to activate an audible and visual alarm.

3.2.4 Compartments containing ammonia refrigerating machinery, including process vessels, are to be provided with:

(a) A negative ventilation system, independent of ventilation systems serving other spaces, having a capacity of not less than 30 air changes per hour based upon the total volume of the space. Other suitable arrangements which ensure an equivalent effectiveness may be considered;

(b) Fresh air inlets, located at a low level in the machinery compartment and arranged so as to provide a supply of fresh air and to minimize the possibility of re-cycling the exhaust air from the outlet;

(c) Exhaust outlets, located at a high level and arranged so as to promote good air distribution throughout the compartment;

(d) A fixed ammonia detector system with alarms inside and outside the compartment;

(e) Water screens above all access doors, operable manually from outside the compartment in all ambient conditions;

(f) An independent bilge system;

(g) An emergency drainage systems so as to immediately drain off the ammonia overboard in case of accident. Stop valves fitted in such pipes are to be situated outside the refrigerated machinery spaces and to be placed in a sealed box with glass window. The outlets of the drain pipes at the shipside overboard connection are to be of heavy grade and to be placed below the lightest waterline, and are to be provided with non return valves;

(h) The discharge piping line from safety relief valves on the ammonia side is to be led into the emergency drainage system or, if fitted, into the dump tank near the bottom of the tank;

(i) Where the charge is greater than 50 kg, emergency body shower and eye wash facilities are to be installed locally outside the compartment. The water for the shower is to be thermostatically controlled so as to avoid low temperature shock.

3.2.5 Access doors

(a) Compartments are to have at least two access doors located as far apart as possible, one of which is to be an emergency exit giving direct access to the open deck.

(b) In the case of small compartments where more than one door would be impractical, the emergency exit only is to be provided.

(c) The access doors are to be gastight and self closing with no holdback arrangements and are to open outwards from the refrigerated machinery spaces.

(d) The access doors are not to open to the accommodation spaces.

(e) The access doors are to be fitted with an easily operated opening mechanism to facilitate rapid escape in an emergency.

(f) Where one access is from a category “A” machinery space, it is to be fitted with double door separation having a minimum space of 1.5 m between each door. The doors are to be self closing and gastight with no holdback arrangements and the space between each door is to be provided with an independent ventilation system, the exhaust from which is to be led to atmosphere.

(g) Access corridors leading to the refrigerating machinery space are to be ventilated by means of an independent mechanical exhaust system.

3.2.6 At least two sets of self-contained breathing apparatus and protective clothing are to be provided, readily available in the vicinity of the compartment but external to the area of risk. See 11.1.4.

3.2.7 The location of the exhaust duct, from the compartment or area, is to be free from obstruction and be such as not to cause danger. Where practicable, they are to be at least 10 m in the horizontal direction from other ventilation intakes and openings to accommodation and other enclosed areas, and at least 2 m above the surrounding deck.

3.2.8 Ventilation fans are not to produce a source of vapour ignition in either the ventilated compartment/area or ventilation system. Ventilation fans and fan ducts, in way of fans only, are to be of non-sparking construction.

3.2.9 In the case of ammonia plants on fishing ships under 55 m overall length, or ammonia plants with a charge of ammonia not greater than 25 kg, the refrigerating machinery may be located in the main machinery space provided it complies with the following requirements:

(a) The entrance to the machinery space is properly illuminated and marked and has warning signs permanently posted.

(b) The area where the ammonia machinery is installed is served by a hood with a negative ventilation system, so as not to permit any leakage of ammonia dissipating into other areas.

(c) A water spray system is provided for the area.

(d) Coamings, of not less than 150 mm in height, are installed around the ammonia machinery area.

(e) A fixed ammonia detector system with alarms inside and outside the main machinery space is provided.

(f) Means are to be provided for stopping the ammonia compressor prime movers from a position outside the machinery space.

(g) At least two sets of self-contained breathing apparatus and protective clothing are to be provided readily available in the vicinity of the compartment but external to the area of risk. See 11.1.4.

(h) Air intakes of other machinery are located away from the ammonia machinery area as far as is practicable.

3.3 Gas Storage Compartments

3.3.1 Portable steel cylinders containing reserve supplies of refrigerant are to be stored in a well ventilated compartment reserved solely for this purpose.

3.3.2 The compartment is to be provided with a mechanical ventilation system providing 10 air changes per hour and is to have at least one door opening outwards giving direct access to open deck.

3.3.3 Bulk storage tanks holding more than 150 kg of replacement carbon dioxide are to be located in a separate compartment. The compartment is to be provided with a mechanical ventilation system having a minimum capacity of 6 air changes per hour. The ventilation system exhaust ducting is to remove air from the base of the compartment. The compartment is to be fitted with a gas tight access door opening outward.

3.3.4 The compartment is to be provided with a vapour detection system.

3.3.5 The compartment is to be provided with suitable water drainage arrangements not connected with the main machinery spaces.

3.3.6 Steel storage cylinders are to be of an approved type, supplied by the refrigerant manufacturer and are to be filled to a level suitable for an ambient temperature of + 46°C.

3.3.7 The compartment is to be provided with racks to facilitate secure stowage of the cylinders.

3.4 Compartments Housing Carbon Dioxide Containing Equipment

3.4.1 Self closing gas tight access doors are to be provided between each compartment and the dedicated escape routes. See 10.5.5.

3.4.2 In compartments which are normally occupied and where the volume of ventilation required by 3.1.3 is not desirable, such as production areas on fishing vessels, a negative pressure ventilation system, capable of 10 air changes per hour, is required to be fitted. This ventilation system is to be automatically activated when, in the event of a leak, the concentration of carbon dioxide reaches a predetermined level but in no case higher than the threshold limit value of 5,000 ppm.

Chapter 4

Refrigeration Plant, Pipes, Valves and Fittings

4.1 General Requirements for Refrigerating Compressors

4.1.1 New compressor types or developments of existing types are to be subjected to an agreed programme of type testing to complement the design appraisal and review of documentation.

4.1.2 Where it is proposed to treat the bearing surfaces either by local hardening or by chromium plating, then these processes are to be confined to the bearing area and not extended to the fillets. Particulars of the process are to be submitted for approval.

4.1.3 Where ball or roller bearings are incorporated, they are to have a minimum life expectancy of 25,000 running hours, for the application in question.

4.1.4 Where capacity control and off-loading devices are incorporated, arrangements are to be provided which indicate the extent of the off-loading being effected.

4.1.5 A check valve is to be fitted to each compressor discharge.

4.1.6 Stop valves are to be provided on compressor suctions and discharges.

4.1.7 A pressure relief valve and/or bursting disc is to be fitted between each compressor and its gas delivery stop valve in accordance with 4.13.5 and 4.13.6.

4.1.8 Suction strainers and lubricating oil filters are to be provided and so arranged that they are easily accessible for cleaning or renewal of the filter elements, without substantial loss of refrigerant or lubricating oil.

4.1.9 The correct direction of rotation is to be permanently indicated.

4.1.10 Where any hermetic or semi-hermetic compressor has the electric motor cooled by the circulating refrigerant, the following arrangements are to be provided:

(a) Refrigeration circuits are to contain no more than one hermetic or semi-hermetic compressor.

(b) Every compressor motor is to be fitted with a thermal cut-out device to protect the motor against overheating.

(c) In each refrigeration circuit containing a hermetic or semi-hermetic compressor, suitable arrangements are to be provided to remove debris and contaminants resulting from a motor failure. See 4.14.1.

(d) The pressure envelope of any hermetic or semi-hermetic compressor exposed to the refrigerant pressure is to be designed and constructed in accordance with the requirements of Part V, if applicable. Plans are to be submitted for consideration if required by Part V.

4.2 Reciprocating Compressors

4.2.1 The specified minimum tensile strength of castings and forgings for crankshafts is to be selected within the following general limits:

(a) Carbon and carbon-manganese steel castings
- 400 to 550 N/mm^2

(b) Carbon and carbon-manganese steel forgings (normalized and tempered)
- 400 to 600 N/mm^2

(c) Carbon and carbon-manganese steel forgings (quenched and tempered)
- not exceeding 700 N/mm^2

(d) Alloy steel castings
- not exceeding 700 N/mm^2

(e) Alloy steel forgings
- not exceeding 1000 N/mm^2

(f) Spheroidal or nodular graphite iron castings
- 370 to 800 N/mm^2

(g) Grey iron castings
- not less than 300 N/mm^2

4.2.2 Where it is proposed to use materials outside the ranges specified in 4.2.1, details of the chemical composition, heat treatment and mechanical properties are to be submitted for approval.

4.2.3 Materials for components of reciprocating compressors such as crankshafts, pistons, piston rods, crank cases, etc., are to be produced at a works approved by the Society and in general to be tested in accordance with the Rules of Part XI Materials.

4.2.4 A fully documented fatigue strength analysis is to be submitted indicating a factor of safety of 1.5 at the design loads based on a suitable fatigue strength criteria. Alternatively, the requirements of 4.2.5 to 4.2.9 may be used.

4.2.5 The diameter, d, of a compressor crankshaft using one of the refrigerants detailed in 2.5, is to be not less than that determined by the following formula, when all cranks are located between two main bearings:

$$d = V_c \left[\frac{D^2 p Z}{78.5} \left(\frac{S}{16} + \frac{ab}{a+b} \right) \right]^{1/3} \quad \text{mm}$$

where

a = Distance between inner edge of one main bearing and the centreline of the crankpin nearest the centre of the span, in mm

b = Distance from the centreline of the same crank pin to the inner edge of the adjacent main bearing, in mm

a+b = Span between inner edges of main bearings, in mm

dp = Proposed minimum diameter of crankshaft, in mm

p = Design pressure, in bar g, as defined in 2.5

D = Diameter of cylinder, in mm

S = Length of stroke, in mm

V_c = 1.0 for shafts having one cylinder per crank, or

= 1.05 for 90°
= 1.18 for 60°
= 1.25 for 45°
} between adjacent cylinders on the same crankpin

for the shaft and cylinder arrangements as detailed in Table X 4-1

Z = $\frac{560}{\sigma_u + 160}$ for steel

Z = $\frac{700}{\sigma_u + 260 - 0.059dp}$ for spheroidal or nodular graphite cast iron

Z = $\frac{700}{\sigma_u + 260 - 0.069dp}$ for grey cast iron

σ_u = Specified minimum tensile strength of crank shaft material, in N/mm^2

4.2.6 Where the shaft is supported additionally by a centre bearing, the diameter is to be evaluated from the half shaft between the inner edges of the centre and outer main bearings. The diameter so found for the half shaft is to be increased by 6% for the full length shaft diameter.

Table X 4-1
Angle Between Cylinders

Number of crankpins	Number of cylinders per crank	Angle between cylinders, in degrees		
1 or 2	2	45	60	90
3	2	45	60	-
4	2	45	60	-
1	3	45	60	90
2	3	45	60	-
3	3	45	-	-
1	4	45	60	-
2	4	45	-	-

4.2.7 The dimensions of crank webs are to be such that Bt^2 is to be not less than given by the following formulae:

$0.4d^3$, for the web adjacent to the bearing
$0.75d^3$, for intermediate webs where a single intermediate web is common to two adjacent crank throws

where
B = Breadth of web, in mm
d = Minimum diameter of crankshaft as required by 4.2.5, in mm
t = Axial thickness of web which is to be not less than 0.45d for the web adjacent to the bearing, or 0.60d for intermediate webs, in mm.

4.2.8 Fillets at the junction of crank webs with crankpins or journals are to be machined to a radius not less than 0.05d. Smaller fillets, but of a radius not less than 0.025d, may be used provided the diameter of the crankpin or journal is not less than the product of c × d,

where
c = 1.1–2r/d, but to be taken as not less than 1.0
d = Minimum diameter of crankshaft as required by 4.2.5, in mm
r = Fillet radius, in mm.

4.2.9 Fillets and oil holes are to be rounded to an even contour and smooth finish.

4.2.10 An oil level sight glass is to be fitted to the crankcase.

4.2.11 Compressors with cylinder bores in excess of 50 mm diameter are to be provided with arrangements to relieve high cylinder pressures such as would result from "hydraulic lock" (i.e. liquid refrigerant in the cylinders). Alternatively, the provision of positive means to prevent liquid refrigerant reaching the compressor may be accepted.

4.2.12 The crankcases of trunk piston compressors are to be designed to withstand a pressure equal to the maximum working pressure of the system. The crankcases of compressors of the crosshead type which are substantially isolated from the refrigerant circuit may be designed for lower pressures but are to be provided with relief valves adjusted to lift at a pressure not exceeding the design pressure, and discharging to a safe place.

4.2.13 A crankcase heater, arranged to be energized when the compressor is stopped, is to be provided.

4.3 Screw Compressors

4.3.1 For screw-type compressors, the materials of the rotors and casings are to be produced, and the manufacture is to be carried out, at a works approved by the Society, and in general, they are to be tested in accordance with the Rules for general machinery forgings.

4.3.2 The rotor casing is to be designed for the maximum pressure to which it may be subjected, see 2.5.

4.3.3 Where gearing is fitted to increase the rotor speed and also to locate the rotors, the gearing is to comply with Chapter 5 of Part IV. The manufacturer's maximum allowable tolerances for clearances and backlash between mating rotors are to be stated.

4.4 Pressure Vessels and Heat Exchangers

4.4.1 The term "pressure vessel" will normally apply to receivers and heat exchangers, and does not include any of the following:

(a) Compressors.

(b) Liquid refrigerant pumps.

(c) Pipes and their fittings.

The use of plate heat exchangers will be specially considered on submission of plans, and special tests may be required.

4.4.2 Fusion welded steel pressure vessels exposed to the pressure of the refrigerants are to be constructed in accordance with the requirements of Part V, if applicable. Plans are to be submitted for consideration if required by Part V.

4.4.3 Where ammonia is the refrigerant, the pressure vessels are to be constructed to at least Group II requirements.

4.4.4 Pressure vessels for the containment of primary refrigerants for use in conventional refrigeration circuits where the pressure/saturation temperature relationship applies are not required to be low temperature impact tested unless the design temperature is lower than -40°C.

4.4.5 Pressure vessels are to be thermally insulated to an extent which will minimize condensation of moisture from the surrounding atmosphere. The insulation is to be provided with an efficient vapour barrier and adequately protected from mechanical damage. Prior to applying the insulation, the steel surfaces are to be suitably protected against corrosion.

4.4.6 Each pressure vessel which may contain liquid refrigerant and which is capable of being isolated is to be protected with overpressure relief devices, see 4.13.

4.5 Condensers, Oil Coolers and Evaporators

4.5.1 In order to minimize the risk of corrosion, where the refrigerant is ammonia, the material interface between the primary refrigerant and cooling water or secondary refrigerant is to be manufactured in titanium or a suitable grade of stainless steel. Carbon-manganese steel with a suitable inhibitor would also be acceptable.

4.5.2 Space is to be provided for the withdrawal and replacement of condenser and evaporator tubes.

4.5.3 Where ammonia is used as the refrigerant, the refrigerating plant is to comply with the following additional requirements:

(a) Automatic air purgers are to be provided, with their discharges being led through water before venting to atmosphere.

(b) The cooling water returns from sea-water cooled condensers are not to be led into the main machinery spaces.

(c) Fresh water condenser cooling systems are to be provided with pH meters to activate audible and visual alarms in the event of an ammonia leak.

4.6 Liquid Receivers and Oil Separators

4.6.1 Primary refrigerating systems are to be provided with liquid receivers with sufficient capacity to hold the complete refrigerant charge to prevent emission of the refrigerant to the atmosphere during servicing or repairs.

4.6.2 Alternatively, in systems using a secondary refrigerant, with a number of units, smaller receivers may be used provided the system includes a common storage receiver with sufficient capacity to hold at least the primary refrigerant charge from two units. The common receiver is to be provided with the necessary crossover connections to facilitate transfer of refrigerant to and from each unit in the system.

4.6.3 Oil separators are to be provided at compressor discharges and are to be fitted with a control arrangement to enable the separated oil to be returned to the compress or crankcase. Wire gauze used in separators is to be sufficiently robust and well supported.

4.7 Air Coolers and Cooling Grids

4.7.1 Refrigerated spaces may be cooled by air coolers or cooling grids on the ceiling, bulkheads and sides. In order to minimize the dehydration of the cargo and the frosting of the air coolers or cooling grids, the installation is to be designed to maintain the required notation temperatures with a minimum of difference between the refrigerant and space temperatures.

4.7.2 Individual spaces are to have a minimum of two independent air coolers, each comprising one or more fans and one or more refrigerant circuits in a single casing and with isolating valves. Alternatively, multiple circuits each with their own fan(s), in a single cooler casing may each be regarded as a separate cooler, provided stop valves are fitted so that each circuit may be isolated.

4.7.3 For refrigerated spaces having a net volume of 300 m^3 or less, a single cooler with one circuit will be accepted.

4.7.4 The refrigeration capacity of the air cooler arrangement is to be such that the notation temperature conditions can be maintained with any one independent cooler or circuit out of action. The capacities of the fans are also to be such that they can maintain the required air flow rates (see also 5.4) and uniform air temperature throughout the refrigerated spaces, when part or fully loaded with cargo, with any one cooler or fan out of action.

4.7.5 Air cooler fan motors are to be suitably enclosed to withstand the effects of moisture.

4.7.6 Means are to be provided for effectively defrosting air coolers. Air coolers are to be provided with trays of suitable depth arranged to collect all condensate. The trays are to be provided with drains at their lowest points to enable the condensate to be drained away when the refrigerated spaces are in service. Provision is to be made for the prevention of freezing of the condensate.

4.7.7 Air coolers are to be located such that when the refrigerated spaces are loaded with cargo, adequate space is provided for the inspection, servicing and renewal of controls, valves, fans and fan motors.

4.7.8 The cooling grids in each refrigerated space are to be arranged in not less than two sections, and each section is to be fitted with valves so that it can be shut off. The notation temperature conditions are to be capable of being maintained with any one section isolated. For spaces having a net volume of 300 m^3 or less, a single section will be acceptable.

4.7.9 Steel air cooler circuits and cooling grids are to be suitably protected against external corrosion.

4.8 Refrigerant Pumps

4.8.1 Pumped primary and/or secondary refrigerant systems are to have a minimum of two pumps. Each pump is to be capable of operating on all cargo chambers and maintaining full duty with any one pump out of operation.

4.8.2 Primary and, where appropriate, secondary refrigerant pumps are to be provided with pressure relief valves, see 4.13.12.

4.9 Condenser Cooling Water Pump

4.9.1 At least two separate condenser cooling water pumps are to be installed. One of the pumps may be considered as a standby pump and may be used for other purposes, provided that it is of adequate capacity and its use on other services does not interfere with the supply of cooling water to the condensers.

4.9.2 Not less than two sea inlets are to be provided supplying sea-water to the pumps for condenser cooling. It is recommended that one of the sea inlets be provided on the port side and the other on the starboard side. The sea inlets are to be fitted in accordance with Part VI, Chapter 3.1.

4.9.3 The cooling water pumps and sea inlets are to be suitably valved and cross-connected with each condenser.

4.9.4 Suitable spring-loaded safety valves are to be provided in each cooling water circuit, see 4.13.13.

4.10 Piping Systems and Joints

4.10.1 All piping, valves and fittings are to be suitable for the maximum pressure to which the system can be subjected and are to comply with the requirements of Part VI, Chapter 1.

4.10.2 Pipe work for ammonia is to comply with the requirements of Group I piping.

4.10.3 In addition to visual examination of pipe welds, non-destructive examination of pipe welds is to be carried out in accordance with the requirements of Part VI, as applicable, to the satisfaction of the Surveyor.

4.10.4 All steel pipe work on the low temperature part of the system is to be protected against external corrosion. Protective coatings are to be removed from pipe surfaces to a distance of not less than 50 mm either side of the joint weld preparations prior to welding. On completion of welding and testing a protective coating is to be applied.

4.10.5 Where brine is the secondary refrigerant, piping and tanks are not to be galvanized on the brine side. If any parts of the brine system have been galvanized, the brine cooling and return tanks are to be provided with a ventilating pipe or pipes led to the atmosphere in a location where no damage will arise from the gas discharged. The ventilation pipes are to be fitted with wire gauze diaphragms which can be readily renewed.

4.10.6 Copper piping is to be manufactured in accordance with the requirements of Part VI, as applicable, except in the case of small air coolers having finned pipes of sizes not greater than 19 mm outside diameter, and which have been fabricated under workshop conditions. The finned pipes may have a minimum wall thickness of 0.5 mm when used with R22 and R134 are frigerants.

4.10.7 Where the use of plastics pipe is proposed in a secondary refrigerant system (e.g. brine), it is to be in accordance with Part VI, as applicable.

4.10.8 Pipelines are to have ample provision for expansion and contraction in service conditions. In general, expansion bends are to be used for this purpose. However, the use of metallic expansion bellows will be accepted provided test data is produced showing satisfactory strength and fatigue properties under the appropriate conditions.

4.10.9 All pipelines are to be fully supported and secured so as to prevent vibration. Flexible hoses may be used, where necessary, to prevent transmission of vibration provided the documentation in 4.10.8 is provided. Flexible hoses are to be of a type which has been approved by the Society.

4.10.10 Pipe work, which may contain low temperature refrigerant, except within secondary refrigerant cooler rooms, is to be thermally insulated to an extent which will minimize condensation of moisture. Insulation in pre-formed sections is recommended. If in situ foamed insulation is employed, pre-production testing on site is to be carried out to the satisfaction of the Surveyor, using a "mock-up" representative of the system to be employed.

4.10.11 All pipe insulation is to be provided with an efficient vapour barrier, care being taken to ensure that it is not interrupted in way of supports, valves, etc. Also adequate protection of insulation surfaces from mechanical damage is to be provided.

4.10.12 Where refrigerating piping is embedded in the cargo chamber insulation, the locations of the pipe joints are to be marked on the outside of the insulation lining.

4.10.13 Butt welded pipe joints are to be employed as far as practicable. Socket welded pipe joints are acceptable up to 25 mm diameter. Flanged or other joints are to be kept to a minimum and, in general, are to be restricted to connections with items of machinery or components which may have to be removed for maintenance purposes. Connections to valves are normally to be welded unless they are of a type, or in a position, which precludes in situ maintenance.

4.10.14 Pipe connections to fittings (e.g. gauge lines, level controls) which are likely to be subjected to heavy corrosion, are to be of heavy gauge construction, or be made from suitable corrosion resistant materials.

4.11 Liquid level Indicators

4.11.1 Where liquid level indicators of the "see-through" variety are used they are to be of the flat plate type incorporating glass (or equivalent material) of heat resistant grade.

4.11.2 All level indicators are to be provided with automatic shut-off devices and isolating valves. Plate-type sight glasses which form an integral part of the component in which they are mounted (e.g. compressor crankcases, pressure vessels) are exempt from this requirement.

4.11.3 All level indicators are to be suitable for the system maximum working pressure and tested accordingly.

4.12 Automatic Expansion Valves

4.12.1 Refrigerating systems with automatic expansion valves are also to be provided with efficient hand expansion valves and the arrangement is to be such that the automatic expansion valves can be by-passed and isolated.

4.12.2 As an alternative, duplicate automatic expansion valves may be fitted, each valve is to be capable of the required duty and operable with the other out of action.

4.13 Overpressure Protection Devices

4.13.1 Refrigeration systems are to be provided with relief devices, but it is important to avoid circumstances which would bring about an inadvertent discharge of refrigerant to the atmosphere. The system is to be so designed that pressure due to fire conditions will be safely relieved.

4.13.2 Pressure relief devices are to be mounted in such a way that it is not possible to isolate them from the part of the system which they are protecting except that, where duplicated, a changeover valve may be fitted which will allow either device to be isolated for maintenance purposes without it being possible to shut off the other device at the same time.

4.13.3 Relief discharge is to be led to a safe place above deck away from personnel accesses and air intakes. Discharge piping is to be designed to preclude ingress of water, dirt or debris which may cause the equipment to malfunction.

4.13.4 For ammonia systems, discharge from relief valves is to be led through water before venting to the atmosphere. Vapour detectors are to be provided in the discharge pipes to activate audible and visual alarms in the event of a leakage of ammonia.

4.13.5 A pressure relief valve and/or bursting disc is to be fitted between each positive displacement compressor and its gas delivery stop valve, the discharge being led to the suction side of the compressor. The flow capacity of the valve or disc is to exceed the full load compressor capacity on the particular refrigerant at the maximum potential suction pressure. For these internal relief valves, servo-operated valves will be accepted. Where the motive power for the compressor does not exceed 10 kW, the pressure relief valve and/or bursting disc may be omitted.

4.13.6 Compressors protected by bursting discs are to be provided with automatic shutdown in the event of high discharge temperatures.

4.13.7 Each compressor is to be provided with automatic shutdown in the event of high discharge pressure. For refrigeration systems where the maximum working pressure is less than or equal to 4.0 MPa the automatic shutdown is to operate at a pressure in excess of normal operating pressure but no greater than 0.9 of the maximum working pressure. For refrigeration systems where the maximum working pressure is greater than 4.0 MPa the automatic shutdown is to operate at a pressure in excess of normal operating pressure but no greater than 0.95 of the maximum working pressure.

4.13.8 Each pressure vessel which may contain liquid refrigerant and which is capable of being isolated by means of stop or automatic control or check valves is to be protected by two pressure relief valves or two bursting discs, or one of each, controlled by a changeover device.

4.13.9 Pressure vessels which are interconnected by pipe work without valves, and cannot be isolated from each other, may be regarded as a single pressure vessel for this purpose, provided the interconnecting pipe work does not prevent effective venting of any vessel.

4.13.10 Omission of one of the specified relief devices and the changeover device, as required by 4.13.8, will be allowed where:

(a) Vessels are of less than 300 litres internal gross volume; or

(b) Vessels discharge into the low pressure side by means of a relief valve; or

(c) Vessels operating using only cargo gas and, which can be independently isolated and gas freed during normal cargo operations provided that a shelf spare is carried.

4.13.11 Sections of systems and components which could become full of liquid between closed valves are to be provided with pressure relief devices relieving to a suitable point in the refrigerant circuit.

4.13.12 Refrigerant pumps are to be provided with pressure relief valve on the discharge side, which may relieve to the suction side or to another suitable location.

4.13.13 Suitable spring-loaded safety valves are to be provided on the cooling liquid side of condensers and the brine side of evaporators where the pressure from any pump or expansion of the liquid in the circuit could exceed the design pressure of the system or any component forming part of the cooling system.

4.13.14 Relief valves are to be adjusted and bursting discs so selected that they relieve at a pressure not greater than the design pressure of the system, as defined in 2.5.

4.13.15 When satisfactorily adjusted, relief valves are to be protected against tampering or interference by a wire with a lead seal or similar arrangement.

4.13.16 Valves which are arranged to discharge to the low pressure side of the system are to be substantially independent of back pressure and are to be of a type which has been approved by the Society.

4.13.17 The minimum required discharge capacity related to air of the pressure relief device for each pressure vessel is to be determined as follows:

$$C = DLf$$

where

C	=	Minimum required discharge capacity related to air of each relief device, in kg/s
D	=	Outside diameter of the vessel, in metres
L	=	Length of the vessel, in metres
f	=	Factor which is dependent on the refrigerant:

R22, R134a, R407C	0.131
R290 (Propane), R600a (Isobutane)	0.082
R404A, R410A, R507A	0.203
R717 (Ammonia)	0.041
R744 (Carbon dioxide), (when used on the low side of a cascade system)	0.082

4.13.18 The rated discharge capacity of the pressure relief valves expressed in kg/s of air may also be determined in accordance with an appropriate recognized National or International Standard such as "ISO 5149 Mechanical Refrigeration Systems used for Cooling and Heating – Safety Requirements."

4.13.19 The rated discharge capacity of a bursting disc discharging to atmosphere under critical flow conditions is to be determined by the following formula:

$$d = 857.5\left(\frac{C}{P}\right)^{\frac{1}{2}} \quad \text{mm}$$

where

d	=	Minimum diameter of free aperture of bursting disc, in mm
C	=	Minimum required air equivalent discharge capacity, in kg/s, see 4.13.17
P	=	1.1 × maximum working pressure, see 2.5

4.13.20 The bore of the discharge pipe is to be at least the same bore as the relieving device outlet. The size of a common discharge line serving two or more pressure relieving devices which may discharge simultaneously is to be based on the sum of their outlet areas. Where discharge lines are long or where the outlets of two or more pressure relieving devices are connected into a common line, the discharge piping is to be sized such that the back pressure at full relief rate does not exceed 10% of the relief valve set pressure.

4.13.21 Due account is to be taken of the reaction force on a relief valve or on discharge piping during discharge and adequate support provided.

4.13.22 As carbon dioxide can form a solid powder at atmospheric pressure, there is a possibility that relief devices will choke if vented directly to atmosphere. The method used to guard against the formation of powder is to be submitted for consideration.

4.13.23 In carbon dioxide systems, overpressure protection is to be fitted to pipelines or components which can be isolated in a liquid full condition. Pressure relief devices are to be arranged such as to vent vapour at all times.

4.13.24 In cascade systems where carbon dioxide is used in combination with ammonia, the effects of carbon dioxide leaking into the ammonia side are to be considered. It may be desirable to design the ammonia system to either withstand the design pressure on the carbon dioxide side or have relief arrangements to safely deal with the additional vapour produced if a leak occurs.

4.14 Filters, Driers and Moisture Indicators

4.14.1 Suitable filters are to be provided in the refrigerant gas lines to compressors and in the liquid lines to refrigerant flow controls. Wire gauze used in filters is to be sufficiently robust and well-supported. A filter may be combined with the oil separator required by 4.6.3. Stop valves are to be provided to allow for servicing of filters. After first commissioning of the system, the filters are to be examined to confirm that elements remain intact and not collapsed.

4.14.2 Refrigerant filters, driers and moisture indicators are to be fitted in halocarbon refrigerant systems, and the arrangement is to be such that filters and driers can be by passed, isolated and opened up without interrupting plant operations.

4.15 Purging Devices

4.15.1 Where the operating pressure of the low pressure system may be below atmospheric, a purging device is to be provided, the discharge from which is to be led to a safe place above deck.

4.16 Pressure Testing at Manufacturer's Works

4.16.1 Components intended for use with a primary refrigerant system are to be subject to strength and leak pressure tests as detailed in Table X 4-2.

Table X 4-2
Test Pressures

Component	Test Pressure (MPa)	
	Strength test	Leakage test
1. Pressure vessels	1.5 P	1.0 P
2. Compressor cylinders/crankcase/casing	1.5 P	1.0 P
3. Valves and fittings	2.0 P	1.0 P
4. Pressure piping, fabricated headers, air coolers, etc.	1.5 P	1.0 P

4.16.2 Component strength pressure tests are to be hydraulic or where suitable safety measures are taken, may be pneumatic. The latter is to be carried out with a suitable dry inert gas.

4.16.3 Component leakage pressure tests are to be carried out only after completion of satisfactory strength pressure tests. Pneumatic pressure is to be applied using a suitable dry inert gas.

4.16.4 Components for use with a secondary refrigerant or cooling water are to be hydraulically tested to 1.5 times the design pressure, but in no case less than 0.35 MPa.

4.17 Refrigerant Piping Pressure Test after Installation on board Ship

4.17.1 For primary refrigerant piping welded in place, strength pressure tests of the welds are to be carried out at a test pressure of 1.5P. This will normally take the form of a pneumatic test since hydraulic testing media such as water are not acceptable due to their incompatibility with the primary refrigerants and the difficulty of removing all traces from a completed system.

4.17.2 Pneumatic pressure tests are to be carried out using a suitable inert gas. All pneumatic tests are potentially dangerous and due precautions are to be observed.

4.17.3 Where pneumatic tests are prohibited by relevant authorities, the tests required by 4.17.2 may be omitted provided non-destructive tests by ultrasonic or radiographic methods are carried out with satisfactory results on the entire circumference of all butt welds not tested in accordance with 4.10.3.

4.17.4 After completion of the test required by 4.17.1, 4.17.2 or 4.17.3, a leak pressure test is to be carried out using a suitable inert gas at a pressure equal to the design pressure, in the presence of the Surveyor.

4.17.5 Secondary refrigerant piping welded in place is to be hydraulically tested to 1.5 times the design pressure, but in no case less than 0.35 MPa.

Chapter 5
Refrigerated Cargo Spaces

5.1 Air Tightness of Refrigerated Spaces

5.1.1 The envelopes of individual refrigerated spaces, enclosing each temperature zone, are to be sufficiently airtight to prevent infiltration of water vapour and cross-contaminating odours.

5.1.2 Each envelope is to be hose-tested for tightness before the insulation is installed. Alternative proposals to test with gas or air under pressure will be considered.

5.1.3 Hatch closing appliances, access doors, side loading doors, bilge and manhole plugs forming part of an insulated envelope are to be made airtight and, where exposed to ambient conditions, are to be provided with a double seal.

5.1.4 Ventilators, ducts or pipes passing through refrigerated spaces to other compartments are to be made airtight and efficiently insulated. Particular attention is to be given to insulation linings forming surfaces of air ducts. Ventilators to refrigerated spaces, if fitted, are to be provided with airtight closing appliances.

5.1.5 Refrigeration pipes passing through bulkheads or decks of refrigerated chambers or spaces are not to be indirect contact with the steelwork.

5.1.6 The temperature of the ship's steelwork close to low temperature refrigeration piping must not be lower than that acceptable for the steel grade.

5.1.7 The airtightness of the bulkheads and decks is to be maintained and, where the pipes pass through watertight decks and bulkheads, the fittings and packing of the glands are to be both fire resisting and watertight.

5.2 Insulation Systems

5.2.1 The insulation arrangement, materials, construction and installation are to be in accordance with the approved plans and to the satisfaction of the Surveyors.

5.2.2 Steelwork and fittings are to be clean and dry, and suitably coated to prevent corrosion, before insulation is applied.

5.2.3 Rockwool, polyurethane, styrofoam, glass fiber or equivalent material may be used for insulation purposes.

5.2.4 In situ insulation and insulating panels are to be of a type that has been approved and accordingly, whenever practicable, be selected from the List of Type Approved Products published by the Society.

5.2.5 Prefabricated panels, with an organic foam core and metal or similar cladding both sides, are also to be manufactured under survey at a works approved by the Society. Organic foam materials are to be certified as self extinguishing. All materials are to be free from odour likely to cause taint.

5.2.6 The thickness of insulation over all surfaces and the manner in which it is supported are to be in accordance with the approved specification and plan.

5.2.7 The insulation is to be efficiently packed and, where it is of slab form, the joints are to be butted closely together and staggered.

5.2.8 Where it is intended to use a foamed in situ type of insulation, full details of the process are to be submitted for approval before the work commences and pre-production testing on site is to be carried out to the satisfaction of the Surveyor, using a "mock-up" representative of the system to be employed.

5.2.9 Prefabricated panels are to be of a design such that, when erected, continuity of the insulation envelope is maintained without any gaps. Any unavoidable gaps between panels or insulation slabs are to be filled with insulating material to the satisfaction of the Surveyor.

5.2.10 The inner surfaces of insulation envelopes are to be clad with a suitable lining, such as marine grade aluminum or plywood, or equivalent material which is:

(a) Impermeable;

(b) Able to withstand wear and tear and the flexing of the ship's structure without fracture at the notation temperatures;

(c) Non-corrosive, non-rotting; and

(d) Free from odour likely to cause taint.

(e) Where prefabricated panels are employed the outer surfaces are also to be clad with a suitable lining.

5.2.11 Insulation linings are to be constructed and fitted so that they are airtight and provide an effective vapour barrier. The means of joining prefabricated panels are to have sufficient mechanical strength to maintain a vapour barrier on the inner and outer faces. All joints, including corner, deck, deckhead and tank top intersections are to be sealed with a suitable flexible, water vapour resistant sealant or gasket.

5.2.12 Special care is necessary where air ducts are embedded in the insulation, and where refrigeration pipes, air refreshing ducts, fan supports, fixtures, etc., protrude through the linings.

5.2.13 Hatch covers and plugs, access doors, manhole plugs, bilge limbers and plugs forming part of the insulated envelope are to be constructed of, or covered with, a suitable lining material.

5.2.14 Insulation linings and air screens, together with supports, are to be strong enough to withstand the loads imposed by either refrigerated or general cargo.

5.2.15 Successive coatings impervious to oil are to be applied before insulating the exposed plating of tank tops and bulkheads, forming part of the refrigerated cargo space envelope and protecting tanks containing oil. The total thickness of the required coating will depend on the construction of the tank, the composition of the coating used and the method of application.

5.2.16 If the cargo to be loaded on the tank top insulation could cause damage to the lining, then additional protection is to be provided directly underneath the hatch opening and 0.6 m beyond. The protection may be of either a permanent or temporary nature, provided the required air circulation is not adversely affected.

5.2.17 Where the insulation is to support fork lift trucks, the strength of the lining and its supports is to be demonstrated. A 4 × 4 m sample of the cargo floor construction, including insulation, is to be prepared and tested by

a fully loaded forklift truck with a gross weight of 6.5 tons on one axle with a wheel pitch of 1450 mm, having single wheeled pneumatictyres. The truck is to be driven and manoeuvred over the sample to the satisfaction of the Surveyor.

5.2.18 Prefabricated panel systems are to be fitted with suitable pressure equalizing devices to prevent damage which may be caused by under or over pressure resulting from the defrosting of coolers, rapid changes in pressure on the inner and outer faces of the panels or rapid cooling of the chamber.

5.2.19 The pressure equalizing devices are to be so designed as to allow the passage of air in either direction, but remain effectively closed until the pressure differential reaches a value of 10 mm water column. Heating is to be provided to protect the mechanism from freezing.

5.3 Insulation Access Plugs and Panels

5.3.1 Insulated plugs are to be provided in the insulation where required for easy access to the bilges, bilge suction strum boxes, cooler and chamber drains and tank manhole lids. Removable panels are to be provided for access to tank air and sounding pipes and drains.

5.3.2 Tank top insulation in way of manholes and bilge hats is to be provided with a liquid-tight steel coaming to prevent seepage into the insulation.

5.3.3 Manholes are not permitted in the bulkheads of fuel oil tanks forming part of the refrigerated cargo space envelope.

5.4 Air Circulation and Distribution

5.4.1 When frozen cargo is carried, provision is to be made for the adequate circulation of air between the frozen cargo and all the insulation lining surfaces.

5.4.2 When cooled cargo is carried, of a type which may generate heat or emit gas (e.g. banana cargo), provision is to be made for the adequate circulation of air through all the stow.

5.4.3 There is to be adequate air flow between cargo and cooling grids, where fitted.

5.4.4 The air distribution arrangements are to be such that the required circulation rate and uniform distribution can be achieved when the space is part or fully loaded with cargo.

5.4.5 The arrangement is also to be capable of maintaining uniform air temperature throughout the space with any one fan, or air cooler, or cooling grid circuit out of action, see 4.7.

5.5 Air Refreshing Arrangements

5.5.1 Where spaces are intended for the carriage of refrigerated cargoes requiring controlled ventilation, means are to be provided for air refreshing.

5.5.2 The positions of the air inlets are to be carefully selected to minimize the possibility of contaminated air entering the spaces.

5.5.3 Chambers or spaces are to be provided with separate inlet and discharge vents. Each vent is to have a positive airtight valve capable of closing onto a seat. It is recommended that a distance of at least 3 m is maintained between inlet and exhaust vents.

5.6 Piping in way of Refrigerated Spaces

5.6.1 All sounding pipes, whether for compartments or tanks, which pass through refrigerated spaces or the insulation thereof, in which the temperatures contemplated are 0°C or below, are to be not less than 65 mm bore. The pipe work is to be in accordance with the requirements of Part VI.

5.6.2 Sounding pipes to oil compartments are not to terminate within refrigerated spaces or in their air cooler spaces, nor are these pipes to terminate in enclosed spaces from which access is provided to refrigerated spaces or their air cooler spaces.

5.6.3 All pipes, including scupper pipes, air pipes and sounding pipes that pass through refrigerated spaces are to be insulated.

5.6.4 Where the pipes referred to in 5.6.3 pass through chambers intended for temperatures of 0°C or below, they are also to be insulated from the steel structure, except in positions where the temperature of the structure is mainly controlled by the external temperature and will normally be above freezing point.

5.6.5 Pipes passing through a deck plate within the ship side insulation, where the deck is fully insulated below and has an insulation rib and on top, may be attached to the deck plating.

5.6.6 In the case of pipes adjacent to the shell plating, metallic contact between the pipes and the shell plating or frames is to be avoided so far as practicable.

5.6.7 The air refreshing pipes to and from refrigerated spaces need not, however, be insulated from the steelwork.

5.7 Drainage from Refrigerated Spaces

5.7.1 All refrigerated cargo spaces are to have ample continuous drainage. The pipework is to be in accordance with the requirements of Part VI.

5.7.2 Provision is to be made to prevent air and water from leaking into adjacent refrigerated cargo spaces.

5.7.3 All drain pipes from the refrigerated spaces and cooler trays are to be fitted with liquid sealed traps, which are to be of adequate depth and readily accessible for cleaning and refilling with brine. The pipes from lower spaces situated on the tank tops are also to be fitted with bilge non-return valves.

5.7.4 Where drains from separate refrigerated spaces join a common main, the branch pipes are each to be provided with a liquid sealed trap.

5.7.5 Drains from compartments outside insulated chambers are not to be led down to the bilge of the latter.

5.7.6 Screwed plugs or other means for blanking off scuppers, draining chambers and cooler trays are not to be fitted. If, however, it is specially desired to provide means for temporarily closing these scuppers, they may be fitted with shut-off valves.

5.7.7 Drain pipes are to have flanged connections near the outlets to allow cleaning in the event of blockage.

5.7.8 Trace heating of the drain pipes and drip trays is to be provided when carrying frozen cargo.

5.8 Corrosion Protection of Metal Fixtures

5.8.1 All steel bolts, nuts, hangers, brackets and fixtures which support or secure cooling appliances, piping insulation, meat rails, linings and insulated panels, etc., are to be suitably protected against corrosion.

5.9 Heating Arrangements for Fruit Cargoes

5.9.1 Where the class notation includes the carriage of fruit cargoes in general, facilities for heating the refrigerated spaces are to be provided to maintain the carrying temperatures when the temperatures outside the spaces are lower.

Chapter 6
Controlled Atmosphere (CA) Systems

6.1 General

6.1.1 The requirements of this chapter apply to refrigerated cargo ships classed with the Society, where a Controlled Atmosphere (**CA**) notation as described in 1.4.5 of Part I of the Rules is requested. The requirements are additional to the classification requirements for refrigerated cargo installations contained in this Part as applicable.

6.1.2 Ships provided with a controlled atmosphere (**CA**) system, either temporary or permanent, for generating nitrogen enriched gases and its supply to the refrigerated cargo spaces and to control the atmosphere in those spaces, which are approved, installed and tested in accordance with the following requirements will be eligible for the class notation **CA**.

6.1.3 Portable nitrogen-generating equipment intended to serve multiple refrigerated cargo holds is to comply with all the relevant requirements of this Chapter and is to be approved in consideration with the number of specific refrigerated cargo spaces it is intended to serve.

6.1.4 Where the proposed construction of the CA system, or CA zones, is novel in design, or involves the use of unusual materials or equivalent arrangements to those specified in this chapter, special tests may be required, and a suitable descriptive note may be assigned.

6.1.5 An example of a typical class symbol and **CA** notation on a refrigeration installation classed with the Society, fitted with a CA system built under Special Survey, would be:

"**RMS** ✠ to maintain a temperature –29°C to +14°C with sea temperature +32°C maximum"
"CA(1~12% O_2, 0~25% CO_2, 50% RH)"

6.2 Definitions

6.2.1 **Controlled atmosphere (CA) system** means a gastight system that the O_2 concentration in the cargo space is reduced and the CO_2 concentration adjusted to the required levels by the introduction of high purity nitrogen or other suitable gas, or the relative humidity controlled, in order to retard the metabolic process and extend the life of fresh products and cargoes as subsidiary installations for cargo refrigerating installations. The oxygen and CO_2 concentrations or relative humidity within the cargo space are then monitored and controlled throughout the loaded voyage.

6.2.2 **CA zone** means one or more cargo chambers which are under controlled atmosphere and which are enclosed in an air-tight envelope.

6.2.3 **Adjacent space** means an enclosed space adjoining a CA zone separated by watertight bulkheads or decks penetrated by pipes, cables, ducts, doors, tween deck, etc.

6.2.4 **Gas** means a suitable gaseous mixture to retard the metabolic process of fresh products.

6.2.5 **Gas system** means a gas system which controls the levels of O_2 and/or CO_2 and/or relative humidity.

6.3 Additional Information and Plans

6.3.1 In addition to those requirements detailed in 1.4 of Chapter 1 of this Part, the following information and plans are to be submitted before the beginning of the work.

6.3.2 Plans of CA zones and adjacent spaces

(a) Capacity plan.

(b) Location and installation of CA equipment.

(c) Arrangement of CA zones in sectional elevation and plan views.

(d) Access arrangement.

(e) Arrangement and use of spaces adjacent to CA zones.

(f) Details of securing weather deck and tween deck hatch lids.

(g) Details of securing gratings in way of hatch lids.

(h) Details of weather deck and access hatch seals.

(i) Door seals, scuppers, pipes, cables and ducts penetrating the decks, bulkheads, etc., together with proposed design conditions in the CA zones.

(j) Specified air leakage rate and proposals for its measurement.

(k) Location of sampling points for CA gas and/or sensors in the CA zones and adjacent spaces.

(l) Details of the gas supply piping system.

(m) Details of gas freeing arrangements, including fans, valves, ducts and any interlocks.

(n) Details of pressure/vacuum valves for protecting devices in CA zones, location of outlets from P/V valves and capacity calculations.

(o) Details of security locks provided on entry to the hatch and manhole covers, and doors leading to CA zones and adjacent spaces.

(p) Arrangements of ventilation systems for the gas generator compartment and other adjacent spaces adjoining CA zones.

6.3.3 Gas supply system

(a) Schematic arrangements of the proposed gas supply systems and, where applicable, details of compressors, pressure vessels, membranes, storage tanks, gas cylinders, control and relief valves and safety arrangements, including pressure set points of alarm and safety devices.

(b) Capacities of gas supply systems at different oxygen and carbon dioxide levels, if applicable.

6.3.4 Humidifiers

(a) Specification and capacity of the system.

(b) Principles of operation and control of relative humidities under different operating conditions.

(c) Details of proposed equipment, nozzles, pads, heaters, pumps, steam generator, compressors, water tanks, etc.

(d) Layouts of the equipment and the positioning of sensors and controls.

6.3.5 Control equipment

The following plans and details of the control, alarm and safety systems for CA zones, gas supply compartment and other adjacent spaces, are to be submitted for approval:

(a) Line diagrams of all control circuits.

(b) List of monitored, control and alarm points.

(c) Details of computer systems, if fitted.

(d) Location of control panels and consoles.

(e) Controls of all valves and dampers fitted to CA zones.

(f) Details of oxygen and carbon dioxide analysers and arrangements for calibration.

(g) Relative humidity (RH) sensors and details of calibration.

(h) Details of alarm system, including location of central control panel and audible and visual warning devices.

6.3.6 Electrical

In addition to the applicable requirements of Part VII, the following information and plans specific to the installed CA system are to be submitted for approval:

(a) Main power supply arrangement to the CA system.

(b) Single-line diagram of the CA system which is to include rating of electrical machines, insulation type, size and current loading of cables and make, type and rating of protective devices.

(c) A schedule of normal operating loads of CA system, expected for the different operating conditions.

6.3.7 Testing

Details of the testing programme are to be submitted, including instrumentation to be used with range and calibration.

6.4 CA Zones and Adjacent Spaces

6.4.1 Air-tightness of CA zones

(a) The CA zones are to be made air-tight in accordance with the requirements in 6.10.4. Particular attention is to be paid to sealing of hatches, plugs and access doors in each CA zone. Double seals are to be fitted to each opening.

(b) Openings for pipes, ducts, cables, sensors, sampling lines and other fittings passing through the decks and bulkheads are to be suitably sealed and made air-tight.

(c) The liquid sealed traps from bilges and drains from the cooler trays are to be deep enough to withstand, when filled with liquid which will not evaporate or freeze, the design pressure in each CA zone when taking account of the ship's motion.

(d) Air refreshing inlets and outlets are to be provided with isolating arrangements.

6.4.2 CA zone protection

(a) Means are to be provided to protect CA zones against the effect of overpressure or vacuum.

(b) At least two P/V valves are to be fitted in each CA zone. They are to be set for the design conditions of the CA zone.

(c) Consideration will be given to the use of a single valve in combination with other suitable means of overpressure or vacuum protection.

(d) The proposed P/V valves for each zone are to be of adequate size to release any excess pressure and to relieve the vacuum at maximum cooling rate.

(e) P/V valve discharges are to be located at least 2 m above deck and 10 m away from any ventilation inlets. Discharge piping is to be arranged to preclude ingress of water, dirt or debris which may cause the equipment to malfunction.

(f) Pressure sensors are to be installed in locations necessary to monitor pressure of all CA zones. Pressure sensors are to be installed away from fans, air inlets and outlets.

6.4.3 Gas freeing of CA zones

(a) The arrangements for gas freeing of CA zones are to be capable of purging all parts of the zone to ensure a safe atmosphere.

(b) Cargo air cooling fans and the air refreshing arrangements may be used for gas freeing operations.

(c) Gas freeing outlets are to be led to a safe place in the atmosphere 2 m above the deck, away from accommodation spaces and intakes of the fans for accommodation.

(d) The gas freeing ventilation inlets and outlets of CA zones are to be provided with positive closing gas tight valves.

6.4.4 Ventilation of adjacent spaces

(a) Deckhouses and other adjacent spaces which require to be entered regularly are to be fitted with a positive pressure type mechanical ventilation system with a capacity of at least 10 air changes per hour capable of being controlled from outside these spaces.

(b) Adjacent spaces not normally entered are to be provided with a mechanical ventilation system which can be permanent or portable to gas free the space prior to entry.

(c) Ventilation inlets are to be arranged so as to minimize recycling any gas and are to be at least 10 m in the horizontal direction away from the ventilation outlets.

6.5 Gas Systems

6.5.1 General

(a) Means are to be provided to achieve and maintain the required oxygen and/or carbon dioxide levels in the CA zones. This may be accomplished by the use of stored gas, portable or fixed gas generating equipment or other equivalent arrangements. The arrangements are to be such that a single failure will not cause a complete loss of gas supply to the CA zones.

(b) The gas system is to have sufficient capacity to make good any gas loss from the CA zones and to maintain a positive pressure in all CA zones.

(c) The gas system is also to be able to:

(i) Deliver gas at 125% of the specified flow rate with two compressors operating against a back pressure equal to the pressure setting of the cargo space P/V valve.

(ii) Maintain the specified gas levels in all CA zones when operating 24 hours per day with anyone unit on stand-by.

(d) Air intakes are to be located to ensure that contaminated air is not drawn into the compressors.

(e) Where it is intended to supply gas by means of stored gas bottles, the arrangements are to be such that depleted bottles may be readily and safely disconnected and charged bottles readily connected.

6.5.2 Location

(a) Fixed gas generating equipment, gas bottles or portable gas generators are to be located in a compartment reserved solely for their use. Such compartments are to be separated by a gastight bulkhead and/or deck from accommodation, service and control station spaces. Access to such compartments is to be only from the open deck.

(b) Gas piping systems are not to be led through accommodation, service and machinery spaces or control stations.

6.5.3 Gas supply

(a) The gas systems are to be designed so that the pressure which they can exert on any CA zone will not exceed the design pressure of the zone.

(b) During initial operation, arrangements are to be made to vent the gas outlets from each generator to the atmosphere. All vents from gas generators are to be led to a safe location on the open deck.

(c) Where gas generators use positive displacement compressors, a pressure relief device is to be provided to prevent excess pressure being developed on the discharge side of the compressor.

(d) Suitable arrangements are to be provided to enable the supply main to be connected to an external supply.

(e) Where it is intended that gas systems are to be operated unattended, the required CA zone environment is to be automatically controlled.

(f) Means of controlling inadvertent release of nitrogen into CA zones, such as locked valves, are to be provided.

(g) Means are to be provided for stopping the gas generator from outside of the compartment.

(h) Where flexible hoses on deck are intended to be used for the supply of nitrogen gas to the refrigerated cargo spaces, they are to be of an approved type. Means are to be provided for protecting these hoses against damage.

(i) Vessels utilizing either portable or fixed nitrogen generation equipment are to be fitted with a permanently installed piping system for the gas supply and distribution. A positive closing isolation valve is to be fitted in the gas supply line at the inlet to the refrigerated cargo space.

(j) Filters are to be provided in the gas supply lines.

6.5.4 Gas supply compartment ventilation and alarm

(a) The gas supply compartment is to be fitted with a mechanical extraction ventilation system providing a rate of at least 20 air changes per hour based on the total empty volume of the compartment.

(b) Ventilation ducts from the gas generator/supply compartment are not to be led through accommodation, service and machinery spaces or control stations.

(c) The air outlet duct is to be led to a safe place on the open deck.

(d) The gas supply compartment is to be provided with a low oxygen alarm system and warning notices posted to indicate that this area is a dangerous area.

(e) Means are to be provided for stopping the ventilation fans and closing all of the openings to the gas system from outside of the compartment.

6.6 Relative Humidity (RH)

6.6.1 Where a humidification system is fitted, the following requirements are to be complied with:

(a) The supply of fresh water for humidification is to be such as to minimize the risk of corrosion and contamination of the cargo.

(b) To prevent damage or blockage in the humidification system caused by water freezing, the air, steam or water pipelines in the cargo chambers are to be installed to facilitate ease of drainage and are to be provided with suitable heating arrangements.

6.7 Electrical Installation

6.7.1 In addition to the requirements of Part VII, the following requirements are to be complied with:

(a) The electrical power for the CA plant is to be provided from a separate feeder circuit from the main switchboard.

(b) Under sea-going conditions, the number and rating of service generators are to be sufficient to supply the cargo refrigeration machinery and CA equipment in addition to the ship's essential services, when any one generating set is out of action.

6.8 Control Instrumentation and Alarms

6.8.1 General

(a) An alarm system for monitoring the atmosphere in CA zones is to be installed which may be integral with the machinery space alarm system.

(b) Where alarms are displayed as group alarms in the main machinery space alarm system, provision is to be made to identify individual alarms at the refrigerated cargo control station.

(c) The pressure in each CA zone is to be monitored and an alarm initiated when the pressure is too high or too low.

(d) Where the RH description is to be assigned, humidity sensors are to be installed in each of the CA zones and are to initiate an alarm when the relative humidity (RH) falls below or exceeds the predetermined set values.

(e) Gas sensors or analysers are to be provided to monitor gas content in CA zones, see 6.8.3 and 6.8.4.

(f) Gas analysers and sensors are to be calibrated automatically once in every 24 hours. An alarm is to be initiated if accuracy is outside tolerance limits.

(g) Direct readout of the gas quality within any CA zone is to be available to the operating staff on demand.

(h) At least one automatic recorder is to be provided for the remote monitoring and recording of O_2 and CO_2 levels in each CA zone.

(i) Alarms are to be initiated in the event of O_2 or CO_2 levels in each CA zone falling below or exceeding the predetermined set values.

6.8.2 Gas systems

(a) Where air compressors are to be used for gas production, alarms are to be initiated for the following conditions:
   (i) High lubricating oil temperature.
   (ii) High differential pressure across the filters.
   (iii) Electric supply failure.

(b) The compressors are to shutdown automatically in the event of:
   (i) High discharge air temperature.
   (ii) High discharge air pressure.
   (iii) Low lubricating oil pressure.
   (iv) High pressure in CA zone.

(c) Instrumentation is to be fitted for indicating continuously:
   (i) Gas pressure.
   (ii) Gas temperature.
   (iii) Gas content.
   (iv) Gas flow.

6.8.3 Gas analysers and sampling

(a) Where analysers are fitted, at least two analysers for oxygen and carbon dioxide having a tolerance of ±0.1 % by volume are to be provided to determine the content of the circulated gas within the CA zones.

(b) Two separate sampling points are to be located in each CA zone and one sampling point in each of the adjacent spaces. The arrangements are to be such as to prevent water condensing and freezing in the sampling lines under normal operating conditions. Filters are to be provided at the inlet to sampling point lines.

(c) Arrangements of the gas sampling points are to be such as to facilitate representative sampling of the gas in the space.

(d) Where gas is extracted from the CA zones via a sampling tube to analysers outside the space, the sample gas is to be discharged safely to the open deck.

(e) Portable equipment for measuring O_2 and CO_2 to be available onboard at all times as required by 6.10.7(c).

(f) The sampling frequency is to be at least once per hour.

6.8.4 Where sensors are fitted, at least two sensors for each of O_2 and CO_2, having a tolerance of ±0.1% are to be installed in each CA zone to monitor gas levels. Gas sensors may be used for indication and alarm.

6.9 Safety Requirements

6.9.1 CA zones are to be clearly labelled with "Caution" and "Danger" signs to alert personnel.

6.9.2 Entry hatch and manhole covers, doors leading to the CA zones and adjacent spaces are to be fitted with acceptable security-type locks and alarms activated when covers and doors are opened. The alarms are to be placed in a manned location.

6.9.3 All doors and access hatches to CA zones which may be under pressure are to open outwards and are to be fitted with secondary catches to prevent injury or damage during opening.

6.9.4 At least 10 sets portable oxygen analyzers with alarm are to be provided to sample the oxygen level in all CA zones and adjacent spaces.

6.9.5 A means of communication is to be provided between CA zones and an attended location on deck.

6.9.6 Medical first aid equipment, including at least one set of oxygen resuscitation equipment, is to be provided onboard.

6.10 Inspection and Testing on Completion

6.10.1 CA system trials are to be witnessed on board by the Surveyor, before the system is put into service and before a certificate is issued. These trials are in addition to any tests which may have been carried out at the manufacturer's works.

6.10.2 An Operating and Safety Manual for the guidance of the ship's staff is to be provided, covering the following topics:

(a) Principal information on the use of CA.

(b) Complete description of the CA installation on board.

(c) Hazards of low oxygen atmospheres and consequential effects on human life.

(d) Medical countermeasures when exposed to low oxygen atmospheres.

(e) Instructions for operation, maintenance and calibration of all gas detectors.

(f) Instructions for use of portable oxygen analysers with alarm for personal protection.

(g) Prohibition of entry to spaces under CA.

(h) Loading instructions prior to injection of gas.

(i) Procedure for checking security of CA zones, doors and access hatches prior to injection of gas.

(j) Gas freeing procedure for all CA zones.

(k) Procedure for checking atmosphere of CA zones before entry.

6.10.3 Gas supply and sampling systems

(a) The gas supply main and branches are to be pressure and leak tested. The test pressures are to be 1.5 and 1.0 times the design pressure respectively.

(b) All gas sampling lines are to be leak tested using a vacuum or overpressure method.

6.10.4 Air-tightness of CA zones

(a) Air-tightness of each CA zone is to be tested and the results entered on the certificate. The measured leakage rate of each zone is to be compared with the specified value.

(b) Where the tween-deck spaces within cargo holds are fitted with separate means of maintaining controlled atmosphere conditions, each tween-deck space is to be considered an independent gas tight compartment.

(c) For container carriers where the containers stowed under deck are supplied with a low oxygen atmosphere, each container is to be considered a gas tight compartment.

(d) Each cargo space under controlled atmosphere conditions is to be made gas tight, as far as practicable. The arrangements are to be such as to ensure that when cargo space is pressurized with an over pressure of 20 mm of water column, the time taken for a 40% pressure drop is greater than 16 minutes.

6.10.5 Gas system performance

(a) Capability of the gas system to supply the gas at the specified flow rate and condition is to be verified by tests.

(b) If the notation conditions cannot be verified during testing, assignment of the notation is to be deferred until logbook entries confirm the achievement of the specified conditions in every CA zone during a loaded voyage.

6.10.6 The gas freeing arrangements are to be tested to demonstrate that they are effective.

6.10.7 Safety, alarms and instrumentation

(a) The control, alarm and safety systems are to be tested to demonstrate overall satisfactory performance of the control engineering installation. Testing is also to take account of the electrical power supply arrangements, see also Part VII.

(b) Locking arrangements of all CA zones and adjacent spaces where gas may accumulate, provision of warning notices at all entrances to such spaces, communication arrangements and operation of alarms, controls, etc., are to be examined.

(c) The provision of portable gas detectors and personnel oxygen monitors is to be verified by the Surveyor. Suitable calibrated instruments for measuring the levels of O_2, CO_2 and humidity, gas pressure and gas flow to the CA zones, are to be provided for testing. Their accuracy is to be verified.

Chapter 7

Container Ships fitted with Refrigerating Plant to Supply Refrigerated Air to Insulated "Port Hole" Containers in Ship's Holds

7.1 General

7.1.1 Classed installations designed to supply refrigerated air to insulated "Port Hole" containers in holds aboard container ships are to comply with the requirements of this Part, so far as they are applicable, and the special requirements of this Chapter.

7.1.2 The classed refrigerating installation is to include the refrigerating machinery, air coolers, supply and return air ducting, and the flexible couplings between containers and the duct system.

7.1.3 Where the cargo cell air conditioning is essential to the carriage of the containers, the air conditioning equipment and (if fitted) the insulation of the hold, deckheads, sides and tank tops are to be included in the classification.

7.1.4 Space heating of the cargo cells will be subject to special consideration.

7.2 Additional Information and Plans

7.2.1 In addition to those requirements detailed in 1.4 of Chapter 1 of this Part, the following information and plans are to be submitted before the beginning of the work.

(a) Details of air coolers.

(b) Details of the design of ducting proposed, including joints, connections, insulation, vapour sealing and linings.

(c) Details of cell air conditioning arrangements and components.

(d) Details of couplings between ducting and containers, including operating arrangements.

7.3 Air Coolers

7.3.1 Air ducts supplying more than ten standard 20 ft containers or five standard 40 ft containers are to have a single air cooler with multiple circuits or two independent coolers. The individual circuits or coolers are to be provided with stop valves so that each circuit or cooler may be readily isolated.

7.3.2 The refrigeration capacity of the air cooler arrangement is to be such that the temperature condition scan be maintained with any one circuit or independent cooler out of action.

7.3.3 For air ducts supplying ten standard 20 ft containers or five standard 40 ft containers or less, a single cooler with one circuit will be acceptable.

7.3.4 Means are to be provided for monitoring CO_2 levels in each air cooler battery.

7.3.5 Fresh air ventilation for each container is to be at least two air changes per hour.

7.3.6 The air circulation and fresh air ventilation system serving the containers are to be based upon the air volume of each empty container connected to the system. Air circulation for each connected container is to be 50 to 70 air changes per hour for fruit cargoes and 30 to 40 air changes per hour for frozen cargoes.

7.4 Air Duct Systems

7.4.1 The air ducts, together with all branches and couplings, supplying refrigerated air to insulated "Port Hole" containers in holds, are to be made airtight. For design purposes, however, an air leakage rate of 0.5% of total volume flow at the design pressure for each duct is to be taken.

7.4.2 Where air ducting is insulated on the internal surfaces, provision is to be made to prevent retention of odour which may taint subsequent cargo.

7.4.3 Couplings are to be of a type that has been approved by the Society. Prototypes are to be tested under all operating conditions, witnessed by the Surveyor, to demonstrate that they extend, retract and separate satisfactorily from a "container end wall" at the minimum temperature condition.

7.4.4 Where couplings are pneumatically actuated, the compressed air piping, valves and fittings are to be in accordance with the applicable requirements of Part VI of the Rules and are to be protected against freezing. The air supply lines are to be strength pressure tested to 1.5 times the design pressure.

7.4.5 The compressed air system referred to in 7.4.4 above is to incorporate moisture traps to ensure the air supply is sufficiently dry to prevent ice formation when cargo cell temperatures are below 0°C.

7.4.6 In order to protect against icing, the outer surface of the coupling connections is to be insulated.

7.4.7 Delivery and return air ducts for each container are to be fitted with a thermo meter. Where a group of containers is being served by one air cooler with common fans, the individual thermometers may be replaced by common thermometers for the delivery air.

7.5 Duct Air Leakage and Distribution Tests

7.5.1 Air leakage tests on at least 10% of ducting, selected at random, are to be carried out to the satisfaction of the Surveyor before the insulation is applied. If deemed necessary, the Surveyor may require further testing to demonstrate airtightness of ducting. The air leakage from each duct will depend on several factors and, while complete airtightness is to be the objective, the air leakage rate for design purposes is not to exceed 0.5% of total volume flow at the design pressure of 250 Pa.

7.5.2 In the case of prefabricated ducts, the prototype is to be subjected to air distribution, heat leakage and air leakage tests. Each production duct is to be tested for air leakage and is not to exceed the prototype test results by more than 5%. Additionally, one duct in 50 or part here of is to be tested for heat leakage and the results are not to exceed the prototype test results by more than 10%.

7.5.3 In all cases when prefabricated sections are assembled on board, the tests as detailed in 7.5.2, are to be carried out aboard the ship.

7.5.4 On application from the Owner, the air leakage tests on air ducts installed aboard the ship, as detailed in 7.5.1 to 7.5.3, may be omitted provided that:

(a) The installation is designed with at least 20% surplus refrigerating capacity, or

(b) Assignment of a temperature notation for the installation be deferred until verified by a thermal balance test to the Surveyor's satisfaction.

7.5.5 All ducts are to be tested for air distribution to the containers, at the manufacturer's works, by measuring the flow of air from the supply couplings while the fan is operated at full speed against the designed pressure. The air flow at each coupling is to meet the specified figure within ±5%.

7.5.6 Systems comprising rigid prefabricated ducts complete with coolers and fans are to be tested for air distribution at the place of manufacture. The remaining tests are to be carried out aboard the ship.

7.6 Cell Air Conditioning Arrangements

7.6.1 The cell air conditioning equipment and ducting, and/or insulation of the holds, deckheads, sides and tank tops, is to be such as to maintain a uniform temperature throughout the cell and to ensure the ship's steelwork is maintained above the minimum temperature acceptable for the steel grade.

Chapter 8

Carriage of Refrigerated Containers (CRC)

8.1 General Requirements

8.1.1 The requirements of this chapter apply to container ships classed with the Society, where a Carriage of Refrigerated Containers (**CRC**) notation as described in 1.4.5 of Part I of the Rules is requested. The requirements are additional to the classification requirements for ships contained in other applicable parts of the Rules.

8.1.2 This **CRC** notation may be applied to any ship which has the ability to carry refrigerated containers. The requirements of this Chapter cover refrigerated containers stowed on deck as well as in a hold space. A descriptive note may be assigned in addition to the **CRC** notation giving details of electrical power and type of cargoes stowed.

8.1.3 An example of a typical class **CRC** notation for a container ship classed with the Society, fitted with a ventilation system and electrical plug-in points for deck and hold stowed refrigerated containers built under Special Survey, would be:

"**CRC (230/140)** to maintain 230 hold-stowed and 140 deck-stowed refrigerated containers operating at their design condition with a 24 hour average external ambient air temperature of +35°C"

8.1.4 An example of a typical descriptive note, which may be assigned in addition to the class **CRC** notation to provide additional information about the ship's ability to carry refrigerated containers, would be:

"**CRC (2,800 kW)** provided with a power generating capacity of 2,800 kW dedicated to supplying the container plug-in points"
"**CRC (60%/40%)** provided with the stowage ratio of 60% deep frozen and 40% chilled cargoes"

8.1.5 The Rules do not cover any requirements for alarm and monitoring systems that may be fitted to container refrigeration units.

8.1.6 Where the proposed ventilation arrangement is novel in design, or the ventilation system involves the use of an arrangement different from that specified in the following sections, special tests may be required and a suitable descriptive note may be assigned.

8.1.7 Where a dedicated fresh water circulation system is installed to supply cooling water to containers fitted with an optional water cooled condenser, the fresh water system will also need to comply with the relevant requirements of the Rules.

8.2 Definitions

8.2.1 **Design conditions** mean the lowest design internal container temperature and the design maximum hold space temperature.

8.2.2 **Ventilation system** means a forced ventilation arrangement using mechanical fans to supply and/or extract air from the hold space.

8.2.3 **Balanced ventilation system** means a ventilation system consisting of a combination of forced draught and induced or natural draught, to produce a pressure condition in the hold space approximately equal to atmospheric pressure.

8.2.4 **Independent ventilation system** means a ventilation system that is in no way connected to another ventilation system and there is no provision available to allow connection to another ventilation system.

8.2.5 **Hold space** means an enclosed space containing refrigerated containers. The containers are usually restrained within cell guides. For hatch coverless ships, hold space means the space below the hatch coamings.

8.2.6 **Container cell** means the position of an individual container. This is usually within a set of vertical cell guides and is normally enclosed by transverse stringers located above and below the container.

8.2.7 **Standard container** means a 40-foot equivalent unit (FEU) standard production container constructed incompliance with the Rules for the Construction and Certification of Freight Containers, or another recognized Container Certification Scheme in accordance with ISO 1492/2 requirements. The container may be of the normal or "high-cube" type.

8.2.8 **Refrigerated container** means a standard container designed and constructed to a recognized international standard and primarily intended for carrying refrigerated cargoes, and which is adequately insulated to reduce heat loss through the boundary walls and made air tight through effective seals; and also with an individual refrigeration unit either permanently installed or portable and requiring an electrical power supply, and where necessary, a cooling water system supplied from the vessel.

8.2.9 **Stowage ratio** means the proportion of deep frozen cargo in relation to banana or chilled cargoes. Unless specifically stated, the stowage ratio will be deemed to be 50% deep-frozen and 50% chilled cargo.

8.2.10 **Container plug-in point** means an electrical socket located at each applicable container location on deck and each cell location below deck being in accordance with Annex L of ISO 1496-2: 1996.

8.2.11 **Blackout** means that the main and auxiliary machinery installations, including the main power supply, are out of operation but the services for bringing them into operation (e.g. compressed air, starting current from batteries etc.) are available.

8.2.12 **Stack factor** means the ratio of the actual heat flowing into the containers forming the stack, to the heat which would flow into the same containers if all their surfaces completely exposing to hold temperature.

8.3 Plans and Particulars

8.3.1 The following plans and particulars regarding the hold ventilation systems and the electrical supplies to container plug-in points are to be submitted for appraisal before construction is commenced.

8.3.2 Plans of ventilation arrangements:

(a) Location and installation details of each hold space ventilation system showing duct arrangement and sizes.

(b) Details of all mechanical ventilation fans including locations, number, duty at design conditions and power consumption.

(c) Details of air inlets including number, type, size and locations

(d) Details of air outlets including number, type, size and locations.

(e) Details and locations of dampers and flaps if applicable.

8.3.3 Plans of hold spaces:

(a) Refrigerated container stowage plans, including sectional elevation and plan views.

(b) Design pressure or vacuum in each hold space.

(c) Details of hatch cover sealing arrangements.

(d) Personnel access arrangements.

(e) Details and locations of hold temperature measurement sensors.

(f) Details of any pressure/vacuum safety valves.

8.3.4 Ventilation throughput:

(a) Specified air throughput rate and proposed method of measurement.

(b) Design temperature rise in the hold space and corresponding diurnal external ambient air temperature and relative humidity.

(c) Schematic arrangement of the ventilation system showing proposed air volume and velocity at junctions.

8.3.5 Plans of deck-stowed containers:

(a) Refrigerated container stowage plans, including sectional elevation and plan views.

(b) Details of access arrangements for maintenance and monitoring of refrigeration units fitted to deck-stowed containers.

8.3.6 Hull structure:

(a) Details of associated openings through the hull structure are to be submitted.

8.3.7 Electrical:

In addition to the applicable requirements of Part VII, the following information and plans specific to the container plug-in points and ventilation system are to be submitted:

(a) Power supply arrangements to the deck stowed refrigerated containers.

(b) Power supply arrangements to the hold spaces towed refrigerated containers.

(c) Power supply arrangements to the ventilation system.

(d) Single-line diagram of the ventilation system. This is to include rating of motors, insulation type, size and current loading of cables and make, type and rating of protective devices.

(e) A schedule of normal operating loads of the ventilation system estimated for the design conditions expected.

8.3.8 Control equipment:

In addition to the applicable requirements of Part VII, the following information and plans specific to the ventilation system are to be submitted:

(a) Line diagram of control circuits.

(b) List of monitored, control and alarm points.

(c) Locations of control panels and consoles.

(d) Details of alarm system, including location of control panel and audible and visual warning devices.

8.3.9 Testing:

(a) Details of the testing and commissioning programme, including instrumentation to be used, are to be submitted.

8.4 Ventilation and Hold Temperature

8.4.1 Ventilation system

(a) Means are to be provided to maintain the hold space at an acceptable temperature by either, the direct removal of the waste heat from the refrigerant equipment of each container, or by the dissipation of the waste heat using large quantities of external ambient air. In each case the system is to be arranged in such a way as to minimize its effect on the hold space temperature. This may be accomplished by the use of a ventilation system of a mechanical supply and/or extract type.

(b) The selection of a maximum allowable hold temperature is to be agreed between the designer and Operator/Owner. Whilst the recommendations given in the Rules do not stipulate a maximum allowable hold temperature, generally it is not to exceed +45°C dry bulb. Guidance is to be sought from container manufacturers on the maximum allowable ambient air temperature. When determining the maximum allowable hold temperature, the maximum number of refrigerated containers within the hold space, operating at their design condition, is to be taken into consideration.

(c) The ventilation system is to have sufficient capacity to remove or dissipate the heat from each designated refrigerated container cell and maintain the hold temperature at or below the maximum allowable hold temperature.

(d) The volume of air to be supplied or exhausted from a hold space per refrigerated container is at the discretion of the ventilation system designer. For guidance purposes, an indication of the amount of air required for a standard FEU having an air cooled condenser operating at the example notation as stated in 8.1.3 is as follows:

(i) Simple supply only system 90 m^3/min.

(ii) Supply and ducted exhaust system 75 m^3/min.

(iii) Sealed exhaust system 37 m^3/min.

(e) The design of the hold space is to be compatible with the type of ventilation system proposed. For the supply and ducted exhaust systems, the semi enclosure of each stringer level may be beneficial. For a simple supply only system the provision of multiple gratings in each stringer level would benefit the free circulation and removal of warm air.

(f) Only container cells served by the ventilation system are to be used for the transportation of refrigerated containers.

(g) The design heat rejection for each container cell and the total hold space heat rejection, including any heat imparted from the ventilation system fans, if applicable, are to be stated. Guidance on heat rejection values is given below in 8.4.2(c).

(h) The minimum quantity of air supplied or extracted for each container cell and for each hold space is dependent on the type of system proposed and to be stated.

(i) The ventilation system designer is to stipulate the maximum allowable back pressure occurring within the hold space. Due regard needs to be given to this value when selecting the ventilation fans and their ability to operate efficiently against the proposed maximum back pressure. The lower the back pressure, the more efficient the system and, hence, the lower the electrical power requirement to drive the fan motors for a given air throughput.

(j) For supply air systems, the supply air outlet at each container location is to be such as to provide a flow of air towards the container's integral refrigeration system. Consideration is to be given to the use of movable spigot outlets or ducting to allow both standard and high-cube containers to be stowed in any location.

(k) The positions of supply air inlets and exhaust air outlets are to be such as to reduce the possibility of short cycling. An adequate distance is to be maintained between inlet and outlet vents on open deck.

(l) The effect of warm exhaust air on deck-stowed refrigerated containers is to be taken into consideration. Similarly, the effect of warm exhaust air from deck-stowed refrigerated containers on the inlet air to the hold is to be considered.

(m) Arrangements are to be provided to permit a rapid shutdown and effective closure of the ventilation system in each hold space in case of fire.

(n) Ventilation ducts which penetrate the deck and/or hatch coaming, including dampers/closures, are to be made of steel and their arrangement is to satisfy the relevant Administration. The use of nonmetallic flexible ducts, local to each container location, will be acceptable provided the material demonstrates suitable low flame spread characteristics.

8.4.2 Heat balance

(a) The amount of heat absorbed from the hold space by each container, which is used to determine the design air change rate, is to be stated.

(b) The heat gain or loss from all adjacent spaces, such as fuel oil tanks, ballast tanks, engine room, etc., is to be stated.

(c) The heat rejection from the refrigeration unit of a standard TEU or FEU container when working at low temperature (-18°C), chill temperature (+2°C) and banana carriage temperature (+13°C), used to determine the design air change rate, is to be stated. The following FEU kW values may be used for guidance purposes:

(i)	Frozen cargo (-18°C/+38°C)	7.0 kW
(ii)	Chill cargo (+2°C/+38°C)	10.0 kW
(iii)	Banana cargo (+13°C/+38°C)	13.0 kW

(d) The above heat rejection values are for the container during normal operation after the cooling down period of a non-pre cooled cargo.

(e) The stowage ratio, for the carriage of containers at different internal temperatures, which is used to determine the design air change rate, is to be stated.

(f) When an extraction ventilation system is proposed, a stack factor of 0.9 may be used in the heat balance calculations. If a ventilation system using supply air only is proposed, then no stack factor can be allowed.

8.4.3 Fan redundancy

(a) A single supply or exhaust fan is not to be used for multiple container stack locations.

(b) Individual container cells may be fed by a system having a single mechanical fan or fans to supply and/or extract air.

(c) Installed standby fans are not required. However, a minimum of one replacement fan, or fan blade assembly and motor, of each size is to be carried onboard. Fans are to be arranged to enable each to be replaced whilst the remaining systems in operation.

8.4.4 Hull structures

(a) Special consideration will be given to installations using hull spaces for air distribution, rather than dedicated ductwork.

(b) Consideration is to be given to measures to prevent ingress of water into air inlets and exhaust outlets, where applicable.

8.5 Electrical, including Container Plug-in Sockets

8.5.1 General

(a) In addition to the requirements of Part VII, the following are to be complied with:

(i) Electrical power for the ventilation system is to be provided by one or more separate feeder circuit(s) from the main switchboard.

(ii) Under sea-going conditions, the number and rating of service generators are to be sufficient to supply all container plug-in socket outlets and the hold space ventilation system in addition to the ship's essential services, when any one generating set is out of action.

(b) The choice between a low (440 V) or high (6,600 V) distribution system serving the container plug-in point is considered a purely commercial decision. Consideration needs to be given to the fault level of the generating equipment selected and the total generating capacity of the ship. Independent of the system voltage, only the dedicated plug-in socket outlet kW value will be stated in the notation.

(c) Where a distribution system exceeding 1,000 VAC is employed, the plug-in socket outlets for each hold space may be fed from a local transformer and the following are to be complied with:

(i) Transformers are to be fed from individual circuits divided between different sections of the main switchboard.

(ii) The electrical power for the ventilation system may be fed locally from each transformer.

(d) Container receptacles and plugs of different electrical ratings are not to be interchangeable. They are to be in accordance with ISO standard 1496-2 or equipment compatible with ISO standard.

8.5.2 Plug-in socket outlet supply transformers

(a) A standby transformer serving the container plug-in socket outlets is to be provided. However, if the **CRC** notation is not assigned, then there is no specific requirement covering the installation of a standby power supply.

(b) If a standby transformer is to be provided, then the exact requirements are open to interpretation and consideration is to be given to the contents of IACS Unified Interpretation SC 83 with regard to the equipment provided.

8.5.3 Container plug-in socket outlets

(a) The distribution and sub-circuit cabling for the container plug-in socket outlets is to be rated at the full load capacity (maximum rated capacity).

(b) Groups of container plug-in socket outlets may be fed from a number of independent sub circuits.

(c) Sub circuits are to be able to be individually switched, thus allowing a sequential start up after a prolonged (12 hours) blackout. A suitable procedure is to be proposed and approved that takes into consideration the requirements of 8.5.4 in addition to the requirements of Part VII.

8.5.4 Generated power for plug-in socket outlets

(a) When determining the dedicated generating power for the plug-in socket outlets, the electrical power drawn by the refrigeration unit of a standard TEU and FEU refrigerated container when working at both low temperature (-18°C) and chill temperature (+2°C), is to be stated.

(b) The following kW values for various cargoes operating at normal design conditions may be used for guidance purposes:

(c) Twenty foot equivalent unit (TEU):

(i)	Frozen cargo (-18°C/+38°C)	5.5 kW
(ii)	Chill cargo (+2°C/+38°C)	7.5 kW
(iii)	Banana cargo (+13°C/+38°C)	see 8.5.4 (e)

(d) Forty foot equivalent unit (FEU) including high-cube containers:

(i)	Frozen cargo (-18°C/+38°C)	8.5 kW
(ii)	Chill cargo (+2°C/+38°C)	11.0 kW
(iii)	Banana cargo (+13°C/+38°C)	see 8.5.4 (e)

(e) If the Owner, charterer or operator has operational data indicating that, for the ship's specific trade (for example banana only cargoes), the power provision for the refrigerated containers requirements exceeds those stated above, then these higher values are to be substituted and submitted for consideration.

(f) The above values are for the container during normal operation after the cooling-down period of a non-precooled cargo.

(g) An overall diversity factor may be applied to the container's total power requirement to all refrigerated container cell locations. Consideration is to be given to the relevant requirements of Part VII. For guidance purposes, the diversity factor is not generally to be less than 0.75.

8.6 Instrumentation, Control and Alarm Systems

8.6.1 General

(a) The alarm system is to indicate failure of each independent ventilation system in each hold space. If a balanced ventilation system is proposed, indication of failure for each individual part is to be given. The alarm system may be integral with the machinery space alarm system or, if fitted, the refrigerated container monitoring system.

(b) Alarms are to be initiated in a manned location. Where alarms are displayed as group alarms in the main machinery space alarm system, provision is to be made to identify individual alarms at a separate control panel.

(c) Alarms are to give both audible and visual warning.

(d) The ventilating equipment is to be capable of being switched on or off remotely from the bridge where it is to be clearly indicated whether the equipment is switched on or off.

(e) Ships designed for the carriage of more than 150 refrigerated containers are to be equipped with a remote monitoring system of power cable transmission type in accordance with a recognized standard e.g. ISO 10368.

8.6.2 Hold space temperature monitoring

(a) At least two temperature sensors are to be provided in each hold space carrying refrigerated containers. The sensors are to be positioned so as not to be directly affected by warm air from the condensers, and to give an indication of the mean air temperature occurring in the hold space.

(b) The hold temperature is to be continually monitored, and recorded, either automatically or manually as a hold temperature log. If temperatures are to be logged manually, then the mean temperature in each hold space is to be recorded.

(c) If the mean hold space temperature rises above the design maximum, then an alarm is to be initiated.

8.6.3 The Rules do not cover any requirements for alarm and monitoring systems fitted to container refrigeration system. It is acceptable to utilize the container power supply cables to transmit signals to a suitable receiver or data logger.

8.7 Hold Access and Maintenance Access Arrangements

8.7.1 Hold pressure/vacuum

(a) The maximum permitted pressure or vacuum that may occur in the hold space is to be stated. A maximum value of 0.15 bar g may be used for guidance purposes. If the ventilation system is capable of producing a positive pressure or vacuum exceeding the design allowable figure, then means are to be provided to protect the hold space against the effect of over pressure or vacuum. If axial supply fans are proposed, even if aerofoil fan blades are fitted, it is unlikely that the fans will be able to produce a pressure above 0.025 bar (250 mm water gauge).

(b) If required, consideration is to be given to the use of a pressure or vacuum relief device or other arrangement set to operate below the maximum allowable hold pressure or vacuum.

(c) The proposed pressure or vacuum relief device for each hold space is to be of adequate size.

8.7.2 Hold access arrangements

Suitable means are to be provided to allow personnel safe access to each hold space when the ventilation system is in operation. Consideration is to be given to the possible over pressure or partial vacuum that may occur in the hold space. The use of an airlock arrangement may need to be considered.

8.7.3 Maintenance access arrangements

(a) Free access to each applicable container cell and hold space is to be provided to allow replacement of refrigeration equipment in the event of failure.

(b) Adequate access is to be provided to allow plugging in, data recording or retrieval and general maintenance of all deck- and hold-stowed refrigerated containers. Suitable means are to be provided to allow the removal of the compressor and electric motor from each refrigerated container.

(c) Suitable safe access is to be provided to each tier of deck-stowed refrigerated containers to allow electrical connection, monitoring and maintenance. The use of fixed platforms, such as lashing bridges, is to be proposed where possible.

8.8 Water Cooler for Refrigeration Units

8.8.1 At least two independently operated fresh water circulation pumps are to be installed. One of the pumps may be used for other services, such as a general service pump.

8.8.2 Each pump capacity is to be sufficient to supply each container at the required flow rate with an excess capacity of at least 10%. This required flow rate is to be obtained from the container manufacturer.

8.8.3 The fresh water system is to provide sufficient flow and even distribution to each container cell. This is to be achieved using all possible combinations of fresh water pumps and dedicated refrigerated container cells.

8.8.4 The temperature of the cooling water is to be maintained in accordance with the container manufacturer's recommendations.

8.8.5 Flexible hoses are to be utilized for connecting the water supply and return pipes. The connectors on the ends of the flexible hoses are to be of a type that self-closes on disconnection. Adequate valves are to be provided to allow isolation of each cargo hold sub circuit in the event of a leak or pipe fracture.

8.8.6 A minimum of two fresh-water to seawater heat exchangers are to be provided. Each is to be rated at100% of the required cooling duty at the notation conditions. The second heat exchanger may be a standby or part of a common central system such as that used for main engine cooling duties. The heat exchangers are to be supplied by at least two separate seawater pumps.

8.9 Deck-stowed Refrigerated Containers

8.9.1 Consideration is to be given to the effect of the warm air discharged from the condenser of each deck stowed refrigerated container. When refrigerated containers are stowed on only two tiers high, it is considered that the warm air from each condenser is dissipated without any undue effect on adjacent containers.

8.9.2 If containers are to be carried three or more tiers high, then consideration is to be given to limiting the effect of short cycling warm discharge air within the central section of the stack. The proposed method(s) for dealing with this effect are to be stated. Possible options would include reserving the central cells of each stack for non-refrigerated containers, to reduce the block effect or providing fans and ductwork to supply ambient temperature air to the bottom of each vertical stack. Trials of any proposed system are to be undertaken.

8.9.3 Any adverse effect that the warm air discharged from the hold space ventilation system has on the decks towed refrigerated containers is to be minimised. Similarly, the warm air discharged from the deck stowed refrigerated containers is to be shielded from entering the hold space ventilating system.

8.10 Inspection and Testing on Completion

8.10.1 General

(a) On completion of construction and all appropriate safety checks, the acceptance tests prescribed in 8.10.2 are to be carried out. Their purpose is to verify the correct functioning of the installation and its ability to maintain the air throughput required for the assignment of the intended class notation.

(b) The proposed test schedules, including methods of testing and details of the test equipment to be provided are to be submitted to the Society for approval before the tests commence. The proposed test methods are to be appropriate for the design of the system installed and are to include such acceptance criteria as:
   (i) Volume of air to be supplied and/or exhausted at each container cell location.
   (ii) Maximum allowable deviation from this air volume.
   (iii) Maximum allowable pressure within the hold space when the system is under normal operating conditions.

(c) Trials of the air distribution system within the hold spaces are to be witnessed by the Surveyor before the ship is put into service and prior to the **CRC** notation certificate being issued. These trials are to be in addition to any tests which may have been carried out whilst commissioning the system.

8.10.2 Acceptance tests

(a) The acceptance tests (see also 8.10.2(b) and (c)) are to comprise the following:

(i) Control and alarm systems are to be tested to demonstrate that they operate correctly.

(ii) The accuracy, calibration and functioning of all instrumentation is to be verified.

(iii) For supply air systems:

(1) Verification of each supply fan's output when running at maximum speed.

(2) Verification of the air discharge rate and operation of any distribution arrangements at each individual container cell location.

(3) During the test, all supply fans serving the same hold space are to be operated simultaneously, thus replicating normal operating conditions.

(4) If a common or multiple supply fan distribution system is fitted, then arrangements are to be verified; firstly, with all supply fans in operation and, secondly, with any one fan out of action.

(iv) For exhaust air systems:

(1) Verification of each exhaust fan's output when running at maximum speed.

(2) The volume of air being extracted from each individual container cell location is to be verified with each exhaust fan running at maximum speed.

(3) All exhaust fans serving the same hold space are to be operated simultaneously, thus replicating normal operating conditions.

(v) For combined supply and exhaust air systems:

(1) Verification of each supply and exhaust fan's output when both are running at maximum speed.

(2) The volume of air being supplied and extracted from each individual container cell location is to be verified.

(3) All fans serving the same hold space are to be operated simultaneously, thus replicating normal operating conditions.

(vi) If the supply and/or exhaust ductwork is prefabricated and installed in one piece testing at the manufacturer's works may be accepted provided the following are considered:

(1) Any change in the supply/exhaust fan(s) output due to differences in electricity supply.

(2) Any de-rating of the fan throughput due to a backpressure or partial vacuum occurring within the hold space during normal operating conditions.

(3) Verification of the test results is to be undertaken in a single hold space.

(vii) If the air volume required to meet the class notation cannot be verified during testing for practical reasons, assignment of the notation is to be deferred until system is demonstrated being able to achieve the specified air throughput within each hold space during a loaded voyage.

(b) Where a number of identical fan and duct work installations are constructed and fitted within each holds pace, the acceptance trials required in 8.10.2 (a) need only be carried out in two separate hold spaces, provided that the results are satisfactory.

(c) Where the same system is installed on a number of identical sister ships for the same Owner and by the same shipyard, the testing in accordance with 8.10.2 (a) will only be required on the first ship of the series, provided that the results are satisfactory.

(d) The effect of exhausting warm hold space ventilation air on the operation of the integral air-cooled condensers of deck stowed containers is to be established under normal operational conditions. The discharge from hold space discharges is to be suitably modified if necessary.

8.10.3 Testing of cooling water system

(a) Cooling water piping that is welded in situ is to be hydraulically strength tested at 1.5 times the design pressure, but in no case less than 0.35 MPa.

(b) A distribution test is to be carried out to ensure that even fresh water distribution to each container as well as sufficient flow is achieved. As the fresh water system may be somewhat complicated, this test is to be carried out with care, using all possible combinations of fresh water pumps installed.

(c) If required, the distribution test can be carried out without containers, utilizing flexible hoses for connecting the water supply and return pipes together. The return valves are to be partly closed or flexible pipe may be crimped to represent the condenser pressure drop. Water flow meters are to be installed at the highest and the lowest container levels to verify equal water flow.

(d) The capacity of each pump is to be measured by a flow meter with an accuracy of ±3%. Alternatively, this capacity could be obtained from manufacturer's pump characteristic curves if the static pressure difference across pump under test conditions is measured.

(e) Sea-water pumps and heat exchangers are normally subjected to a functional test only.

8.11 Spare Gear

8.11.1 Adequate spares, together with the tools necessary for maintenance or repair of the ventilation systems are to be carried on board ship. The spares are to be determined by the Owner according to the design and intended service.

8.11.2 A minimum of one replacement fan, or complete fan impeller and motor assembly for each size fitted is to be carried onboard.

8.11.3 The maintenance of the spares is the responsibility of the Owner.

Chapter 9
Electrical Installation

9.1 General

9.1.1 Where the refrigerating machinery is to be electrically driven, the requirements of Part VII, Chapter 4 are to be complied with if applicable.

9.1.2 The generating capacity available for the refrigerated installation is to be sufficient to supply power to the installation during cooling down of a complete cargo to, and maintenance of, the notation temperature conditions in all refrigerated spaces at the Rule maximum ambient and seawater temperatures.

9.1.3 Electrical equipment is not to be installed in spaces in which ammonia refrigerant is used or stored unless it is essential for operational purposes. Where electrical equipment is installed in such spaces the requirements in 9.2 are to be complied with.

9.2 Electrical Equipment for Use in Explosive Gas Atmospheres

9.2.1 Electrical equipment operated in the event of ammonia leakage, such as vapor detection and alarm system, is to be intrinsically safe type.

9.2.2 Lighting fittings in these spaces are to be of a certified safe-type and be arranged on at least two independent final branch circuits. Switches and protective devices are to interrupt all lines or phases and are located outside the space.

9.2.3 Where electric motors driving ventilation fans are located within the spaces, within ventilation ducts, or within three metres of ventilation openings, they are to be of a certified safe-type.

9.2.4 Electrical equipment not a certified safe-type is to de-energize automatically if the ammonia concentration within the space exceeds 10000 ppm.

9.2.5 Cables in these spaces are to be armored and the penetrations are to be through gastight fittings.

Chapter 10
Instrumentation, Control, Alarm, Safety and Monitoring Systems

10.1 General

10.1.1 The control and monitoring systems are to ensure that the selected carriage temperature for the individual cargo spaces is maintained during all service conditions. The monitoring system is to be provided for refrigerating machinery and refrigerated cargo space temperatures.

10.1.2 For fruit carriers, the monitoring and control systems are additionally to ensure that the CO_2 levels in cargo spaces are continuously monitored and controlled, and the levels selected are not exceeded during all service conditions. The sensors are to be suitable positioned in the cargo spaces and are to be located away from the fresh air ducts.

10.2 Instrumentation

10.2.1 All compressors are to be provided with the following instrumentation and automatic shutdowns:

(a) Indication of suction pressure (saturated temperature), including intermediate stage, if applicable.

(b) Indication of discharge pressure (saturated temperature), including intermediate stage, when applicable.

(c) Indication of lubricating oil pressure.

(d) Indication of cumulative running hours (screw compressors).

(e) Automatic shutdown in the event of low lubricating oil pressure.

(f) Automatic shutdown in the event of high discharge pressure, see also 4.13.7.

(g) Automatic shutdown in the event of low suction pressure.

10.2.2 The automatic safety equipment is to be designed to fail safe and the arrangements are to be such that the compressors can be operated manually with the safety equipment out of action.

10.2.3 For installations greater than 25 kW the following instrumentation, additional to that required by 10.2.1, is to be provided:

(a) Indication of lubricating oil temperature.

(b) Indication of cooling water outlet temperature.

(c) Indication of cumulative running hours (reciprocating compressors).

(d) Indication of suction and discharge temperatures.

10.3 Control, Alarm and Safety Systems

10.3.1 Where the refrigerating system is fitted with automatic or remote controls, so that under normal operating conditions it does not require any manual intervention by the operators, it is to be provided with the alarms required by 10.3.2 and 10.3.3.

10.3.2 Alarms are to be initiated in the event of the following compressor fault conditions:

(a) High discharge pressure.

(b) Low suction pressure.

(c) Low oil pressure.

(d) High discharge temperature.

(e) High oil temperature.

(f) Motor shutdown.

10.3.3 Alarms are also to be initiated in the event of the following fault conditions:

(a) Failure of condenser cooling water pumps.

(b) High condenser cooling water outlet temperature.

(c) Failure of air cooler fans.

(d) High and low refrigerated air delivery temperatures.

(e) High secondary refrigerant temperatures.

(f) Failure of secondary refrigerant pump.

(g) Failure of air refreshing fans.

(h) Low level in secondary refrigerant header tank.

10.3.4 All refrigerated spaces and air cooler rooms are to be fitted with at least one alarm call button located near the exit.

10.4 Temperature Monitoring and Recording

10.4.1 Temperature sensors are to be of a type which has been approved by the Society. The number of sensors and their locations in refrigerated cargo spaces are to be arranged in such a way that temperature reading is possible without entering the space and such as to give a true measurement of the temperatures within the refrigerated spaces and of the cooler delivery and return air temperatures.

10.4.2 At least one automatic recorder is to be provided for the remote monitoring and continuous recording of air temperatures within the refrigerated spaces, and delivery and return air temperatures of individual air coolers. Where only one recorder is installed, at least one sensor in each refrigerated space or in its air distribution system is to be connected to a separate remote temperature indicating instrument.

10.4.3 Where the equipment controlling the temperature of the air delivered from the air coolers is equipped with a temperature indicator, this indicator will be given consideration as a standby instrument.

10.4.4 In the case of freezer fishing vessels, where the catch is frozen on board and stored in a refrigerated space, thermometer(s) hung within each space(s) will be accepted as the standby temperature indicator, provided the space is accessible at all times.

10.4.5 Automatic temperature recorders and temperature indicators are to be of a type which has been approved by the Society. Approval will be granted on the basis of compliance with 10.4.6 and 10.4.7, together with satisfactory environmental testing in accordance with the requirements of Part VIII. This is to include low temperature testing at the class notation minimum temperatures for any components which may be installed in environments subject to temperatures below ambient.

10.4.6 The measuring range of all temperature instrumentation is to cover the entire anticipated temperature range plus an additional ±5°C and is to register to 0.1 of a degree Celsius.

10.4.7 The accuracy of the temperature measuring equipment is to be within ±0.5°C for frozen cargo and ±0.2°C for fruit cargo.

10.4.8 A spirit-in-glass thermometer is to be carried onboard for checking purposes, which is to be calibrated to a recognized National Standard.

10.4.9 Thermometer tubes with their flanges and covers are to be insulated from deck plating, and on weather decks they are to be so arranged that water will not run down the tubes when temperatures are being taken.

10.4.10 The inside diameter of thermometer tubes is to be not less than 50 mm, and the tubes are not to be in contact with cold decks.

10.4.11 Where thermometer tubes pass through compartments other than those which they serve, they are to be efficiently insulated.

10.5 Refrigerant Detection Systems

10.5.1 A fixed refrigerant detection system is to be provided in the refrigerating machinery space, the discharge pipes from pressure relief valves, ventilation outlet ducts and the cargo chambers, where appropriate.

10.5.2 The alarm system is to comply with the applicable requirements of the Rules and, as a minimum requirement, the system is to activate at a low-level concentration to give warning of refrigerant leaks, and a high-level concentration corresponding to the refrigerant's safe occupational level.

10.5.3 Detection equipment is to be so designed that it may be readily tested and calibrated, and failure of the equipment is to initiate an alarm.

10.5.4 The location of the detectors is to be determined relative to the layouts of the individual compartments and machinery spaces and are to be indicated on the plan submission.

10.5.5 For carbon dioxide systems, spaces such as machinery rooms, storage compartments, production areas on fishing vessels and valve stations, where leakage may occur, are to be fitted with detectors. Welded pipelines passing through passageways or access ducts are not considered possible leakage areas.

10.5.6 Audible and visual alarms are to be activated, located both inside and outside the affected space. The alarms are to be readily identifiable and be visible and audible in all locations within the space housing the refrigeration equipment.

10.6 Ammonia Vapour Detection and Alarm Equipment

10.6.1 A fixed detector system for ammonia is to comply with the requirements contained in 10.5.2.

10.6.2 The location of the detectors is to be determined relative to the layouts of the individual spaces and is to be indicated on the plan submission.

10.6.3 Ammonia vapour detectors are to be provided in the refrigeration machinery compartment, associated access ways, the exhaust ducts, the ammonia store room and the discharge pipes from pressure relief valves.

10.6.4 Sufficient detectors are to be provided to monitor the total areas of the above spaces.

10.6.5 For vapour detection in relief valve discharge pipes, see 4.13.4.

10.6.6 Details of the refrigerant detector set points and operational philosophy are to be submitted for appraisal.

Chapter 11

Personnel Safety Equipment and Systems

11.1 Personnel Safety Equipment

11.1.1 Access doors and hatches to the refrigerated spaces and air cooler spaces are to be provided with an external locking arrangement.

11.1.2 Access ways to the refrigerated spaces are to be designed to facilitate escape in emergencies, and the removal of stretcher-borne personnel.

11.1.3 Access ways and air cooler spaces are to be provided with an independent lighting system in accordance with the requirements of Part VII, Chapter 2.1.7, with the means of locking the switches in the "on" position.

11.1.4 Where ammonia is used in refrigerating systems, the following items of safety equipment are to be provided as a minimum, and positioned in accessible protected storage(e.g. locked glass fronted cabinets) located outside the machinery compartment:

(a) Two sets of ammonia protective clothing (including helmet, boots and gloves).

(b) Two portable battery powered hand lamps (to be of certified safe-type).

(c) Two sets of self-contained breathing apparatus.

(d) Two full face mask respirators.

(e) Two fire-resistant life-lines.

(f) Two firemen's axes.

(g) Two heavy duty adjustable spanners.

(h) Two wheel wrenches.

(i) Irrigation facilities or eye wash bottles containing an eyewash solution, distilled water or non-carbonated mineral water.

(j) Hand or foot-operated douches providing a copious supply of clean water, located outside the compartment's doors. See 3.2.4(i).

11.2 Personnel Warning Systems

11.2.1 A system to monitor the well-being of crewmembers entering the refrigerated spaces is to be provided.

11.2.2 The system is to be such that at a predetermined time, after initiation, the crew member(s) receives warning that he must indicate his well-being by accepting the warning.

11.2.3 The system is to be designed and arranged such that only an authorized person has access for enabling and disabling it and setting the appropriate intervals.

11.2.4 It is to be possible to acknowledge the warning by means of illuminated switches situated near the access doors or hatches of each refrigerated space or chambers within the space.

11.2.5 In the event that the crew member(s) fail(s) to respond and accept the warning within an agreed specified time, the system is to immediately initiate an alarm on the bridge and in the engineers' accommodation. Manual initiation of the alarm system from the refrigerated spaces is to be possible at any time.

11.2.6 The system is to comply with the relevant requirements of Part VIII Automatic or Remote Control and Monitoring Systems.

Chapter 12

Acceptance Trials

12.1 Tests after Completion

12.1.1 On completion of construction, the acceptance tests prescribed in 12.4 are to be carried out to verify the correct functioning of the refrigerated cargo installation and its ability to maintain the lowest notation temperature conditions required for the assignment of the intended class notation.

12.1.2 The proposed test schedules, which should include methods of testing and test facilities provided, are to be submitted for approval before these acceptance tests are commenced.

12.2 Thermographic Survey

12.2.1 The insulated envelope of refrigerated cargo ships and, where applicable, fish factory ships, fishing vessels, fruit juice carriers and container ships is to be scanned using a infra-red thermal imaging camera. The main purpose of carrying out the infra-red scan is to verify the efficiency of the insulation system.

12.2.2 During the course of, or prior to, the acceptance trials all inner insulated surfaces, including tank tops, bulkheads, ‘tween decks, insulated hatches, coamings and weather decks are to be subject to an infra-red scan.

12.2.3 Where internal obstructions preclude an internal scan, it is to be carried out externally.

12.2.4 The scan is to be conducted with the ‘tween deck and main holds in total darkness and with air coolers/cooling grids isolated and all heat sources disconnected. The temperature difference, cargo hold to ambient air or seawater temperature, is to be 15K or more.

12.2.5 Any deficiencies or abnormalities revealed are to be investigated and repaired to the extent considered necessary by the Surveyor.

12.3 Thermal Balance Test

12.3.1 During the refrigeration test of newly installed refrigeration systems, a thermal balance test is to be carried out, so as to determine the minimum chamber temperature as required in the design and running conditions when the chamber temperature and the capacity of the plant are balanced.

12.3.2 The thermal balance test is to be carried out in the presence of the Surveyor.

12.3.3 When the chambers are cooled down to the minimum designed temperature and maintained constant for a stabilized period, the thermal balance test is to be commenced.

12.3.4 The heat balance test is to last for 8 hours. During the test, the temperature of the chambers is to be maintained at the minimum designed temperature and is not to be reduced by more than 1°C.

12.3.5 The thermal test may be evaluated in accordance with the relevant programme or standard accepted by the Society.

12.3.6 On completion of the thermal test, a thermal balance calculation is to be carried out and submitted.

12.4 Acceptance Tests

12.4.1 The acceptance tests (see also 12.4.2 and 12.4.3) are to comprise the following:

(a) Verification of control, alarm, safety and refrigerant detection systems.

(b) Test simulating failure of selected components such as compressors, fans and pumps, to verify correct functioning of alarms and systems in service.

(c) Verification of accuracy, calibration and functioning of temperature control, monitoring and recording instrumentation.

(d) Verification of air cooler fan outputs running at maximum speed, and air circulation rates and distribution arrangements in individual refrigerated spaces or chambers. The latter is to be undertaken firstly with all coolers in operation and secondly with anyone cooler or fan out of action.

(e) Verification of air refreshing and heating arrangements.

(f) Verification of personnel safety devices and warning systems in refrigerated spaces.

(g) Refrigeration and thermal balance tests to demonstrate the capability of the combined refrigerating plant and insulation envelope to maintain the lowest class notation temperature to be assigned. See 12.3.

(h) Refrigeration and thermal balance tests for refrigerated container ships carrying "Port Hole" type insulated containers. If the prescribed thermal balance tests cannot be carried out due to the number of insulated containers available in the shipyard being inadequate, then, alternatively, the following tests will be accepted:
   (i) Compressor capacity test; and
   (ii) Duct heat leakage test on at least 20% of the insulated ducting selected at random; and
   (iii) Cell heat leakage test.

(i) Thermographic scan to be carried out as required by 12.2.

12.4.2 Where a number of identical installations are constructed for the same Owner and by the same shipyard, the refrigeration and thermal balance tests required in 12.4.1(g), need only be carried out on two of the series, provided the results are satisfactory.

12.4.3 Where the cells of "Port Hole" type insulated containers are not insulated, a heat leakage test will be required on the first ship of the series only.

12.5 Sea Trials

12.5.1 Where the class notation includes the carriage of fruit, or includes fishing vessels that have the refrigerating capacity to freeze down their catch, the following records are to be kept during the first loaded voyage:

(a) Refrigerated cargo or container ships:

Refrigerating machinery logs and temperature records for the refrigerated cargo spaces or containers, demonstrating the installation's capability to cool down the full cargo of fruit and maintain the notation temperature conditions.

(b) Fishing vessels:

Refrigerating machinery and freezing equipment logs and temperature records for the refrigerated cargo spaces, demonstrating the installation's capability to freeze the catch and maintain the notation temperature conditions.

12.6 Reporting of Tests

12.6.1 On completion of the acceptance tests prescribed in 12.4, two copies of the test schedule for the refrigerated cargo installation, giving details of all recorded data and thermal heat balance results, signed by the Surveyor and Builder are to be provided. One copy is to be placed on board the ship and the other submitted to the Society.

12.6.2 At the end of the first loaded voyage a copy of the logs and temperature records requested in 12.5.1(a) and (b), as applicable, signed by the ship's Chief Engineer, are to be submitted to the Society.

Tel: *+886 2 25062711*
Fax: *+886 2 25074722*
E-mail: *cr.tp@crclass.org*
Website: *http://www.crclass.org*
© CR – All rights reserved

財團法人驗船中心
CR CLASSIFICATION SOCIETY

RULES FOR THE CONSTRUCTION AND CLASSIFICATION OF STEEL SHIPS 2022

PART XI – MATERIALS

July 2022

財團法人驗船中心
CR CLASSIFICATION SOCIETY

RULES FOR THE CONSTRUCTION AND CLASSIFICATION OF STEEL SHIPS 2022

PART XI – MATERIALS

July 2022

RULES FOR THE CONSTRUCTION AND CLASSIFICATION OF STEEL SHIPS

PART I CLASSIFICATION AND SURVEY

PART II HULL CONSTRUCTION AND EQUIPMENT

PART III SPECIAL SERVICE AND TYPE OF SHIPS

PART IV MACHINERY INSTALLATIONS – CONSTRUCTION AND SHAFTING

PART V BOILERS, PRESSURE VESSELS, THERMAL OIL HEATERS AND INCINERATORS

PART VI PIPING AND PUMPING SYSTEMS

PART VII ELECTRICAL INSTALLATIONS

PART VIII AUTOMATIC OR REMOTE CONTROL AND MONITORING SYSTEMS

PART IX FIRE PROTECTION, DETECTION AND EXTINCTION

PART X REFRIGERATED CARGO INSTALLATIONS

PART XI MATERIALS

PART XII WELDING

PART XIII NAVIGATIONAL SAFETY SYSTEMS

PART XIV GOAL-BASED SHIP CONSTRUCTION STANDARDS SHIPS

PART XV HULL CONSTRUCTION AND EQUIPMENT FOR SHIPS LESS THAN 90 M IN LENGTH

List of major changes in Part XI from 2019 edition

8.1~8.11	Amend No.1	4.4.4(c)	Amend No.2
18.2	Amend No.1	9.2	Amend No.2
Table XI 18-1	Amend No.1	9.2	Amend No.2
2.2.1(b)	Amend No.2	9.3	Amend No.2
3.1.1	Amend No.2	10.3.6	Amend No.2
Table XI 3-2	Amend No.2	Fig. XI 10-2	Amend No.2
3.2.2(b)(iii)	Amend No.2	Fig. XI 10-3	Amend No.2
3.3.1(d)	Amend No.2	Fig. XI 10-4	Amend No.2
3.3.2(c)	Amend No.2	Fig. XI 10-5	Amend No.2
3.4.1(a)	Amend No.2	Fig. XI 10-6	Amend No.2
3.5.1	Amend No.2	10.3.7	Amend No.2
3.5.3	Amend No.2	10.3.8	Amend No.2
3.5.5(b)	Amend No.2	Fig. XI 10-7	Amend No.2
3.6.7	Amend No.2	Table XI 10-3	Amend No.2
3.8.3	Amend No.2	10.3.9	Amend No.2
3.8.4	Amend No.2	10.3.10	Amend No.2
3.10.1	Amend No.2	10.3.11	Amend No.2
3.10.2	Amend No.2	10.3.7	Amend No.2
3.10.3	Amend No.2	17.4.2	Amend No.2
3.10.4	Amend No.2	17.4.3	Amend No.2
Fig. XI 3-6	Amend No.2	Table XI 17-1	Amend No.2
3.10.5	Amend No.2	17.4.4	Amend No.2
Table XI 3-4	Amend No.2	Fig. XI 17-1	Amend No.2
Table XI 3-5	Amend No.2	Table XI 17-2	Amend No.2
Table XI 3-6~3-15	Amend No.2	17.4.5	Amend No.2
Table XI 3-16	Amend No.2		

Acronyms

AIS	Automatic Identification System
ANTS	Automatic Navigation and Track-keeping System
ARPA	Automatic Radar Plotting Aid
BC Code	Code of Safe Practice for Solid Bulk Cargoes
BNWAS	Bridge Navigational Watch Alarm System
CA	Controlled Atmosphere
CDI	Chemical Distribution Institute
COW	Crude Oil Washing
CPA	Closest Point of Approach
CPP	Controllable Pitch Propeller
CSC	International Convention for Safe Containers
CSR	Common Structural Rules
CTOD	Crack Tip Opening Displacement
ECDIS	Electronic Chart Display and Information System
EEBD	Emergency Escape Breathing Devices
ENC	Electronic Navigational Chart
ESP	Enhance Survey Plan
ETA	Emergency Towing Arrangement
FEU	Forty-foot Equivalent Unit
FMEA	Failure Mode & Effect Analysis
FRP, GRP	Fibreglass Reinforced Plastics
FTP Code	International Code for Application of Fire Test Procedures
GBS	Goal-Based ship construction Standards
GDC	General Dry Cargo
GLONASS	Global Navigation Satellite System
GMDSS	Global Maritime Distress and Safety System
GPS	Global Positioning System
HAZ	Heat Affected Zone
HHP anchor	High Holding Power anchor
HSC	High Speed Craft
HTS	High Tensile Steel
IACS	International Association of Classification Societies
IBC Code	International Code for the Construction and Equipment of Ships Carrying Dangerous Chemicals in Bulk
ICS	The International Chamber of Shipping

IEC	International Electrotechnical Commission
IGC Code	International Code for the Construction and Equipment of Ships Carrying Liquefied Gases in Bulk
ILO	International Labour Organization
IMDG Code	International Maritime Dangerous Goods Code
IMO	International Maritime Organization
ISO	International Standards Organization
LAN	Local Area Network
LCS	Loading Computer System
LEL	Lower Explosive Limit
LRIT	Long-range Identification and Tracking of ships
MARPOL	International Convention for the Prevention of Pollution from Ships
MARVS	Maximum Allowable Relief Valve Setting
MEPC	Marine Environment Protection Committee
MLC	Maritime Labour Convention
MSC	Maritime Safety Committee
NDT	Nondestructive Testing
OCIMF	The Oil Companies International Marine Forum
OOW	Officer Of the Watch
PA	Public Address
PMA	Permanent Means of Access
PMS	Planned Machinery Maintenance Scheme
RH	Relative Humidity
RIT	Remote Inspection Techniques
PSPC	Performance Standard for Protective Coating
SENC	System Electronic Navigational Chart
SHHP anchor	Super High Holding Power anchor
SOLAS	International Convention for the Safety of Life at Sea
SRE	Ship Recycling
STCW	International Convention on Standards of Training, Certification and Watch-keeping for Seafarers
STS operation	Ship-To-Ship operation
S-VDR	Simplified Voyage Data Recorder
TCPA	Time to CPA
TEU	Twenty-foot Equivalent Unit
THD	Total Harmonic Distortion

TMCP	Thermo-Mechanical Controlled Processing
UPS	Uninterruptible Power Supply
VDR	Voyage Data Recorder
VEC	Vapor Emission Control

RULES FOR THE CONSTRUCTION AND CLASSIFICATION OF STEEL SHIPS

PART XI
MATERIALS

CONTENTS

Chapter 1 General Requirements 1

1.1 General 1
1.2 Works Approval and Manufacture 2
1.3 Chemical Composition 2
1.4 Heat Treatment 2
1.5 Retests and Additional Tests 3
1.6 Repair of Defects 4
1.7 Identification and Marking 4
1.8 Certification 4

Chapter 2 Test Specimens and Mechanical Tests 6

2.1 General Requirements 6
2.2 Tensile Tests 6
2.3 Bending Tests 10
2.4 Impact Tests 11
2.5 Flattening Tests for Pipes and Tubes 12
2.6 Flaring Tests for Tubes 12
2.7 Flanging Tests for Tubes 13
2.8 Reverse Flattening Tests for Welded Tubes 13
2.9 Crack Tip Opening Displacement (CTOD) Tests for Metallic Materials 14

Chapter 3 Rolled Steels for Hull Construction 15

3.1 General 15
3.2 Approval and Manufacture 16
3.3 Chemical Composition 18
3.4 Heat Treatment and Condition of Supply 24
3.5 Mechanical Properties 31
3.6 Quality Inspections 40
3.7 Repair of Defects 41
3.8 Additional Requirements for Through Thickness Properties ("Z" quality) 42
3.9 Identification and Marking 45
3.10 Requirements for Use of Extremely Thick Steel Plates 46
3.11 Weldability Tests 51

Chapter 4 Rolled Steels for Boilers, Pressure Vessels and Low Temperature Service 53

4.1 General 53
4.2 Rolled Steels for Boilers and Pressure Vessels to be used at High Temperature 53
4.3 Rolled Steel Plates for Pressure Vessels to be used at Atmospheric Temperature 55
4.4 Rolled Steels for Low Temperature Service 57
4.5 Test Specimens 59
4.6 Quality Inspections 60

Chapter 5 Steel Pipes and Tubes 61

5.1 General 61
5.2 Steel Tubes for Boilers and Heat Exchangers 61
5.3 Steel Pipes for Pressure Pipings 63
5.4 Steel Pipes for Low Temperature Service 65
5.5 Hydraulic Tests 67
5.6 Quality Inspections 67

Chapter 6 Steel Castings 68

6.1 General 68
6.2 Manufacture 68
6.3 Chemical Composition 68
6.4 Heat Treatment 69
6.5 Mechanical Properties 69
6.6 Non-Destructive Examination 72
6.7 Repair of Defects 73
6.8 Special Requirements for Crank Throws 74

Chapter 7 Iron Castings 75

7.1 General 75
7.2 Manufacture 75
7.3 Tests and Inspections 75
7.4 Repair of Defects 76

Chapter 8 Steel Forgings 77

8.1 Scope 77
8.2 Manufacture 77
8.3 Chemical Composition 78
8.4 Heat Treatment, Including Surface Hardening and Straightening 79
8.5 Mechanical Tests 80
8.6 Mechanical Properties 87
8.7 Inspection 89
8.8 Rectification of Defective Forgings 90
8.9 Identification of Forgings 90

8.10 Certification 91
8.11 Ferritic Steel Forgings for Low Temperature Service 91

Chapter 9 Stainless Steels and Clad Steels 94

9.1 Stainless Steels 94
9.2 Stainless Steel Castings for Propellers 100
9.3 Stainless Clad Steels 104
9.4 Intercrystalline Corrosion Tests of Stainless Steel 105

Chapter 10 Copper and Copper Alloys 106

10.1 Copper and Copper Alloy Pipes and Tubes 106
10.2 Copper Alloy Castings for Valves, Liners, Bushes and Other Fittings 106
10.3 Copper Alloy Castings for Propellers 107

Chapter 11 Aluminium Alloys 118

11.1 General 118
11.2 Rolled and Extruded Aluminium Alloy Products 118
11.3 Aluminium/Steel Transition Joints 124

Chapter 12 Anchors 126

12.1 General 126
12.2 Manufacture and Construction 126
12.3 Tests and Inspections 126
12.4 Marking 128

Chapter 13 Chains 130

13.1 General 130
13.2 Chain Materials 130
13.3 Anchor Chains 133
13.4 Offshore Mooring Chains 137

Chapter 14 Steel Wire Ropes 143

14.1 General 143
14.2 Tests and Inspections 143
14.3 Marking 145

Chapter 15 Fibre Ropes 147

15.1 General 147
15.2 Tests and Inspections 147
15.3 Marking 147

Chapter 16 Flexible Hoses 149

16.1 General 149
16.2 Construction 149
16.3 Application 149
16.4 Approval and Tests 149

Chapter 17 Side Scuttles 151

17.1 General 151
17.2 Construction 151
17.3 Materials 151
17.4 Tests and Inspections 152
17.5 Marking 154

Chapter 18 Windows 155

18.1 General 155
18.2 Construction 155
18.3 Materials 156
18.4 Testing 156
18.5 Marking 156

Chapter 19 Non Metallic Materials 157

19.1 General 157
19.2 Machinery Chocking Compounds (Epoxy Resin Chocks) 157
19.3 Synthetic Bearing Materials for Rudder and Stern Shafts 158

Chapter 1
General Requirements

1.1 General

1.1.1 Scope

All materials, intended for use in the construction or repair of ships, other marine structures, machinery, boilers, pressure vessels and piping systems which are classed or are proposed for classification to the Society, are to be manufactured, tested and inspected in accordance with the requirements in this Part.

1.1.2 Equivalence

Materials which comply with national or international or proprietary specifications may be accepted provided that these specifications give reasonable equivalence to the requirements of this Part.

1.1.3 Special consideration

Where materials having characteristics differing from those prescribed in this Part are used, the detailed data relating to the process of manufacture, chemical composition, mechanical properties, etc. of the materials are to be submitted for approval and the testing of the materials may be modified to suit the specifications as approved in connection with a particular case. The materials for critical applications (e.g. military purposes) may be approved by the Society on a case-by-case basis, considering the applicable specifications.

1.1.4 Survey

The following requirements are to apply for survey of product approval specified in relevant chapters and works approval specified in 1.2.1:

(a) Prior to the submission of materials for inspection and acceptance, manufacturers are to provide the Surveyor with details of the order (as applicable), specification and any special conditions additional to the requirements of the Rules.

(b) The manufacturers are to allow the Surveyor access to all relevant parts of the works and are to afford the Surveyor all necessary facilities and information to enable him to verify the approved procedure of manufacturing and selection of test samples, the witnessing of mechanical tests and the examination of materials as required by this Part.

(c) Where the materials have an appropriate certificate, the tests and examinations may be fully or partially dispensed with subject to the further consideration and special approval by the Society.

(d) For product approval only, the tests and examination are to be carried out before the materials are dispatched from the manufacturer's works. The results thereof are to comply with the requirements of the Rules. All materials are to be to the satisfaction of the Surveyor before final acceptance.

(e) In the event of any material proven unsatisfactory in the process of being worked, machined or fabricated subsequently, such material is to be rejected or retested notwithstanding any previous certification.

1.1.5 The following definitions are applicable to this Part:

(a) Item: A single casting, forging, plate, tube or other rolled product as delivered.

(b) Piece: The rolled product from a single slab or billet, or from a single ingot if this is rolled directly into plates, strips, sections or bars.

(c) Batch: A number of similar products or pieces presented as a group for acceptance testing.

1.2 Works Approval and Manufacture

1.2.1 Works approval

(a) The materials specified in this Part are to be made at works and/or foundries. Works approval are to be in accordance with both "Guidelines for Survey of Products for Marine Use" for procedural requirements, and relevant chapter for the properties and the test requirements of the materials. In order that a works or foundry can be considered for approval, the manufacturer is required to demonstrate to the satisfaction of the Society that the necessary manufacturing and testing facilities are available and are supervised by qualified personnel.

(b) A specified procedure of approval tests generally consists of an inspection of the manufacturing process, chemical composition, heat treatment, mechanical properties, weldability and possibly the quality control, is to be carried out under the supervision of the Surveyor, and the results are to be to the satisfaction of the Society. When a manufacturer has more than one works or foundry, the approval is only valid for the individual works or foundry for which the test procedure has been carried out.

1.2.2 Manufacture

(a) The steel is to be manufactured by the basic oxygen, electric furnace or open hearth processes or by other processes specially approved by the Society.

(b) The steel intended for rolling or forging is to be cast in metal ingot moulds or by an approved continuous casting process. The size of the ingot, or of the continuous cast billet or slab, is to be proportional to the dimensions of the final product. Adequate top and bottom discards of each ingot are to be made to ensure soundness in the portion used for further processing. If necessary, the steel works may be required to carry out periodical sulphur prints or other suitable proving tests by the Society to ensure soundness of the steel.

(c) Manufacture of materials other than steel are to be in accordance with the requirements of relevant chapter in this Part.

1.3 Chemical Composition

1.3.1 The chemical composition is to be determined from ladle analyses by the manufacturer in an adequately equipped and competently staffed laboratory.

1.3.2 A check of chemical analysis of suitable samples from products may also be required at the discretion of the Surveyor.

1.4 Heat Treatment

1.4.1 Materials are to be supplied in the condition specified in, or permitted by, the relevant chapters of this Part.

1.4.2 Heat treatment is to be carried out in properly constructed furnaces which are efficiently maintained and have adequate means for control and recording of temperature. The dimensions of the furnace are to be such as to allow the whole item to be uniformly heated to the necessary temperature. Alternative methods will be specially considered for the treatment of very large components.

1.5 Retests and Additional Tests

1.5.1 Where the result of any test other than an impact test, fails to satisfy the requirements, two additional tests of the same type may be taken. For acceptance of the material, satisfactory results are to be obtained from both of these additional tests.

1.5.2 Retest of impact test

(a) Where the results of the impact test satisfy the following requirements, the piece or batch of the materials represented by the test may be accepted.

(b) The results of the initial impact test are to satisfy the following conditions:

Where the average value of the three initial impact specimens meets the required minimum requirement, and only one individual value may be below the required average value and, of this, not less than 70% of that value.

(c) Requirements to permit the retest of the initial impact test areas follows:

Where the results from the three initial impact specimens fails to meet the above (b) requirements, an additional set of three impact test specimens taken from the location as close to the initial specimens as possible may be tested provided that, of the initial impact test results, not more than two individual values are below the required average value and, of these, not more than one is less than 70% of that value.

(d) The results of the retest of the initial impact test are to satisfy the following conditions:

Where the results obtained from the above (c) additional test are to be combined with the initial impact test results to form a new average which, for acceptance, is to meet the required average value. Additionally, for these combined results, not more than two individual values are below the required average value and, of these, not more than one is less than70% of that value.

1.5.3 When unsatisfactory results are obtained from tests representative of a batch of material, the item or piece from which the tests were taken is to be rejected. The remainder of the material in the batch may be accepted provided that two further items or pieces are selected and tested with satisfactory results. If the tests from one or both of these additional items or pieces give unsatisfactory results, the batch is to be rejected.

1.5.4 When a batch of material is rejected, the remaining items or pieces in the batch may be resubmitted individually for test, and those which give satisfactory results may be accepted.

1.5.5 At the option of the manufacturer, rejected material may be resubmitted as another grade and may then be accepted, provided that the test results comply with the appropriate requirements.

1.5.6 When material which is intended to be supplied in the as rolled or hot finished condition fails a test, it may be suitably heat treated and re-submitted for test. Similarly materials supplied in the heat treated condition may be re-heat treated and re-submitted for test.

1.5.7 If any test fails because of faulty preparation, visible defects in the specimen or, in case of tensile test, because of fracturing outside the range permitted for the appropriate gauge length, the defective test specimen may be disregarded and replaced by 1 additional test specimen taken from the same test sample.

1.6 Repair of Defects

1.6.1 Small surface imperfections may be removed by mechanical means provided that, after such treatment, the dimensions are acceptable, the area is proved free from defects and the rectification has been completed in accordance with any applicable requirements of subsequent chapters of this Part and to the satisfaction of the Surveyor.

1.6.2 Welding for the purpose of repairing defects can only be permitted by the appropriate specific requirements for the extent and procedure of repair provided that the agreement by the Surveyor is obtained before the work is commenced. When the repair has been agreed it is necessary in all cases to prove by suitable methods of non-destructive examination that the defects have been completely removed before welding is commenced. Welding procedures and inspection on completion of repair are to be in accordance with the appropriate specific requirements and are to be to the satisfaction of the Surveyor.

1.7 Identification and Marking

1.7.1 The manufacturer is to adopt a system of identification, which will enable all finished material to be traced to the original cast, and the Surveyor is to be given full facilities for so tracing the material when required. When any item has been identified by the mark of a Surveyor, or his deputy, this is not to be removed until an acceptable new identification mark has been made. Failure to comply with this condition will render the item liable to rejection. Modified arrangements for the identification of closed-die forgings may be agreed by the Surveyor.

1.7.2 The materials which have satisfactorily complied with the requirements and finally been accepted by the Society are to be clearly marked by the manufacturer in at least one place on each item with the Society's mark ℞ and the following particulars:

(a) Name or mark of the manufacturer.

(b) Material grade.

(c) Identification number which will enable the full history of the item to be traced (such as Charge No., Test No., Piece No., etc.).

(d) Name or mark of the purchaser, if required.

(e) In addition to the above, castings and forgings after being finally accepted are to be marked with a filing number assigned by the attending Surveyor, test pressure where applicable and date of final inspection.

1.7.3 Hard stamping is to be used for identification marking except where this may be detrimental to the material, in which case stenciling, painting, electric etching, sealing or other suitable means is to be used.

1.7.4 Where a number of identical items of small size are securely fastened together in bundles, a durable label or tag giving the required particulars may be attached to each bundle.

1.8 Certification

1.8.1 Test certificates for rolled materials

(a) Test certificates of the finally accepted ferrous or non-ferrous rolled materials are to be furnished to the Surveyor for his signature. Each test certificate is to include the following particulars:

(i) Name of purchaser and manufacturer.
(ii) Order number and contract number or ship number for which the material is intended, if known.
(iii) Identification number and/or symbol.
(iv) Specification or grade of the material.
(v) Description and dimensions of the material.
(vi) Cast number and chemical composition of ladle samples, and carbon equivalent, if required.
(vii) Mechanical test results.
(viii) Condition of supply when other than as rolled.
(ix) De-oxidation procedure.

(b) Before test certificates are signed by the Surveyor, the manufacturer is required to provide a written declaration stating that the material described herein has been made by a certain process (state process) approved by CR Classification Society for material (state grade) in accordance with the Rules and has been satisfactorily tested in the presence of the Society's Surveyor. The declaration will be accepted if stamped or printed on each test certificate with the name of works and signed by an authorized representative of the manufacturer.

(c) When ingot, slab or billet is not produced at the works at which it is rolled, a certificate is to be supplied by the manufacturer to the Surveyor stating the process of manufacture, the cast number and the chemical composition of ladle samples. In this case, the works at which the ingot, slab or billet was produced is to have been approved by the Society.

1.8.2 Certification of castings and forgings

(a) The manufacturer is to provide the Surveyor with a written statement giving the following particulars for each casting, forging or batch of castings, forgings which has been accepted:
(i) Name of purchaser and order number.
(ii) Description of castings or forgings and material grade.
(iii) Identification number.
(iv) Steel making process, cast number and chemical analysis of ladle samples
(v) General details of heat treatment.
(vi) Results of mechanical tests.
(vii) Test pressure, where applicable.

(b) Where applicable, the manufacturer is to provide a signed statement regarding ultrasonic examination, together with a statement and/or sketch detailing all repairs by welding.

(c) When ingot, slab or billet is not produced at the works at which it is forged, a certificate is to be supplied by the manufacturer stating the process of manufacture, cast number and the chemical composition of ladle samples. In this case, the works at which the ingot, slab or billet was produced is to have been approved by the Society.

Chapter 2

Test Specimens and Mechanical Tests

2.1 General Requirements

2.1.1 The preparation of test specimens and the applications for testing to the various materials are to be in accordance with the requirements in this chapter.

2.1.2 Preparation of test specimens

(a) Unless otherwise agreed between the manufacturer and the Society, all test samples are to be selected in the presence of the Surveyor before they are detached from the material, and identified by suitable markings which are to be maintained during the preparation of the test specimens.

(b) The test sample is to be representative of the item or batch and is not to be separated until all the specified heat treatment has been completed.

(c) Where test sample is cut from products by shearing or flame cutting, a reasonable margin is required to allow sufficient material to be removed from the cut edges during machining of the test specimens.

(d) Test specimens are to be prepared in such a manner that they are not subjected to any significant cold straining or heating during straightening or machining.

(e) If a test specimen fails because of faulty preparation or incorrect operation of the testing machine, it may be discarded and replaced by a new test specimen prepared from material adjacent to the original test specimen.

2.1.3 Testing machines

(a) All tests are to be carried out by competent personnel on machines of approved types. Testing machines are to be maintained in a satisfactory and accurate condition, and are to be rechecked and recalibrated at approximately annual intervals. This calibration is to be traced to a nationally recognized authority and is to be to the satisfaction of the Society. A record of such rechecking and recalibration is to be kept on a file for information.

(b) Tensile test machine load cells are to be calibrated with an accuracy within ± 1% in accordance with ISO 7500-1 or other recognised standard.

(c) Impact testing machines are to be calibrated in accordance with ISO 148-2 or other recognised standard.

2.2 Tensile Tests

2.2.1 Tensile test specimens

(a) There are different types of tensile test specimens which are to be applied according to the materials to be tested as shown in Table XI 2-1.

(b) The tolerances on specimen dimensions are to be in accordance with ISO 6892-1:current edition or other recognized standards as appropriate.

2.2.2 Yield stress and proof stress

(a) The yield stress is the value of stress measured at the commencement of plastic deformation at yield, or the value of stress measured at the first peak obtained during yielding even when that peak is equal to or less than any subsequent peaks observed during plastic deformation at yield. The test is to be carried out with an elastic stress rate within the following limits:

Modulus of Elasticity of material (E) N/mm^2	Rate of the material elastic stress (N/mm^2)/s	
	Min.	Max.
$<$ 150,000	2	20
$\geqq$ 150,000	6	60

(b) When no well defined yield phenomenon exists, the 0.2% proof stress under load (non-proportional elongation) is to be determined from an accurate load/extension diagram by drawing a line parallel to the straight elastic portion and a distance from it where the amount represents 0.2% of the extensometer gauge length. The point of intersection of this line with the plastic portion of the diagram represents the load for calculating the 0.2% proof stress (R_p 0.2). The rate of loading is to be as stated in 2.2.2(a) above.

(c) For austenitic and duplex stainless steel products and welding consumables, if requested by the contract, the 1% proof stress (R_p 1.0) may be determined in addition to 0.2% proof stress (R_p 0.2). The rate of loading is to be as stated in 2.2.2(a) above.

2.2.3 Tensile strength

After reaching the yield or proof load, for ductile materials the machine speed during the tensile test is not to exceed that corresponding to a strain rate of 0.008 s^{-1}. For brittle materials, such as cast iron, the elastic stress rate is not to exceed 10 N/mm^2 per second.

2.2.4 Fracture elongation

(a) The elongation value is valid if the fracture occurs at least the following distance from the end marks of the gauge length:

round test specimen: 1.25d

flat test specimen: W + t

where d, W and t are defined as stated in Table XI 2-1.

(b) Where a test with satisfactory value of elongation, the test is to be deemed valid even fractured in the positions beyond the range as stated in 2.2.4(a) above.

(c) Proportional test specimens with a gauge length of $5.65\sqrt{A}$, where A is the cross-sectional area of the test specimen, have been adopted as the standard form of test specimen, and the elongation values required in subsequent Chapters of this Part are given for test specimens of this proportion.

(d) If the material is a ferritic steel of low or medium strength and not cold worked, the elongation as measured on a non-proportional test specimens with a gauge length (L_0) other than $5.65\sqrt{A}$, the required elongation (E_0) on that gauge length may after agreement be calculated from the following formula:

$$E_0 = 2E_5\left(\frac{\sqrt{A}}{L_0}\right)^{0.40}$$

Where E_5 is the required elongation for test specimens with a gauge length of $5.65\sqrt{A}$.

Table XI 2-1
Tensile Test Specimens

Type	Illustration	Description (1) (Unit in mm)	Applicable for
T1	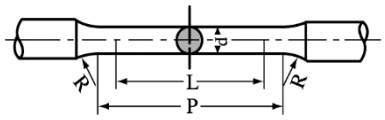	Round tensile test specimen (2) Type: T1A T1B L = 70 5d d = 14 d P ≅ 85 L + d R ≥ 10 10	All materials except grey iron castings
T2	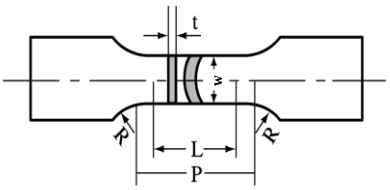	Rectangular tensile test specimen (3) Type: T2A T2B T2C L= $5.65\sqrt{A}$ 200 $5.65\sqrt{A}$ t= t_m t_m t_m W= 25 25 ≥ 12 P= $L+2\sqrt{A}$ 225 L+2W R≥ 25 25 25	Types T2A and T2B for rolled materials except bars Types T2A and T2C for pipes and tubes
T3	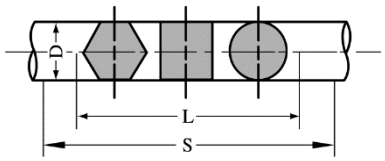	Full Section tensile test specimen(4) L = $5.65\sqrt{A}$ S ≅ L + D	Rolled bars
	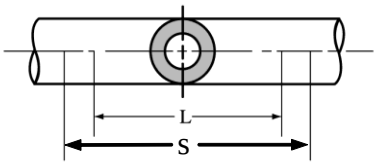		Pipes and tubes
T4	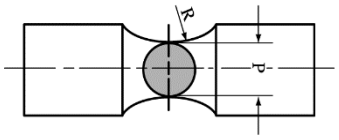	Grey iron casting tensile test specimen(5) d = 20 R = 25	Grey iron castings

Notes:

(1) The notations used are defined as follows:

d	=	Diameter of test specimen.	A	=	Cross-sectional area of test specimen.
D	=	Outside diameter or width across flat of material as rolled.	L	=	Gauge length of test specimen.
t	=	Thickness of test specimen.	P	=	Parallel length of test specimen.
t_m	=	Thickness of material.	R	=	Transition radius of test specimen.
S	=	Length between grips or plugs, whichever is smaller.	W	=	Width of test specimen.

(2) Type T1 test specimens:

(a) In case of a proportional test specimen, T1B with L = 5d = $5.65\sqrt{A}$, the gauge length may be rounded off the nearest 5 mm provided that the difference between this length and L is less than 0.1L.

(b) For spheroidal or nodular graphite iron castings and materials with a specified elongation less than 10%, R ≥ 20 mm in T1A and R ≥ 1.5d in T1B specimens may be accepted.

(3) Type T2 test specimens:

(a) When the capacity of the available test machine is insufficient to allow the use of Type T2A and T2B test specimens in full thickness, this may be reduced by machining one of the rolled surfaces. Alternatively, for materials over 40 mm thick, Type T1 test specimen may be used subject to the axes of the test specimen is located at one quarter of the thickness from one of the rolled surfaces.

(b) The parallel length of test specimens for pipes and tubes is not to be flattened, but the enlarged ends may be flattened for gripping in the test machine.

(4) Type T3 test specimens:
  (a) The tensile test of rolled sections, pipes and tubes may be made in full section of the product up to the capacity of the testing machine.
  (b) In the case of rolled sections with D exceeding 35 mm, the test specimen may be machined to a diameter of about 25 mm, or may conform to Type T1 test specimen.
  (c) The ends of Type T3 test specimen for pipes and tubes may be plugged for gripping in the testing machine.
(5) Type T4 test specimen is to be prepared from cast coupon of approx. 30 mm in diameter.

2.3 Bending Tests

2.3.1 Bending test specimens are to be of size and dimensions given in Table XI 2-2 according to the kind of materials.

2.3.2 The test is considered to be satisfactory if, after bending, the specimens are free from cracks and lamination. Small cracks at the edges of the test specimens are to be disregarded.

Table XI 2-2
Bending Test Specimens

Type	Illustration	Description (1) (Unit in mm)	Applicable for
B1	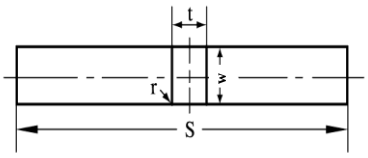	Rectangular bending test specimen (2) Rolled materials / Forgings Castings t= t_m / 20 W= 30 / 25 r= 1~2 / (tension side) S= 11t / 220	Rolled materials except bars, Forgings and Castings
B2	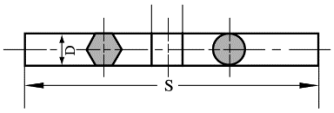	Full section bending test specimen (3) S = 9D + mandrel dia.	Rolled bars
	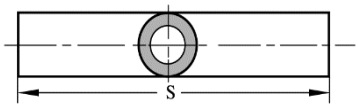		Pipes

Notes:
(1) The notations used are defined as follows:
  t = Thickness of test specimen.
  t_m = Thickness of material.
  W = Width of test specimen.
  r = Edge radius of test specimen.
  D = Outside diameter or width across flat of material as rolled.
  S = Length of test specimen.
(2) Type B1 test specimens:
  (a) For castings and forgings, all sides of the test specimens are to be machine finished.
  (b) For rolled materials, the bending test is to be made in full thickness of the product. Where the thickness of materials exceeds 25 mm, the thickness of test specimen may be reduced to 25 mm with its surface machined on compression side only.
(3) Type B2 test specimens:
  (a) The bending test of rolled bars and pipes is to be made in full section of product.
  (b) In the case of rolled bars with D exceeding 35 mm, the test specimen may be turned down to a diameter of about 25 mm.

2.4 Impact Tests

2.4.1 Impact tests are to be of either the Charpy V-notch or the Charpy U-notch type as required by subsequent chapters in this Part. The test specimens are to be machined to the dimensions and tolerances given in Table XI 2-3 and are to be carefully checked and verified by suitable means before testing for dimensional accuracy.

2.4.2 The notch of impact test specimen is to be cut in a face of the specimen which was originally perpendicular to the rolled surface. The position of notch is not to be nearer than 25 mm to a flame cut or sheared edge.

2.4.3 For material under 10 mm in thickness, the largest possible size of Charpy V-notch subsidiary test specimen given in Table XI 2-3 is to be prepared with the notch cut on the narrow face. In this case, the average absorbed energy is not to be less than the value obtained from multiplying the required value by a correction factor given in Table XI 2-4. Impact tests are generally not required when the thickness of the material is less than 6 mm.

Table XI 2-3
Impact Test Specimens

Description \ Type		N1 Charpy V-notch 2 mm	N2 Charpy U-notch 5 mm
Length (mm)	S	55 ± 0.60	55 ± 0.60
Width – Standard (mm)	W	10 ± 0.11	10 ± 0.11
– Subsidiary (mm)	W	7.5 ± 0.11	–
– Subsidiary (mm)	W	5 ± 0.06	–
Thickness (mm)	T	10 ± 0.06	10 ± 0.11
Angle of notch (deg)	θ	45 ± 2	–
Width of notch (mm)	ω	–	2 ± 0.14
Depth below notch (mm)	H	8 ± 0.06	5 ± 0.09
Root radius of notch (mm)	R	0.25 ± 0.025	1 ± 0.07
Distance of notch from end of test specimen (mm)	P	27.5 ± 0.42	27.5 ± 0.42
Angle between plane of symmetry of notch and longitudinal axis of test specimen (deg)	–	90 ± 2	90 ± 2
Illustration Note: The impact test specimens are generally not to include the material nearer than 3 mm to the surface. The position of the notch is not to be nearer than 25 mm to a flame cut or sheared edge.		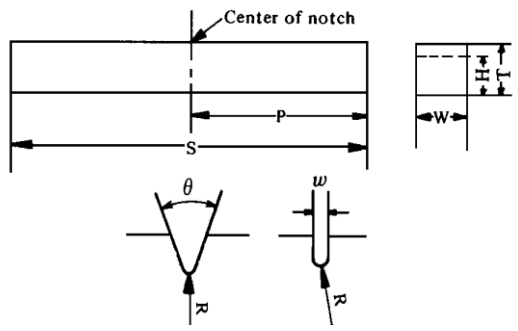	

Table XI 2-4
Corrections to Absorbed Energy for Subsidiary Impact Test Specimens

Width of Test Specimen W (mm)	Correction Factors for Average Absorbed Energy of 3 Test Specimens
7.5	$\frac{5}{6}$
5	$\frac{2}{3}$

2.4.4 The impact test is to be carried out on a Charpy impact testing machine of approved type having a striking velocity between 4.5 and 6 m/sec and a striking energy of not less than 150 J. The temperature of the test specimen is to be carefully controlled to within ±2°C of the specified test temperature given in subsequent chapters of this Part for sufficient time to ensure uniformity throughout the cross-section of the test specimen.

2.5 Flattening Tests for Pipes and Tubes

2.5.1 The test specimen is to be cut with the ends perpendicular to the axis of the pipe or tube. The length of the specimen is to be equal to 1.5 times the outside diameter of the pipe or tube, but is not to be less than 10 mm or greater than 100 mm.

2.5.2 The test specimen is to be flattened at ambient temperature in a direction perpendicular to the axis of the pipe or tube. Flattening is to be carried out between 2 plain parallel and rigid platens until the distance between the platens, measured under load, is not greater than the value given by the following formula:

$$H = \frac{t(1+e)}{e + \frac{t}{D}}$$

where:
H = Distance between flattening platens, in mm.
t = Specified thickness of pipe or tube, in mm.
D = Specified outside diameter of pipe or tube, in mm.
e = Constant dependent on the steel type and detailed in specified requirements. See Tables XI 5-3, 5-5 and 5-7.

2.5.3 For welded pipe or tube, the welded line is to be placed at 90° to the direction of flattening.

2.5.4 After flattening, the specimens are to be free from cracks or flaws. Small cracks at the ends of the test specimens may be disregarded.

2.6 Flaring Tests for Tubes

2.6.1 The test specimen is to be cut with the ends perpendicular to the axis of the tube. The length of the specimen is to be equal to 1.5 times the outside diameter of the tube, but is to be not less than 50 mm. The edges of the end to be tested may be rounded by filing.

2.6.2 The test specimen is to be flared at ambient temperature by means of hardened conical steel mandrel having a total included angle of 45° or 60° as shown in Fig. XI 2-1.

2.6.3 The mandrel is to be forced into the test specimen until the tube at the mouth of the flare is expanded to the outside diameter not less than the value given in Table XI 5-3. The mandrel is to be lubricated, but there is to be no

rotation of the tube or mandrel during the test. After flaring, the expanded portion of the tubes to be free from cracks or other flaws.

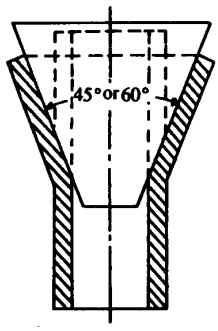

Fig. XI 2-1
Flaring Test for Tubes

2.7 Flanging Tests for Tubes

2.7.1 The test specimen is to be cut with the ends perpendicular to the axis of the tube. The length of the specimen is to be at least equal to the outside diameter of the tube. The edges of the end to be tested may be rounded by filing.

2.7.2 The test specimen is to be flanging formed at ambient temperature by means of hardened conical steel mandrel having a total included angle of approximately 90° as shown in Fig. XI 2-2(a) firstly. The test is to continue with a second forming tool as shown in Fig. XI 2-2(b) until the drifted portion has formed a flange perpendicular to the axis of the test specimen. The external diameter of the flange is to be not less than the value given in Table XI 5-3. The mandrels are to be lubricated, but there is to be no rotation of the tube or mandrels during the test. The cylindrical and flanged portion of the tube is to be free from cracks and other flaws.

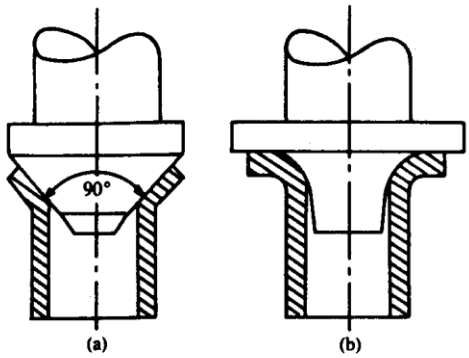

Fig. XI 2-2
Flanging Test for Tubes

2.8 Reverse Flattening Tests for Welded Tubes

2.8.1 The test specimen is to be cut with the ends perpendicular to the axis of the welded tube. The length of the specimen is to be of 100 mm.

2.8.2 The test specimen is to be split longitudinally on the opposite side of the welded line, and then opened and flattened with the weld at the point of maximum bend. There is to be no evidence of cracks or showing flaws on the inside of the welded line, misalignment, lack of penetration or overlap.

2.9 Crack Tip Opening Displacement (CTOD) Tests for Metallic Materials

2.9.1 When specified, the Crack Tip Opening Displacement (CTOD) Tests for metallic materials and weldments shall be carried out according to BS 7448 Parts 1 & 2, or ASTM E1820, or any other recognized standard.

2.9.2 The CTOD test specimens are to be tested in three point bending. Normally the specimens are to be rectangular with B (Thickness) × 2B (Width). For nominal plate thickness equal to or exceeding 80 mm, B (Thickness) × B (Width) specimens may be used.

2.9.3 The CTOD test is to use a testing machine with controllable loading rate and displacement-load synchronous recording device, and the data of test process are to be recorded automatically. The test equipment is to be calibrated annually.

2.9.4 The crack opening displacement gauge is to have an accuracy of at least 1%. It is to be calibrated at least once every day of testing and at intervals of no more than 10 tests. It should be demonstrated that the calibration is satisfactory for the test conditions.

2.9.5 The CTOD test is deemed to be valid and acceptable provided that post-test-data analysis meets all validity criteria of BS 7448 Parts 1 & 2, or ASTM E1820, or any other recognized standard, and the fracture toughness value determined is equal to or greater than the minimum specified value approved by the Society.

Chapter 3
Rolled Steels for Hull Construction

3.1 General

3.1.1 Application

(a) Scope

This chapter gives the requirements for weldable normal, higher and extra high strength hot rolled steels, such as plates, wide flats, sections and bars, intended for use in hull construction.

(b) Thickness

(i) The requirements of this Chapter are primarily intended to apply to rolled steel products not exceeding the thickness limits given in Table XI 3-1 of this Chapter.

(ii) Steel plates supplied in EH47 strength grades (minimum yield stress 460 N/mm^2)

This chapter gives the requirements for steel plates in thickness greater than 50 mm and not greater than 100 mm intended for hatch coamings and upper decks of container ships. For YP47 steels outside scope of the said thickness range, special consideration is to be given by the Society.

(iii) Brittle crack arrest steels

The thickness range of brittle crack arrest steels is over 50 mm and not greater than 100 mm as specified in Table XI 3-5.

(c) Normal and higher strength corrosion resistant steels

The application of normal and higher strength corrosion resistant steels is to be in accordance with the requirement of IACS UR W and other relevant requirements.

(d) Brittle crack arrest steels

(i) The brittle crack designation can be assigned to YP36, YP40 and YP47 steels specified in this chapter, which meet the additional brittle crack arrest requirements and properties defined in this chapter.

(ii) The application of brittle crack arrest steels is to comply with 3.10 of this chapter, which covers longitudinal structural members in the upper deck region of container carriers (such as hatch side coaming, upper deck, hatch coaming top and the attached longitudinals, etc.).

Table XI 3-1
Maximum Thickness of Rolled Steels for Hull Construction

Steel grade designation		Maximum thickness (mm)	
		Plates and wide flats	Sections and bars
Normal Strength Steel	A, B, D, E	100	50
Higher Strength Steel	AH32, DH32, EH32, FH32 AH36, DH36, EH36, FH36 AH40, DH40, EH40, FH40	100	50
	EH47	See 3.1.1(b)(ii) of this Chapter	Not applicable
Extra High Strength Steel	A420, D420, E420, F420 A460, D460, E460, F460 A500, D500, E500, F500 A550, D550, E550, F550 A620, D620, E620, F620 A690, D690, E690, F690 A890, D890, E890 A960, D960, E960	See 3.4.2(c)(ii) of this Chapter	

3.1.2 Application for steels which have different characteristics or greater thickness

(a) For products of greater thickness, certain variations in the requirements may be allowed or required in particular cases after consideration of the technical circumstances involved.

(b) Rolled steels having characteristics differing from the requirements in this chapter may be accepted subject to compliance with the requirements given in 1.1.2 and 1.1.3 of this Part. Such rolled steels are to be given a special designation.

(c) The requirements given in this chapter may also be applicable to the rolled steels intended for use in the construction of machinery. Where rolled slabs, billets and bars used as a substitute for steel forgings, the requirements in Chapter 8 of this Part are to be complied with.

(d) High strength low alloy steels

High strength low alloy steels are to be approved in accordance with "Guidelines for Approval of CRHS-56/70 High Strength Low Alloy Steel for Critical Application" published by the Society.

3.1.3 Additional requirements for through thickness properties ("Z" quality)

When rolled plates or wide flats, intended for welded construction, are subject to significant strains in a direction perpendicular to the rolled surfaces, it is recommended that consideration is to be given to the use of special plate material with improved through thickness properties relating to the structural design, and complied with the requirements given in 3.8 of this Chapter.

3.2 Approval and Manufacture

3.2.1 Approval

(a) Works approval

Rolled steels are to be manufactured at works which have been approved by the Society for the type and grade of steel which is being supplied. Works approval is to be in accordance with the requirements given in 1.2 of this Part, and approval scheme or approval procedure as follows:

(i) Normal and higher strength hull structural steels

(1) Approval scheme for normal and higher strength hull structural steels is to be in accordance with the applicable requirements in appendix of IACS UR W11.

a) Approval of the steel works is to follow a scheme given in the Appendix A.

b) For the steels intended for high heat input welding over 50 kJ/cm, the approval of the manufacturer is to follow a scheme given in the Appendix B.

c) For steels intended for a corrosion resistant designation, the approval of the manufacturer is to additionally follow the scheme given in Appendix C.

(2) Manufacturing approval test for YP47 steel plates is to be in accordance with IACS UR W31.

(ii) Extra high strength steels

The procedure for the approval of the manufacturing process of extra high strength steels is to be in accordance with the appendix in IACS UR W16.

(b) Manufacturer's responsibility

It is the manufacturer's responsibility to assure that effective process and production controls in operation are adhered to within the manufacturing specifications. Where control imperfection inducing possible inferior quality of product occurs, the manufacturer is to identify the cause and establish a countermeasure to prevent its recurrence. Also, the complete investigation report is to be submitted to the Surveyor.

3.2.2 Method of manufacture

(a) Normal strength steels and higher strength steels

Steels are to be manufactured by the basic oxygen, electric furnace or open hearth processes or by other processes specially approved by the Society.

(b) Extra high strength steels

(i) The steels are to be manufactured, by the basic oxygen, basic electric arc furnace or by processes specially approved by the Society.

(ii) Vacuum degassing is to be used for any of the following:

(1) All steels with enhanced through-thickness properties, and

(2) All steels of grade H690, H890 and H960.

(iii) Nitrogen control for extra high strength steel

The steels are to contain nitrogen binding elements as detailed in the manufacturing specification. Also see note 4 in Table XI 3-6 of this Chapter.

3.2.3 Deoxidation

The deoxidation practice used for each grade of rolled steels is to comply with the requirements given in Table XI 3-2.

Table XI 3-2
Deoxidation Practice for Rolled Steels

Material Grade (t = thickness)			Deoxidation Practice
Normal Strength Steels	A	t ≤ 50 mm	Any method except rimmed steel(1)
		t > 50 mm	Killed
	B	t ≤ 50 mm	Any method except rimmed
		t > 50 mm	Killed
	D	t ≤ 25 mm	Killed
		t > 25 mm	Killed and fine grain treated
	E		
Higher Strength Steels	AH32, DH32, EH32, FH32 AH36, DH36, EH36, FH36 AH40, DH40, EH40, FH40 EH47, EH36-BCA, EH40-BCA, EH47-BCA		
Extra High Strength Steels	A420, D420, E420, F420 A460, D460, E460, F460 A500, D500, E500, F500 A550, D550, E550, F550 A620, D620, E620, F620 A690, D690, E690, F690 A890, D890, E890 A960, D960, E960		

Note:

(1) Grade A sections up to a thickness of 12.5 mm may be accepted in rimmed steel subject to the special approval of the Society.

3.3 Chemical Composition

3.3.1 Normal strength steels and higher strength steels

(a) The chemical composition of rolled steels are to be in compliance with the requirements given in Table XI 3-3 and Table XI 3-4 of this Chapter. For steel plates and wide flats over 50 mm in thickness, slight deviations in the chemical composition may be allowed subject to the approval of the Society.

(b) For TMCP steels the following special requirements apply

(i) The carbon equivalent value is to be calculated from the ladle analysis using the formula in note 5 of Table XI 3-4 of this Chapter and to be not greater than the value as required as follows;

Material Grade / Thickness (mm)	AH32 DH32 EH32 FH32	AH36 DH36 EH36 FH36	AH40 EH40 DH40 FH40
t ≤ 50	0.36	0.38	0.40
50 < t ≤ 100	0.38	0.40	0.42

Note:

(1) It is a matter for the manufacturer and shipbuilder to mutually agree in individual cases as to whether they wish to specify a more stringent carbon equivalent.

(ii) The following formula (cold cracking susceptibility) may be used for evaluating weldability instead of the carbon equivalent at the discretion of the Society;

$$P_{cm} = C + \frac{Si}{30} + \frac{Mn + Cu + Cr}{20} + \frac{Ni}{60} + \frac{Mo}{15} + \frac{V}{10} + 5B\ (\%)$$

(iii) In such cases the cold cracking susceptibility value required may be specified by the Society.

(c) For EH47 steel plates

Material specifications for EH47 steel plates are to be as follows. The extent of testing is to be one set of three specimens from each piece as defined in 1.1.5(b) of this Part.

(i) The carbon equivalent C_{eq} is not to be greater than 0.49%, and it is to be calculated from the ladle analysis using the formula in note 5 of Table XI 3-4 of this Chapter.

(ii) Cold cracking susceptibility P_{cm} is not to be greater than 0.22% and it is to be calculated using the formula in 3.3.1(b)(ii).

(d) Brittle crack arrest steels

(i) Brittle crack arrest steels are defined as steel plate with the specified brittle crack arrest properties measured by either the brittle crack arrest toughness K_{ca} or Crack Arrest Temperature (CAT).

(ii) In addition to the required mechanical properties of this chapter for YP36, YP40 and YP47, Brittle crack arrest steels are to comply with the requirements specified in Table XI 3-4 and Table XI 3-5 below.

(iii) The brittle crack arrest properties specified in Table XI 3-5 are to be evaluated for the products in accordance with the procedure approved by the Society. Test specimens are to be taken from each piece, unless otherwise agreed by the Society.

3.3.2 Extra high strength steels

(a) The method of sampling is to follow that carried out for the initial approval tests, either from the ladle, the tundish or the mould in the case of continuous casting. The aim analysis is to be in accordance with the manufacturing specification. All the elements listed in Table XI 3-6 are to be reported.

(b) Elements used for alloying, nitrogen binding, and fine grain treatment, and as well as the residual elements are to be as detailed in the manufacturing specification, e.g. when boron is deliberately added for enhancement of hardenability of the steels, the maximum content of the boron content is not to be higher than 0.005%; and the analysis result is to be reported.

(c) The carbon equivalent value is to be calculated from the ladle analysis. Maximum values are specified in Table XI 3-7 of this Chapter.

(i) For all steel grades, the formula of IIW specified in note 5 of Table XI 3-4 of this Chapter may be used.

(ii) For steel grades H460 and higher, CET may be used instead of C_{eq} at the discretion of the manufacturer, and is to be calculated according to the following formula:

$$CET = C + \frac{Mn + Mo}{10} + \frac{Cu + Cr}{20} + \frac{Ni}{40}\ (\%)$$

Note:

The CET is included in the standard EN 1011-2:2001 used as one of the parameters for preheating temperature determination which is necessary for avoiding cold cracking.

(iii) For TMCP and QT steels with carbon content not more than 0.12%, the cold cracking susceptibility P_{cm} for evaluating weldability may be used instead of carbon equivalent of C_{eq} or CET at manufacturer's discretion and is to be calculated using the formula speicified in 3.3.1(b)(ii) of this Chapter.

Table XI 3-3
Chemical Composition for Normal Strength Steels

Material Grade	Chemical Composition %(2), (3), (4) (ladle samples)					
	C(1) (max.)	Si (max.)	Mn(1) (min.)	P (max.)	S (max.)	Al (acid soluble) (min.)
A	0.21 (5)	0.50	2.5 × C	0.035	0.035	-
B	0.21	0.35	0.80 (6)			
D			0.60			0.015(7), (8)
E	0.18		0.70			0.015 (8)

Notes:

(1) For all grades of steel, Carbon plus 1/6 of the Manganese content is not to exceed 0.40%.

(2) When any grade of steel is supplied in thermo-mechanically controlled processed condition, variations in the specified chemical composition may be allowed or required by the Society.

(3) The amount of residual elements which may have an adverse effect on the working and use of the steel, e.g. Copper and Tin, may be limited by the Society if deemed necessary.

(4) Where additions of any other element have been made as part of the steelmaking practice, the content is to be indicated.

(5) Max. 0.23% for Grade A sections.

(6) When Grade B steel is impact tested, the minimum Manganese content may be reduced to 0.60%.

(7) Content of Aluminium is not required for Grade D steel up to 25 mm in thickness.

(8) For Grade D over 25 mm and Grade E steels, the total Aluminium content may be determined instead of acid soluble content. In such cases the total Aluminium content is to be not less than 0.020%. A maximum Aluminium content may also be specified by the Society if deemed necessary. Other suitable grain refining elements may be used subject to the special approval of the Society.

Table XI 3-4
Chemical Composition for Higher Strength Steels and Brittle Crack Arrest Steels

Material Grade	Chemical Composition(4),(6) (%)															
	C (max.)	Si (max.)	Mn	P (max.)	S (max.)	Al (acid soluble) (min.)	Nb	V	Ti	Cu (max.)	Cr (max.)	Ni (max.)	Mo (max.)	N (max.)	C_{eq}(5) (max.)	P_{cm}(8) (max.)
							total content (max.): 0.12									
AH32, DH32, EH32 AH36, DH36, EH36 AH40, DH40, EH40	0.18	0.50	0.90 ~ 1.60(1)	0.035	0.035	0.015(2),(3)	0.02~ 0.05(3)	0.05~ 0.10(3)	0.02	0.35	0.2	0.40	0.08	-	-	-
FH32, FH36, FH40	0.16		0.90 ~ 1.60	0.025	0.025							0.80		0.009(7)		
EH47(9)	0.18	0.55	0.90~ 2.00	0.020	0.020				0.02(3)		0.25	1.0		-	0.49	0.22
EH36-BCA(9) EH40-BCA(9)	0.18	0.50	0.90~ 2.00	0.020	0.020	0.015(2),(3)	0.02~ 0.05(3),(4)	0.05~ 0.10(3),(4)	0.02(4)	0.50	0.25	2.0	0.08	2.0	0.47 0.49	-
EH47-BCA(9)	0.18	0.55	0.90 ~ 1.60	0.020	0.020	0.015(2),(3)	0.02~ 0.05(3)	0.05~ 0.10(3)	0.02(4)	0.50	0.25	2.0	0.08	2.0	0.55	0.24

Notes:

(1) Up to a thickness of 12.5 mm, the minimum Manganese content may be reduced to 0.70%.

(2) The total Aluminium content may be determined instead of the acid soluble content. In such cases, the total Aluminimum content is to be not less than 0.020%.

(3) The steel is to contain Aluminium, Niobium, Vanadium or other suitable grain refining elements, either singly or in any combination. When used singly the steel is to contain the specified minimum content of the grain refining element. When used in combination, the specified minimum content of each grain refining element is not applicable.

(4) When any grade of higher strength steel is supplied in thermo-mechanically controlled processed condition, variations in the specified chemical composition may be allowed or required by the Society.

(5) When required, the carbon equivalent value (C_{eq}) is to be calculated from the ladle analysis using the following formula:

$$C_{eq} = C + \frac{Mn}{6} + \frac{Cr+Mo+V}{5} + \frac{Ni+Cu}{15} \ (\%)$$

This formula is applicable only to steels which are basically of the carbon-manganese type and gives a general indication of the weldability of the steel.

(6) Where additions of any other element have been made as part of the steelmaking practice, the content is to be indicated.

(7) 0.0012 if Al is present.

(8) Cold cracking susceptibility P_{cm} value is to be calculated using the following formula:

$$P_{cm} = C + \frac{Si}{30} + \frac{Mn}{20} + \frac{Cu}{20} + \frac{Ni}{60} + \frac{Cr}{20} + \frac{Mo}{15} + \frac{V}{10} + 5B(\%)$$

(9) Variations in the specified chemical composition may be allowed subject to approval of the Society.

Table XI 3-5
Requirement of Brittle Crack Arrest Properties for Brittle Crack Arrest Steels

Suffix to the steel grade(1)	Thickness range (mm)	Brittle crack arrest properties(2)(6)	
		Brittle Crack Arrest Toughness K_{ca} at -10°C ($N/mm^{3/2}$) (3)	Crack Arrest Temperature CAT (°C)(4)
BCA1	$50 < t \leq 100$	6,000 min.	-10 or below
BCA2	$80 < t \leq 100$(7)	8,000 min.	(5)

Notes:

(1) Suffix "BCA1" or "BCA2" is to be affixed to the steel grade designation (e.g. EH40-BCA1, EH47-BCA1, EH47-BCA2, etc.).

(2) Brittle crack arrest properties for brittle crack arrest steels are to be verified by either the brittle crack arrest toughness K_{ca} or Crack Arrest Temperature (CAT).

(3) K_{ca} value is to be obtained by the brittle crack arrest test specified in Annex 3 of IACS UR W31.

(4) CAT is to be obtained by the test method specified in Annex 4 of IACS UR W31.

(5) Criterion of CAT for brittle crack arrest steels corresponding to K_{ca}=8,000 $N/mm^{3/2}$ is to be approved by the Society

(6) Where small-scale alternative tests are used for product testing (batch release testing), these test methods are to be approved by the Society.

(7) Lower thicknesses may be approved at the discretion of the Society.

Table XI 3-6
Chemical Composition for Extra High Strength Steels

Delivery condition(1)		N/NR		TMCP		QT	
Chemical composition(2)	Material grade	A420~A460 D420~D460	E420~E460	A420~A890 D420~D690	D890 E420~E890 F420~F690	A420~A960 D420~D690	D890~D960 E420~E960 F420~F690
C	(max. %)	0.20	0.18	0.16	0.14	0.18	
Mn	%	1.0~1.70		1.0~1.70		1.70	
Si	(max. %)	0.60		0.60		0.80	
P(3)	(max. %)	0.030	0.025	0.025	0.020	0.025	0.020
S(3)	(max. %)	0.025	0.020	0.015	0.010	0.015	0.010
Al_{total}(4)	(max. %)	0.02		0.02		0.018	
Nb(5)	(max. %)	0.05		0.05		0.06	
V(5)	(max. %)	0.20		0.12		0.12	
Ti(5)	(max. %)	0.05		0.05		0.05	
Ni(6)	(max. %)	0.80		2.00(6)		2.00(6)	
Cu	(max. %)	0.55		0.55		0.50	
Cr(5)	(max. %)	0.30		0.50		1.50	
Mo(5)	(max. %)	0.10		0.50		0.70	
N	(max. %)	0.025		0.025		0.015	
O(7)	(max. ppm)	Not applicable		Not applicable	50	Not applicable	30

Notes:

(1) See 3.4.2 of this Chapter for definition of delivery conditions.

(2) The chemical composition is to be determined by ladle analysis and is to meet the approved manufacturing specification at the time of approval.

(3) For sections, the P and S content can be 0.005% higher than the value specified in the table.

(4) The total aluminium to nitrogen ratio is to be a minimum of 2:1. When other nitrogen binding elements are used, the minimum Al value and Al/N ratio do not apply.

(5) Total content of Nb+V+Ti ≤ 0.26% and Mo+Cr ≤ 0.65%, not applicable for QT steels.

(6) Higher Ni content may be approved at the discretion of the Society.

(7) The requirement on maximum Oxygen content is only applicable to DH890; EH890; DH960 and EH960.

Table XI 3-7
Maximum C_{eq}, CET and P_{cm} Values for Extra High Strength Steels

<table>
<tr><th rowspan="4">Steel grade</th><th rowspan="4">Delivery condition</th><th colspan="8">Carbon Equivalent (%)</th></tr>
<tr><th colspan="6">C_{eq}</th><th>CET</th><th>P_{cm}</th></tr>
<tr><th colspan="3">Plates</th><th>Sections</th><th>Bars</th><th>Tubulars</th><th colspan="2" rowspan="2">All</th></tr>
<tr><th>t ≤ 50 (mm)</th><th>50 < t ≤ 100 (mm)</th><th>100 < t ≤ 250 (mm)</th><th>t ≤ 50 (mm)</th><th>t ≤ 250 or d ≤ 250 (mm)</th><th>t ≤ 65 (mm)</th></tr>
<tr><td rowspan="3">A420
D420
E420
F420</td><td>N/NR</td><td>0.46</td><td>0.48</td><td>0.52</td><td>0.47</td><td>0.53</td><td>0.47</td><td colspan="2">N.A.</td></tr>
<tr><td>TMCP</td><td>0.43</td><td>0.45</td><td>0.47</td><td>0.44</td><td colspan="3">N.A.</td></tr>
<tr><td>QT</td><td>0.45</td><td>0.47</td><td>0.49</td><td colspan="2">N.A.</td><td>0.46</td><td colspan="2">N.A.</td></tr>
<tr><td rowspan="3">A460
D460
E460
F460</td><td>N/NR</td><td>0.50</td><td>0.52</td><td>0.54</td><td>0.51</td><td>0.55</td><td>0.51</td><td>0.25</td><td>N.A.</td></tr>
<tr><td>TMCP</td><td>0.45</td><td>0.47</td><td>0.48</td><td>0.46</td><td colspan="2">N.A.</td><td>0.30</td><td>0.23</td></tr>
<tr><td>QT</td><td>0.47</td><td>0.48</td><td>0.50</td><td colspan="5" rowspan="12">N.A.</td><td>0.32</td><td>0.24</td></tr>
<tr><td rowspan="2">A500
D500
E500
F500</td><td>TMCP</td><td>0.46</td><td>0.48</td><td>0.50</td><td>N.A.</td><td>0.32</td><td>0.24</td></tr>
<tr><td>QT</td><td>0.48</td><td>0.50</td><td>0.54</td><td>0.50</td><td>0.34</td><td>0.25</td></tr>
<tr><td rowspan="2">A550
D550
E550
F550</td><td>TMCP</td><td>0.48</td><td>0.50</td><td>0.54</td><td>N.A.</td><td>0.34</td><td>0.25</td></tr>
<tr><td>QT</td><td>0.56</td><td>0.60</td><td>0.64</td><td>0.56</td><td>0.36</td><td>0.28</td></tr>
<tr><td rowspan="2">A620
D620
E620
F620</td><td>TMCP</td><td>0.50</td><td>0.52</td><td>N.A.</td><td>N.A.</td><td>0.34</td><td>0.26</td></tr>
<tr><td>QT</td><td>0.56</td><td>0.60</td><td>0.64</td><td>0.58</td><td>0.38</td><td>0.30</td></tr>
<tr><td rowspan="2">A690
D690
E690
F690</td><td>TMCP</td><td>0.56</td><td colspan="2">N.A.</td><td>N.A.</td><td>0.36</td><td>0.30</td></tr>
<tr><td>QT</td><td>0.64</td><td>0.66</td><td>0.70</td><td>0.68</td><td>0.40</td><td>0.33</td></tr>
<tr><td rowspan="2">A890
D890
E890</td><td>TMCP</td><td>0.60</td><td>N.A.</td><td rowspan="3">N.A.</td><td rowspan="3">N.A.</td><td>0.38</td><td>0.28</td></tr>
<tr><td>QT</td><td>0.68</td><td>0.75</td><td>0.40</td><td rowspan="2">N.A.</td></tr>
<tr><td>A960
D960
E960</td><td>QT</td><td>0.75</td><td>N.A.</td><td>0.40</td></tr>
</table>

Notes:

(1) Alternative limits may be specially accepted by the Society.

(2) Application of which formula of carbon equivalent (C_{eq}, CET or P_{cm}) is subject to agreement between the manufacturer and purchaser.

3.4 Heat Treatment and Condition of Supply

3.4.1 Normal strength and higher strength steels

(a) The rolled steels are to be supplied in a condition complying with the requirements given in Table XI 3-8 and Table XI 3-9.

(b) The applicable steel rolling procedures are defined as follows:

(i) AR (As Rolled)

This procedure involves the rolling of steel at high temperature followed by air cooling. The rolling and finishing temperatures are typically in the austenite recrystallization region and above the normalizing temperature. The strength and toughness properties of steel produced by this process are generally less than steel heat treated after rolling or than steel produced by advanced processes.

(ii) N (Normalizing)

Normalizing involves heating rolled steel above the critical temperature, Ac3, and in the lower end of the austenite recrystallization region followed by air cooling. The process improves the mechanical properties of as rolled steel by refining the grain size.

(iii) CR (Controlled Rolling) or NR (Normalizing Rolling)

A rolling procedure in which the final deformation is carried out in the normalizing temperature range, resulting in a material condition generally equivalent to that obtained by normalizing.

(iv) QT (Quenching and Tempering)

Quenching involves a heat treatment process in which steel is heated to an appropriate temperature above the Ac3 and then cooled with an appropriate coolant for the purpose of hardening the microstructure. Tempering subsequent to quenching is a process in which the steel is reheated to an appropriate temperature not higher than the Ac1 to restore toughness properties by improving the microstructure.

(v) TMCP (Thermo-Mechanical Controlled Processing)

This is a procedure which involves the strict control of both the steel temperature and the rolling reduction. Generally a high proportion of the rolling reduction is carried out close to the Ar3 temperature and may involve the rolling in the dual phase temperature region. Unlike controlled rolled (normalized rolling) the properties conferred by TMCP cannot be reproduced by subsequent normalizing or other heat treatment. The use of accelerated cooling on completion of TMCP-rolling may also be accepted subject to the special approval of the Society. The same applies for the use of tempering after completion of the TMCP-rolling.

(vi) AcC (Accelerated Cooling)

Accelerated cooling is a process, which aims to improve mechanical properties by controlled cooling with rates higher than air cooling immediately after the final TMCP-rolling operation. Direct quenching is excluded from accelerated cooling.

(c) The material properties conferred by TMCP and AcC cannot be reproduced by subsequent normalizing or other heat treatment.

Where CR (NR) and TMCP with/without AcC are applied, the programmed rolling schedules are to be verified by the Society at the time of the steel works approval, and are to be made available when required by the attending Surveyor. On the manufacturer's responsibility, the programmed rolling schedules are to be adhered to during the rolling operation. Refer to 3.2.1(b) of this Chapter. To this effect, the actual rolling records are to be reviewed by the manufacturer and occasionally by the Surveyor.

When deviation from the programmed rolling schedules or normalizing or quenching and tempering procedures occurs, the manufacturer is to take further measures required in 3.2.1(b) of this Chapter to the Surveyor's satisfaction.

(d) The schematic diagrams of the applicable steel rolling procedures are shown in Fig. XI 3-1 of this Chapter.

3.4.2 Extra high strength steels

(a) Delivery condition

Steel is to be delivered in accordance with the processes approved by the Society. These processes include:

(i) N (Normalized) / NR (Normalized rolled);

(ii) TMCP (Thermo-mechanical controlled rolled) with AcC (Accelerated cooling), or TMCP with DQ (direct quenching followed by tempering), or

(iii) QT (Quenched and Tempered)

Refer to 3.4.1(b) of this Chapter for the definitions of the processes.

Note: Direct quenching after hot-rolling followed by tempering is considered equivalent to conventional quenching and tempering.

(b) Rolling reduction ratio

The rolling reduction ratio of slab, billet, bloom or ingot should not be less than 3:1 unless agreed at the time of approval.

(c) Thickness limits for approval

(i) The maximum thickness of slab, billet or bloom from the continuous casting process is to be at the manufacturer's discretion.

(ii) Maximum thickness of plates, sections, bars and tubulars over which a specific delivery condition is applicable are shown as follows.

Delivery condition	Max. thickness (mm)			
	Plates	Sections	Bars	Tubulars
N	250(2)	50	250	65
NR	150	(1)		
TMCP	150	50	N.A.	N.A.
QT	150(2)	50	N.A.	50

Notes:

(1) The maximum thickness limits of sections, bars and tubulars produced by NR process route are less than those manufactured by N route, and is to be at the discretion of the Society.

(2) Approval for N steels with thickness larger than 250 mm and QT steels with thickness larger than 150 mm is subject to the special consideration of the Society.

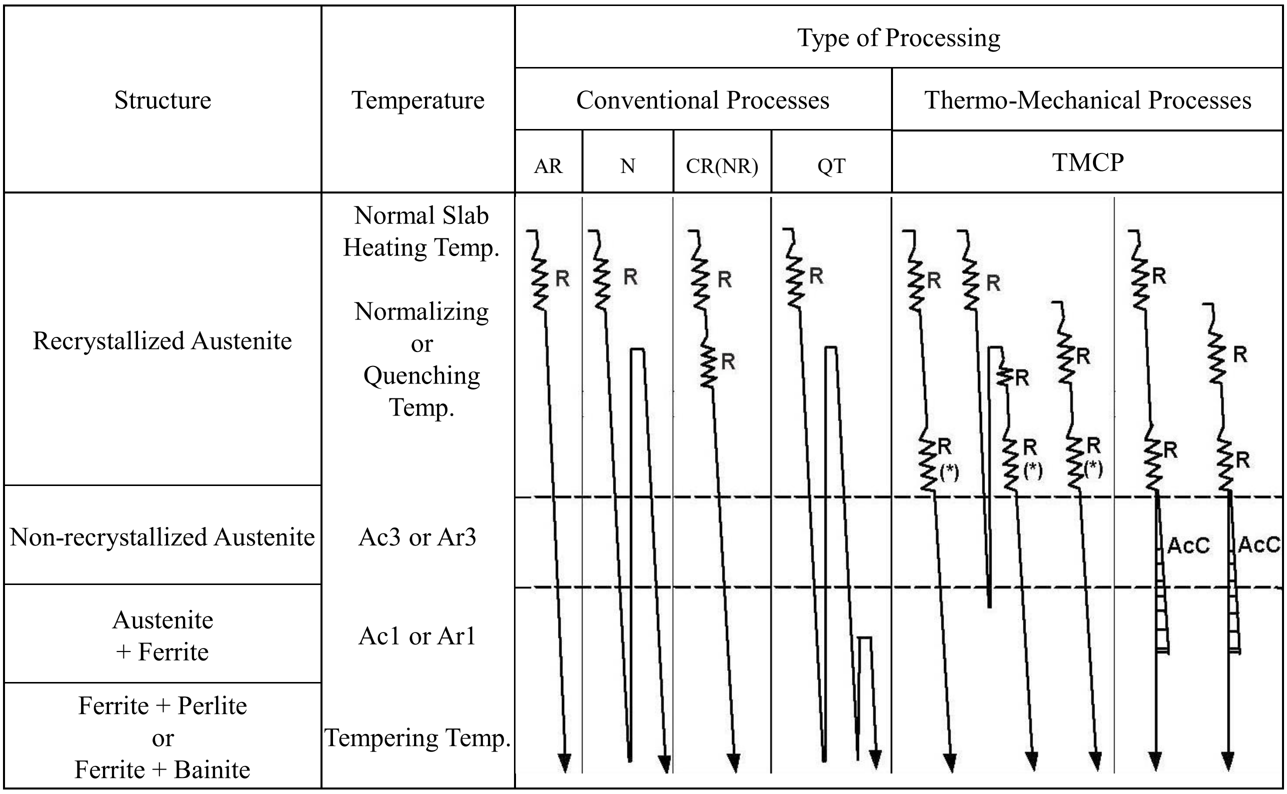

Notes：

AR	:	As Rolled
N	:	Normalizing
CR(NR)	:	Controlled Rolling (Normalizing Rolling)
QT	:	Quenching and Tempering
TMCP	:	Thermo-Mechanical Rolling (Thermo-Mechanical Controlled Process)
R	:	Reduction
(*)	:	Sometimes rolling in the dual-phase temperature region of austenite and ferrite
AcC	:	Accelerated Cooling

Fig. XI 3-1
Schematic Diagrams of Thermo-Mechanical and Conventional Process

Table XI 3-8
Conditions of Supply and Impact Test Requirements for Normal Strength Steels

Grade	Deoxidation Practice	Products	Thickness (mm)	Condition of Supply(1)	Batch for Impact Test (2) (ton)
A	Rimmed	Sections	t ≤ 12.5	Any	Not required
	Any method except rimmed	Sections	t ≤ 50	Any	Not required
		Plates	t ≤ 50	Any	Not required
	Killed		50 < t ≤ 100	N, TMCP	(3)
				CR, AR*	50
B	Any method except rimmed	Sections	t ≤ 25	Any	Not required
			25 <t ≤ 50	Any	50
		Plates	t ≤ 25	Any	Not required
			25 < t ≤ 50	Any	50
	Killed		50 < t ≤ 100	N, TMCP	
				CR, AR*	25
D	Killed	Plates Sections	t ≤ 25	Any	50
	Killed and fine grain treated	Section	t ≤ 35	Any	50
			35 < t ≤ 50	N, CR, TMCP	
				AR*	25
		Plates	t ≤ 35	Any	50
			35 < t ≤ 50	N, CR, TMCP	
			50 < t ≤ 100	N, TMCP	
				CR	25
E	Killed and fine grain treated	Section	t ≤ 50	N, TMCP	25
				AR*, CR*	15
		Plates	t ≤ 100	N, TMCP	Each piece

Notes:

(1) Symbols used in "Condition of supply" are as follows:

Any : Any conditions, including as rolled, controlled rolled, TMCP rolled and any other heat treatments.
N : Normalized condition.
TMCP : Thermo-mechanically controlled processed rolling as approved by the Society.
CR : Controlled rolled condition as an alternative to normalizing.
AR* : As rolled condition subject to the special approval of the Society.
CR* : Controlled rolled condition subject to the special approval of the Society.

(2) One set of 3 impact specimens is to be taken from each batch of the specified mass in tons or fraction thereof.

(3) See note 5 of Table XI 3-9 of this Chapter.

Table XI 3-9
Conditions of Supply & Impact Test Requirements for Higher Strength Steels

Grade	Deoxidation Practice	Grain Refining Elements	Products	Thickness (mm)	Condition of Supply(1)	Batch for Impact Test (ton) (2)
AH32 AH36	Killed and fine grain treated	Nb and/or V	Sections	t ≤ 12.5	Any	50
				12.5 < t ≤ 50	N, CR, TMCP	
					AR*	25
			Plates	t ≤ 12.5	Any	50
				12.5 < t ≤ 50	N, CR, TMCP	
				50 < t ≤ 100	N, TMCP	
					CR	25
		Al alone or with Ti	Sections	t ≤ 20	Any	50
				20 < t ≤ 50	N, CR, TMCP	
					AR*	25
			Plates	t ≤ 20	Any	50
				20 < t ≤ 35	AR*	25
				20 < t ≤ 50	N, CR, TMCP	50
				50 < t ≤ 100	N, TMCP	
					CR	25
AH40	Killed and fine grain treated	Any	Sections	t ≤ 12.5	Any	50
				12.5 < t ≤ 50	N, CR, TMCP	
			Plates	t ≤ 12.5	Any	
				12.5 < t ≤ 50	N, CR, TMCP	
				50 < t ≤ 100	N, TMCP	
					QT	Each length as heat-treated
DH32 DH36	Killed and fine grain treated	Nb and/or V	Sections	t ≤ 12.5	Any	50
				12.5 < t≤ 50	N, CR, TMCP	
					AR*	25
			Plates	t ≤ 12.5	Any	50
				12.5 < t ≤ 50	N, CR, TMCP	
				50 < t ≤ 100	N, TMCP	
					CR	25
		Al alone or with Ti	Sections	t ≤ 20	Any	50
				20 < t ≤ 50	N, CR, TMCP	
					AR*	25
			Plates	t ≤ 20	Any	50
				20 < t ≤ 25	AR*	25
				20 < t ≤ 50	N, CR, TMCP	50
				50 < t ≤ 100	N, TMCP	
					CR	25
DH40	Killed and fine grain treated	Any	Sections	t ≤ 50	N, CR, TMCP	50
			Plates	t ≤ 50	N, CR, TMCP	
				50 < t ≤ 100	N, TMCP	
					QT	Each length as heat-treated

EH32 EH36	Killed and fine grain treated	Any	Sections	t ≤ 50	N, TMCP	25
					AR*, CR*	15
			Plates	t ≤ 100	N, TMCP	Each piece
EH40	Killed and fine grain treated	Any	Sections	t ≤ 50	N, TMCP, QT	25
			Plates	t ≤ 100	N, TMCP	Each piece
					QT	Each length as heat-treated
FH32 FH36	Killed and fine grain treated	Any	Sections	t ≤ 50	N, QT, TMCP	25
					CR*	15
			Plates	t ≤ 100	N, TMCP	Each piece
					QT	Each length as heat-treated
FH40	Killed and fine grain treated	Any	Sections	t ≤ 50	N, TMCP, QT	25
			Plates	t ≤ 100	N, TMCP	Each piece
					QT	Each length as heat-treated
EH47	Killed and fine grain treated	Any	Plates	50 < t ≤ 100	TMCP(3)	Each piece

Notes:

(1) Symbols used in "Condition of supply" are as follows:

Any : Any conditions, including as rolled, controlled rolled, TMCP rolled and any other heat treatments.

N : Normalized condition.

TMCP: Thermo-mechanically controlled processed rolling as approved by the Society.

CR : Controlled rolled condition as an alternative to normalizing.

AR* : As rolled condition subject to the special approval of the Society.

CR* : Controlled rolled condition subject to the special approval of the Society.

QT : Quenched and tempered condition.

(2) One set of 3 impact specimens is to be taken from each batch of the specified mass in tons or fraction thereof. For grades A32 and A36 steels a relaxation in the number of impact tests may be permitted. (See Note (3) of Table XI 3-11 of this Chapter.)

(3) Other conditions of supply are to be specially considered by the Society.

3.5 Mechanical Properties

3.5.1 General requirements

(a) Normal strength and higher strength steels

(i) The mechanical properties for normal strength and higher strength steels are to comply with the requirements given in Table XI 3-10 and Table XI 3-11 of this Chapter.

(ii) Minimum average energy values are specified for Charpy V-notch impact test specimens taken in either the longitudinal or transverse directions (see 3.5.5(b)(i)(2) of this Chapter). Generally only longitudinal test specimens need to be prepared and tested except for special applications where transverse test specimens may be required by the purchaser or the Society. Transverse test results are to be guaranteed by the supplier.

(iii) The tabulated values are for standard specimens 10 mm × 10 mm. For plate thicknesses less than 10 mm, impact test may be waived at the discretion of the Society or subsize specimens, as specified in Chapter 2 of this Part, may be used.

(iv) The average value obtained from one set of three impact tests is to comply with the requirements given in Table XI 3-10 and Table XI 3-11 of this Chapter. One individual value only may be below the specified average value provided it is not less than 70% of that value.

(v) Generally, impact tests are not required when the nominal plate thickness is less than 6 mm.

(vi) For tensile test either the upper yield stress (R_{eH}) or where R_{eH} cannot be determined, the 0.2% proof stress (R_p 0.2) is to be determined and the material is considered to comply with the requirements if either value meets or exceeds the specified minimum value for yield strength (R_e).

(b) Extra high strength steels

(i) The mechanical properties for extra high strength steels are to comply with the requirememts given in Table XI 3-12 of this Chapter. In the case of product forms other than plates and wide flats where longitudinal tests are agreed, the elongation values are to be 2 percentage units above those transverse requirements as listed in Table XI 3-12 of this Chapter.

(ii) Through thickness tensile test

(1) For steels designated with improved through thickness properties, through thickness tensile tests are to be performed in accordance with 3.8 of this Chapter.

(2) Subject to the discretion of Society, through thickness tensile strength may be required to be not less than 80% of the specified minimum tensile strength.

(iii) Impact test for a nominal thickness less than 6 mm are normally not required.

Table XI 3-10
Mechanical Properties Requirements for Normal Strength Steels

Material Grade	Tensile Test			Impact Test			
	Min. Yield Stress R_{eH} (N/mm^2)	Tensile Strength R_m (N/mm^2)	Min. Elongation on $L=5.65\sqrt{A}$ (%)	Test Temp. (°C)	Minimum Average Impact Energy(3) (J) Long. (trans.), t = thickness in mm		
					t ≤ 50	50 < t ≤ 70	70 < t ≤ 100
A	235	400~520(1)	22(2)	+20	–	34(5) (24)(5)	41(5) (27) (5)
B				0	27(4) (20(4))	34 (24)	41 (27)
D				–20	27 (20)		
E				–40			

Notes:

(1) For all thicknesses of Grade A steel sections, the upper limit for the specified tensile strength range may be exceeded at the discretion of the Society.

(2) For full thickness flat tensile test specimens with a width of 25 mm and a gauge length of 200 mm, the elongation is to comply with the following minimum values (%):

Thickness(mm) / Material Grade	≤ 5	> 5 ≤ 10	> 10 ≤ 15	> 15 ≤ 20	> 20 ≤ 25	> 25 ≤ 30	> 30 ≤ 40	> 40 ≤ 50
A, B, D, E	14	16	17	18	19	20	21	22

(3) See 3.5.1(a)(ii) & (iii) of this Chapter.

(4) Charpy V-notch impact tests are generally not required for Grade B steel with thickness of 25 mm or less.

(5) Impact tests for Grade A steel over 50 mm in thickness are not required when the material is produced using fine grain practice and furnished normalizing. TMCP rolling may be accepted without impact testing at the discretion of the Society.

Table XI 3-11
Mechanical Properties Requirements for Higher Strength Steels

Material Grade	Tensile Test			Impact Test			
	Min. Yield Stress R_{eH} (N/mm^2)	Tensile Strength R_m (N/mm^2)	Min. Elongation on L = $5.65\sqrt{A}$ (%)	Test Temp. (°C)	Minimum Average Impact Energy(2) (J) Long. (trans.), t = thickness in mm		
					t ≤ 50	50 < t ≤ 70	70 < t ≤ 100
AH32	315	440~570	22(1)	0	31(3) (22(3))	38 (26)	46 (31)
DH32				–20	31 (22)		
EH32				–40			
FH32				–60			
AH36	355	490~630	21(1)	0	34(3) (24(3))	41 (27)	50 (34)
DH36				–20	34 (24)		
EH36				–40			
FH36				–60			
AH40	390	510~660	20(1)	0	39 (26)	46 (31)	55 (37)
DH40				–20			
EH40				–40			
FH40				–60			
EH47	460	570~720	17	–40	Not applicable	(4)	

Notes:

(1) For full thickness flat tensile test specimens with a width of 25 mm and a gauge length of 200 mm, the elongation is to comply with the following minimum values (%):

Thickness(mm) / Material Grade	≤ 5	> 5 ≤ 10	> 10 ≤ 15	> 15 ≤ 20	> 20 ≤ 25	> 25 ≤ 30	> 30 ≤ 40	> 40 ≤ 50
H32	14	16	17	18	19	20	21	22
H36	13	15	16	17	18	19	20	21
H40	12	14	15	16	17	18	19	20

(2) See 3.5.1(a)(ii) & (iii).

(3) For Grades AH32 and AH36 steels, a relaxation in the number of impact tests for acceptance purposes may be permitted by special agreement with the Society provided that satisfactory results obtained from occasional check tests.

(4) Minimum average impact energy (J) for specimen taken in longitudinal direction is to be in accordance with the following:

Thickness	50 < t ≤ 70	70 < t ≤ 85	85 < t ≤ 100
Minimum average impact energy (J)	53	64	75

Note: Minimum average impact energy for specimen taken in transverse direction is to be at the discretion of the Society.

Table XI 3-12
Mechanical Properties Requirements for Extra High Strength Steels

Material Grade		Tensile Test						Impact Test	
		Min. Yield Stress R_{eH}(1) (N/mm²) Nominal thickness(4) in mm			Tensile Strength R_m (N/mm²) Nominal thickness(4) in mm		Min. Elongation on $L=5.65\sqrt{A}$ Lon.(tran.)(2)(3) (%)	Test Temp. (°C)	Min. Average Impact Energy Lon.(tran.) (J)
		$3 \le t \le 50$	$50 \le t \le 100$	$100 \le t \le 250$	$3 \le t < 100$	$100 \le t \le 250$			
420N/NR 420TMCP 420QT	A	420	390	365	520~680	470~650	21 (19)	0	42 (28)
	D							-20	
	E							-40	
	F							-60	
460N/NR 460TMCP 460QT	A	460	430	390	540~720	500~710	19 (17)	0	46 (31)
	D							-20	
	E							-40	
	F							-60	
500TMCP 500QT	A	500	480	440	590~770	540~720	19 (17)	0	50 (33)
	D							-20	
	E							-40	
	F							-60	
550TM 550QT	A	550	530	490	640~820	590~770	18 (16)	0	55 (37)
	D							-20	
	E							-40	
	F							-60	
620TM 620QT	A	620	580	560	700~890	650~830	17 (15)	0	62 (41)
	D							-20	
	E							-40	
	F							-60	
690TM 690QT	A	690	650	630	770~940	710~900	16 (14)	0	69 (46)
	D							-20	
	E							-40	
	F							-60	
890TM 890QT	A	890	830	Not applicable	940~1100	Not applicable	13 (11)	0	69 (46)
	D							-20	
	E							-40	
960QT	A	960	Not applicable	Not applicable	980~1150	Not applicable	12 (10)	0	69 (46)
	D							-20	
	E							-40	

Notes:

(1) For tensile test either the upper yield stress (R_{eH}) or where R_{eH} cannot be determined, the 0.2% proof stress (R_p 0.2) is to be determined and the material is considered to comply with the requirements if either value meets or exceeds the specified minimum value for yield strength (R_e).

(2) For full thickness flat test specimens with a width of 25 mm and a gauge length of 200 mm the elongation is to comply with the minimum values shown as follows:

Thickness(mm) / Material Grade	≤ 5	> 5 ≤ 10	> 10 ≤ 15	> 15 ≤ 20	> 20 ≤ 25	> 25 ≤ 30	> 30 ≤ 40	> 40 ≤ 50	> 50 ≤ 70
A / D / E /F 420	11		13	14	15	16	16	17	18
A / D / E /F 460	11		12	13	14	15	15	16	17
A / D / E /F 500	10		11	12	13	14	14	15	16
A / D / E /F 550	10								
A / D / E /F 620	9		11	12	12	13	13	14	15
A / D / E /F 690	9**		10**	11**	11	12	12	13	14

* The tabulated elongation minimum values are the requirements for testing specimen in transverse direction. 890 and 960 specimens and specimens which are not included in this table are to be proportional specimens with a gauge length of $L = 5.65\sqrt{A}$

** For 690 plates with thickness ≤ 20 mm, round specimen in accordance with Chapter 2 of this Part may be used instead of the flat tensile specimen. The minimum elongation for testing specimen in transverse direction is 14%.

(3) In the case that the tensile specimen is parallel to the final rolling direction, the test result shall comply with the requirement of elongation for longitudinal (L) direction.

(4) For plates and sections for applications, such as racks in offshore platforms etc., where the design requires that tensile properties are maintained through the thickness, a decrease in the minimum specified tensile properties is not permitted with an increase in the thickness.

3.5.2 Test and retest procedures

(a) Test procedures

Test procedures which are to be in accordance with Chapter 2 of this Part are to apply to normal strength, higher strength and extra high strength steels.

(b) Retest procedures for normal and higher strength steels

(i) When the tensile test from the first piece selected in accordance with 3.5.3(a)(i) of this Chapter fails to meet the requirements, the retest requirements for tensile tests are to be in accordance with 1.5 of this Part.

(ii) If one or both of the additional tests referred to above are unsatisfactory, the piece is to be rejected, but the remaining material from the same batch may be accepted provided that 2 of the remaining pieces in the batch selected in the same way, are tested with satisfactory results. If unsatisfactory results are obtained from either of these two pieces then the batch of material is to be rejected.

(iii) Retest requirements for Charpy impact tests are to be in accordance with 1.5 of this Part.

(iv) When the initial piece, representing a batch, gives unsatisfactory results from the additional Charpy V-notch impact tests referred to above, this piece is to be rejected but the remaining material in the batch may be accepted provided that 2 of the remaining pieces in the batch are tested with satisfactory results. If unsatisfactory results are obtained from either of these 2 pieces then the batch of material is to be rejected. The pieces selected for these additional tests are to be the thickest remaining in the batch.

(v) If any test specimen fails because of faulty preparation, visible defects or (in the case of tensile test) because of fracturing outside the range permitted for the appropriate gaugelength, the defective test piece may, at the Surveyors discretion, be disregarded and replayed by an additional test piece of the same type.

(vi) At the option of the steelmaker, when a batch of material is rejected, the remaining pieces in the batch may be resubmitted individually for test and those pieces which give satisfactory results may be accepted.

(vii) At the option of the steelmaker, rejected material may be resubmitted after heat treatment or reheat treatment, or may be resubmitted as another grade of steel and may then be accepted provided the required tests are satisfactory.

(viii) In the event of any material proving unsatisfactory during subsequent working or fabrication, such material may be rejected, notwithstanding any previous satisfactory testing and/or certification.

(c) Retest procedures for extra high strength steels

Retest procedures for tensile tests and Charpy impact tests are to be in accordance with 1.5 of this Part.

3.5.3 Test frequency

(a) Normal strength and higher strength steels

(i) Tensile test

For each batch presented, except where specially agreed by the Society, one tensile test is to be made from one piece unless the weight of finished material is greater than 50 tonnes, in which case one test is to be made from a different piece from each 50 tonnes or fraction thereof. Additionally tests are to be made for every variation of 10 mm in the thickness or diameter of products from the same cast.

(ii) Impact test

(1) Steels other than Grades E, EH32, EH36, EH40, FH32, FH36 and FH40
Steels other than Grades E, EH32, EH36, EH40, FH32, FH36 and FH40 are to be in accordance with Table XI 3-8 and Table XI 3-9 of this Chapter.

a) Except where otherwise specified or specially agreed by the Society, for each batch presented, at least one set of three Charpy V-notch test specimens is to be made from one piece unless the weight of finished material is greater than 50 tonnes, in which case one

extra set of three test specimens is to be made from a different piece from each 50 tonnes or fraction thereof. When steel plates except for Grade A steel over 50 mm in thickness is supplied in the controlled rolled condition, the frequency of impact test is to be made from a different piece from each 25 tonnes or fraction thereof.

b) For steel plates of Grades AH40 and DH40 with thickness over 50 mm in normalized or TMCP condition, one set of impact test specimens is to be taken from each batch of 50 tonnes or fraction thereof. For those in QT condition, one set of impact test specimens is to be taken from each length as heat treated.

c) When, subject to the special approval of the Society, material is supplied in the as rolled condition, the frequency of impact tests is to be increased to one set from each batch of 25 tonnes or fraction thereof. Similarly Grade A steel over 50 mm in thickness may be supplied in the as rolled condition. In such case one set of three Charpy V-notch test specimens is to be taken from each batch of 50 tonnes or fraction thereof.

d) The piece selected for the preparation of the test specimens is to be the thickest in each batch.

(2) Steels of grades E, EH32, EH36, EH40, FH32, FH36 and FH40

a) For steel plates supplied in the normalised or TMCP condition one set of impact test specimens is to be taken from each piece. For quenched and tempered steel plates one set of impact test specimens is to be taken from each length as heat treated.

b) For sections one set of impact tests is to be taken from each batch of 25 tonnes or fraction thereof.

c) When, subject to the special approval of the Society, sections other than Grades EH40 and FH40 are supplied in the as rolled or controlled rolled condition, one set of impact tests is to be taken from each batch of 15 tonnes or fraction thereof.

d) For b) and c) above the piece selected for the preparation of the test specimens is to be the thickest in each batch.

(b) Extra high strength steels

(i) Tensile test

Tensile test sample is to be randomly selected from each batch, as defined in 1.1.5 of this Part, that is to be less than or equal to 25 tonnes, and to be from the same cast, in the same delivery condition and of the same thickness.

(ii) Impact test

(1) For steels plates in N/NR or TMCP condition test sample is to be taken from each piece.

(2) For steels in QT condition test sample is to be taken from each individually heat treated part thereof.

(3) For sections, bars and tubulars, test sample is to be taken from each batch of 25 tonnes or fraction thereof.

Note 1: If the mass of the finished material is greater than 25 tonnes, one set of tests from each 25 tonnes and/or fraction thereof is required. (e.g. for consignment of 60 tonnes would require 3 plates to be tested).

Note 2: For continuous heat treated product special consideration may be given to the number and location of test specimens required by the manufacturer to be agreed by the Society.

3.5.4 Test samples

(a) All material in a batch presented for acceptance tests is to be of the same product form e.g. plates, flats, sections, etc. from the same cast and in the same condition of supply.

(b) The test samples are to be fully representative of the material and, where appropriate, are not to be cut from the material until heat treatment has been completed.

(c) The test specimens are not to be separately heat treated in any way.

(d) The test samples, unless otherwise agreed, are to be taken from the following positions:

(i) Plates and wide flats with a width of 600 mm and over

For plates and wide flats with a width of 600 mm and over, the test samples are to be taken from one end at a position approximately midway between the axis in the direction of rolling and the edge of the rolled product as shown in Fig. XI 3-2(a) of this Chapter. Unless otherwise agreed the tensile test specimens are to be prepared with their longitudinal axes transverse to the final direction of rolling.

(ii) For flats with a width less than 600 mm and other sections

For flats with a width less than 600 mm and other sections, the test samples are to be taken from one end at a position approximately 1/3 (1/6 for H-sections) from the outer edge or in the case of small sections, as near as possible to this position, See Fig. XI 3-2 (b), (c), (d), (e) of this Chapter. In the case of unequal channels, and H-beams, the test samples may alternatively be taken from a position approximately 1/4 of the depth from the web center line or axis. See Fig. XI 3-2, (c), and (e) of this Chapter. The tensile test specimens may be prepared with their longitudinal axes either parallel or transverse to the final direction of rolling.

(iii) For bars and other similar products

For bars and other similar products, the test samples are to be taken so that the longitudinal axes of the test specimens are parallel to the direction of rolling and are as near as possible to the following:

(1) For cylindrical sections, at 1/3 of the radius from the outside surface as shown in Fig. XI 3-2(f) of this Chapter.

(2) For non-cylindrical sections, at 1/3 of the half diagonal from the outside surface.

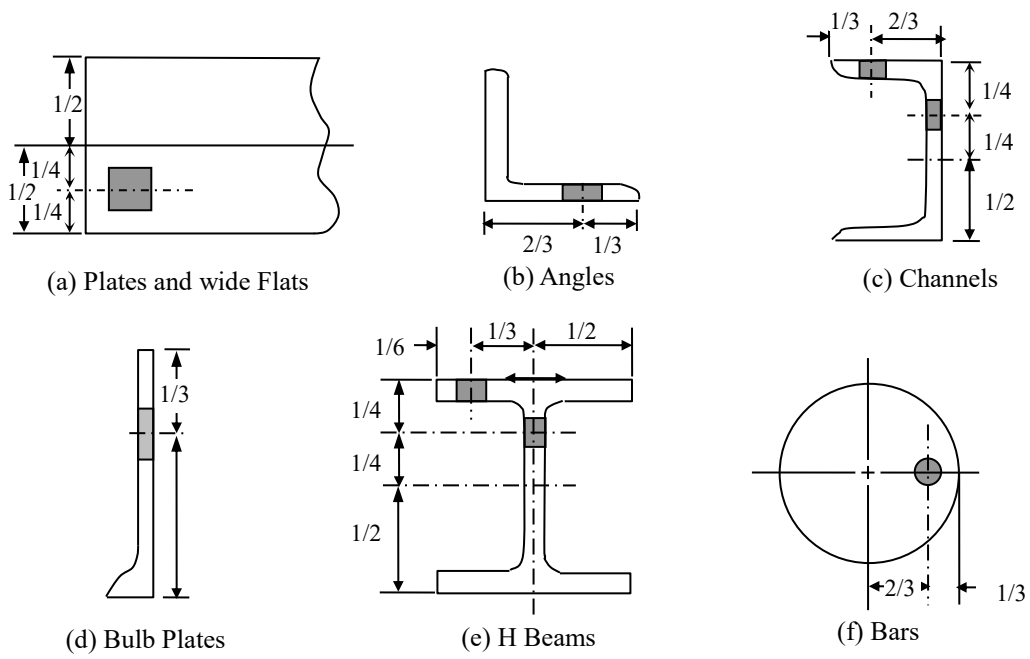

Fig. XI 3-2
Test Samples

3.5.5 Test specimens

The following requirements are to apply to normal strength, higher strength and extra high strength steels.

(a) Tensile test specimens

(i) Normal strength and higher strength steels

(1) The tensile test specimens are to be of Type T1, T2 and T3 as specified in Table XI 2-1 of this Part.

(2) Generally for plates, wide flats and sections, the tensile test specimens of full product thickness are to be used. Round test specimens may be used when the product thickness exceeds 40 mm or for bars and other similar products. Alternatively for small size of bars, etc., test specimens may consist of a suitable length of the full cross-section of the product.

(ii) Extra high strength steels

Test specimens for mechanical properties are in accordance with Chapter 2 and 3.5.5(a) above.

(1) Test specimens are to be cut with their longitudinal axes transverse to the final direction of rolling, except in the case of sections, bars, tubulars and rolled flats with a finished width of 600 mm or less, where the tensile specimens may be taken in the longitudinal direction.

(2) Full thickness flat tensile specimens are to be prepared. The specimens are to be prepared in such a manner as to maintain the rolling scale at least at one side. When the capacity of the test machine is exceeded by the use of a full thickness specimen, sub-sized flat tensile specimens representing either the full thickness or half of the product thickness retaining one rolled surface are to be used. Alternatively, machined round test specimens may be used. The specimens are to be located at a position lying at a distance of t/4 from the surface and additionally at t/2 for thickness above 100 mm or as near as possible to these positions.

(b) Impact test specimens

(i) Normal strength and higher strength steels

(1) One impact test is to be made for each batch in the frequency as given in Table XI 3-8 and Table XI 3-9 of this Chapter. One set of 3 test specimens is to be taken from the thickest product in each batch.

(2) The impact test specimens are to be of the Charpy V-notch type (Type N1 as specified in Table XI 2-3 of this Part) cut with their edge within 2 mm from the "as rolled" surface with their longitudinal axes either parallel or transverse to the final direction of rolling of the material. The notch is to be cut in a face of the test specimen which was originally perpendicular to the rolled surface. The position of the notch is not to be nearer than 25 mm to a flame cut or sheared edge (see 3.5.1(a)(ii) of this Chapter). Where the product thickness exceeds 40 mm, the impact test specimens are to be taken with their longitudinal axis at a quarter thickness position.

(ii) Extra high strength steels

Test specimens for mechanical properties are in accordance with Chapter 2 and 3.5.5(b)(i) of this Chapter.

(1) The Charpy V-notch impact test specimens for plates and wide flats over 600 mm in width are to be taken with their axes transverse to the final rolling direction and the results should comply with the appropriate requirements for transverse direction of Table XI 3-12 of this Chapter. For other product forms, the impact tests are to be in the longitudinal direction, the results of the tests are to comply with the appropriate requirements for longitudinal direction of Table XI 3-12 of this Chapter.

(2) Sub-surface test specimens will be taken in such a way that one side is not further away than 2 mm from a rolled surface, however, for material with a thickness in excess of 50 mm, impact tests are to be taken at the quarter thickness (t/4) location and mid-thickness (t/2).

3.6 Quality Inspections

3.6.1 All products are to have a workman-like finish and to be free from defects and imperfections which may impair their proper workability and use. This may, however, include some discontinuities of a harmless nature, minor imperfections, e.g. pittings, rolled-in scale, indentations, roll marks, scratches, and grooves which cannot be avoided completely despite proper manufacturing and which will not be objected to provided they do not exceed the acceptable limits contained herein.

3.6.2 Notwithstanding this, the products may have imperfections exceeding the discontinuities inherent to the manufacturing process as defined in 3.6.1 above. In such cases, limits for their acceptability are to be agreed with the Society, taking the end use of product into consideration.

3.6.3 Cracks, shells, sand patches and sharp edged seams are always considered defects which would impair the end use of the product and which require rejection or repair irrespective of their size and number. The same applies to other imperfections exceeding the acceptable limits.

3.6.4 The responsibility for the required surface finish rests with the manufacturer of the material, who is to take necessary precautions and to inspect the products prior to delivery. At that stage, however, rolling or heat treatment scale may conceal surface discontinuities. If, during the subsequent descaling or working operations, the material is found to be defective, the Surveyor may require materials to be repaired or rejected.

3.6.5 If the product is ordered with non-destructive examinations, these are to be made in accordance with an acceptable standard at the discretion of the Society.

3.6.6 Surface inspection and verification of dimensions are the responsibility of the steel manufacturer. The acceptance by the Surveyor of the Society is not to absolve the steel manufacturer from this responsibility.

3.6.7 Dimensional tolerances

(a) The maximum permissible under thickness tolerance for hull construction rolled steel plates and wide flats is −0.3 mm irrespective of nominal thickness.

(b) For rolled steel plates and wide flats intended for machinery structures, the under thickness tolerance may relax to as follows:

Nominal thickness t (mm)	Minus tolerance on nominal thickness (mm)
$3 \le t < 5$	0.3
$5 \le t < 8$	0.4
$8 \le t < 15$	0.5
$15 \le t < 25$	0.6
$25 \le t < 40$	0.7
$40 \le t < 80$	0.9
$80 \le t < 150$	1.1
$150 \le t < 250$	1.2
$250 \le t$	1.3

(c) Tolerances for length, width, flatness and over thickness of plates and wide flats and those for other products are to comply with the requirements of the recognized national or international standards.

(d) The attention of Shipbuilders and Ship owners is to be drawn to the fact that when thickness gauging is carried out during the ship's life, estimation of the diminution of hull plating and structure is to be based on the nominal thickness, this being the original approved thickness for the item of structure under consideration.

(e) The thickness is to be measured at random locations whose distance from a longitudinal edge is to be at least 10 mm. Local surface depression resulting from imperfections and ground areas resulting from the elimination of defects may be disregarded provided the imperfections or grinding are in accordance with the requirements of the recognized national or international standards.

(f) The average thickness defined as the arithmetic mean of the measurements is not to be less than the nominal thickness.

3.7 Repair of Defects

3.7.1 The unacceptable imperfections or defects are to be completely removed by grinding.

(a) The ground depth is not to be more than 7% of the nominal thickness or 3 mm, whichever is the less.

(b) Each single ground area is not to exceed 0.25 m^2 and all ground areas are not to exceed 2% of the total surface in question. Ground areas lying in a distance less than their average breadth to each other are to be regarded as one single area.

(c) The ground areas must have smooth transitions to the sounding surface of the products. Ground areas lying opposite each other on both surfaces must not decrease the product thickness by value exceeding the limits as stated in 3.7.1(a) above.

3.7.2 Local defects which cannot be repaired grinding, may be repaired with the Surveyor's consent by chipping and/or grinding followed by welding subject to the following conditions:

(a) The depth of removed area is not to be more than 20% of the nominal thickness.

(b) Any single welded area is not to exceed 0.125 m^2 and the sum of all areas is not to exceed 2% of the total surface side in question.

(c) The distance between 2 welded areas is not to be less than their average breadth.

(d) Welding is to be carried out by an approved procedure and by qualified welder using approved welding materials and the welded areas are to be ground smoothly to the correct nominal thickness.

(e) Generally a suitable post-weld heat treatment is required, unless otherwise specially approved by the Society or in case of the welding repair has been performed prior to heat treatment for the steels to be supplied in heat treated condition.

3.7.3 Complete repair of the defects may be verified by suitable non-destructive examinations at Surveyor's discretion.

3.7.4 The steel manufacturer is to submit a written repair report concerning the details of defects, repair procedures and results for Surveyor's approval.

3.8 Additional Requirements for Through Thickness Properties ("Z" quality)

3.8.1 General

(a) This section gives the requirements for special quality "Z" grade steel products with improved ductility in the through thickness or Z-direction relating to the structural design, in order to minimize the possibility of lamellar tearing either during fabrication or erection.

(b) The "Z" grade steel products apply to rolled steel plates and wide flats with a thickness of 15 mm and over, and are to comply with the applicable requirements for the construction of hull in this chapter, and the additional requirements given herein. Steel products with a thickness less than 15 mm may be included at the discretion of the Society.

(c) The "Z" grade steel products are subdivided into Grade Z25 and Grade Z35 in accordance with the reduction of area of tensile specimens in the through-thickness direction. For normal ship applications the Z25 grade is applicable, whilst the Z35 grade is for more severe applications.

(d) The requirements of this section may be applicable to the other steels than the material specified in 3.8.1 above, where deemed appropriate by the Society.

3.8.2 Manufacture

(a) All plates and wide flats are to be manufactured at works which have been approved by the Society for this "Z" quality of material.

(b) The approval should follow the procedure given in IACS UR W11 Appendix A, but take into account the improved steelmaking techniques of calcium treatment, vacuum degassing and argon stirring as well as the control of centre-line segregation during continuous casting.

(c) In addition to the requirements of the appropriate steel specification for chemical composition in this chapter, the maximum sulphur content is to be 0.008% determined by the ladle analysis.

3.8.3 Test specimens for through thickness tensile test

(a) For plates, a test sample in a size sufficient for 6 test specimens is to be taken from the center of one end of each piece, or one representative piece of each batch, see Table XI 3-13 of this Chapter for selection of “piece or batch”. Where plates having a weight exceeding 20 ton, another 6 specimens are to be prepared from the opposite end for the same testing. Where appropriate, the end selected is to be representative of the top end of an ingot or the start of a continuous cast strand. 3 tensile test specimens are to be prepared from each of these test samples in a line transverse to the final direction of rolling as shown in Fig. XI 3-3 of this Chapter. Generally, the other 3 test specimens are prepared for possible retests.

Table XI 3-13
Piece or Batch Size Dependent on Product and Sulphur Content

Product	S > 0.005%	S ≤ 0.005%
Plates	Each piece	Each batch of maximum 50 ton of products
Wide flats of nominal thickness ≤ 25 mm	Each batch of maximum 10 ton of products	Each batch of maximum 50 ton of products
Wide flats of nominal thickness > 25 mm	Each batch of maximum 20 ton of products	Each batch of maximum 50 ton of products

Note:Each batch of steel products is to be of similar thickness (thicknesses do not differ by more than 5 mm), originating from the same heat treatment charge and the same heat of steel.

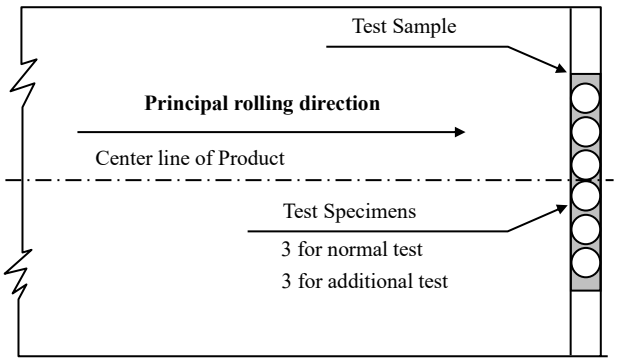

Fig. XI 3-3
Test Sample for Through Thickness Tensile Test

(b) For wide flats, a similar test sample is to be taken from each batch of products derived from a single cast and in the same heat treatment condition. A batch is not to exceed 10 tons for thickness up to 25 mm and not to exceed 20 tons for thickness exceeds 25 mm, see Table XI 3-13.

(c) The test specimens are to be machined in accordance with a recognized standard to the dimensions as shown in Table XI 3-14 of this Chapter. Where the product thickness is not allow to prepare specimens of sufficient length suitable for the gripping jaws of the testing machine, the ends of the test specimens may be built up by suitable welding methods. The welding is not to impair the portion of the specimen within the parallel length.

Table XI 3-14
Through Thickness Tensile Test Specimens

Product Thickness t (mm)	Test Specimen Diameter d (mm)	Test Specimen Parallel Length L (mm)
15 ≤ t ≤ 25	6	t ≥ L ≥ 2.0d
25 < t	10	

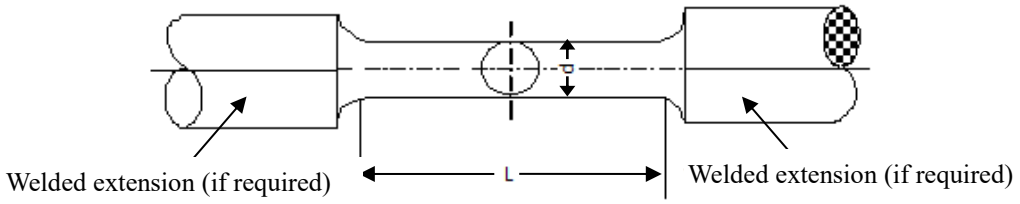

3.8.4 Test results for through thickness tensile test

(a) The 3 through thickness tensile test specimens are to be tested at ambient temperature.

(b) The test is considered invalid and further replacement test is required if the fracture occurs in the weld or heat affected zone.

(c) The 3 through thickness tensile test specimens, for acceptance, are to give a minimum average reduction of area value of not less than that shown in Table XI 3-15 of this Chapter. Only one individual value may be below the minimum average but not less than minimum individual value shown for the appropriate grade. See Fig. XI 3-4 of this Chapter.

Table XI 3-15
Reduction of Area Acceptance Values

Grade	Z25	Z35
Minimum average	25%	35%
Minimum individual	15%	25%

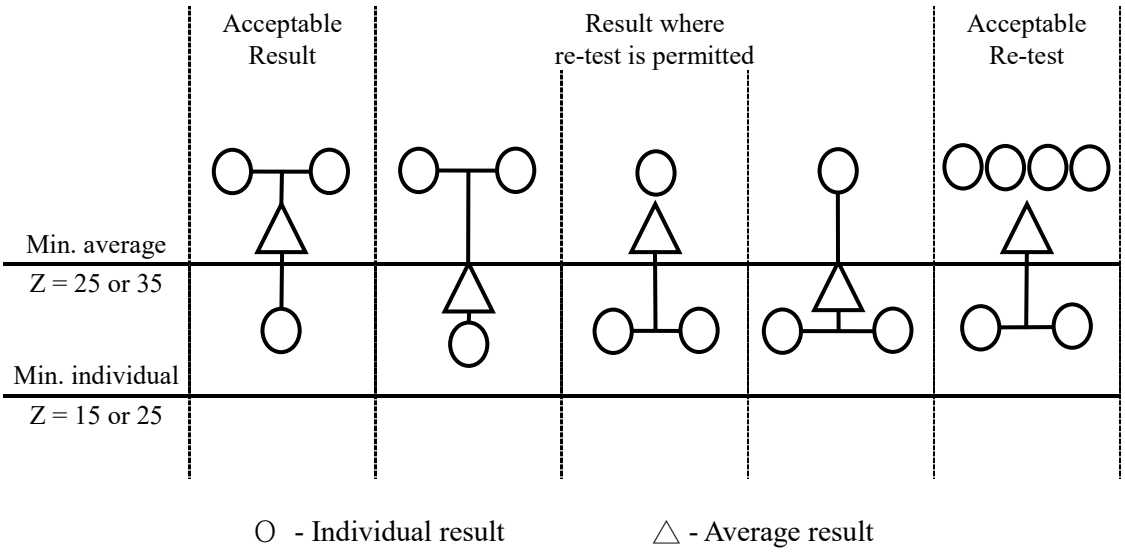

Fig. XI 3-4
Diagram Showing Acceptance/Rejection and Retest Criteria

3.8.5 Retest for through thickness tensile test

(a) Fig. XI 3-4 of this Chapter shows the 3 cases where a retest situation is permitted. In these instances 3 more tensile tests are to be taken from the remaining test sample. The average of all 6 tensile tests is to be greater than the required minimum average with no greater than 2 results below the minimum average.

(b) In the case of failure after retest, either the batch represented by the piece is rejected or each piece within the batch is required to be tested.

3.8.6 All “Z” grade steel products are to be ultrasonically tested in the final supply condition with a probe frequency of 3-5 MHz. The testing is to be performed in accordance with recognized standards.

3.9 Identification and Marking

3.9.1 Every finished piece of the rolled steels is to be clearly marked by the steel manufacturer at least in one place with the markings in compliance with the requirements given in 1.7 of this Part.

3.9.2 Steels which have been specially approved by the Society and which differ from the requirements of this chapter are to be affixed with a letter "S" to the material grade designation, e.g. EH36S.

3.9.3 When required by the Society, material supplied in the TMCP condition is to be affixed with the marks "–TM" to the material grade designation, e.g. EH36-TM.

3.9.4 The rolled steels complying with the requirements of through thickness properties given in 3.8 of this Part are to be affixed with the notation “Z25” or “Z35” to the material grade designation, e.g. “EH36Z25”.

3.10 Requirements for Use of Extremely Thick Steel Plates

3.10.1 Application

These requirements are to be applied to ships contracted for construction on or after 1 January 2014.

(a) General

(i) This requirement is to be complied with for container carriers incorporating extremely thick steel plates in accordance with 3.10.1(b) and 3.10.1(c) of this Chapter.

(ii) This section gives measures for identification and prevention of brittle fractures of container carriers to which extremely thick steel plates are applied for longitudinal structural members.

(iii) The application of the measures specified in 3.10.2, 3.10.3 and 3.10.4 of this Chapter is to be in accordance with 3.10.5.

(iv) Brittle fracture toughness of welded joints is to comply with IACS UR W11, UR W28 and UR W31 (Application of YP47 steel plates) where applicable in addition to this requirements.

(v) This section gives the basic concepts for application of extremely thick steel plates to longitudinal structural members in the upper deck region.

(vi) For the application of this section, the upper deck region means the upper deck plating, hatch side coaming plating, hatch coaming top plating and their attached longitudinals.

(b) Steel grade

(i) This requirement is to be applied to container carriers to which any of YP36, YP40 and YP47 steel plates having the thickness specified in 3.10.1(c) of this Chapter for the longitudinal structure members.

Note: YP36 YP40 and YP47 means the steel plates having the minimum specified yield points of 355, 390 and 460 N/mm^2, respectively.

(ii) In case YP47 steel plates are used for longitudinal structural members in the upper deck region, the steel plates are to be of EH47 grade as specified in this chapter.

(c) Thickness

(i) For steel plates with thickness of over 50 mm and not greater than 100 mm, the measures for prevention of brittle crack initiation and propagation specified in this requirement are to be taken.

(ii) For steel plates with thickness exceeding 100 mm, appropriate measures for prevention of brittle crack initiation and propagation are to be taken in accordance with the decision of the Society considering this requirement.

3.10.2 Non-destructive testing (NDT) during construction (Measure No.1 of 3.10.5 of this Chapter)

Where NDT during construction is required in 3.10.5 of this Chapter, the NDT is to be in accordance with 3.10.2(a) and 3.10.2(b) of this Chapter. Enhanced NDT as specified in 3.10.4(c)(v) of this Chapter is to be carried out in accordance with the appropriate standard.

(a) General

Ultrasonic testing (UT) in accordance with IACS UR W33 is to be carried out on all block-to-block butt joints of all upper flange longitudinal structural members in the cargo hold region. Upper flange longitudinal structural members include the topmost strakes of the inner hull/bulkhead, the sheer strake, main deck, coaming plate, coaming top plate, and all attached longitudinal stiffeners. These members are defined in Fig. XI 3-5 of this Chapter.

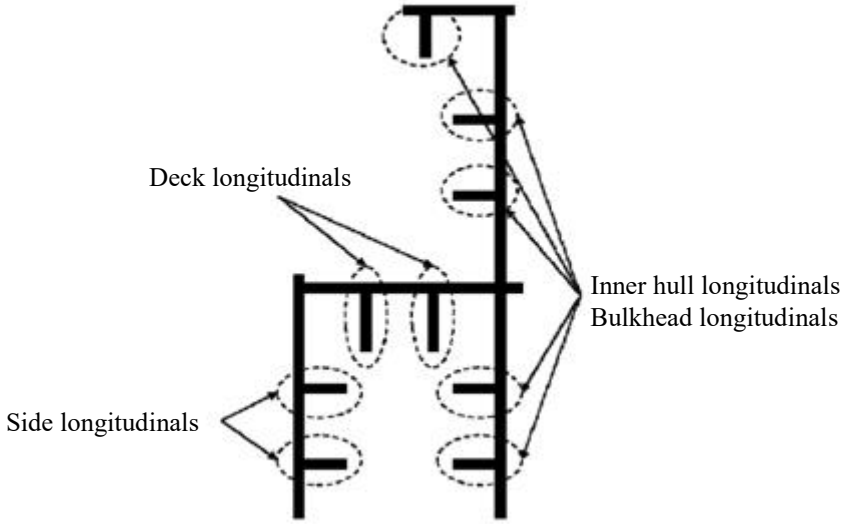

Fig. XI 3-5
Upper Flange Longitudinal Structural Members

(b) Acceptance criteria of UT

(i) Acceptance criteria of UT are to be in accordance with IACS UR W33 practice.

(ii) The acceptance criteria may be adjusted under consideration of the appertaining brittle crack initiation prevention procedure and where this is more severe than that found in IACS UR W33, the UT procedure is to be amended accordingly to a more severe sensitivity.

3.10.3 Periodic NDT after delivery (Measure No.2 of 3.10.5 of this Chapter)

Where periodic NDT after delivery is required, the NDT is to be in accordance with 3.10.3(a), 3.10.3(b) and 3.10.3(c) of this Chapter.

(a) General

The procedure of the NDT is to be in accordance with IACS UR W33 requirements.

(b) Timing of UT

Where UT is carried out, the frequency of survey is to be in accordance with the requirements of the Society.

(c) Acceptance criteria of UT

Where UT is carried out, acceptance criteria of UT are to be in accordance with IACS UR W33 practice.

3.10.4 Brittle crack arrest design (Measure No.3, 4 and 5 of 3.10.5 of this Chapter)

(a) General

(i) The brittle crack arrest steel method detailed herein may be used when the measures No.3, 4 and 5 shown in the Table XI 3-15 of this Chapter are applied and the steel grade material of the upper deck is not higher than YP40. Otherwise other means for preventing the crack initiation and propagation shall be agreed with the Society.

(ii) Measures for prevention of brittle crack propagation, are to be taken within the cargo hold region. A brittle crack arrest design means a design using these measures.

(iii) The measures given in 3.10.4 generally apply to the block-to-block joints but it should be noted that cracks can initiate and propagate away from such joints. Therefore, appropriate measures should also be considered in accordance with 3.10.4(b)(ii)(2) of this Chapter.

(iv) Brittle crack arrest steel is defined in 3.1 to 3.3 of this chapter as steel plate with measured crack arrest properties, K_{ca} at -10°C ≥ 6,000 N/mm$^{3/2}$ or other methods based on the determination of Crack Arrest Temperature (CAT).

(b) Functional requirements of brittle crack arrest design

The purpose of the brittle crack arrest design is to arrest propagation of a crack at a proper position and to prevent large scale fracture of the hull girder.

(i) The locations of most concern for brittle crack initiation and propagation are the block-to-block butt weld joints either on hatch side coaming or on upper deck plating. Other locations in block fabrication where joints are aligned may also present higher opportunity for crack initiation and propagation along butt weld joints.

(ii) Both of the following cases are to be considered:

(1) where the brittle crack runs straight along the butt joint, and

(2) where the brittle crack initiates in the butt joint but deviates away from the weld and into the plate, or where the brittle crack initiates from any other weld (see Fig. XI 3-6) and propagates into the plate.

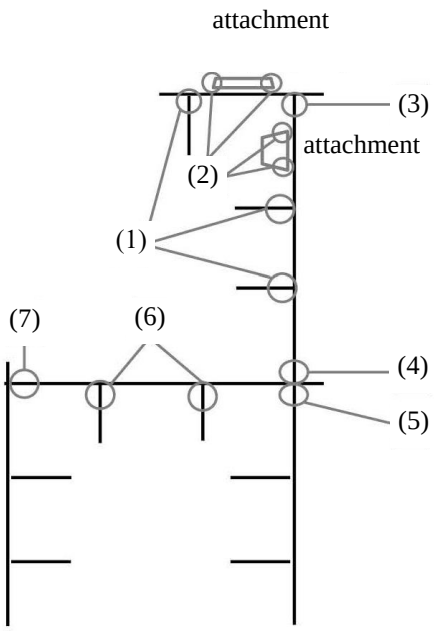

Note:
(1) Fillet weld between hatch side coaming plating, including top plating, and longitudinals;
(2) Fillet weld between hatch side coaming plating, including top plating and longitudinals, and attachments. (e.g., Fillet weld between hatch side top plating and hatch cover pad plating.);
(3) Fillet weld between hatch side coaming top plating and hatch side coaming plating;
(4) Fillet weld between hatch side coaming plating and upper deck plating;
(5) Fillet weld between upper deck plating and inner hull/bulkheads;
(6) Fillet weld between upper deck plating and longitudinal; and
(7) Fillet weld between sheer strakes and upper deck plating.

Fig. XI 3-6
Other Weld Areas

(c) Concept examples of brittle crack arrest design

The following are considered to be acceptable examples of measures that can be used on a brittle crack arrest-design to prevent brittle crack propagations. The detail design arrangements are to be submitted to the Society for approval. Other measures may be considered and accepted for review by the Society.

Brittle crack arrest design for 3.10.4(b)(ii)(2) of this Chapter:

(i) Brittle crack arresting steel is to be used for the upper deck plating along the cargo hold region in a way suitable to arrest a brittle crack initiating from the coaming and propagating into the structure below.

Brittle crack arrest design for 3.10.4(b)(ii)(1) of this Chapter:

(ii) Where the block to block butt welds of the hatch side coaming and those of the upper deck are shifted, this shift is to be greater than or equal to 300 mm. Brittle crack arrest steel is to be provided for the hatch side coaming plating.

(iii) Where crack arrest holes are provided in way of the block-to-block butt welds at the region where hatch side coaming weld meets the deck weld, the fatigue strength of the lower end of the butt weld is to be assessed. Additional countermeasures are to be taken for the possibility that a running brittle crack may deviate from the weld line into upper deck or hatch side coaming. These countermeasures are to include the application of brittle crack arrest steel in hatch side coaming plating.

(iv) Where arrest insert plates of brittle crack arrest steel or weld metal inserts with high crack arrest toughness properties are provided in way of the block-to-block butt welds at the region where hatch side coaming weld meets the deck weld, additional countermeasures are to be taken for the possibility that a running brittle crack may deviate from the weld line into upper deck or hatch side coaming. These countermeasures are to include the application of brittle crack arrest steel in hatch side coamings plating.

(v) The application of enhanced NDT particularly time of flight diffraction (TOFD) technique using stricter defect acceptance in lieu of standard UT technique specified in 3.10.2 of this Chapter can be an alternative to (ii), (iii) and (iv) above.

(d) Selection of brittle crack arrest steels

(i) The brittle crack arrest steels fitted in the upper deck region of container ships are to comply with Table XI 3-16 where suffixes BCA1 and BCA2 are defined in Table XI 3-5 of this chapter.

(ii) The brittle crack arrest steel property is to be selected for each individual structural member with thickness above 50 mm according to Table XI 3-16.

(iii) When brittle crack arrest steels as specified in Table XI 3-16 are used, the weld joints between the hatch coaming side and the upper deck are to be partial penetration weld details approved by the Society.

In the vicinity of ship block joints, alternative weld details may be used for the deck and hatch coaming side connection provided additional means for preventing the crack propagation are implemented and agreed by the Society in this connection area.

3.10.5 Measures for extremely thick steel plates

The thickness and the yield strength shown in the Table XI 3-17 below apply to the hatch coaming top plating and side plating, and are the controlling parameters for the application of countermeasures.These controlling parameters are not applicable for upper deck.

If the as built thickness of the hatch coaming structure is below the values contained in the table, countermeasures are not necessary regardless of the thickness and yield strength of the upper deck.

Table XI 3-16
Brittle Crack Arrest Steel Requirement in Function of Structural Members and Thickness

Structural Members plating(1)	Thickness (mm)	Brittle crack arrest steel requirement
Upper deck	$50 < t \leq 100$	Steel grade YP36 or 40 with suffix BCA1
Hatch coaming side	$50 < t \leq 80$	Steel grade YP 40 or 47 with suffix BCA1
	$80 < t \leq 100$	Steel grade YP 40 or 47 with suffix BCA2

Note:
(1) Excluding their attached longitudinals

Table XI 3-17
Measures for Extremely Thick Steel Plates

Yield Strength (kgf/mm^2)	Thickness (mm)	Option(3)	Measures			
			1	2	3+4	5
36	50 < t ≤ 85	-	N.A.	N.A.	N.A.	N.A.
	85 < t ≤ 100	-	X	N.A.	N.A.	N.A.
40	50 < t ≤ 85	-	X	N.A.	N.A.	N.A.
	85 < t ≤ 100	A	X	N.A.	X	X
		B	X(6)	N.A.(7)	N.A.	X
47 (FCAW) (4)	50 < t ≤ 100	A	X	N.A.	X	X
		B	X(6)	N.A.(7)	N.A.	X
47 (EGW) (5)	50 < t ≤ 100	-	X	N.A.	X	X

Measures:
1. NDT other than visual inspection on all target block joints (during construction) See 3.10.2 of this Chapter.
2. Periodic NDT other than visual inspection on all target block joints (after delivery) See 3.10.3 of this Chapter.
3. Brittle crack arrest design against straight propagation of brittle crack along weldline to be taken (during construction) See 3.10.4(c)(ii), (iii) or (iv) of this Chapter.
4. Brittle crack arrest design against deviation of brittle crack from weldline (during construction) See 3.10.4(c)(i) of this Chapter.
5. Brittle crack arrest design against propagation of cracks from other weld areas such as fillets and attachment welds. (during construction) See 3.10.4(c)(i) of this Chapter.

Notes:
(1) "X" means "To be applied".
(2) "N.A." means "Need not to be applied".
(3) Selectable from option "A" and "B".
(4) FCAW means Flux Cored Arc Welding.
(5) EGW means Electro-Gas Welding.
(6) See 3.10.4(c)(v) of this Chapter.
(7) May be required at the discretion of the Society.

3.11 Weldability Tests

3.11.1 General

Weldability tests are required for plates and are to be carried out on samples of the thickest plate. Tests are required for normal strength grade E and for higher strength steels.

3.11.2 Preparation and welding of the test assemblies

The following tests are in general required:

(a) 1 butt weld test assembly welded with a heat input approximately 15 kJ/cm

(b) 1 butt weld test assembly welded with a heat input approximately 50 kJ/cm.

The butt weld test assemblies are to be prepared with the weld seam transverse to the plate rolling direction, so that impact specimens will result in the longitudinal direction. The bevel preparation should be preferably 1/2V or K.

The welding procedure should be as far as possible in accordance with the normal welding practice used at the yards for the type of steel in question.The welding parameters including consumables designation and diameter, pre-heating temperatures, interpass temperatures, heat input, number of passes, etc. are to be reported.

3.11.3 Type of tests

From the test assemblies the following test specimens are to be taken:

(a) 1 cross weld tensile test

(b) a set of 3 Charpy V-notch impact specimens transverse to the weld with the notch located at the fusion line and at a distance 2, 5 and minimum 20 mm from the fusion line. The fusion boundary is to be identified by etching the specimens with a suitable reagent. The test temperature is to be the one prescribed for the testing of the steel grade in question.

(c) Hardness tests HV 5 across the weldment. The indentations are to be made along a 1 mm transverse line beneath the plate surface on both the face side and the root side of the weld as follows:

(i) Fusion line

(ii) HAZ: at each 0.7 mm from fusion line into unaffected base material (6 to 7 minimum measurements for each HAZ)

The maximum hardness value should not be higher than 350 HV.

A sketch of the weld joint depicting groove dimensions, number of passes, hardness indentations should be attached to the test report together with photomacrographs of the weld cross section.

3.11.4 Other tests

Additional tests such as cold cracking tests, CTOD, or other tests may be required in the case of newly developed type of steel, outside the scope of IACS UR W11, or when deemed necessary by the Society.

Chapter 4

Rolled Steels for Boilers, Pressure Vessels and Low Temperature Service

4.1 General

4.1.1 This chapter gives the requirements for hot rolled steels intended for use in welded constructions of boilers, pressure vessels, hull structures exposed to low temperature, storage tanks and process pressure vessels for liquefied gases.

4.1.2 The requirements of this chapter in applying to the steel plates are limited in thickness as follows:

(a) Rolled steels for boilers and pressure vessels to be used at high temperature.
- (i) Grades 1-410, 1-450 and 1-480 :Up to 200 mm
- (ii) Grades 2-450, and 2-480 :Up to 150 mm

(b) Rolled steels for pressure vessels to be used at atmospheric temperature.
- (i) Grade 0-235 :Up to 200 mm
- (ii) Grade 0-315 :Up to 100 mm
- (iii) Grades 0-355, 0-410, 0-450 and 0-490 :Up to 75 mm

(c) Rolled steels for low temperature service.
- (i) All Grades :Up to 40 mm

(d) Any requirement regarding steel plates over the above limited thickness is left to the discretion of the Society.

4.1.3 Steels having characteristics differing from the requirements in this chapter may be accepted subject to compliance with the requirements of 1.1.2 and 1.1.3 of this Part.

4.1.4 Steels are to be manufactured at works which have been approved by the Society for the type and grade of steel which is being supplied in compliance with the requirements given in 1.2 of this Part.

4.2 Rolled Steels for Boilers and Pressure Vessels to be used at High Temperature

4.2.1 Chemical composition

The chemical composition of the steels is to be in compliance with the requirements given in Table XI 4-1. The rimmed steel is not acceptable.

Table XI 4-1
Chemical Composition of Rolled Steels for Boilers and Pressure Vessels to be used at High Temperature

Material Grade	Chemical Composition (%)					
	C	Si	Mn	P	S	Mo
1-410	(1)	0.15~0.30	0.90 max. (2), (3)	0.035 max. (4)	0.040 max.	–
1-450						
1-480						
2-450	(1)	0.15~0.30	0.90 max.	0.035 max.	0.040 max.	0.45~0.60
2-480						

Notes:

(1) The maximum carbon content (%) is to be as follows:

Material Grade	Steel Plates, thickness t. (mm)				Steel Bars and Stays
	t ≤ 25	25 < t ≤ 50	50 < t ≤ 100	t >100	
1-410	0.24	0.27	0.30		0.30
1-450	0.28	0.31	0.33		0.33
1-480	0.31	0.33	0.35		–
2-450	0.18	0.21	0.23	0.25	–
2-480	0.20	0.23	0.25	0.27	–

(2) For Grade 1-450 plates exceeding 25 mm in thickness, maximum Mn-content may be extended to 1.00% subject to C-content is less than 0.30%.

(3) For Grade 1-480 plates, maximum Mn-content may be extended to 1.15% subject to C-content is less than 0.30%.

(4) The maximum P-content for steel bars and stays of Grades 1-410 and 1-450 may be extended to 0.05%.

4.2.2 Heat treatment.

(a) Plates of Grades, 1-410, 1-450 and 1-480 not exceeding 50 mm in thickness, and plates of Grades 2-450 and 2-480 not exceeding 38 mm in thickness are generally to be as rolled. However, they may be heat-treated as deemed necessary.

(b) Plates exceeding the thickness as specified in 4.2.2(a) above are to be treated to produce grain refinement either by normalizing or heating uniformly for hot forming. If the required treatment is to be obtained in conjunction with the hot forming operation, the temperature to which the plates are heated for hot forming is to be equivalent to and is not to exceed significantly the normalizing temperature. In principle, normalizing is to be performed by the steel manufacturer.

(c) Where the purchaser orders that the heat treatment and/or the stress relieving will be carried out by the fabricator, the tests at the steel works are to be made on a condition as specified in 4.5.1(b) of this Part. In this case, the treatment procedure performing in the tests is to be reported in test certificate for guidance of the fabricator to treat the plates.

(d) The heat treatment of the bars and stays is to be as deemed appropriate by the Society.

4.2.3 Mechanical properties

The mechanical properties of steels are to be in compliance with the requirements given in Table XI 4-2.

Table XI 4-2
Mechanical Properties and Test Requirements of Rolled Steels for Boiler and Pressure Vessels to be used at High Temperature

Material Grade	Tensile Test			Bending Test for Bars and Stays	No. of Specimens
	Tensile Strength (N/mm^2)	Yield Stress min. (N/mm^2)	Min. Elongation on L = $5.65\sqrt{A}$ (1) (%)	Mandrel Dia. × 180° max. (mm)	
1-410	410 ~ 550	225	24	(2)	(3)
1-450	450 ~ 590	245	22		
1-480	480 ~ 620	265	20	–	
2-450	450 ~ 590	255	23		
2-480	480 ~ 620	275	21		

Notes:

(1) For plates over 90 mm and up to 150 mm in thickness, the specified minimum elongation may be reduced by 0.5% for each increment of 12.5 mm or fraction thereof over 90 mm in thickness. Such reduction, however, is limited to 3%.

(2) The ratio of the max. mandrel dia. to the diameter of the bending test specimens is to be as follows:

Grade	1-410	1-450
d ≤ 25	1.5	2.0
25 < d ≤ 50	2.0	2.5
50 < d ≤ 75	2.5	2.5
75 < d	2.5	3.0

Where: d = Diameter or distance between flats of steel bars and stays, in mm.

(3) Number of test specimens:

(a) For plates: One tensile test specimen is to be taken from one end of each piece of same heat.

(b) For bars and stays:

The material in each batch is to be of the same section size, from the same cast and in the same heat condition. Number of test specimens are to be as follows:

Mass of Batch, W (tons)	Number of Test Specimens (Set of tensile and bending)
W ≤ 25	1
25 < W ≤ 30	2
30 < W	2 plus 1 for each 10 tons of excess or fraction thereof.

4.3 Rolled Steel Plates for Pressure Vessels to be used at Atmospheric Temperature

4.3.1 Chemical composition

The chemical composition of the steels are to be in compliance with the requirements given in Table XI 4-3. The rimmed steel is not acceptable.

Table XI 4-3
Chemical Composition of Rolled Steel Plates for Pressure Vessels to be used at Atmospheric Temperature

<table>
<tr><th rowspan="2">Material Grade</th><th colspan="5">Chemical Composition (%)</th><th rowspan="2">Carbon Equivalent (2) (%)</th></tr>
<tr><th>C</th><th>Si</th><th>Mn</th><th>P</th><th>S</th></tr>
<tr><td>0-235</td><td>0.18 max. (1)</td><td>0.15 ~ 0.35</td><td>1.40 max.</td><td rowspan="6">0.030 max.</td><td rowspan="6">0.030 max.</td><td rowspan="4">–</td></tr>
<tr><td>0-315</td><td>0.18 max.</td><td rowspan="2">0.15 ~ 0.55</td><td>1.50 max.</td></tr>
<tr><td>0-355</td><td>0.20 max.</td><td rowspan="3">1.60 max.</td></tr>
<tr><td>0-410</td><td rowspan="3">0.18 max.</td><td rowspan="3">0.15 ~ 0.75</td></tr>
<tr><td>0-450</td><td>0.43 (0.45) max.</td></tr>
<tr><td>0-490</td><td>0.44 (0.46) max.</td></tr>
</table>

Notes:

(1) The maximum carbon content for plates over 100 mm in thickness of Grade 0-235 may be extended to 0.20%.

(2) Carbon equivalent of Grades 0-450 and 0-490 is to be calculated from the formula given in Note 2 of Table XI 3-4. The values shown in parentheses are applicable to the plates exceeding 50 mm in thickness.

4.3.2 Heat treatment

(a) Grades 0-235, 0-315 and 0-355 steel plates are generally to be as rolled. However, they may be properly heat treated or controlled rolled as deemed necessary.

(b) Grades 0-410, 0-450 and 0-490 steel plates are to be quenched and tempered. However, they may be normalized, controlled rolled or as rolled subject to the approval of the Society. In principle, normalizing is to be performed by the steel manufacturer.

(c) Where the purchaser orders that the heat treatment and/or the stress relieving will be carried out by the fabricator, the requirements in 4.2.2(c) above are to be applied.

4.3.3 Mechanical properties

The mechanical properties of the steels are to be in compliance with the requirements given in Table XI 4-4.

Table XI 4-4
Mechanical Properties and Test Requirements of Rolled Steel Plates for Pressure Vessels to be used at Atmospheric Temperature

<table>
<tr><th rowspan="3">Material Grade</th><th colspan="3">Tensile Test</th><th colspan="3">Impact Test</th><th rowspan="3">No. of Test Specimens</th></tr>
<tr><th rowspan="2">Tensile Strength</th><th rowspan="2">Yield Stress min. (1)</th><th rowspan="2">Elongation on $L = 5.65\sqrt{A}$ min.</th><th rowspan="2">Test Temperature</th><th colspan="2">Absorbed Energy min.</th></tr>
<tr><th>Average of 3 Test Specimens</th><th>Individual</th></tr>
<tr><td></td><td>(N/mm²)</td><td>(N/mm²)</td><td>(%)</td><td>(°C)</td><td>(J)</td><td>(J)</td><td></td></tr>
<tr><td>0-235</td><td>400 ~ 510</td><td>235</td><td>23</td><td rowspan="3">0</td><td rowspan="6">47</td><td rowspan="6">27</td><td rowspan="6">(2)</td></tr>
<tr><td>0-315</td><td>490 ~ 610</td><td>315</td><td>22</td></tr>
<tr><td>0-355</td><td>520 ~ 640</td><td>355</td><td>20</td></tr>
<tr><td>0-410</td><td>550 ~ 670</td><td>410</td><td>16</td><td rowspan="3">–10</td></tr>
<tr><td>0-450</td><td>570 ~ 700</td><td>450</td><td>17</td></tr>
<tr><td>0-490</td><td>610 ~ 740</td><td>490</td><td>16</td></tr>
</table>

Notes:

(1) For plates over 50 mm in thickness, the specified minimum yield stress may be reduced by 20 N/mm² for each grade respectively. Grade 0-235 plate over 100 mm in thickness, the reduction is to be of 40 N/mm².

(2) One set of test specimens including one tensile and 3 impacts of Type N1 is to be taken from one end of each piece of same heat.

4.3.4 The rolled steel plates for hull construction, Grades D, E and all grades of higher strength steels, specified in Chapter 3 of this Part are also applicable for the construction of pressure vessels to be used at atmospheric temperature subject to the test specimens are taken as required in Note 2 of Table XI 4-4 and the test results are in compliance with the requirements in Chapter 3 of this Part. Any requirements regarding heat treatment of these plates is left to the discretion of the Society.

4.4 Rolled Steels for Low Temperature Service

4.4.1 Chemical composition

(a) The steels are to be of fully killed and fine grain treated with aluminum, niobium or vanadium grain refining elements contained either singly or in any combination. The chemical composition of the steels is to be in compliance with the requirements given in Table XI 4-5.

(b) When the steels are supplied in TMCP condition as defined in 3.4.2 of this Part, variations in the specified chemical composition may be allowed subject to the approval of the Society.

Table XI 4-5
Chemical Composition of Rolled Steels for Low Temperature Service

<table>
<tr><th rowspan="2">Material Grade</th><th colspan="6">Chemical Composition (%) (1)</th><th>Carbon Equivalent (3)</th></tr>
<tr><th>C</th><th>Si</th><th>Mn</th><th>P</th><th>S</th><th>Ni</th><th>(%)</th></tr>
<tr><td>3-235</td><td rowspan="3">0.14 max. (2)</td><td rowspan="3">0.10 ~ 0.50</td><td rowspan="3">0.70 ~ 1.60</td><td rowspan="3">0.030 max. (2)</td><td rowspan="3">0.025 max. (2)</td><td rowspan="3">–</td><td rowspan="3">0.41 max.</td></tr>
<tr><td>3-325</td></tr>
<tr><td>3-365</td></tr>
<tr><td>4-295</td><td rowspan="2">0.14 max.</td><td rowspan="4">0.15 ~ 0.30</td><td rowspan="2">0.70 max.</td><td rowspan="4">0.025 max.</td><td rowspan="4">0.025 max.</td><td>2.10 ~ 2.50</td><td rowspan="4">–</td></tr>
<tr><td>4-315</td><td>3.20 ~ 3.75</td></tr>
<tr><td>4-420</td><td>0.12 max.</td><td rowspan="2">0.90 max.</td><td>4.50 ~ 5.50</td></tr>
<tr><td>4-520</td><td>0.10 max.</td><td>8.50 ~ 9.50</td></tr>
</table>

Notes:

(1) The grain refining elements and residual elements are to comply with the manufacturing specifications approved by the Society.

(2) Where the design temperature of Grades 3-235, 3-325 and 3-365 is not lower than –40°C, the maximum contents of C, P and S may be extended to 0.18%, 0.035% and 0.035% respectively.

(3) Carbon equivalent is to be calculated from the formula given in Note 2 of Table XI 3-4.

4.4.2 Heat treatment

The heat treatments of the steels are to be in compliance with the requirements given in Table XI 4-6.

4.4.3 Mechanical properties

The mechanical properties of the steels are to be in compliance with the requirements given in Table XI 4-6.

Table XI 4-6
Mechanical Properties and Test Requirements of Rolled Steels for Low Temperature Service

Material Grade	Heat Treatment	Tensile Test			Impact Test		No. of Test Specimens
		Tensile Strength (N/mm²)	Yield Stress min. (N/mm²)	Elongation on $L = 5.65\sqrt{A}$ min. (%)	Test Temperature (2) (°C)	Absorbed Energy min. (3) Average of 3 Test Specimens (J)	
3-235	Normalized or TMCP	400 ~ 490	235	20	–50	41 (27)	(4)
3-325	Quenched and Tempered or TMCP	450 ~ 540	325		–60		
3-365		490 ~ 590	365	19	–60		
4-295	Normalized or Quenched and Tempered (1)	420 ~ 570	295	19	–70		
4-315		440 ~ 590	315		–95		
4-420		540 ~ 690	420		–110		
4-520	Double Normalized and Tempered (1)	690 ~ 835	520	18	–196		

Notes:

(1) Heat treatment may be conducted according to TMCP subject to the special approval of the Society.

(2) For Grades 3-235, 3-325 and 3-365 steels intended to be applied in a higher design temperature, the impact test may be carried out at a temperature 5°C below design temperature or –20°C whichever is lower.

(3) The values shown in parentheses are applicable to the test specimens taken with their principal axes perpendicular to the final direction of rolling.

(4) Number of test specimens:

(a) For plates:

One set of test specimens including one tensile and three impacts of Type N1 is to be taken from one end of each piece of same heat.

(b) For steels other than plates:

One set of test specimens including one tensile and three impacts of Type N1 is to be taken from each batch of every 10 tons and fraction thereof. The material in each batch is to be of the same section size, from the same cast and in the same heat condition.

4.4.4 Equivalent materials

The rolled steels for hull construction of Grades D, E, DH32/36/40, EH32/36/40 and FH32/36/40 specified in Chapter 3 of this Part are also applicable for the low temperature service, provided that:

(a) The steels are killed and fine grain treated, heat-treated by normalized or quenched and tempered or produced by TMCP.

(b) The test specimens are taken in the frequency complying with the requirements of Note 4 in Table XI 4-6.

(c) Minimum average absorbed energy of impact tests is not to be less than 41J (27J for transverse test specimens) at the test temperature of respective grade specified in Table XI 3-8.

(d) The "Z" grade steel plates and wide flats of 15 mm and over in thickness are to comply with the requirements of through thickness tensile tests as given in 3.8 of this Part.

(e) The steels are proven in compliance with the following requirements during manufacturing approval tests:

(i) Drop-weight tests in accordance with an accepted standard (e.g. ASTM E208) have been achieved that there is no break performance at –5°C.

(ii) The percentage of fibrous fracture in the impact test specimens after testing is not to be less than 50%.

The steels complying with the above requirements are to be affixed with a mark "–L" to the material grade designation, e.g. D-L, EH36-L, etc.

4.4.5 Design temperature

The applicable design temperatures for each grade of rolled steels for low temperature service depending on the thickness are given in Table XI 4-7.

Table XI 4-7
Applicable Design Temperature of Rolled Steels for Low Temperature Service

Grade	D, DH32/36/40	E, EH32/36/40	FH32/36/40	3-235	3-325, 3-365	4-295	4-315	4-420	4-520
Thickness t (mm)	Applicable Design Temperature (°C)								
t ≤ 25	–15	–35	–55	–45	–55	–65	–90	–105	–165
25 < t ≤ 30	–10	–30	–50	–40	–50	–60	–85	–100	
30 < t ≤ 35	–5	–25	–45	–35	–45	–55	–80	–95	
35 < t ≤ 40	0	–20	–40	–30	–40	–50	–75	–90	

4.5 Test Specimens

4.5.1 The required mechanical properties for the steels as specified in 4.2.3, 4.3.3 and 4.4.3 above are to be determined on the test specimens prepared in the following conditions:

(a) For steels which are treated as required in 4.2.2, 4.3.2 and 4.4.2 above, the test specimens are to be prepared in the same way as the steels represented.

(b) For steels which are to be heat treated but supplied without treatment as specified in 4.2.2(c) above, the test specimens are to be taken from a test sample which has been cut from the plates and given heat treatment in a manner simulating the treatment which will be applied to the plates.

(c) When stress relieving is required during the manufacturing process of the boilers and pressure vessels, in case where the procedure of stress relieving is not specified by the purchaser, the test specimens are to be taken from a test sample which has been cut from the plates and given stress relieving by heating them gradually and uniformly to a temperature of 600°C ~ 650°C, holding at that temperature for a period of at least one hour per 25 mm of thickness and cooling in still atmosphere to a temperature not exceeding 300°C. In the case of the steels which are to be heat treated and subsequently stress relieved, the test specimens are to be taken from the test samples which are stress relieved following heat treatment.

(d) The dimensions for test samples as specified in 4.5.1(b) and (c) above are to be sufficient for preparing the test, retest or additional test specimens.

4.5.2 Tensile test specimens

(a) For plates, the test specimens are to be taken from the position at approximately 1/4 of the width from one edge at end of the piece with their principal axes perpendicular to the final direction of rolling.

(b) For bars and stays, the test samples are to be taken from the position as specified in 3.5.2(c) of this Part. The principal axes of the test specimens may be parallel to the final direction of rolling.

(c) The test specimens are to be of Type T1, T2 or T3 as specified in Table XI 2-1.

4.5.3 Bending test specimens

(a) For bars and stays, the test specimens are to be taken with their principal axes parallel to the final direction of rolling.

(b) For bars and stays, the test specimens are to be of Type B2 as specified in Table XI 2-2.

4.5.4 Impact test specimens

The test specimens are to be taken in accordance with the requirements in 3.5.4 of this Part. For plates intended for use in the construction of liquefied gas cargo tanks and associated process pressure vessels as specified in 4.4 above, their principal axes are to be perpendicular to the final direction of rolling.

4.6 Quality Inspections

4.6.1 The requirements of quality inspections and repair of defects are to comply with those given in 3.6 and 3.7 of this Part except those for thickness tolerances stated in 3.6.7(a) and (b).

4.6.2 The dimensional tolerances of the rolled steels specified in this chapter are to comply with the followings:

(a) For plates, the minus tolerance 0.25 mm for the nominal thickness is permitted.

(b) For bars and stays, the allowable tolerances are to be as follows:

Nominal Diameter of Bar or Stay d (mm)	Tolerance (mm)
$d < 16$	± 0.4
$16 \leq d < 28$	± 0.5
$28 \leq d$	± 1.8%

Chapter 5
Steel Pipes and Tubes

5.1 General

5.1.1 This chapter gives the requirements for steel tubes intended for use in the construction of boilers and heat exchangers, and for steel pipes intended for use in the pressure piping systems and in cargo and process piping arrangements in ships for liquefied gases where the design temperature is less than 0°C.

5.1.2 Steel pipes and tubes specified in this chapter, unless, where the materials are intended to be used in Group III pressure vessel as stated in Part V and in Group-III piping system as stated in Part VI, are to be manufactured at the works which have been approved by the Society in compliance with the requirements given in 1.2 of this Part.

5.1.3 Steel pipes and tubes specified in this Chapter are to be manufactured by seamless process in hot-finished or cold-drawn condition or, unless otherwise specified hereunder, by electric resistance, induction or arc welded process in as welded condition or with subsequent hot-finished or cold-drawn conditioning.

5.1.4 Steel pipes and tubes having characteristics differing from the requirements in this Chapter may be accepted subject to compliance with the requirements given in 1.1.2 and 1.1.3 of this Part. Such pipes and tubes are to be given a special designation.

5.2 Steel Tubes for Boilers and Heat Exchangers

5.2.1 Manufacture

(a) The steel tubes are to be manufactured in accordance with the processes given in 5.1.3 of this Part, unless, where the tubes of grades T21, T22, T23 and T24 in welded process are not acceptable.

(b) The tubes are to be supplied in a heat-treated condition in compliance with the requirements of Table XI 5-1.

Table XI 5-1
Requirements of Heat-treatment for Steel Pipes and Tubes

<table>
<tr><th rowspan="2">Material Grade</th><th colspan="2">Seamless Process</th><th colspan="3">Welded Process</th></tr>
<tr><th>Hot-finished</th><th>Cold-drawn</th><th>As welded</th><th>Hot-finished</th><th>Cold-drawn</th></tr>
<tr><td>T11</td><td rowspan="3">Any</td><td rowspan="3">A or N</td><td rowspan="3">N</td><td rowspan="2">Any</td><td rowspan="3">N</td></tr>
<tr><td>T12</td></tr>
<tr><td>T13</td><td>A</td></tr>
<tr><td>T21</td><td colspan="2" rowspan="4">A or N+T</td><td colspan="3" rowspan="4">Not applicable</td></tr>
<tr><td>T22</td></tr>
<tr><td>T23</td></tr>
<tr><td>T24</td></tr>
<tr><td>P11</td><td rowspan="3">Any</td><td rowspan="3">A or N</td><td colspan="2">Any</td><td>A or N</td></tr>
<tr><td>P12</td><td colspan="3" rowspan="5">Not applicable</td></tr>
<tr><td>P13</td></tr>
<tr><td>P21</td><td colspan="2" rowspan="2">A</td></tr>
<tr><td>P22</td></tr>
<tr><td>P23</td><td colspan="2" rowspan="2">A or N+T</td></tr>
<tr><td>P24</td></tr>
<tr><td>P31L</td><td colspan="2" rowspan="3">N or N+T</td><td colspan="3">N or N+T</td></tr>
<tr><td>P32L</td></tr>
<tr><td>P33L</td><td colspan="3" rowspan="2">Not applicable</td></tr>
<tr><td>P34L</td><td colspan="2">N_2+T or Q+T</td></tr>
</table>

Symbols used in this Table are as follows:

Any : Heat-treatment is not required, however, they may be heat-treated as deemed necessary.
A: Annealed
N: Normalized
N+T : Normalized and tempered
N_2+T : Double normalized and tempered
Q+T : Quenched and tempered
Not applicable: The materials manufactured by welded process are not acceptable.

5.2.2 Chemical composition

The chemical composition and deoxidation method of the steel tubes are to comply with the requirements given in Table XI 5-2.

Table XI 5-2
Chemical Composition and Deoxidation Method of Steel Tubes for Boiler and Heat Exchanger

<table>
<tr><th colspan="2" rowspan="2">Material Grade</th><th rowspan="2">Method of Deoxidation</th><th colspan="7">Chemical Composition (%)</th></tr>
<tr><th>C</th><th>Si</th><th>Mn</th><th>P</th><th>S</th><th>Cr</th><th>Mo</th></tr>
<tr><td rowspan="3">Carbon Steel</td><td>T11</td><td>Any Method</td><td rowspan="2">0.18 max.</td><td>0.35 max.</td><td>0.25 ~ 0.60</td><td rowspan="3">0.035 max.</td><td rowspan="3">0.035 max.</td><td rowspan="3">–</td><td rowspan="3">–</td></tr>
<tr><td>T12</td><td rowspan="2">Killed</td><td rowspan="2">0.10 ~ 0.35</td><td>0.30 ~ 0.60</td></tr>
<tr><td>T13</td><td>0.32 max.</td><td>0.30 ~ 0.80</td></tr>
<tr><td rowspan="4">Low Alloy Steel</td><td>T21</td><td rowspan="4">Killed</td><td colspan="2">0.10 ~ 0.20</td><td>0.10 ~ 0.50</td><td>0.30 ~ 0.80</td><td rowspan="2">0.035 max.</td><td rowspan="2">0.035 max.</td><td>–</td><td rowspan="3">0.45 ~ 0.65</td></tr>
<tr><td>T22</td><td colspan="2" rowspan="3">0.15 max.</td><td>0.50 max.</td><td rowspan="3">0.30 ~ 0.60</td><td rowspan="3">0.030 max.</td><td rowspan="3">0.030 max.</td><td>0.80 ~ 1.25</td></tr>
<tr><td>T23</td><td>0.50 ~ 1.00</td><td>1.00 ~ 1.50</td></tr>
<tr><td>T24</td><td>0.50 max.</td><td>1.90 ~ 2.60</td><td>0.87 ~ 1.13</td></tr>
</table>

5.2.3 Mechanical properties

(a) The mechanical properties of the steel tubes are to comply with the requirements given in Table XI 5-3.

(b) The steel tubes are to be subjected to the following mechanical tests in compliance with the requirements as given in 5.2.3(a) above: Tensile test; Flattening test; Flaring test or Flanging test; Reverse flattening test for welded tubes.

(c) The procedures of the mechanical tests are to comply with requirements given in Chapter 2 of this Part.

Table XI 5-3
Mechanical Properties and Test Requirements of Steel Tubes for Boiler and Heat Exchanger

Material Grade		Tensile Test (1)			Flattening Test	Flaring or Flanging Test (4)			No. of Test Specimens
		Tensile Strength min. (N/mm²)	Yield Stress min. (N/mm²)	Elongation on $L = 5.65\sqrt{A}$ min. (2) (%)	Constant "e" for Formula of H (3)	External Dia. at mouth of Flare or Flange (5)			
						Flaring	Flanging		
							D < 63	63 ≤ D	
Carbon Steel	T11	320	175	26 (22)	0.09	1.20D	1.30D	D+20	(6), (8)
	T12	340					–	–	(7), (8)
	T13	410	255	21 (17)	0.08				
Low Alloy Steel	T21	380	205			1.14D			
	T22	410							
	T23								
	T24								

Notes:

(1) In case a test specimen of Type T2 as given in Table XI 2-1 is taken from the welded tubes, the test specimen is to be taken from the part in which the welded line is not included.

(2) The values of elongation in parentheses are applicable to the test specimens taken transversely. In this case, the sampling material is to be heated 600°C to 650°C after being flattened and annealed in order to make it free from strain.

(3) See 2.5.2 of this Part.

(4) Flanging test is only required for Grade T11 tubes having a wall thickness neither more than 1/10 of the outside diameter nor more than 5 mm.

(5) Where: D = Outside diameter of the tube, mm.

(6) No. of test specimens for Grade T11 seamless tubes:
One sampling tube is to be selected from each lot of 100 lengths or fraction thereof with same size and same heat. Each one of tensile, flattening and flaring or flanging test specimens is to be taken from each of the sampling tubes.

(7) No. of test specimens for seamless tubes other than Grade T11:
One sampling tube is to be selected from each lot of 50 lengths or fraction thereof with same size and same heat. Each one of tensile, flattening and flaring test specimens is to be taken from each of the sampling tubes.

(8) For welded tubes, in addition to the above Note 6 or Note 7, one sampling tube is to be selected from each lot of 50 lengths or fraction thereof with same size and same heat. One reverse flattening test specimen is to be taken from each of the sampling tubes. In this case, the sampling tubes may be the same as that in above Note 6 or Note 7.

5.3 Steel Pipes for Pressure Pipings

5.3.1 Manufacture

(a) The steel pipes are to be manufactured in accordance with the processes given in 5.1.3 of this Part, unless, where the pipes of Grades P13, P21, P22, P23 and P24 in welded process are not acceptable.

(b) The pipes are to be supplied in a heat-treated condition in compliance with the requirements of Table XI 5-1.

5.3.2 Chemical composition

The chemical composition and deoxidation method of the steel pipes are to comply with the requirements given in Table XI 5-4.

Table XI 5-4
Chemical Composition and Deoxidation Method of Steel Pipes for Pressure Piping

<table>
<tr><th colspan="2" rowspan="2">Material Grade</th><th rowspan="2">Method of Deoxidation</th><th colspan="7">Chemical Composition (%)</th></tr>
<tr><th>C</th><th>Si</th><th>Mn</th><th>P</th><th>S</th><th>Cr</th><th>Mo</th></tr>
<tr><td rowspan="3">Carbon Steel</td><td>P11</td><td>(See Note)</td><td>0.25 max.</td><td rowspan="2">0.35 max.</td><td>0.30 ~ 0.90</td><td rowspan="2">0.040 max.</td><td rowspan="2">0.040 max.</td><td rowspan="3">–</td><td rowspan="3">–</td></tr>
<tr><td>P12</td><td rowspan="2">Killed</td><td>0.30 max.</td><td>0.30 ~ 1.20</td></tr>
<tr><td>P13</td><td>0.33 max.</td><td>0.10 ~ 0.35</td><td>0.30 ~ 1.50</td><td>0.035 max.</td><td>0.035 max.</td></tr>
<tr><td rowspan="4">Low Alloy Steel</td><td>P21</td><td rowspan="4">Killed</td><td>0.10 ~ 0.20</td><td>0.10 ~ 0.50</td><td>0.30 ~ 0.80</td><td rowspan="2">0.035 max.</td><td rowspan="2">0.035 max.</td><td>–</td><td rowspan="3">0.45 ~ 0.65</td></tr>
<tr><td>P22</td><td rowspan="3">0.15 max.</td><td>0.50 max.</td><td rowspan="3">0.30 ~ 0.60</td><td>0.80 ~ 1.25</td></tr>
<tr><td>P23</td><td>0.50 ~ 1.00</td><td rowspan="2">0.030 max.</td><td rowspan="2">0.030 max.</td><td>1.00 ~ 1.50</td></tr>
<tr><td>P24</td><td>0.50 max.</td><td>1.90 ~ 2.60</td><td>0.87 ~ 1.13</td></tr>
</table>

Notes:

Grade P11 seamless pipes: Semi-killed or killed.

Grade P11 welded pipes: Any method.

5.3.3 Mechanical properties

(a) The mechanical properties of the steel pipes are to comply with the requirements given in Table XI 5-5.

(b) The steel pipes are to be subjected to the following mechanical tests in compliance with the requirements as given in 5.3.3(a) above:

Tensile test.
Flattening test or bending test.

(c) The procedures of the mechanical tests are to comply with the requirements given in Chapter 2 of this Part.

Table XI 5-5
Mechanical Properties and Test Requirements of Steel Pipes for Pressure Piping

Material Grade		Tensile Test (1)			Flattening Test (3)	Bending Test (5)	No. of Test Specimens
		Tensile Strength min. (N/mm^2)	Yield Stress min. (N/mm^2)	Elongation on $L = 5.65\sqrt{A}$ min. (2) (%)	Constant "e" for Formula of H (4)	Mandrel Dia. × Angle	
Carbon Steel	P11	370	215	24 (20)	0.08	12 times the outside dia. of pipes × 90°	(6)
	P12	410	245	21 (17)	0.07		(7)
	P13	480	275	19 (15)			
Low Alloy Steel	P21	380	205	21(17)	0.08	–	
	P22	410					
	P23						
	P24						

Notes:

(1) Where a test specimen of Type T2 as given in Table XI 2-1 is taken from welded pipes, the test specimen is to be taken from the part in which the welded line is not included.

(2) The values of elongation in parentheses are applicable to the test specimens taken transversely. In this case, the sampling material is to be heated 600°C to 650°C after being flattened and annealed in order to make it free from strain.

(3) The flattening test is required of the pipes of which the bending test is not required. See Note 5.

(4) See 2.5.2 of this Part.

(5) Bending test is only required of carbon steel pipes of all grades having outside diameter not exceeding 50 mm. In case of the welded pipes, the welded line is to be so placed as it is subjected to the greatest tension during the test.

(6) No. of test specimens for Grade P11:

(a) For pipes of 150 mm and under in outside diameter:
One sampling pipe is to be selected from each lot of 200 lengths or fraction thereof with same size and same heat.
Each one of tensile and flattening or bending test specimen is to be taken from each of the sampling pipe.

(b) For pipes over 150 mm in outside diameter:
One sampling pipe is to be selected from each lot of 100 lengths or fraction thereof with same size and same heat.
Each one of tensile and flattening test specimen is to be taken from each of the sampling pipe.

(7) No. of test specimens for steel pipes other than Grade P11:
One sampling pipe is to be selected from each lot of 50 lengths or fraction thereof with same size and same heat.
Each one of tensile and flattening test specimen is to be taken from each of the sampling pipe.

5.4 Steel Pipes for Low Temperature Service

5.4.1 Manufacture

(a) The requirements in applying to the steel pipes for low temperature service are limited in thickness up to 25 mm. Any requirement regarding these pipes over 25 mm in thickness is left to the discretion of the Society.

(b) The steel pipes are to be manufactured in accordance with the processes given in 5.1.3 of this Part, unless, where the pipes of Grades P33L and P34L in welded process are not acceptable.

(c) The pipes are to be supplied in a heat-treated condition in compliance with the requirements of Table XI 5-1.

5.4.2 Chemical composition

The steel pipes are to be of killed and fine grain treated. The chemical composition of the steel pipes is to be in compliance with requirements given in Table XI 5-6.

Table XI 5-6
Chemical Composition of Steel Pipes for Low Temperature Service

Material Grade	Chemical Composition (%) (See Note)					
	C (max.)	Si	Mn (max.)	P (max.)	S (max.)	Ni
P31L	0.25	max. 0.35	1.60	0.035	0.035	–
P32L	0.19	0.10 ~ 0.35	0.90			2.00 ~ 2.50
P33L	0.18			0.030	0.030	3.20 ~ 3.80
P34L	0.13					8.50 ~ 9.50

Note: The grain refining elements and residual elements are to comply with the manufacturing specifications approved by the Society.

5.4.3 Mechanical properties

(a) The mechanical properties of the steel pipes are to comply with the requirements given in Table XI 5-7.

(b) The steel pipes are to be subjected to the following mechanical tests in compliance with the requirements as given in 5.4.3(a) above: Tensile test; Flattening test or Bending test; Impact test.

(c) The procedures of the mechanical tests are to comply with the requirements given in Chapter 2 of this Part.

Table XI 5-7
Mechanical Properties and Test Requirements of Steel Pipes for Low Temperature Service

Material Grade	Applicable Design Temperature	Tensile Test (1), (2)			Flattening Test (4)	Bending Test (6)	Impact Test		No. of Test Specimens
		Tensile Strength min.	Yield Stress min.	Elongation on $L = 5.65\sqrt{A}$ min. (3)	Constant "e" for Formula of H (5)	Mandrel Dia. × Angle	Test Temperature (7)	Absorbed Energy, min. Average of 3 Test Specimens	
	(°C)	(N/mm²)	(N/ mm²)	(%)			(°C)	(J)	
P31L	–55	380	205	26 (19)	0.08	12 times the outside dia of pipes × 90°	–60	27	(8), (9)
P32L	–65	450	245	20 (14)			–70	34	
P33L	–90	450	245				–95		
P34L	–165	680	520	15 (11)			–196	41	

Notes:

(1) Where a test specimen of Type T2 as given in Table XI 2-1 is taken from the electric resistance welded pipes, the test specimen is to be taken from the part in which the welded line is not included.

(2) Where the nominal diameter of steel pipes is 200 mm and over, the tensile test specimen may be taken transversely.

(3) The values of elongation in parentheses are applicable to the test specimens taken transversely. In this case, the sampling material is to be heated 600°C after being flattened and annealed in order to make it free from strain.

(4) The flattening test is required of the pipes of which the bending test is not required. See Note 6.

(5) See 2.5.2 of this Part.

(6) Bending test is only required of steel pipes of all grades having outside diameter not exceeding 50 mm. In case of the welded pipes, the welded line is to be placed on the side subject to the greatest tension during the test.

(7) For Grade P31L steel pipes intended to be applied in a higher design temperature, the impact test may be carried out at a temperature 5°C below design temperature or –20°C, whichever is the lower.

(8) No. of test specimens:

One sampling pipe is to be taken from each lot of 50 lengths or fraction thereof with same size and same heat.

One tensile test specimen, one flattening or bending test specimen and one set of three impact test specimens of Type N1 are to be taken from each of the sampling pipes.

(9) For welded pipes, in addition to the above Note 8, one set of three impact test specimens of Type N1 is to be taken from the middle of pipe wall thickness, and is notched perpendicular to surface of pipe at center of weld metal.

5.5 Hydraulic Tests

5.5.1 Each pipe and tube is to be subjected to a satisfactory hydraulic test at the manufacturer's works by a pressure determined from the following formula and need not to exceed 20 MPa.

$$P = \frac{1.2Yt}{D}$$

Where:

P = Hydraulic test pressure, in MPa.

t = Wall thickness of pipe or tube, in mm.

D = Outside diameter of pipe or tube, in mm.

Y = Specified minimum yield stress, in N/mm^2.

5.5.2 Notwithstanding the requirements of 5.5.1 above, the test pressure in compliance with a recognized national or international standard may be accepted subject to special approval of the Society.

5.5.3 Either an ultrasonic or eddy current test can be accepted in lieu of the hydraulic test, subject to special approval.

5.5.4 In case the tubes or pipes intend only for stanchion, the hydraulic test may be omitted.

5.5.5 Unless otherwise agreed, the manufacturer's certificate of satisfactory hydraulic test will be accepted.

5.6 Quality Inspections

5.6.1 Dimensional tolerances

(a) The tolerances on the wall thickness and diameter of the pipes and tubes are to be in accordance with a recognized national or international standard.

(b) Notwithstanding the requirements of (a) above, wall thickness of the steel tubes for boiler and heat exchanger in minus tolerance is not acceptable.

5.6.2 The finished tubes and pipes are to have a workmanlike internal and outer surfaces and to be free from any defects prejudicial to their intended proper applications. The wall thickness is to be regular and within the specified tolerance throughout.

5.6.3 The tubes and pipes are to be presented for visual examination and verification of dimensions.

Chapter 6
Steel Castings

6.1 General

6.1.1 This chapter gives the requirements for steel castings intended for ship and machinery construction, and for use in liquefied gas piping systems where the design temperature is lower than 0°C.

6.1.2 The material grades of steel castings specified in this Chapter are designated as follows:

(a) "C1-xxx" for carbon steel castings, where xxx is a figure to represent the specified minimum tensile strength in N/mm^2 of the design purpose.

(b) "C3-LA", "C3-LB", "C4-LA" and "C4-LB" for low temperature service steel castings.

6.1.3 For low-alloy and alloy steel castings, the steel-making processes, chemical compositions, heat-treatments, mechanical properties, etc. are to comply with the requirements of the recognized national or international standards or of the special design specifications approved by the Society. For such materials, the grade marks designated by the standards or the approved design specifications are applicable.

6.1.4 Where steel castings having characteristics differing from those prescribed in this chapter are used, the requirements in 1.1.2 and 1.1.3 of this Part are to be complied with.

6.2 Manufacture

6.2.1 Steel castings are to be made at foundries which have been approved by the Society in compliance with the requirements given in 1.2 of this Part.

6.2.2 Steel castings are to be made from killed steels and to be of uniform grain, free from blowholes, porous spots or other defects which may affect the service performance of the casting.

6.2.3 All flame cutting, scarfing or arc-air gouging to remove surplus metal is to be undertaken in accordance with recognized good practice and is to be carried out before the final heat treatment. Preheating is to be employed where necessitated by the chemical composition and/or thickness of the casting. The affected areas are to be either machined or ground smooth.

6.2.4 Where two or more castings are joined by welding to form a composite item, details of the proposed welding procedure are to be submitted for approval.

6.2.5 The surfaces of steel castings are not to be hammered, peened nor treated in any way which may obscure defects.

6.3 Chemical Composition

6.3.1 The chemical composition of carbon steel castings and low temperature service steel castings are to comply with the requirements given in Tables XI 6-1 and XI 6-4 respectively.

6.3.2 The manufacturer is to make a ladle analysis of each melt and the results are to be reported to the Surveyor.

6.3.3 Except where otherwise specified, suitable grain refining elements may be used at the discretion of the manufacturer. The content of such elements is to be reported in the ladle analysis.

6.3.4 Carbon steel castings which are intended for parts of a welded fabrication are to be of weldable quality with a carbon content generally not exceeding 0.23%.

6.3.5 Where carbon steel with higher carbon content than 0.23%, or low alloy and alloy steels, are intended for welding, full details of the proposed welding procedure and specification including preheating temperature and any post-weld heat treatment proposed are to be submitted to the Society for approval.

Table XI 6-1
Chemical Composition of Carbon Steel Castings for Ship and Machinery Construction

Material Grade		Chemical Composition (%)					
		C (max.)	Si (max.)	Mn	P (max.)	S (max.)	Residual Elements (max.)
C, C-Mn Carbon Steel Castings	Cl-non-welded construction	0.40	0.60	0.50 ~ 1.60	0.040	0.040	Cu 0.30 Cr 0.30 Ni 0.40 Mo 0.15 Total 0.80
	Cl-welded construction	0.23		Max. 1.60			

6.4 Heat Treatment

6.4.1 All steel castings, except otherwise specified and approved, are to be suitably annealed, normalized, normalized and tempered, or quenched and tempered to refine the grain structure. The temperature of tempering is to be not less than 550°C.

6.4.2 If a steel casting is locally reheated, or any cold work operation is performed after the final heat treatment, a subsequent stress relieving heat treatment is to be required in order to avoid the possibility of harmful residual stresses.

6.4.3 Heat treatment is to be carried out in properly constructed furnaces to comply with the requirements given in 1.4.2 of this Part.

6.5 Mechanical Properties

6.5.1 Mechanical properties and test requirements for carbon steel castings and low temperature steel castings are to comply with the requirements given in Tables XI 6-2, XI 6-3 and XI 6-5.

(a) Tables XI 6-2 and XI 6-3 give the minimum requirements for yield stress (or proof stress at 0.2% non-proportional elongation), elongation and reduction of area corresponding to different strength levels, and it is not intended that these are necessarily to be regarded as specific grades.

(b) Steel castings may be supplied to any specified minimum tensile strength selected within the general limits detailed in Tables XI 6-2 and XI 6-3.

Table XI 6-2
Mechanical Properties for Acceptance Purposes and Test Requirements of Carbon Steel Castings for Ship and Machinery Construction

Material Grade (4)		Tensile Test (1)				No. of Test Specimens
		Specified Minimum Tensile Strength (3) (N/mm^2)	Yield Stress min. (N/mm^2)	Elongation on $L = 5.65\sqrt{A}$ min. (%)	Reduction of Area min. (%)	
Carbon Steel Castings	C1-	400	200	25	40	See Table XI 6-6
		440	220	22	30	
		480	240	20	27	
		520	260	18	25	
		560	300	15	20	
		600	320	13	20	

Notes:

(1) Where it is proposed to use a steel casting with a specified minimum tensile strength intermediate to those given in the above Table, corresponding minimum values for the yield stress, elongation and reduction of area may be obtained by interpolation. In this case, the fractions below 0.5 of the figures are to be disregarded, and the figures of 0.5 and over are to be rounded up.

(2) For steel castings intended to be used for the propellers granted the notation **Ice Class** and for elevated temperature service, the mechanical properties and test requirements are to be specially considered.

(3) The difference in tensile strength in cases where more than one tensile test specimen is taken from a casting is not to exceed 62 N/mm^2.

(4) The material grade is to be denoted as C1- affixed with the figure to represent the minimum tensile strength in N/mm^2 specified on the design document or in the material specification where it is proposed to be used.

Table XI 6-3
Mechanical Properties for Acceptance Purposes and Test Requirements of Carbon Steel Castings for Crank Throws

Material Grade	Tensile Test				Impact Test (2)	No. of Test Specimens
	Specified Minimum Tensile Strength (N/mm^2)	Yield Stress min. (N/mm^2)	Elongation on $L = 5.65\sqrt{A}$ min. (%)	Reduction of Area min. (%)	Absorbed Energy min. (3) Average of 3 Test Specimens (J)	
C1-	410	205	28	45	32 (30)	See Table XI 6-6
	450	225	26	45	28 (27)	
	480	240	24	40	25 (25)	
	520	260	22	40	20 (22)	
	550	275	20	35	18 (20)	

Notes:

(1) Notes 1, 2 and 3 of Table XI 6-2 are also applicable.

(2) The impact test may be either a test specimen of Type N1 or Type N2 as given in Table XI 2-3 at the option of the manufacturer and is to be carried out at ambient temperature.

(3) The specified values of minimum absorbed energy of impact test are required to a test specimen of Type N1. Where a test specimen of Type N2 is taken, the values shown in parentheses are to be applied.

Table XI 6-4
Chemical Composition of Steel Castings for Low Temperature Service

Material Grade	Deoxidation	Chemical Composition (%)						
		C	Si	Mn	P	S	Ni	Mo
C3-LA	Killed and fine grain treated (See Note)	0.30 max.	0.60 max.	1.00 max	0.035 max.	0.035 max.	–	–
C3-LB		0.25 max.		0.50 ~ 0.80			–	0.45 ~ 0.65
C4-LA					0.030 max.	0.030 max.	2.00 ~ 3.00	–
C4-LB		0.15 max.					3.00 ~ 4.00	–

Note: The grain refining elements and residual elements are to comply with the manufacturing specifications approved by the Society.

Table XI 6-5
Mechanical Properties and Requirements of Steel Castings for Low Temperature

Material Grade	Applicable Design Temperature (°C)	Tensile Test				Impact Test		No. of Test specimens
		Tensile Strength (N/mm²)	Yield Stress (N/mm²)	Elongation on $L = 5.65\sqrt{A}$ (%)	Reduction of Area (%)	Test Temperature (°C)	Absorbed Energy (Average of three test specimens) (2) (J)	
C3-LA	–40	450 min.	245 min.	21 min.	35 min.	–45 (1)	27 min.	See Table VI 6-6
C3-LB	–55					–60 (1)		
C4-LA	–65		275 min.			–70	34 min.	
C4-LB	–90					–95		

Notes:

(1) For Grades C3-LA and C3-LB castings intended to be applied in a higher design temperature, the impact test may be carried out at a temperature 5°C below design temperature or –20°C, whichever is the lower.

(2) The specified values of minimum absorbed energy of impact test are required to a test specimen of Type N1 as given in Table XI 2-3.

6.5.2 Test specimens

(a) The test specimens for steel castings are, except as specified in 6.5.2(c) below, to be taken directly from the body of casting or the test samples which are either integrally cast or gated to the casting to be inspected.

(b) The test samples are not to be detached from the casting until the heat treatment of the casting has been completed, and when detached are to be properly identified by the Surveyor.

(c) In case of group castings of similar form and size cast from same charge and heat treated simultaneously in the same furnace, each of test samples may be cast separately, provided the Surveyor is furnished with an affidavit by the manufacturer stating that the test samples were cast from the same charge as the castings represented and that they were heat treated together with the castings.

(d) The test samples are to have a thickness of not less than 30 mm.

6.5.3 Selection of test specimens for steel castings is to comply with the requirements given in Table XI 6-6.

Table XI 6-6
Selection of Test Specimens for Steel Castings

Condition of Castings	Mass of Castings, kg		No. of Test Specimens (1), (2), (3)
Individual castings as heat treated	ω≤ 10000		1 set
	ω> 10000		2 sets
Group castings cast from same charge and heat treated simultaneously	ω≤ 1000	W ≤ 2000	1 set
		W > 2000	2 sets
Group castings of similar form and size cast from same charge and heat treated simultaneously	ω< 500		1 set
Where: ω = Mass of individual casting as heat treated, in kg. W = Total mass of group castings as heat treated, in kg.			

Notes:

(1) One set of test specimens specified in the above Table means:
For steel castings intended for ship and machinery construction: One tensile.
For steel castings intended for crank webs: One tensile and three impacts.
For steel castings intended for low temperature service: One tensile and three impacts.

(2) Where the casting is of complex design, two sets of test specimens are to be taken from well separated locations if deemed necessary by the Surveyor.

(3) Where large castings are made from two or more casts which are not mixed in a ladle prior to pouring, one set of test specimens is required from each test coupon provided corresponding to the number of casts involved. These test coupons are to be integrally cast at locations as widely separated as possible.

6.6 Non-Destructive Examination

6.6.1 Where specified hereinafter, the non-destructive examination is to be carried out before acceptance. All such tests are to be carried out by competent operators using reliable and efficiently maintained equipment. The testing procedures are to be agreed with the Surveyor.

6.6.2 Non-destructive examination is to be carried out by the manufacturer at an appropriate stage of the manufacturing process and the test reports are to be submitted to the Surveyor. Acceptance criteria for non-destructive testing shall be agreed with the Society. For hull castings, IACS Recommendation No. 69 is regarded as an example of an acceptable standard.

6.6.3 The important parts of the following steel castings are to be subjected to ultrasonic examination:

(a) Steel castings intended for stern frame, rudder horn and other important structural members.

(b) Steel castings specified in Table IV 3-4.

6.6.4 The important parts of the following steel castings are to be subjected to magnetic particle test:

(a) Steel castings intended for stern frame, rudder frame and other important structural members.

(b) Turbine castings (also see 2.9.4 of Part IV).

(c) Steel castings specified in Table IV 3-4.

(d) Propellers (Surfaces of the blade root).

6.6.5 In place of the test methods specified above, the Society may accept the application of other nondestructive inspections considered adequate by the Society.

6.6.6 The welding parts of steel castings used for welded construction are to be subjected to nondestructive examination considered adequate by the Society.

6.6.7 The Society may require nondestructive examination by radiographic test, ultrasonic test, magnetic particle test or penetrant test not only for the steel castings specified above, but also if deemed necessary by the Society.

6.7 Repair of Defects

6.7.1 In the event of finding unacceptable defects in a steel casting, the defects may be removed by machining, chipping or grinding, etc. Flame scarfing or arc-air gouging may also be used provided that preheating is employed when necessary and that the surfaces of the resulting depression are subsequently ground smooth.

6.7.2 After removing the defects, adequate non-destructive examinations are to be carried out to ensure that all defects have been removed completely.

6.7.3 Defective castings may, with the Surveyor's approval, be repaired by welding using an approved procedure.

6.7.4 Where steel castings from which defects were removed are used in that condition or after repaired by welding, the employment of repaired castings is to be approved by the Surveyor.

6.7.5 All steel castings are to be suitably preheated prior to welding depending on their chemical composition and the dimensions and positions of the weld repairs.

6.7.6 Welding materials used are to be of an approved type giving a weld deposit with mechanical properties similar and in no way inferior to those of the parent castings. Welding is to be done by qualified welders with adequate supervision.

6.7.7 After repair welding is completed, the castings are to be given the grain refining heat treatment, or a stress relieving heat treatment at a temperature of not less than 550°C. The type of heat treatment required will be dependent on the chemical composition of the casting and the dimensions, positions and nature of the defects. Special consideration may be given to a local stress relieving heat treatment where the repaired area is small and machining of the casting has reached on advanced stage.

6.7.8 On completion of heat treatment, the weld repairs and adjacent metal are to be ground smooth and examined by magnetic particle, or liquid penetrant testing. Ultrasonic or radiographic examination may also be required.

6.7.9 For hull castings, the procedure of removal of defects and weld repairs is to be in accordance with IACS Recommendation No. 69.

6.8 Special Requirements for Crank Throws

6.8.1 In case where it is proposed to use carbon steel castings for semi-built-up crank throws of internal combustion engine, the method of producing combined web and pin castings together with the selection of test specimens are to be approved by the Society.

6.8.2 Except where otherwise specially approved, the mechanical properties of the carbon steel castings intended to be used for crank throws are to comply with the requirements given in Table XI 6-3.

Chapter 7
Iron Castings

7.1 General

7.1.1 This chapter gives the requirements for grey iron castings and spheroidal or nodular iron castings, etc. to be used for important parts of machinery, pressure vessels, piping systems, etc. Such castings are not to be welded.

7.1.2 Iron castings are to be manufactured in compliance with national or appropriate specifications and other recognized standards accepted by the Society.

7.1.3 For iron castings to be used for propellers and crankshafts, full details of the proposed specification and the method of manufacture are to be submitted to the Society for special approval.

7.2 Manufacture

7.2.1 The approval of foundries as detailed in 1.2.1 of this Part for the manufacture of iron castings covered by this chapter is not required.

7.2.2 The chemical composition of iron castings are to comply with the requirements given in 7.1.2 and 7.1.3 of this Part and may be left to the discretion of the manufacturer who is to ensure that the dimensions and mechanical properties of the castings are suitable.

7.2.3 Unless otherwise required by the conditions of approval, iron castings may be supplied in either the as cast or heat treated condition.

7.3 Tests and Inspections

7.3.1 Material Tests

(a) Materials for iron castings intended for the following purposes, are to be tested in the presence of the Surveyor in compliance with the requirements given in 7.1.2 or 7.1.3 of this Part:
   (i) Propellers for ship propulsion.
   (ii) Crankshafts and connecting rods for internal combustion engines and reciprocating compressors.
   (iii) Connecting rod bearing caps of diesel engine having cylinder bore more than 200 mm.
   (iv) Shell of Group-I and -II pressure vessels.
   (v) Pressure cylinders of the steering gear.
   (vi) Cast pipes for Group-I piping systems.
   (vii) Other important components as deemed necessary by the Society.

(b) Materials for iron castings intended for other purposes than given in 7.3.1(a) above unless otherwise specially required, may not be required to be tested in the presence of the Surveyor provided that the manufacturer's test records are found satisfactory by the Surveyor.

(c) Spheroidal or nodular iron castings, intended for use in the material of important components as specified in 7.3.1(a) above, unless specially agreed by the Society, are required to have a specified minimum elongation not less than 12% on a gauge length of $5.65\sqrt{A}$.

(d) The test samples, the size of test specimens and the mechanical test requirements are generally to comply with those given in 7.1.2 or 7.1.3 of this Part, where the gauge length is different from that specially required for elongation in the Rules, the test results are to be converted accordingly.

7.3.2 Each casting is to be subjected for surface inspection and, if required, for nondestructive examinations to ensure that they are of uniform quality, free from blowholes, porous spots or other harmful defects which would affect their proper applications in service.

7.4 Repair of Defects

7.4.1 At the discretion of the Surveyor, small surface blemishes of iron castings may be removed by local grinding.

7.4.2 Subject to the prior approval of the Surveyor, iron castings containing local porosity may be repaired by impregnation with a suitable plastic filler, provided that the extent of the porosity would not adversely affect the strength of the iron casting.

7.4.3 Repairs by welding for iron castings are generally not permitted, but may be considered in special circumstances. In such cases, full details of the proposed repair procedure are to be submitted to the Society for approval prior to the commencement of the repair work.

Chapter 8

Steel Forgings

8.1 Scope

8.1.1 Application

(a) The requirements of this Chapter are applicable to steel forgings intended for hull and machinery applications such as rudder stocks, pintles, propeller shafts, crankshafts, connecting rods, piston rods, gearing, and steel forgings intended for the construction of cargo tanks and process pressure vessels for liquefied gases, including forgings for the piping systems where the design temperature is below 0°C.

(b) Where relevant, the requirements of this Chapter are also applicable to material for forging stock and to rolled bars intended to be machined into components of simple shape.

8.1.2 Service temperature

(a) Ambient temperature service

The requirements from 8.2 to 8.10 of this Chapter are applicable to steel forgings where the design and acceptance tests are related to mechanical properties at ambient temperature.

(b) Low temperature service

For steel forgings intended for low temperature service, the requirements are specified in 8.11 which are supplementary to the requirements of 8.2 to 8.10 of this Chapter.

(c) Other applications

Additional requirements may be necessary especially when the forgings are intended for service elevated temperatures.

8.1.3 Forgings complying with other standards or specifications

Alternatively, forgings which comply with national or proprietary specifications may be accepted provided such specifications give reasonable equivalence to these requirements or are otherwise specially approved or required by the Society.

8.2 Manufacture

8.2.1 Approval

Forgings are to be made at works approved by the Society. Works approval is to be in accordance with the requirements given in 1.2 of this Part.

8.2.2 The steel used in the manufacture of forgings is to be made by a process approved by the Society.

8.2.3 Freedom from piping and harmful segregations

Adequate top and bottom discards are to be made to ensure freedom from piping and harmful segregations in the finished forgings.

8.2.4 Reduction ratio

The plastic deformation is to be such as to ensure soundness, uniformity of structure and satisfactory mechanical properties after heat treatment. The reduction ratio is to be calculated with reference to the average cross-sectional area of the cast material. Where the cast material is initially upset, this reference area may be taken as the average cross-sectional area after this operation. Unless otherwise approved the total reduction ratio is to be at least:

Manufacture Method or Product	Total Reduction Ratio	
	L>D	L≤ D
Made from ingots or from forged blooms or billets	3:1	1.5:1
Made from rolled products	4:1	2:1
Rolled bars	6:1	

Notes:

(1) For forgings made by upsetting, the length after upsetting is to be not more than one-third of the length before upsetting or, in the case of an initial forging reduction of at least 1.5:1, not more than one-half of the length before upsetting.

(2) L and D are the length and diameter respectively of the part of the forging under consideration.

8.2.5 For crankshafts, where grain flow is required in the most favourable direction having regard to the mode of stressing in service, the proposed method of manufacture may require special approval by the Society. In such cases, tests may be required to demonstrate that a satisfactory structure and grain flow are obtained.

8.2.6 Shaping

(a) The shaping of forgings or rolled slabs and billets by flame cutting, scarfing or arc-air gouging is to be undertaken in accordance with recognized good practice and, unless otherwise approved, is to be carried out before the final heat treatment. Preheating is to be employed when necessitated by the composition and/or thickness of the steel.

(b) For certain components, subsequent machining of all flame cut surfaces may be required.

8.2.7 When two or more forgings are joined by welding to form a composite component, the proposed welding procedure specification is to be submitted for approval. Welding procedure qualification tests may be required. Chapter 2 of Part XII of the Rules are to be referred.

8.2.8 Quality of forgings

All forgings are to be free from surface or internal defects which would be prejudicial to their proper application in service.

8.3 Chemical Composition

8.3.1 All forgings are to be made from killed steel and the chemical composition is to be appropriate for the type of steel, dimensions and required mechanical properties of the forgings being manufactured.

8.3.2 The chemical composition of each heat is to be determined by the manufacturer on a sample taken preferably during the pouring of the heat. When multiple heats are tapped into a common ladle, the ladle analysis shall apply.

8.3.3 The chemical composition is to comply with the overall limits given in Table XI 8-1 and Table XI 8-2 or, where applicable, the requirements of the approved specification.

8.3.4 At the option of the manufacturer, suitable grain refining elements such as aluminium, niobium or vanadium may be added. The content of such elements is to be reported.

8.3.5 Elements designated as residual elements in the individual specifications are not to be intentionally added to the steel. The content of such elements is to be reported.

Table XI 8-1
Chemical Composition Limits for Hull Steel Forgings(1)(6)

Steel type	C	Si	Mn	P	S	Cr	Mo	Ni	Cu(4)	Total residuals
C, C-Mn	0.23(2)(3)	0.45	0.30 - 1.50	0.035	0.035	0.30(4)	0.15(4)	0.40(4)	0.30	0.85
Alloy	(5)	0.45	(5)	0.035	0.035	(5)	(5)	(5)	0.30	-

Notes:
(1) Composition in percentage mass by mass maximum unless shown as a range.
(2) The carbon content may be increased above this level provided that the carbon equivalent (C_{eq}) is not more than 0.41%, calculated using the following formula:

$$C_{eq} = C + \frac{Mn}{6} + \frac{Cr + Mo + V}{5} + \frac{Ni + Cu}{15} \quad (\%)$$

(3) The carbon content of C and C-Mn steel forgings not intended for welded construction may be 0.65 maximum.
(4) Elements are considered as residual elements.
(5) Specification is to be submitted for approval.
(6) Rudder stocks and pintles should be of weldable quality.

Table XI 8-2
Chemical Composition Limits for Machinery Steel Forgings(1)

Steel type	C	Si	Mn	P	S	Cr	Mo	Ni	Cu(3)	Total residuals
C, C-Mn	0.65(2)	0.45	0.30 - 1.50	0.035	0.035	0.30(3)	0.15(3)	0.40(3)	0.30	0.85
Alloy(4)	0.45	0.45	0.30 - 1.00	0.035	0.035	Min. 0.40(5)	Min. 0.15(5)	Min. 0.40(5)	0.30	-

Notes:
(1) Composition in percentage mass by mass maximum unless shown as a range or as a minimum.
(2) The carbon content of C and C-Mn steel forgings intended for welded construction is to be 0.23 maximum. The carbon content may be increased above this level provided that the carbon equivalent (C_{eq}) is not more than 0.41%.
(3) Elements are considered as residual elements unless shown as a minimum.
(4) Where alloy steel forgings are intended for welded constructions, the proposed chemical composition is subject to approval by the Society.
(5) One or more of the elements is to comply with the minimum content.

8.4 Heat Treatment, Including Surface Hardening and Straightening

8.4.1 General

At an appropriate stage of manufacture, after completion of all hot working operations, forgings are to be suitably heat treated to refine the grain structure and to obtain the required mechanical properties.

8.4.2 Supply conditions

Except as provided in 8.4.6(b) and 8.4.6(c) forgings are to be supplied in one of the following conditions. For all types of steel the tempering temperature is to be not less than 550°C. Where forgings for gearing are not intended for surface hardening, lower tempering temperature may be allowed.

(a) Carbon and carbon-manganese steels
- Fully annealed
- Normalized
- Normalized and tempered
- Quenched and tempered

(b) Alloy steels
- Quenched and tempered

8.4.3 Alternatively, alloy steel forgings may be supplied in the normalized and tempered condition, in which case the specified mechanical properties are to be agreed with the Society.

8.4.4 Heat treatment furnace

(a) Heat treatment is to be carried out in properly constructed furnaces which are efficiently maintained and have adequate means for control and recording of temperature. The furnace dimensions are to be such as to allow the whole furnace charge to be uniformly heated to the necessary temperature. In the case of very large forgings alternative methods of heat treatment will be specially considered by the Society.

(b) Sufficient thermocouples are to be connected to the furnace charge to measure and record that its temperature is adequately uniform unless the temperature uniformity of the furnace is verified at regular intervals.

8.4.5 If for any reasons a forging is subsequently heated for further hot working, the forging is to be reheat treated.

8.4.6 Surface hardening

(a) Where it is intended to surface harden forgings, full details of the proposed procedure and specification are to be submitted for the approval of the Society. For the purposes of this approval, the manufacture may be required to demonstrate by test that the proposed procedure gives a uniform surface layer of the required hardness and depth and that it does not impair the soundness and properties of the steel.

(b) Where induction hardening or nitriding is to be carried out, forgings are to be heat treated at an appropriate stage to a condition suitable for this subsequent surface hardening.

(c) Where carburizing is to be carried out, forgings are to be heat treated at an appropriate stage (generally either by full annealing or by normalizing and tempering) to a condition suitable for subsequent machining and carburizing.

8.4.7 If a forging is locally reheated or any straightening operation is performed after the final heat treatment consideration is to be given to a subsequent stress relieving heat treatment.

8.4.8 The forge is to maintain records of heat treatment identifying the furnace used, furnace charge, date, temperature and time at temperature. The records are to be presented to the Surveyor on request.

8.5 Mechanical Tests

8.5.1 Test material, sufficient for the required tests and for possible retest purposes, is to be provided with a cross-sectional area of not less than that part of the forging which it represents. This test material is to be integral with each forging except as provided in 8.5.7 and 8.5.10. Where batch testing is permitted according to 8.5.10, the test material

may alternatively be a production part or separately forged. Separately forged test material is to have a reduction ratio similar to that used for the forgings represented.

8.5.2 For the purpose of these requirements a set of tests is to consist of one tensile test specimen and, when required, three Charpy V-notch impact test specimens.

8.5.3 Test specimens are normally to be cut with their axes either mainly parallel (longitudinal test) or mainly tangential (tangential test) to the principal axial direction of each product.

8.5.4 Unless otherwise agreed, the longitudinal axis of test specimens is to be positioned as follows:

(a) for thickness or diameter up to maximum 50 mm, the axis is to be at the mid-thickness or the center of the cross section.

(b) for thickness or diameter greater than 50 mm, the axis is to be at one quarter thickness (mid-radius) or 80 mm, whichever is less, below any heat treated surface.

8.5.5 Except as provided in 8.5.10 the number and direction of tests is to be as follows.

(a) Hull components such as rudder stocks, pintles etc. and general machinery components such as shafting, connecting rods, etc.

One set of tests is to be taken from the end of each forging in a longitudinal direction except that, at the discretion of the manufacture, the alternative directions or positions as shown in Fig. XI 8-1, Fig. XI 8-2 and Fig. XI 8-3 may be used. Where a forging exceeds both 4 tonnes in mass and 3 m in length, one set of tests is to be taken from each end. These limits refer to the 'as forged' mass and length but excluding the test material.

(b) Pinions

Where the finished machined diameter of the toothed portion exceeds 200 mm one set of tests is to be taken from each forging in a tangential direction adjacent to the toothed portion (test position B in Fig. XI 8-4). Where the dimensions preclude the preparation of tests from this position, tests in a tangential direction are to be taken from the end of the journal (test position C in Fig. XI 8-4). If however, the journal diameter is 200 mm or less the tests are to be taken in a longitudinal direction (test position A in Fig. XI 8-4). Where the finished length of the toothed portion exceed 1.25 m, one set of tests is to be taken from each end.

(c) Small pinions

Where the finished diameter of the toothed portion is 200 mm or less one set of tests is to be taken in a longitudinal direction (test position A in Fig. XI 8-4).

(d) Gear wheels

One set of tests is to be taken from each forging in a tangential direction (test position A or B in Fig. XI 8-5).

(e) Gear wheel rims (made by expanding)

One set of tests is to be taken from each forging in a tangential direction (test position A or B in Fig. XI 8-6). Where the finished diameter exceeds 2.5 m or the mass (as heat treated excluding test material) exceeds 3 tonnes, two sets of tests are to be taken from diametrically opposite positions (test positions A and B in Fig. XI 8-6). The mechanical properties for longitudinal test are to be applied.

(f) Pinion sleeves

One set of tests is to be taken from each forging in a tangential direction (test position A or B in Fig. XI 8-7). Where the finished length exceeds 1.25 m one set of tests is to be taken from each end.

(g) Crankwebs

One set of tests is to be taken from each forging in a tangential direction.

(h) Solid open die forged crankshafts

One set of tests is to be taken in a longitudinal direction from the driving shaft end of each forging (test position A in Fig. XI 8-8).

Where the mass (as heat treated but excluding test material) exceeds 3 tonnes, tests in a longitudinal direction are to be taken from each end (test positions A and B in Fig. XI 8-8). Where, however, the crankthrows are formed by machining or flame cutting, the second set of tests is to be taken in a tangential direction from material removed from the crankthrow at the end opposite the driving shaft end (test position C in Fig. XI 8-8).

8.5.6 For closed die crankshaft forgings and crankshaft forgings where the method of manufacture has been specially approved in accordance with 8.2.5, the number and position of test specimens is to be agreed with the Society having regard to the method of manufacture employed.

8.5.7 When a forging is subsequently divided into a number of components, all of which are heat treated together in the same furnace charge, for test purposes this may be regarded as one forging and the number of tests required is to be related to the total length and mass of the original multiple forging.

8.5.8 Except for components which are to be carburized or for hollow forgings where the ends are to be subsequently closed, test material is not to be cut from a forging until all heat treatment has been completed.

8.5.9 Forgings to be carburized

(a) When forgings are to be carburized, sufficient test material is to be provided for both preliminary tests at the forge and for final tests after completion of carburizing. For this purpose duplicate sets of test material are to be taken from positions as detailed in 8.5.5, except that irrespective of the dimensions or mass of the forging, tests are required from one position only and, in the case of forgings with integral journals, are to be cut in a longitudinal direction.

(b) This test material is to be machined to a diameter of D/4 or 60 mm, whichever is less, where D is the finished diameter of the toothed portion.

(c) For preliminary tests at the forge, one set of test material is to be given a blank carburizing and heat treatment cycle simulating that which subsequently will be applied to the forging.

(d) For final acceptance tests, the second set of test material is to be blank carburized and heat treated along with the forgings which they represent.

(e) At the discretion of the forgemaster or gear manufacture test samples of larger cross section may be either carburized or blank carburized, but these are to be machined to the required diameter prior to the final quenching and tempering heat treatment.

(f) Alternative procedures for testing of forgings which are to be carburized may be specially agreed with the Society.

8.5.10 Normalized forgings with mass up to 1,000 kg each and quenched and tempered forgings with mass up to 500 kg each may be batch tested. A batch is to consist of forgings of similar shape and dimensions, made from the same heat of steel, heat treated in the same furnace charge and with a total mass not exceeding 6 tonnes for normalized forgings and 3 tonnes for quenched and tempered forgings, respectively.

8.5.11 A batch testing procedure may also be used for hot rolled bars. A batch is to consist of either:

(a) material from the same rolled ingot or bloom provided that where this is cut into individual lengths, these are all heat treated in the same furnace charge, or

(b) bars of the same diameter and heat, heat treated in the same furnace charge and with a total mass not exceeding 2.5 tonnes.

8.5.12 The preparation of test specimens and the procedures used for mechanical testing are to comply with the relevant requirements of Chapter 2 of this Part. Unless otherwise agreed, all tests are to be carried out in the presence of the Surveyor.

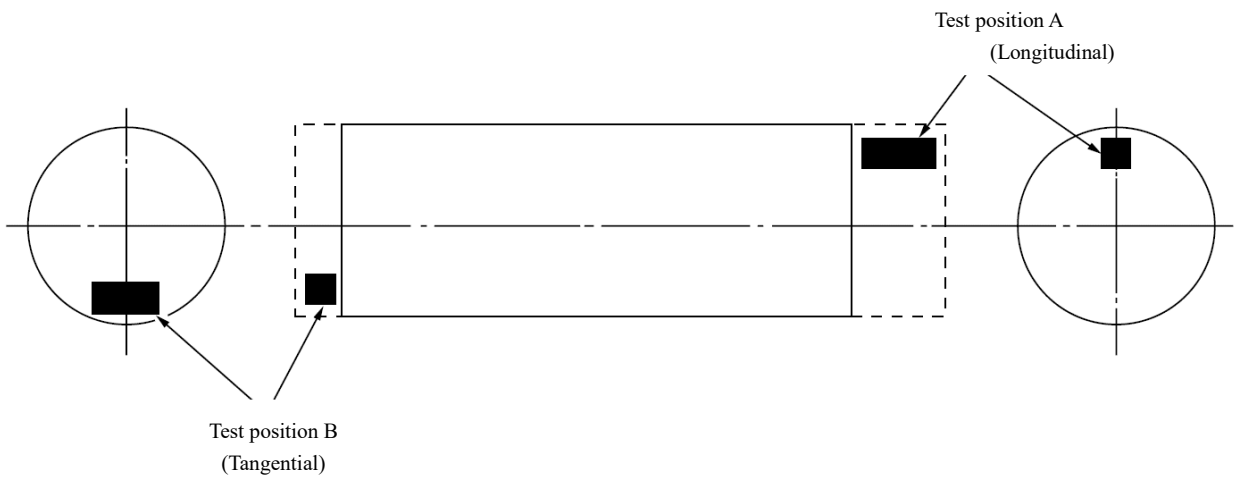

Fig. XI 8-1
Plain Shaft

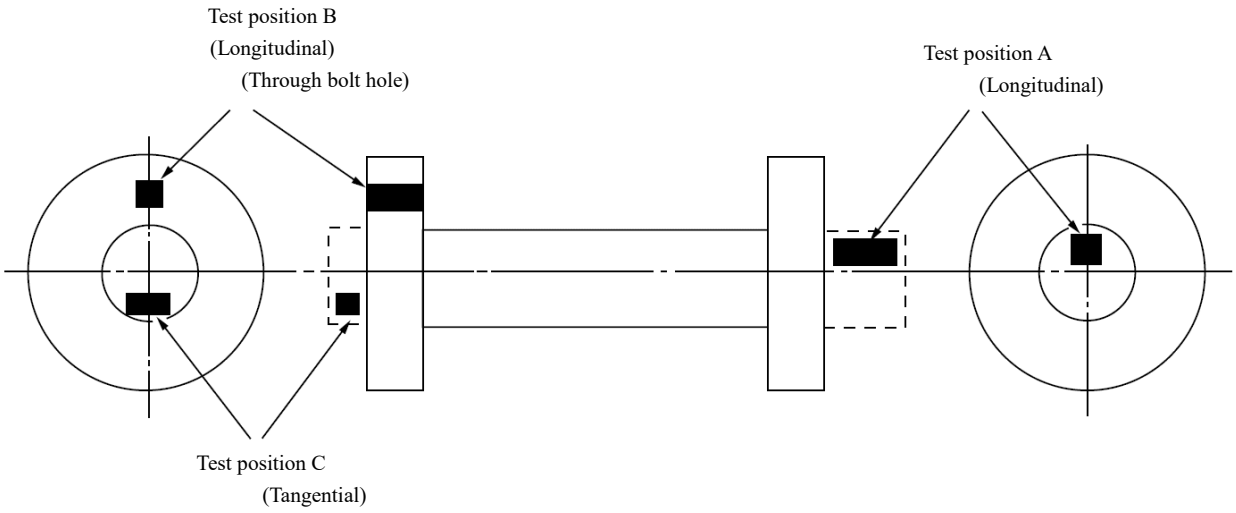

Fig. XI 8-2
Flanged Shaft

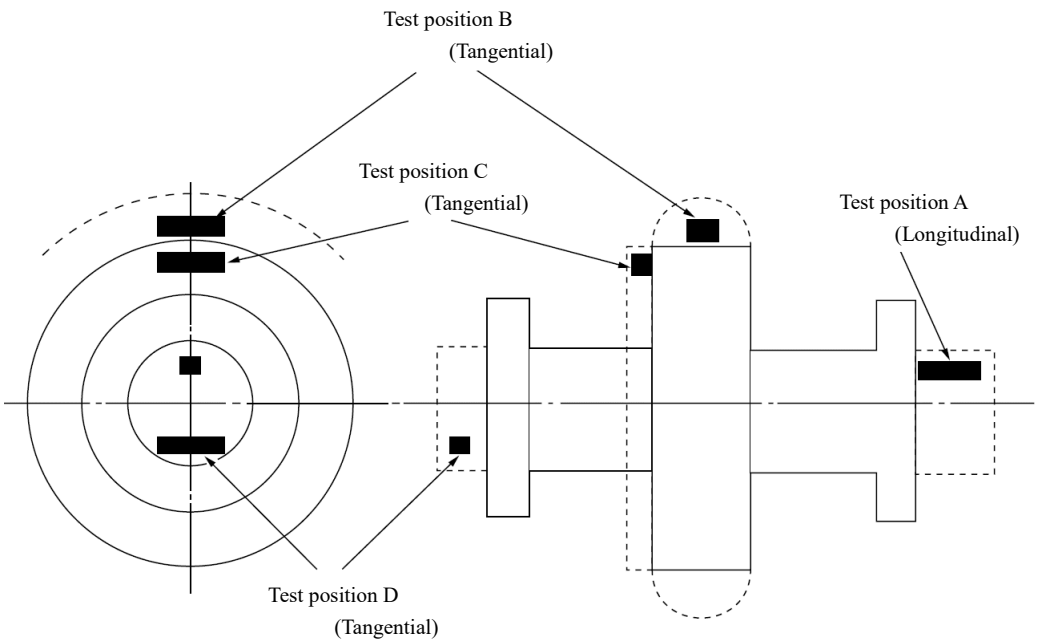

Fig. XI 8-3
Flanged Shaft with Collar

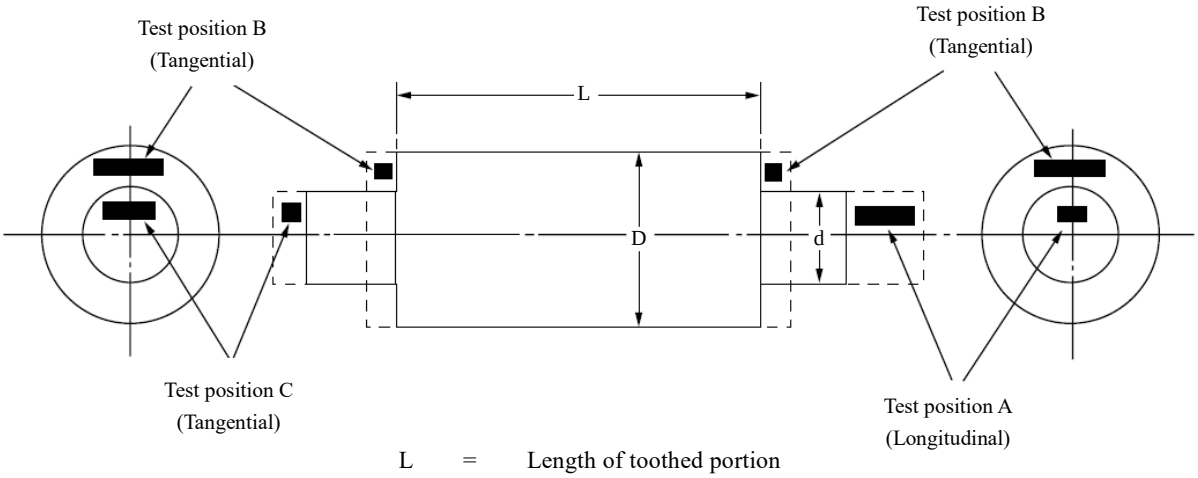

L = Length of toothed portion
D = Diameter of toothed portion
d = Journal diameter

Fig. XI 8-4
Pinion

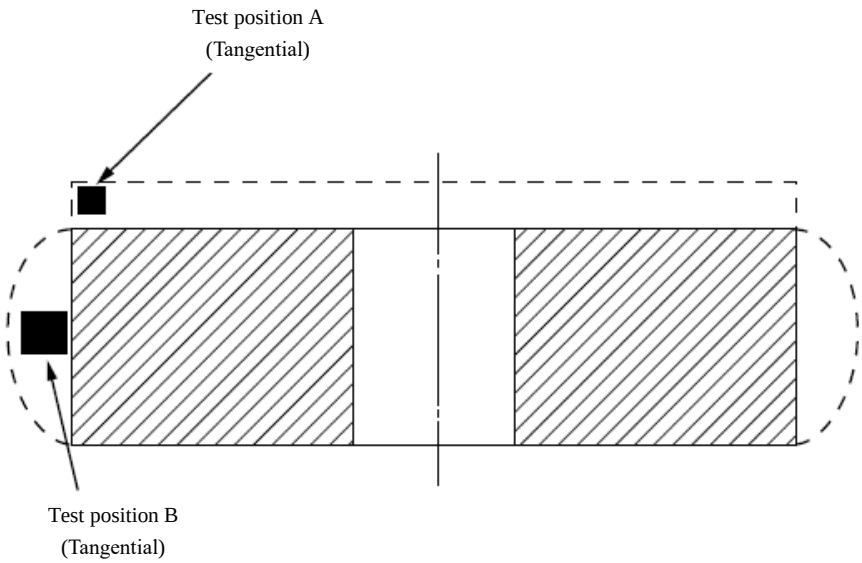

Fig. XI 8-5
Gear Wheel

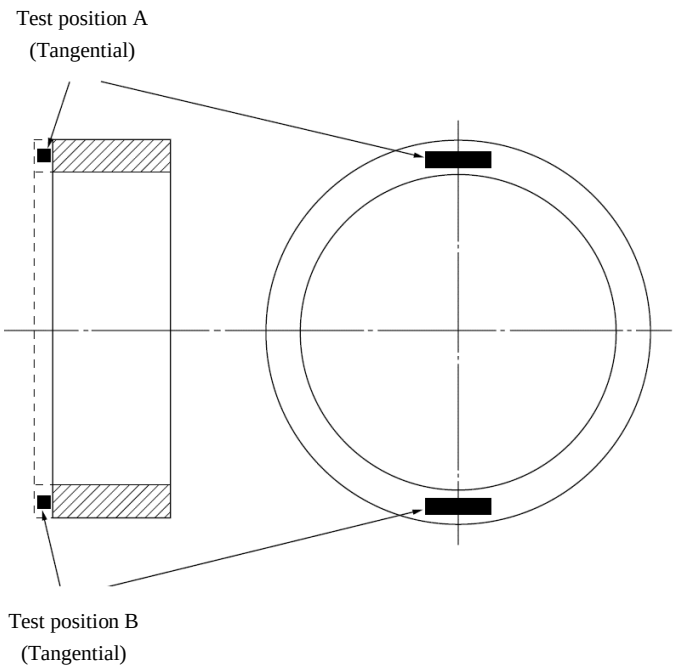

Fig. XI 8-6
Gear Rim (Made by Expanding)

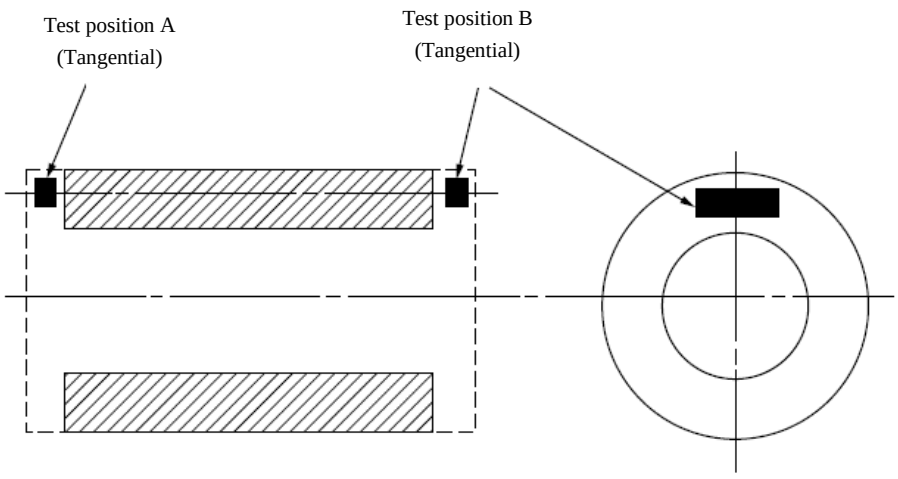

Fig. XI 8-7
Pinion Sleeve

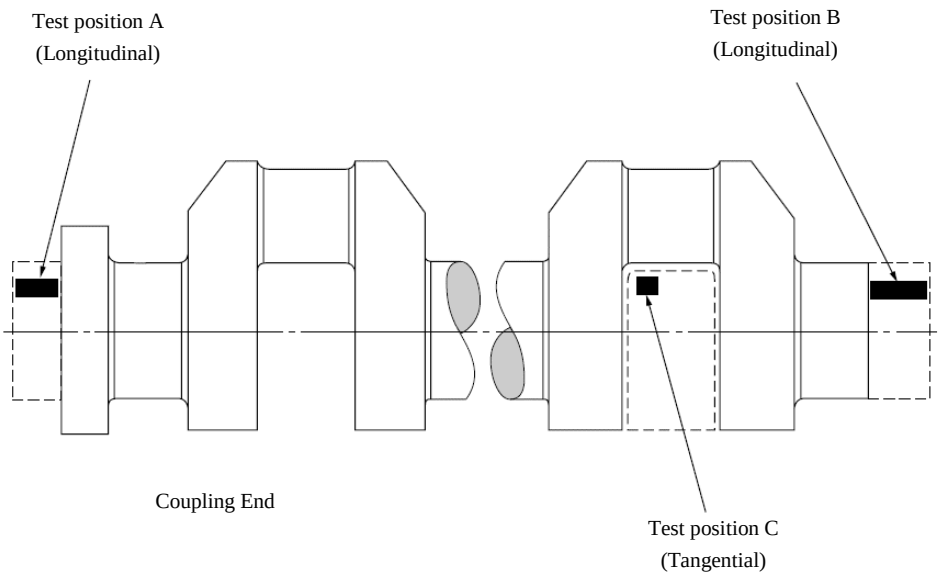

Fig. XI 8-8
Solid Forged Crankshaft

8.6 Mechanical Properties

8.6.1 Table XI 8-3 and Table XI 8-4 give the minimum requirements for yield stress, elongation, reduction of area and impact test energy values corresponding to different strength levels but it is not intended that these should necessarily be regarded as specific grades. Where it is proposed to use a steel with a specified minimum tensile strength intermediate to those given, corresponding minimum values for the other properties may be obtained by interpolation.

8.6.2 Forgings may be supplied to any specified minimum tensile strength selected within the general limits detailed in Table XI 8-3 or Table XI 8-4 but subject to any additional requirements of the relevant construction Rules.

8.6.3 The mechanical properties are to comply with the requirements of Table XI 8-3 or Table XI 8-4 appropriate to the specified minimum tensile strength or, where applicable, the requirements of the approved specification.

8.6.4 At the discretion of the Society hardness tests may be required on the following:

(a) Gear forgings after completion of heat treatment and prior to machining the gear teeth. The hardness is to be determined at four positions equally spaced around the circumference of the surface where teeth will subsequently be cut. Where the finished diameter of the toothed portion exceeds 2.5 m, the above number of test positions is to be increased to eight. Where the width of a gear wheel rim forging exceeds 1.25 m, the hardness is to be determined at eight positions at each end of the forging.

(b) Small crankshaft and gear forgings which have been batch tested. In such cases at least one hardness test is to be carried out on each forging.

The results of hardness tests are to be reported and, for information purposes, typical Brinell hardness values are given in Table XI 8-4.

8.6.5 Hardness tests may also be required on forgings which have been induction hardened, nitrided or carburized. For gear forgings these tests are to be carried out on the teeth after, where applicable, they have been ground to the finished profile. The results of such tests are to comply with the approved specifications (see 8.4.6(a)).

8.6.6 Re-test requirements for tensile tests are to be in accordance with Chapter 2 of this Part.

8.6.7 Re-test requirements for Charpy impact tests are to be in accordance with Chapter 2 of this Part.

8.6.8 The additional tests detailed in 8.6.6 and 8.6.7 are to be taken, preferably from material adjacent to the original tests, but alternatively from another test position or sample representative of the forging or batch of forgings.

8.6.9 At the option of the manufacturer, when a forging or a batch of forgings has failed to meet the test requirements, it may be reheat treated and re-submitted for acceptance tests.

Table XI 8-3
Mechanical Properties for Hull Steel Forgings

Properties / Steel Type	Tensile Strength R_m[(1)] min. (N/mm^2)	Yield Stress R_e min. (N/mm^2)	Elongation A_5 min. (%)		Reduction of area Z min. (%)	
			Long.	Tran.	Long.	Tran.
C and C-Mn	400	200	26	19	50	35
	440	220	24	18	50	35
	480	240	22	16	45	30
	520	260	21	15	45	30
	560	280	20	14	40	27
	600	300	18	13	40	27
Alloy	550	350	20	14	50	35
	600	400	18	13	50	35
	650	450	17	12	50	35

Notes:
(1) The following ranges for tensile strength may be additionally specified:

specified minimum tensile strength:	< 600 N/mm^2	≥ 600 N/mm^2
tensile strength range:	120 N/mm^2	150 N/mm^2

Table XI 8-4
Mechanical Properties for Machinery Steel Forgings(2)

Properties / Steel Type	Tensile Strength R_m(1) min. (N/mm²)	Yield Stress R_e min. (N/mm²)	Elongation A_5 min. (%)		Reduction of area Z min. (%)		Brinell Hardness(3)
			Long.	Tran.	Long.	Tran.	
C and C-Mn	400	200	26	19	50	35	110-150
	440	220	24	18	50	35	125-160
	480	240	22	16	45	30	135-175
	520	260	21	15	45	30	150-185
	560	280	20	14	40	27	160-200
	600	300	18	13	40	27	175-215
	640	320	17	12	40	27	185-230
	680	340	16	12	35	24	200-240
	720	360	15	11	35	24	210-250
	760	380	14	10	35	24	225-265
Alloy	600	360	18	14	50	35	175-215
	700	420	16	12	45	30	205-245
	800	480	14	10	40	27	235-275
	900	630	13	9	40	27	260-320
	1000	700	12	8	35	24	290-365
	1100	770	11	7	35	24	320-385

Notes:

(1) The following ranges for tensile strength may be additionally specified:

specified minimum tensile strength:	< 900 N/mm	≥ 900 N/mm
tensile strength range:	150 N/mm	200 N/mm

(2) For propeller shafts intended for ships with Ice Class notation except the lowest one, Charpy V-notch impact testing is to be carried out for all steel types at –10°C and the average energy value is to be minimum 27 J (longitudinal test). One individual value may be less than the required average value provided that it is not less than 70% of this average value.

(3) The hardness values are typical and are given for information purposes only.

8.7 Inspection

8.7.1 Before acceptance, all forgings are to be presented to the Surveyor for visual examination. Where applicable, this is to include the examination of internal surfaces and bores. Unless otherwise agreed, the verification of dimensions is the responsibility of the manufacturer.

8.7.2 Non-destructive testing

(a) When required by the relevant construction Rules, or by the approved procedure for welded composite components (see 8.2.7), appropriate non-destructive testing is also to be carried out before acceptance and the results are to be reported by the manufacturer.

(b) The extent of testing and acceptance criteria are to be agreed with the Society. IACS Rec. No. 68 is regarded as an example of an acceptable standard.

8.7.3 When required by the conditions of approval for surface hardened forgings (8.4.6(a) refers) additional test samples are to be processed at the same time as the forgings which they represent. These test samples are subsequently to be sectioned in order to determine the hardness, shape and depth of the locally hardened zone and which are to comply with the requirements of the approved specification.

8.7.4 In the event of any forging proving defective during subsequent machining or testing, it is to be rejected notwithstanding any previous certification.

8.8 Rectification of Defective Forgings

8.8.1 Defects may be removed by grinding or chipping and grinding provided the component dimensions are acceptable. The resulting grooves are to have a bottom radius of approximately three times the groove depth and are to be blended into the surrounding surface so as to avoid any sharp contours. Complete elimination of the defective material is to be verified by magnetic particle testing or liquid penetrant testing.

8.8.2 Repair welding of forgings except crankshaft forgings may be permitted subject to prior approval of the Society. In such cases, full details of the extent and location of the repair, the proposed welding procedure, heat treatment and subsequent inspection procedures are to be submitted for the approval.

8.8.3 The forging manufacturer is to maintain records of repairs and subsequent inspections traceable to each forging repaired. The records are to be presented to the Surveyor on request.

8.9 Identification of Forgings

8.9.1 The manufacturer is to adopt a system of identification which will enable all finished forgings to be traced to the original cast and the Surveyor is to be given full facilities for so tracing the forgings when required.

8.9.2 Before acceptance, all forgings which have been tested and inspected with satisfactory results are to be clearly marked by the manufacturer. At the discretion of the Society, any of the following particulars may be required:

(a) Steel quality.

(b) Identification number, cast number or other marking which will enable the full history of the forging to be traced.

(c) Manufacturer's name or trade mark.

(d) The Society's mark ®.

(e) Abbreviated name of the Society's local office.

(f) Personal stamp of Surveyor responsible for inspection.

8.9.3 Where small forgings are manufactured in large numbers, modified arrangements for identification may be specially agreed with the Society.

8.10 Certification

8.10.1 The manufacturer is to provide the required type of inspection certificate giving the following particulars for each forging or batch of forgings which has been accepted:

(a) Purchaser's name and order number.

(b) Description of forgings and steel quality.

(c) Identification number.

(d) Steelmaking process, cast number and chemical analysis of ladle sample.

(e) Results of mechanical tests.

(f) Results of non-destructive tests, where applicable.

(g) Details of heat treatment, including temperature and holding times.

8.11 Ferritic Steel Forgings for Low Temperature Service

8.11.1 Scope

(a) The requirements of this Section apply to ferritic steel forgings intended for use in the construction of cargo tanks and process pressure vessels for liquefied gases, including forgings for the piping systems where the design temperature is below 0°C.

Provision is made for carbon and carbon-manganese steels and alloy steels with specified impact properties at temperatures down to –196°C.

(b) The requirements of this Section are supplementary to the requirements as specified in 8.2 ~ 8.10.

8.11.2 Chemical composition

(a) The chemical composition is to comply with the overall limits given in Table XI 8-5 or, where applicable, the requirements of the approved specification.

(b) Where carbon and carbon-manganese steel is fine grain treated with niobium, vanadium or titanium, either singly or in any combination, the content of Nb shall be within 0.01 to 0.05%, V shall be max. 0.05% and Ti shall be max. 0.02%.

8.11.3 Heat treatment

(a) Carbon and carbon-manganese steel forgings shall be supplied in one of the following conditions:

- Normalized
- Normalized and tempered at a temperature of not less than 550°C
- Quenched and tempered at a temperature of not less than 550°C
- Other delivery conditions may be accepted based on special approval.

(b) Alloy steel forgings shall be normalized and tempered, double normalized and tempered, or quenched and tempered at a temperature of not less than 550°C. Other delivery conditions may be accepted based on special approval.

8.11.4 Mechanical properties

(a) The mechanical properties shall comply with the values given in Table XI 8-6 as below or, where applicable, the requirements of the approved specification.

(b) For forgings which have been batch tested, hardness tests shall be made on each forging.

8.11.5 Inspection

(a) Quenched and tempered forgings are subject to magnetic particle testing (MT), see 8.7.2 of this Chapter.

(b) Normalized forgings with mass 1,000 kg or more and quenched and tempered forgings with mass 500 kg or more are subject to ultrasonic testing (UT).

8.11.6 Pressure testing

Pressure retaining forgings are to be tested after machining to the test pressure required by the relevant design and construction parts of the Rules. No leaks are permitted.

Table XI 8-5
Chemical Composition Limits(1)(2) for Ferritic Steel Forgings for Low Temperature Service

Steel Type and Grade \ Elements		C	Si	Mn	P	S	Cr	Mo	Ni	Cu	Al(3)	Total residuals
C and C-Mn	450	0.16(4)	0.1-0.5	0.7-1.6	0.025	0.025	0.25	0.08	0.8	0.35	0.02	-
	490											
Nickel Alloy	3.5Ni	0.20	0.15-0.35	0.30-0.90	0.025	0.025	0.25	0.08	3.25-3.75	0.35	0.02-0.05	-
	5Ni	0.12							4.70-5.30			
	9Ni	0.10							8.50-10.0			

Notes:
(1) Given value is maximum content (percent, by weight) unless shown as a range or as a minimum
(2) Elements are considered as residual elements unless shown as a range or as a minimum
(3) Aluminium total content. Other grain refining elements may be used for carbon and carbon-manganese steel, see 8.11.2(a)
(4) By special agreement with the Society, the carbon content may be increased to 0.18% maximum, provided the design temperature is not lower than -40°C.

Table XI 8-6
Mechanical Properties for Ferritic Steel Forgings for Low Temperature Service

Steel Type and Grade \ Properties		Tensile Strength R_m min. (N/mm^2)	Yield Stress R_e min. (N/mm^2)	Elongation A_5 min. (%)	Reduction of area Z min. (%)	Charpy V-notch Impact Test	
						Test Temp. (°C)	Min. Aver. Energy (J)
C and C-Mn	450	450-600	240	22	40	-60(1)	41
	490	490-640	275	20			
Nickel Alloy	3.5Ni	490-640	275	20	35	-95(3)	41(2)
	5Ni	540-690	380	20		-110(3)	
	9Ni	640-790	480	18		-196(3)	

Notes:

(1) Applicable for design temperature -55°C or higher. Corresponding to material thickness (t), test temperature may alternatively be:

t ≤ 25 mm	5°C below design temperature or –20°C, whichever is lower
25 mm < t ≤ 30 mm	10°C below design temperature or -20°C, whichever is lower
30 mm < t ≤ 35 mm	15°C below design temperature or -20°C, whichever is lower
35 mm < t ≤ 40 mm	20°C below design temperature
t > 40 mm	Test temperature is to be approved by the Society

(2) Minimum average energy of 34J may be accepted subject to approval by the Society.

(3) The minimum design temperatures may be used as below:

	t ≤ 25 mm	25 mm < t ≤ 40 mm
3.5Ni	-90°C	(t - 115) °C
5Ni	-105°C	(t - 130) °C
9Ni	-165°C	

Special consideration is to be given to the use of thicknesses greater than 40 mm or to the use of design temperatures below –165°C.

Chapter 9
Stainless Steels and Clad Steels

9.1 Stainless Steels

9.1.1 The requirements are to apply to rolled products, castings, forgings and pipes in austenitic stainless steels and austenitic/ferrite duplex stainless steel (hereinafter referred to as duplex stainless steel) intended for use in the construction of tanks, pressure vessels and piping systems in ships for low temperature or corrosion-resisting services. These steels may also be used for the construction of machinery and accepted for elevated temperature service in boilers.

9.1.2 Austenitic stainless steel and duplex stainless steel rolled products, pipes, castings and materials for forging are to be manufactured at works or foundries which have been approved by the Society in compliance with the requirements given in 1.2 of this Part.

9.1.3 Where it is proposed to use alternative stainless steels having characteristics differing from those specified in 9.1.1 above, the proposed specification, giving details of the chemical composition, heat treatment and mechanical properties, is to be submitted for consideration and approval.

9.1.4 Stainless steel pipes are to be manufactured by a seamless, an automatic arc welding or an electric-resistance welding process.

9.1.5 Materials and products of stainless steel are to be of uniform quality and free from harmful defects.

9.1.6 The tolerances for dimensions of rolled products and pipes of stainless steel are to be as deemed appropriate by the Society.

9.1.7 The chemical composition of each grade of austenitic stainless steel and duplex stainless steel are to comply with the requirements given in Table XI 9-1 and Table XI 9-3.

9.1.8 All materials of austenitic stainless steels are to be supplied in the solution treated condition.

9.1.9 The mechanical properties and test requirements for each grade of austenitic stainless steels and duplex stainless steel are to comply with the requirements given in Table XI 9-2 and Table XI 9-4.

9.1.10 A specification giving details of the chemical composition, heat treatment and mechanical properties, including, for each grade of austenitic stainless steels, both the minimum 0.2% and the 1.0% proof stresses, is to be submitted for consideration and approval.

9.1.11 Where deemed necessary by the Society, an intercrystalline corrosion test in accordance with the appropriate standard may be required in addition to the specified tests referred to 9.3.

9.1.12 Low temperature service stainless steels

(a) The austenitic stainless steels are generally applicable for low temperature service with design temperature not to be lower than −165°C. Therefore the duplex stainless steels covered by this section may generally be used for the construction of structural members where the design temperature is 0°C to 300°C.

(b) Where applicable design temperature is below −105°C, the austenitic stainless steel is to be subjected to an additional Charpy V impact test required by (c) below.

(c) One set of 3 impact test specimens is to be taken in the frequency same as those of tensile test required in Table XI 9-2. The test temperature is to be −196°C and the average absorbed energy is not to be less than 41J for test specimens taken longitudinally or 27J for test specimens taken transversely. The impact test specimen for duplex stainless steel is also taken the same as austenitic stainless steel and its test temperature is to be −20°C, the average absorbed energy is not to be less than 41J for test specimens taken longitudinally or 27J for test specimens taken transversely.

9.1.13 Austenitic stainless steels are also suitable for service at elevated temperatures, and for such applications the proposed specification should contain, in addition to the requirements of 9.1.10, minimum values for 0.2% and 1.0% proof stresses at the design temperature.

Table XI 9-1
Chemical Composition of Austenitic Stainless Steels

<table>
<tr><th colspan="2" rowspan="2">Material Grade</th><th colspan="10">Chemical Composition (%)</th></tr>
<tr><th>C max.</th><th>Si max.</th><th>Mn max.</th><th>P max.</th><th>S max.</th><th>Cr</th><th>Mo</th><th>Ni</th><th>N</th><th>Others</th></tr>
<tr><td rowspan="19">Rolled Stainless Steel</td><td>S304</td><td>0.08</td><td rowspan="5">1.00</td><td rowspan="2">2.00</td><td rowspan="17">0.045</td><td rowspan="17">0.030</td><td rowspan="4">18.00~20.00</td><td rowspan="8">—</td><td>8.00~10.50</td><td rowspan="2">—</td><td rowspan="4">—</td></tr>
<tr><td>S304L</td><td>0.03</td><td>9.00~13.00</td></tr>
<tr><td>S304N1</td><td rowspan="2">0.08</td><td rowspan="2">2.50</td><td>7.00~10.50</td><td>0.10~0.25</td></tr>
<tr><td>S304N2</td><td>7.50~10.50</td><td>0.15~0.30</td><td>Nb≤0.15</td></tr>
<tr><td>S304LN</td><td>0.03</td><td rowspan="12">2.00</td><td>17.00~19.00</td><td>8.50~11.50</td><td>0.12~0.22</td><td rowspan="12">—</td></tr>
<tr><td>S309S</td><td rowspan="2">0.08</td><td>22.00~24.00</td><td>12.00~15.00</td><td rowspan="3">—</td></tr>
<tr><td>S310S</td><td>1.50</td><td>24.00~26.00</td><td>19.00~22.00</td></tr>
<tr><td>S316</td><td>0.03</td><td rowspan="9">1.00</td><td rowspan="3">16.00~18.00</td><td rowspan="4">2.00~3.00</td><td>10.00~14.00</td></tr>
<tr><td>S316L</td><td>0.03</td><td>10.00~14.00</td></tr>
<tr><td>S316N</td><td>0.08</td><td>10.00~14.00</td><td>0.10~0.22</td></tr>
<tr><td>S316LN</td><td>0.03</td><td>16.50~18.50</td><td>10.50~14.50</td><td>0.12~0.22</td></tr>
<tr><td>S317</td><td>0.08</td><td rowspan="3">18.00~20.00</td><td rowspan="3">3.00~4.00</td><td rowspan="3">11.00~15.00</td><td rowspan="2"></td></tr>
<tr><td>S317L</td><td>0.03</td></tr>
<tr><td>S317LN</td><td>0.03</td><td>0.10~0.22</td></tr>
<tr><td>S321</td><td rowspan="2">0.08</td><td>17.00~19.00</td><td>—</td><td>9.00 ~13.00</td><td rowspan="2">—</td><td>Ti ≥5×C</td></tr>
<tr><td>S329J1</td><td>1.50</td><td>0.040</td><td>0.030</td><td>23.00~28.00</td><td>1.00~3.00</td><td>3.00~6.00</td><td rowspan="3">—</td></tr>
<tr><td>S329J3L</td><td rowspan="2">0.03</td><td rowspan="2">1.00</td><td>2.00</td><td rowspan="2">0.040</td><td rowspan="3">0.030</td><td>21.00~24.00</td><td>2.50~3.50</td><td>4.50~6.50</td><td>0.08~0.20</td></tr>
<tr><td>S329J4L</td><td>1.50</td><td>24.00~26.00</td><td>2.50~3.50</td><td>5.50~7.50</td><td>0.08~0.30</td></tr>
<tr><td>S347</td><td>0.08</td><td>2.00</td><td>0.045</td><td>17.00~19.00</td><td>—</td><td>9.00~13.00</td><td>—</td><td>Nb ≥10×C</td></tr>
</table>

Table XI 9-1(continued)
Chemical Composition of Austenitic Stainless Steels

Material		Chemical Composition (%)								
Grade		C max.	Si max.	Mn max.	P max.	S max.	Cr	Mo	Ni	Others
Stainless Steel Castings	S304C	0.08	2.00	2.00	0.040	0.030	18.00 ~ 21.00	–	8.00 ~ 11.00	–
	S304LC	0.03	1.50							
	S316C	0.08					17.00 ~ 20.00	2.00 ~ 3.00	10.00 ~ 14.00	
	S316LC	0.03							12.00 ~ 16.00	
	S321C	0.08	2.00				17.00 ~ 21.00	–	8.00 ~ 12.00	
	S347C						18.00 ~ 21.00		9.00 ~ 12.00	Nb + Ta ≥10×C Nb + Ta ≤ 1.35
Stainless Steel Forgings	S304F	0.08	1.00	2.00	0.040	0.030	18.00 ~ 20.00	–	8.00 ~ 12.00	–
	S304LF	0.03								
	S316F	0.08					16.00 ~ 18.00	2.00 ~ 300	10.00 ~ 14.00	
	S316LF	0.03								
	S321F	0.08					17.00 ~ 19.00	–	9.00 ~ 12.00	Ti ≥5×C
	S347F								9.00 ~ 13.00	Nb + Ta ≥10×C
Stainless Steel Pipes	S304P	0.08	1.00	2.00	0.040	0.030	18.00 ~ 20.00	–	8.00 ~ 11.00	–
	S304LP	0.03							9.00 ~ 13.00	
	S316P	0.08					16.00 ~ 18.00	2.00 ~ 3.00	10.00 ~ 14.00	
	S316LP	0.03							12.00 ~ 16.00	
	S321P	0.08					17.00 ~ 19.00	–	9.00 ~ 13.00	Ti ≥5×C
	S347P									Nb + Ta ≥10×C

Table XI 9-2
Mechanical Properties and Test Requirements of Stainless Steels

Material Grade		Tensile Test			Hardness Test			Other Tests (1)	No. of Test Specimens
		Tensile Strength min. (N/mm^2)	Yield Stress or 0.2% Proof Stress min. (N/mm^2)	Elongation on $L=5.65\sqrt{A}$ min. (%)	Brinell max. (HBN) (6)	Rockwell B max. (HRB) (7), (8)	Vicker max. (HV) (9)		
Rolled Stainless Steels	S304	520	205	40	187	90	200	–	1 set from each steel which is of the same charge and is heat treated simultaneously
	S304L	480	175	40	187	90	200		
	S304N1	550	275	35	217	95	220		
	S304N2	690	345	35	248	100	260		
	S304LN	550	245	40	217	95	220		
	S309S	520	205	40	187	90	200		
	S310S	520	205	40	187	90	200		
	S316	520	205	40	187	90	200		
	S316L	480	175	40	187	90	200		
	S316N	550	275	35	217	95	220		
	S316LN	550	245	40	217	95	220		
	S317	520	205	40	187	90	200		
	S317L	480	175	40	187	90	200		
	S317LN	550	245	40	217	95	220		
	S321	520	205	40	187	90	200		
	S329J1	590	390	18	277	29(1)	292		
	S329J3L	620	450	18	302	32(1)	320		
	S329J4L	620	450	18	302	32(1)	320		
	S347	520	205	40	187	90	200		
	S304	520	205	40	187	90	200		

Table XI 9-2(continued)
Mechanical Properties and Test Requirements of Stainless Steels

Material Grade		Tensile Test			Hardness Test			Other Tests (1)	No. of Test Specimens
		Tensile Strength min. (N/mm^2)	Yield Stress or 0.2% Proof Stress min. (N/mm^2)	Elongation on $L=5.65\sqrt{A}$ min. (%)	Brinell max. (HBN) (6)	Rockwell B max. (HRB) (7), (8)	Vicker max. (HV) (9)		
Stainless Steel Castings	S304C	440	185	26	183	–	–	–	As per the applicable requirements in Table XI 6-6
	S304LC	440	205	26					
	S316C	440	185	26					
	S316LC	390	175	31					
	S321C	390	185	31					
	S347C	440	205	26					
Stainless Steel Forgings	S304F	520	205	37	–	–	–	–	As per the applicable requirements in Table XI 8-5
	S304LF	450	175						
	S316F	520	205						
	S316LF	450	175						
	S321F	520	205						
	S347F	520	205						
Stainless Steel Pipes	S304P	520	205	26 (22) (2)	–	–	–	(3), (4)	(5)
	S304LP	480	175						
	S316P	520	205						
	S316LP	480	175						
	S321P	520	205						
	S347P	520	205						

Notes:

(1) Where the stainless steels are intended for low temperature service with design temperature lower than −105°C, additional impact test in compliance with 9.1.12 of this Part is required.

(2) Where the nominal diameter of stainless steel pipes is 200 mm and over, tensile test specimens may be taken transversely and the value of elongation in parentheses is applicable.

(3) Flattening tests of stainless steel pipes are to be required and e = 0.09 is to be applied to formula in 2.5.2 of this Part.

(4) All stainless steel pipes are to be subjected to hydraulic test in accordance with the applicable requirements in 5.5 of this Part.

(5) One sampling pipe is to be selected from each lot of 50 lengths or fraction thereof in same charge, same size and same heat. Each one of the tensile and flattening test specimens is to be taken from each of the sampling tubes.

(6) HBN, Brinell Hardness Number

(7) HRB, Rockwell Hardness measured on the B scale.
Hardness Rockwell total has nine kinds of staff gauge from A to G.

(8) Rockwell hardness of S329J1、S329J3L and S329J4L is to C scale value (HRC).

(9) HV, Vickers-Hardness

Table XI 9-3
Chemical Composition of Duplex Stainless Steels

Material Grade (Rolled Stainless steels)	Chemical Composition (%)								
	C	Si	Mn	P	S	Cr	Mo	Ni	Other elements
S329J1	0.08 max.	1.00 max.	1.50 max.	0.040 max.	0.03 max.	23.00~28.00	1.00~3.00	3.00~6.00	---
S329J3L	0.03 max.	1.00 max.	2.00 max.	0.040 max.	0.03 max.	21.00~24.00	2.50~3.50	4.50~6.50	---
S329J4L	0.03 max.	1.00 max.	1.50 max.	0.040 max.	0.03 max.	24.00~26.00	2.50~3.50	5.50~7.50	---

Table XI 9-4
Mechanical Properties and Test Requirements of Duplex Stainless Steels

Material Grade (Rolled Stainless steels)	Tensile Test			Hardness Test			No. of Test Specimens
	Tensile Strength min (N/mm^2)	Yield Stress or 0.2% Proof Stress min. (N/mm^2)	Elongation on $L=5.65\sqrt{A}$ min. (%)	Brinell max. (HBN)	Rockwell C max. (HRC)	Vicker's max. (HV)	
S329J1	590	390	18	277	29	292	1 set from each steel which is of the same charge and is heat treated simultaneously
S329J3L	620	450	18	302	32	320	
S329J4L	620	450	18	302	32	320	

9.2 Stainless Steel Castings for Propellers

9.2.1 General

(a) The requirements of this section are applicable to the manufacture, inspection and repair procedures of cast steel propellers, blades and bosses.

(b) Where the use of alternative alloys is proposed, particulars of chemical composition, mechanical properties and heat treatment are to be submitted for approval.

(c) These requirements may also be used for the repair of propellers damaged in service, subject to prior agreement with the Society.

9.2.2 Manufacture and Foundry Approval

The requirements of manufacture are to be in accordance with 1.2 of this Part, where applicable.

(a) All propellers, blades and bosses are to be manufactured by foundries approved by the Society. The castings are to be manufactured and tested in accordance with the requirements of the Rules.

(b) Application for approval

It is the manufacturer's responsibility to assure that effective quality, process and production controls during manufacturing are adhered to within the manufacturing specification. The manufacturing specification shall be submitted to the Society at the time of initial approval, and shall at least include the following particulars: description of the foundry facilities, steel material specification, runner and feeder arrangements, manufacturing procedures, non-destructive testing and repair procedures.

(c) Scope of the approval test

The scope of the approval test is to be agreed with the Society. This should include the presentation of cast test coupons of the propeller materials in question for approval testing in order to verify that the chemical composition and the mechanical properties of these materials comply with the Rules.

(d) Inspection facilities

The foundry is to have an adequately equipped laboratory, manned by experienced personnel, for the testing of moulding materials chemical analyses, mechanical testing, microstructural testing of metallic materials and non-destructive testing. Where testing activities are assigned to other companies or other laboratory, additional information required by the Society is to be included.

9.2.3 Quality of castings

(a) Freedom from defects

All castings are to have a workmanlike finish and are to be free from imperfections defects which would be prejudicial to their proper application in service. Minor casting defects which may still be visible after machining such as small sand and slag inclusions, small cold shuts and scabs shall be trimmed off by the manufacturer in accordance with 9.2.12 of this chapter.

(b) Removal of defects

Casting defects which may impair the serviceability of the castings, e.g. major non-metallic inclusions, shrinkage cavities, blow holes and cracks, are not permitted. They may be removed by one of the methods described in 9.2.12 of this chapter and repaired within the limits and restrictions for the severity zones. Full description and documentation must be available for the Surveyor.

9.2.4 Dimensions, dimensional and geometrical tolerances

(a) The verification of dimensions, the dimensional and geometrical tolerances is the responsibility of the manufacturer. The report on the relevant examinations is to be submitted to the Surveyor, who may require checks to be made in his presence.

(b) Static balancing is to be carried out on all propellers in accordance with the approved drawing. Dynamic balancing may be necessary for propellers running above 500 rpm.

9.2.5 Chemical composition

Typical cast steel propeller alloys are grouped into 4 types depending on their chemical composition as given in Table XI 9-5 below, The chemical composition is to comply with the requirements of Table XI 9-5 or the approved specification, as appropriate.

Table XI 9-5
Typical Chemical Composition for Steel Propeller Castings

Alloy type	C max. (%)	Mn max. (%)	Cr (%)	Mo (1) max. (%)	Ni (%)
Martensitic (12Cr 1Ni)	0.15	2.0	11.5-17.0	0.5	Max. 2.0
Martensitic (13Cr 4Ni)	0.06	2.0	11.5-17.0	1.0	3.5-5.0
Martensitic (16Cr 5Ni)	0.06	2.0	15.0-17.5	1.5	3.5-6.0
Austenitic (19Cr 11Ni)	0.12	1.6	16.0-21.0	4.0	8.0-13.0

Notes:
(1) Minimum values are to be in accordance with recognised national or international standards.

9.2.6 Heat treatment

Martensitic castings are to be austenitized and tempered. Austenitic castings should be solution treated.

9.2.7 Mechanical properties

The mechanical properties are to comply with the values given in Table XI 9-6 below or the approved specification, as appropriate.

Table XI 9-6
Mechanical Properties for Steel Propeller Castings

	Tensile Test				Impact Test
Alloy type	Proof stress $R_{p0.2}$ ($R_{p1.0}$) min. (N/mm^2)	Tensile strength Rm min. (N/mm^2)	Elongation A5 min. (%)	Reduction of area Z min.(%)	Charpy V-notch (1) Energy min.(j)
Martensitic (12Cr 1 Ni)	0.2% 440	590	15	30	20
Martensitic (13Cr 4Ni)	550	750	15	35	30
Martensitic (16Cr 5Ni)	540	760	15	35	30
Austenitic 19Cr 11Ni	180(205) (2)	440	30	40	-

Notes:
(1) Tests to be made at 0°C for general service and at -10°C when intended for ships with ice class notation.
(2) In case where 1.0% proof stress is applied, the proof stress is not less than 205 N/mm^2

9.2.8 Mechanical tests

(a) Where possible, the test coupons attached on blades are to be located in an area between 0.5R to 0.6R, where R is the radius of the propeller.

(b) The test bars are not to be detached from the casting until the final heat treatment has been carried out. Removal is to be by non-thermal procedures.

(c) Separately cast test bars may be used subject to prior approval of the Society. The test bars are to be cast from the same heat as the castings represented and heat treated with the castings represented.

(d) At least one set of mechanical tests is to be made on material representing each casting in accordance with Chapter 2 of Part XI.

(e) As an alternative to 9.2.8(d), where a number of small propellers of about the same size, and less than 1m in diameter, are made from one cast and heat treated in the same furnace charge, a batch testing procedure may be adopted using separately cast test samples of suitable dimensions. At least one set of mechanical tests is to be provided for each multiple of five castings in the batch.

9.2.9 Definition of skew, severity zones

Definition of skew, severity zones as specified in 10.3.6 of this Part, where applicable.

9.2.10 Non-destructive testing

(a) The requirements of visual teting, radiographic and ultrasonic testing as specified in 10.3.7 of this Part, where applicable.

(b) Liquid penetrant testing

Liquid penetrant testing procedure is to be submitted to the Society and is to be in accordance with ISO 3452-1: current edition or a recognized standard. The acceptance criteria are specified in 9.2.11.

For all propellers, separately cast blades and hubs, the surfaces covered by severity Zones A, B and C are to be liquid penetrant tested. Testing of Zone A is to be undertaken in the presence of the Surveyor, whilst testing of Zone B and C may be witnessed by the Surveyor upon his request.

If repairs have been made either by grinding or by welding, the repaired areas are additionally to be subjected to the liquid penetrant testing independent of their location and/or severity Zone. Weld repairs are, independent of their location, always to be assessed according to Zone A.

(c) Magnetic particle testing

Magnetic particle testing may be used in lieu of liquid penetrant testing for examination of martensitic stainless steels castings.

Magnetic particle testing procedure is to be submitted to the Society and is to be in accordance with ISO 9934-1:2016 or a recognized standard.

9.2.11 Acceptance criteria for liquid penetrant testing and magnetic particle testing

Acceptance criteria for liquid penetrant testing as specified in 10.3.8 of this Part, where applicable.

9.2.12 Repair of defects

(a) Defective castings are to be repaired in accordance with the requirements given in 9.2.12(b) to 9.2.12(e) and, where applicable, the requirements of 9.2.3 of this chapter.

(b) In general the repairs are to be carried out by mechanical means, e.g. by grinding, chipping or milling. The resulting grooves are to be blended into the surrounding surface so as to avoid any sharp contours. Complete elimination of the defective material is to be verified by liquid penetrant testing, or magnetic particle testing if applicable.

(c) Weld repairs are to be undertaken only when they are considered to be necessary and have prior approval of the Surveyor.

(d) The excavations are to be suitably shaped to allow good access for welding. The resulting grooves are to be subsequently ground smooth and complete elimination of the defective material is to be verified by liquid penetrant testing. Welds having an area less than 5 cm^2 are to be avoided.

(e) In addition, the requirements of 10.3.9 (c) ~ (f) of this Part in force are to be complied with.

9.2.13 Welding repair procedure

(a) Before welding is started, manufacturer shall submit to the Society a detailed welding procedure specification covering the weld preparation, welding parameters, filler metals, preheating and post weld heat treatment and inspection procedures.

(b) All weld repairs are to be carried out in accordance with qualified procedures, and, by welders who are qualified to a recognized standard. Welding Procedure Qualification Tests are to be carried out in accordance with IACS UR W27 Appendix A and witnessed by the Surveyor. Defects to be repaired by welding are to be ground to sound material according to 9.2.9 of this Part. The welding grooves are to be prepared in such a manner which will allow a good fusion of the groove bottom. The resulting ground areas are to be examined in the presence of the Surveyor by liquid penetrant testing in order to verify the complete elimination of defective material.

(c) Welding is to be done under controlled conditions free from draughts and adverse weather.

(d) Metal arc welding with electrodes or filler wire used in the procedure tests is to be used. The welding consumables are to be stored and handled in accordance with the manufacturers recommendations.

(e) Slag, undercuts and other imperfections are to be removed before depositing the next run.

(f) The martensitic steels are to be furnace re-tempered after weld repair. Subject to prior approval, however, local stress relieving may be considered for minor repairs.

(g) On completion of heat treatment the weld repairs and adjacent material are to be ground smooth. All weld repairs are to be liquid penetrant tested.

9.2.14 Marking

Markings are to be carry out according to the requirements of 10.3.12 of this Part.

9.3 Stainless Clad Steels

9.3.1 General

(a) These requirements are to apply to the rolled carbon steel plates clad with austenitic stainless steels on one or both surfaces intended to be used for the construction of tanks for chemicals with their surrounding fittings and corrosion resisting hull parts.

(b) Rolled steel base metals and rolled stainless steel surface metals are to comply with the requirements given in Chapter 3 and 9.1 of this Part respectively. The manufacture process of clad steel is to be specially approved by the Society.

9.3.2 Mechanical Properties and Tests

(a) The test sample is to be taken from the products in a position complying with the requirements given in 3.5.2 of this Part.

(b) Each test sample subject to the following tests is to be taken from the products clad in same manufacture process by a rate in compliance with both requirements of the base and surface metals given in Chapter 3 and 9.1 of this Part respectively. Each test sample is to be subject to one tensile, three impact and one shear tests.

(c) Tensile Tests

(i) The tensile test specimen of clad steel is to be of Type T2 as specified in Table XI 2-1.

(ii) The minimum tensile strength of the clad steel is not to be less than that derived from the following formula:

$$\frac{t_b \cdot S_b + t_s \cdot S_s}{t_b + t_s} \quad N/mm^2$$

where:

S_b = Specified min. tensile strength of base metal, in N/mm^2.

S_s = Specified min. tensile strength of surface metal, in N/mm^2.

t_b = Thickness of base metal, in mm.

t_s = Thickness of surface metal, in mm.

(iii) The minimum yield stress and elongation of the clad steel are not to be less than the requirements of the base metal given in Chapter 3 of this Part.

(d) Impact tests

The impact test for the base metal of the clad steel is to be carried out in accordance with the requirements of impact test given in Chapter 3 of this Part, for which, the impact test for the base metal is required.

(e) Shear tests

The shear strength between the base metal and the surface metal is to be ascertained by the shear test in accordance with the process given in ASTM A264, JIS G0601 or other recognized standards accepted by the Society. The shear strength is to be not less than 200 N/mm^2.

9.3.3 Ultrasonic examination

(a) Each clad steel product is to be subject to an ultrasonic detecting examination in order to ascertain the soundness of the cladding between the base and the surface metals before acceptance. The examination is to be carried out by competent operators using reliable and efficiently maintained equipment.

(b) The procedure and result of the examination are to fulfill the satisfaction of the Surveyor. In case unacceptable defects are found and repair has been agreed, the repair and retest procedures are to be approved by the Society.

9.3.4 Grading

The grade of the clad steel is designated by combining both grades of the base and surface metals, for example "A + S304L".

9.4 Intercrystalline Corrosion Tests of Stainless Steel

Intercrystalline corrosion tests of stainless steel are mainly used to evaluate basic corrosion-resisting properties of austenitic and duplex stainless steel products. The corrosion test is to be carried out in compliance with standard ASTM A262 Practice E, or other recognized standards.

Chapter 10
Copper and Copper Alloys

10.1 Copper and Copper Alloy Pipes and Tubes

10.1.1 The requirements of this Section are to apply to the copper and copper alloy seamless pipes and tubes intended for use in Groups PV-1 and -2 heat-exchangers, and Class-I and -II piping systems as specified in Parts V and VI of the Rules respectively.

10.1.2 Pipes and tubes are to be manufactured in compliance with the appropriate specifications of the respective country or other recognized standards accepted by the Society.

10.1.3 Irrespective of the requirements given in 1.2.1 of this Part, pipes and tubes manufactured in the works or foundries approved by the recognized Organizations, for which, the recognized standard is applied, are acceptable.

10.1.4 Tests and Inspections

(a) Pipes and tubes are to be free from surface or internal defects which would be prejudicial to their proper application in service, and are to be tested and inspected in the presence of the Surveyor in accordance with the recognized standard or specifications accepted by the Society.

(b) In addition to the requirements of the applicable standard as mentioned above, hydraulic tests for pipes and tubes are also to comply with the requirements given in 5.5 of this Part.

10.1.5 Pipes and tubes, upon satisfactory tests and inspections by the Surveyor, are to be clearly marked and identified and suitably certificated by the manufacturer as given in 1.7 and 1.8 of this Part respectively, where practicable.

10.2 Copper Alloy Castings for Valves, Liners, Bushes and Other Fittings

10.2.1 The requirements of this Section are to apply to copper alloy castings for the manufacture of valves, liners, bushes and other fittings intended for use in the construction of ships, other marine structures, machinery and pressure piping systems as specified in the relevant Parts of the Rules.

10.2.2 Copper alloy casting products are to be manufactured in compliance with the appropriate specifications of the respective country or other recognized standards accepted by the Society.

10.2.3 Irrespective of the requirements given in 1.2.1 of this Part, copper alloy castings manufactured at foundries approved by the recognized Organizations, for which, the recognized standard is applied, are acceptable.

10.2.4 Tests and Inspections

(a) All copper alloy casting products are to be free from surface or internal defects which would be prejudicial to their proper application in service, and are to be tested and inspected in the presence of the Surveyor in accordance with the recognized standard or specifications accepted by the Society.

(b) In addition to the requirements of the applicable standard as mentioned above, hydraulic tests for copper alloy castings are also to comply with the requirements as specified in the relevant Parts of the Rules.

10.2.5 Copper alloy casting products, upon satisfactory tests and inspections by the Surveyor, are to be clearly marked and identified and suitably certificated by the manufacturer as given in 1.7 and 1.8 of this Part respectively, where practicable.

10.3 Copper Alloy Castings for Propellers

10.3.1 General

(a) The requirements of this Section are to apply to copper alloy castings to be used for propellers and propeller blades (hereinafter referred to as propeller castings).

(b) The appropriate requirements of this Section may also be applied to the repair and inspection of propellers which have been damaged during service, at the discretion of the Society.

(c) Where propeller castings having characteristics differing from those specified hereinafter are used, the requirements in 1.1.2 and 1.1.3 of this Part are to be complied with.

10.3.2 Manufacture

(a) Propeller castings are to be manufactured at foundries which have been approved by the Society in compliance with the requirements given in 1.2 of this Part.

(b) The pouring is to be carried out into dried moulds using degassed liquid metal. The pouring is to be controlled to avoid turbulent flow. Special devices and/or procedures are to be used to prevent slag flowing into the mould.

(c) Propeller castings are to be of uniform quality and free from harmful defects, and are to be subjected to test and inspection in the presence of the Surveyor.

(d) Propeller castings are to be subjected to the surface inspection at the final process, and important parts are to be inspected by suitable non-destructive tests such as dye penetrant inspection, etc.

(e) Where serious doubts exist that the castings are not free from internal defects further nondestructive tests, e.g. radiographic and/or ultrasonic tests, are to be carried out upon request of the Surveyor. The acceptance criteria are to be agreed between the manufacturer and the Society in accordance with a recognized standard.

(f) Static balancing is to be carried out on all propellers in accordance with the approved drawing. Dynamic balancing is necessary for propellers running above 500 rpm.

(g) The dimensions, the dimensional and geometrical tolerances and surface roughness are to be in accordance with the approved drawings. The accuracy and verification of the dimensions are the responsibility of the manufacturer, unless otherwise agreed.

(h) The manufacturer is to maintain records of inspections traceable to each casting. These records are to be confirmed by the Surveyor.

10.3.3 Chemical composition

(a) Propeller castings are classified into four grades CU1, CU2, CU3 and CU4 depending on their chemical composition as given in Table XI 10-1.

(b) The chemical compositions which are different from those given above in Table XI 10-1, must be specially approved by the Society.

(c) For Grades CU1 and CU2, the zinc equivalent defined by the following formula is not to exceed a value of 45%:

$$\text{Zinc equivalent (\%)} = 100 - \frac{100 \times \%\text{Cu}}{100 + \text{A}}$$

Where A (%) = Sn + 5Al – 0.5Mn – 0.1Fe – 2.3Ni

(d) For Grades CU1 and CU2, the proportions of alpha and beta phases are to be determined from the cross section of tensile test specimen by the metallographic examination. The proportion of α phase determined from the average of at least five counts is to be not less than 25%, and the β phase is to be kept low, so as to ensure adequate cold ductility and corrosion fatigue resistance.

Table XI 10-1
Chemical Composition of Copper Alloy Castings for Propellers and Propeller Blades

Material Grade		Chemical Composition (%)							
		Cu	Sn	Zn	Pb	Ni	Fe	Al	Mn
Mn Bronze Castings (High tensile brass)	CU1	52 ~ 62	0.1~1.5	35 ~ 40	0.5 max.	1.0 max.	0.5 ~ 2.5	0.5 ~ 3.0	0.5 ~ 4.0
Ni-Mn Bronze Castings (High tensile brass)	CU2	50 ~ 57	1.5 max.	33 ~ 38	0.5 max.	3.0 ~ 8.0	0.5 ~2.5	0.5 ~ 2.0	1.0 ~ 4.0
Ni-Al Bronze Castings	CU3	77 ~ 82	0.1 max.	1.0 max.	0.03 max.	3.0 ~ 6.0	2.0 ~ 6.0	7.0 ~11.0	0.5 ~ 4.0
Mn-Al Bronze Castings	CU4	70 ~ 80	1.0 max.	6.0 max.	0.05 max.	1.5 ~ 3.0	2.0 ~ 5.0	6.5 ~ 9.0	8.0 ~ 20.0

10.3.4 Heat Treatment

(a) Propeller castings may be supplied in as cast or heat treated condition at the manufacturer's option. The heat treatment is to be as deemed appropriate by the Society.

(b) If any welds are made in the propeller casting, subsequent stress relieving heat treatment may be performed to reduce the residual stresses. A specification containing the details of the heat treatment is to be submitted to the Society for approval.

10.3.5 Mechanical properties

(a) Mechanical properties and test requirements for propeller castings are to comply with the requirements given in Table XI 10-2.

(b) Test samples and test specimens

(i) Test samples are to be poured from the same ladle of metal used for the castings. Where more than one ladle of metal is required for casting, one test sample is to be provided for each ladle.

(ii) The test samples are to be of the separately cast keel block type, in accordance with the dimensions given in Fig. XI 10-1 and are to be cast in moulds made from the same type of material as used for the castings.

(iii) The method and procedures for the identification of the test specimens, and the castings they represent, are to be agreed with the Surveyor. The identification marks are to be transferred and maintained during the preparation of test specimens.

(iv) The test specimens and procedures are to be in accordance with Chapter 2 of this Part.

(v) Where the propeller castings are supplied in the heat treated condition, the test samples are to be heat treated together with the castings which they represent.

(vi) For integrally cast test samples, the requirements are to be specially agreed with the Society.

Table XI 10-2
Mechanical Properties of Copper Alloy Castings for Propellers and Propeller Blades

Material Grade	Tensile Strength min.(N/mm^2)	0.2% Proof Stress (See Note). min.(N/mm^2)	Elongation on $L = 5.65\sqrt{A}$ min.(%)	No. of Test Specimens
CU1	440	175	20	One tensile test specimen for each ladle of metal
CU2	440	175	20	
CU3	590	245	16	
CU4	630	275	18	

Note: The values of yield stress at 0.2% non-proportional elongation are to be determined for all keyless type propeller castings. For other types of propeller castings, these values are given for information purposes only and, unless otherwise agreed, are not required to be verified by test.

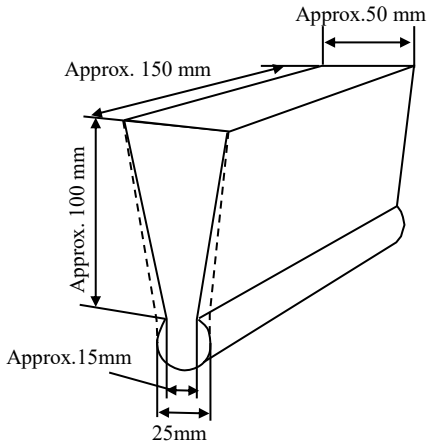

Fig. XI 10-1
Keel Block Type Test Sample

10.3.6 Definition of skew, severity zones

(a) Definition of skew

The skew of a propeller is defined as follows:

The maximum skew angle of a propeller blade is defined as the angle, in projected view of the blade, between a line drawn through the blade tip and the shaft centreline and a second line through the shaft centreline which acts as a tangent to the locus of the mid-points of the helical blade section, see Fig XI 10-2.

High skew propellers have a skew angle greater than 25°, low skew propellers a skew angle of up to 25°.

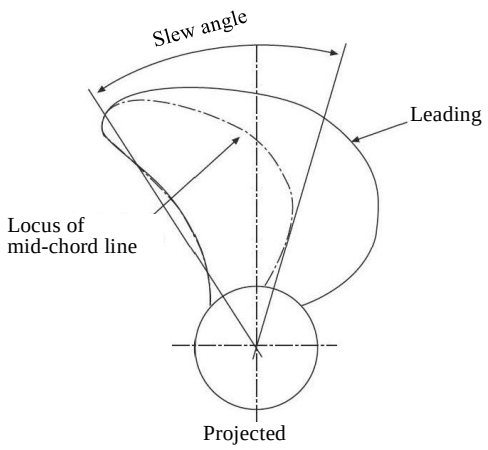

Fig. XI 10-2
Definition of Skew Angle

(b) Severity zones

In order to relate the degree of inspection to the criticality of defects in propeller blades and to help reduce the risk of failure by fatigue cracking after repair, propeller blades are divided into the three severity zones designated A, B and C.

Zone A is the region carrying the highest operating stresses and which, therefore, requires the highest degree of inspection. Generally, the blade thicknesses are greatest in this area giving the greatest degree of restraint in repair welds and this in turn leads to the highest residual stresses in and around any repair welds. High residual tensile stresses frequently lead to fatigue cracking during subsequent service so that relief of these stresses by heat treatment is essential for any welds made in this zone. Welding is generally not permitted in Zone A and will only be allowed after special consideration by the Society. Every effort should be made to rectify a propeller which is either defective or damaged in this area without recourse to welding even to the extent of reducing the scantlings, if this is acceptable. If a repair using welding is agreed, postweld stress relief heat treatment is mandatory.

Zone B is a region where the operation stresses may be high. Welding should preferably be avoided but generally is allowed subject to prior approval from the Society.

Complete details of the defect / damage and the intended repair procedure are to be submitted for each instance in order to obtain such approval.

Zone C is a region in which the operation stresses are low and where the blade thicknesses are relatively small so that repair welding is safer and, if made in accordance with an approved procedure is freely permitted.

(i) Low-skew propellers

Zone A is in the area on the pressure side of the blade, from and including the fillet to 0.4R, and bounded on either side by lines at a distance 0.15 times the chord length C_r from the leading edge and 0.2 times C_r from the trailing edge, respectively (see Fig. XI 10-3). Where the hub radius (R_b) exceeds 0.27R, the other boundary of Zone A is to be increased to $1.5R_b$.

Zone A also includes the parts of the separate cast propeller hub which lie in the area of the windows as described in Fig. XI 10-5 and the flange and fillet area of controllable pitch and built-up propeller blades as described in Fig. XI 10-6.

Zone B is on the pressure side the remaining area up to 0.7R and on the suction side the area from the fillet to 0.7R (see Fig. XI 10-3).

Zone C is the area outside 0.7R on both sides of the blade. It also includes the surface of the hub of a monoblock propeller and all the surfaces of the hub of a controllable pitch propeller other than those designated Zone A above.

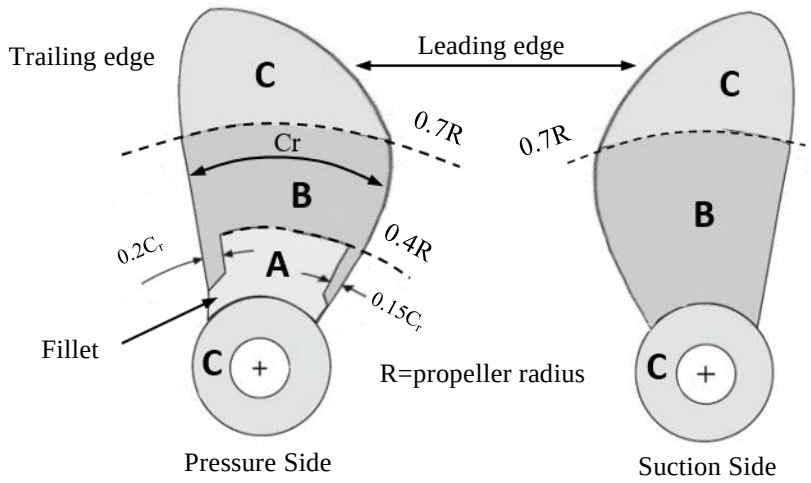

Fig. XI 10-3
Severity Zones for Integrally Cast Low Skew Propellers

(ii) High-skew propellers

Zone A is the area on the pressure face contained within the blade root-fillet and a line running from the junction of the leading edge with the root fillet to the trailing edge at 0.9 R and at passing through the mid-point of the blade chord at 0.7 R and a point situated at 0.3 of the chord length from the leading edge at 0.4 R. It also includes an area along the trailing edge on the suction side of the blade from the root to 0.9 R and with its inner boundary at 0.15 of the chord lengths from the trailing edge. Zone B constitutes the whole of the remaining blade surfaces. Zone A and B are illustrated in Fig. XI 10-4.

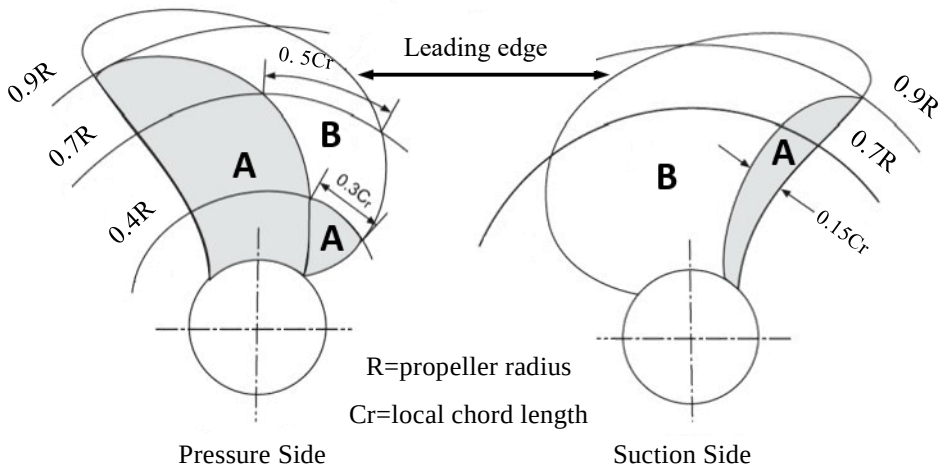

Fig. XI 10-4
Severity Zones in Blades with Skew Angles greater than 25º

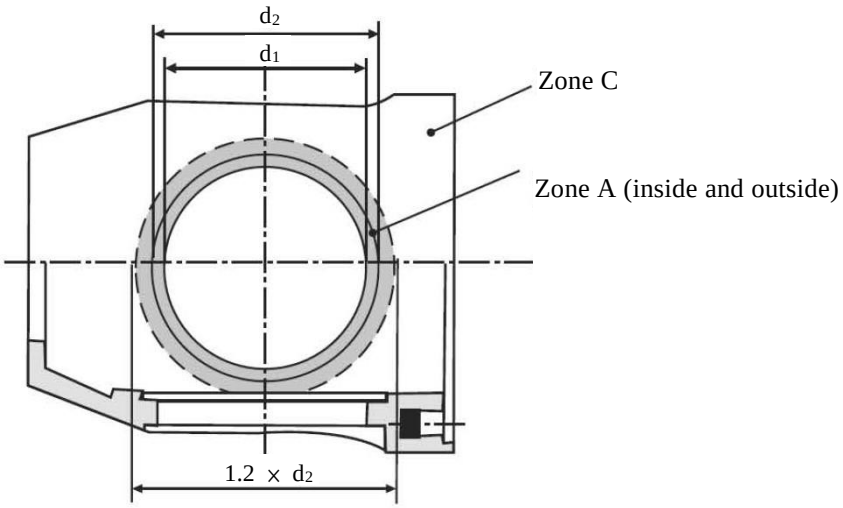

Fig. XI 10-5
Severity Zones for Controllable Pitch Propeller Boss

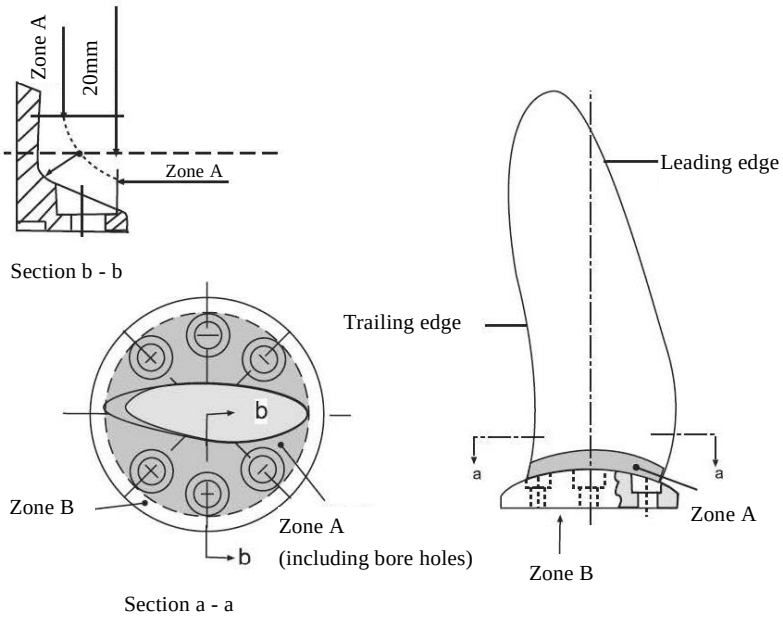

Note: The remaining surface of the propeller blades is to be divided into the severity zones as given for solid cast propellers (refer to Fig. XI 10-3 and Fig. XI 10-4)

Fig. XI 10-6
Severity Zones for Controllable Pitch and Built-up Propeller

10.3.7 Non-destructive testing

(a) Qualification of personnel involved in NDT

Refer to UR W35 Requirements for NDT Suppliers, sections 2.3, 2.4 and 2.5.

(b) Visual testing

All finished castings are to be 100% visually inspected by the manufacturer. Castings are to be free from cracks, hot tears or other imperfections which, due to their nature, degree or extent, will interfere with the use of the castings. A general visual examination is to be carried out by the Surveyor.

(c) Liquid penetrant testing

Liquid penetrant testing procedure is to be submitted to the Society and is to be in accordance with ISO 3452-1:current edition or a recognized standard. The acceptance criteria are specified in 10.3.8.

The severity Zone A is to be subjected to a liquid penetrant testing in the presence of the Surveyor.

In Zones B and C the liquid penetrant testing is to be performed by the manufacturer and may be witnessed by the Surveyor upon his request.

If repairs have been made either by grinding, straightening or by welding the repaired areas are additionally to be subjected to the liquid penetrant testing independent of their location and/or severity zone.

(d) Radiographic and ultrasonic testing

When required by the Society or when deemed necessary by the manufacturer, further nondestructive testing (e.g. radiographic and/or ultrasonic testing) are to be carried out. The acceptance criteria or applied quality levels are to be agreed between the manufacturer and the Society in accordance with a recognized standard.

Note: due to the attenuating effect of ultrasound within cast copper alloys, ultrasonic testing may not be practical in some cases, depending on the shape/type/thickness, and graingrowth direction of the casting.

In such cases, effective ultrasound penetration into the casting should be practically demonstrated on the item. This would normally be determined by way of back-wall reflection, and/or target features within the casting.

10.3.8 Acceptance criteria for liquid penetrant testing

(a) Definitions of liquid penetrant indications

(i) Indication

In the liquid penetrant testing an indication is the presence of detectable bleed-out of the penetrant liquid from the material discontinuities appearing at least 10 minutes after the developer has been applied.

(ii) Relevant indication

Only indications which have any dimension greater than 1.5 mm shall be considered relevant for the categorization of indications.

(iii) Non-linear indication

An indication with a largest dimension less than three times its smallest dimension (i.e. $l < 3$ w).

(iv) Linear indication

An indication with a largest dimension three or more times its smallest dimension (i.e. $l \geq 3$ w).

(v) Aligned indications

(1) Non-linear indications form an alignment when the distance between indications is less than 2mm and at least three indications are aligned. An alignment of indications is considered to be a unique indication and its length is equal to the overall length of the alignment.

(2) Linear indications form an alignment when the distance between two indications is smaller than the length of the longest indication.

(vi) Illustration of liquid penetrant indication is given in Fig. XI 10-7.

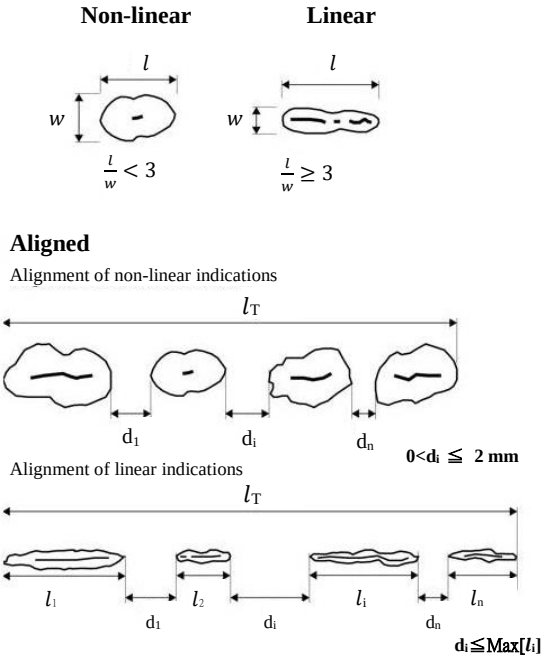

Fig. XI 10-7
Shape of Indications

(b) Acceptance standard

The surface to be inspected is to be divided into reference areas of 100 cm^2. Each reference area may be square or rectangular with the major dimension not exceeding 250 mm.

The area shall be taken in the most unfavourable location relative to the indication being evaluated.

The relevant indications detected shall with respect to their size and number, not exceed the values given in the Table XI 10-3.

Areas which are prepared for welding are independent of their location always to be assessed according to Zone A. The same applies to the welded areas after being finished machined and/or grinded.

Table XI 10-3
Allowable Number and Size of Relevant Indications in a Reference Area of 100 cm², Depending on Severity Zones(1)

Severity zones	Max. total number of indications	Type of indication	Max. number of each type(1) (2)	Max. acceptable value for "a" or "I" of indications [mm]
A	7	Non-linear	5	4
		Linear	2	3
		Aligned	2	3
B	14	Non-linear	10	6
		Linear	4	6
		Aligned	4	6
C	20	Non-linear	14	8
		Linear	6	6
		Aligned	6	6

Notes:

(1) Singular non-linear indications less than 2 mm for Zone A and less than 3 mm for the other zones are not considered relevant. The total number of non-linear indications may be increased to the max.

(2) Total number, or part thereof, represented by the absence of linear or aligned indications.

10.3.9 Repair of defects

(a) Definition

Indications exceeding the acceptance standard of Table XI 10-3, cracks, shrinkage cavities, sand, slag and other non-metallic inclusions, blow holes and other discontinuities which may impair the safe service of the propeller are defined as defects and must be repaired.

(b) Repair procedures

In general the repairs shall be carried out by mechanical means, e. g. by grinding, chipping or milling. Welding may be applied subject to the agreement of the Society if the requirements of 10.3.9(c), (d) and/or (e) below will be complied with.

After milling or chipping grinding is to be applied for such defects which are not to be welded. Grinding is to be carried out in such a manner that the contour of the ground depression is as smooth as possible in order to avoid stress concentrations or to minimise cavitation corrosion. Complete elimination of the defective material is to be verified by liquid penetrant testing.

Welding of areas less than 5 cm^2 is to be avoided.

(c) Repair of defects in Zone A

In Zone A, repair welding will generally not be allowed unless specially approved by the Society.

In some cases the propeller designer may submit technical documentation to propose a modified Zone A based on detailed hydrodynamic load and stress analysis for consideration by the Society.

Grinding may be carried out to an extent which maintains the blade thickness of the approved drawing.

The possible repair of defects which are deeper than those referred to above is to be considered by the Society.

(d) Repair of defects in Zone B

Defects that are not deeper than dB = (t/40) mm (t = min. local thickness in mm according to the Rules) or 2 mm (whichever is greatest) below min. local thickness according to the Rules of the Society should be removed by grinding.

Those defects that are deeper than allowable for removal by grinding may be repaired by welding.

(e) Repair of defects in Zone C

In Zone C, repair welds are generally permitted.

(f) Repair documentation

The foundry is to maintain records of inspections, welding, and any subsequent heat treatment, traceable to each casting.

Before welding is started, full details of the extent and location of the repair, the proposed welding procedure, heat treatment and subsequent inspection procedures are to be submitted to the Society for approval.

10.3.10 Welding repair procedure

See 2.7.2 of Part XII of the Rules.

10.3.11 Straightening

(a) Application of load

For hot and cold straightening purposes, static loading only is to be used.

(b) Hot straightening

Weld repaired areas may be subject to hot straightening, provided it can be demonstrated that weld properties are not impaired by the hot straightening operations.

Straightening of a bent propeller blade or a pitch modification should be carried out after heating the bent region and approximately 500 mm wide zones on either side of it to the suggested temperature range given in Table XII 2-5.

The heating should be slow and uniform and the concentrated flames such as oxy-acetylene and oxy-propane should not be used. Sufficient time should be allowed for the temperature to become fairly uniform through the full thickness of the blade section. The temperature must be maintained within the suggested range throughout the straightening operation. A thermocouple instrument or temperature indicating crayons should be used for measuring the temperature.

(c) Cold straightening

Cold straightening should be used for minor repairs of tips and edges only. Cold straightening on CU 1, CU 2 and CU 4 bronze should always be followed by a stress relieving heat treatment, see Table XII 2-5.

10.3.12 Marking

Each propeller which has satisfactorily complied with the requirements of this Chapter is to be clearly stamped with the following markings:

(a) Name or mark of the manufacturer.

(b) Material grade.

(c) Heat number, casting number or another mark enabling the full history of the casting process to be traced back.

(d) Name or mark of the purchaser, if required.

(e) The Society's mark ® and Surveyor's certificate number and date of final inspection.

(f) Skew angle for high skew propeller.

(g) Ice class Notation, where applicable.

Chapter 11

Aluminium Alloys

11.1 General

11.1.1 The requirements of this Chapter are to apply to aluminium alloy rolled products, extruded products, pipes, tubes and castings intended for use in the construction of hull, machinery, pressure vessel, piping system together with their surrounding fittings in ships.

11.1.2 Aluminium alloys covered in the above requirements of 11.1.1 are to be manufactured at works or foundries which have been approved by the Society in compliance with the requirements given in 1.2.1 of this Part and to be tested and inspected in the presence of Surveyor to the Society.

11.1.3 Rolled and extruded aluminium alloy products are to be manufactured in compliance with the requirements given in 11.2 of this Part or other recognized standards accepted by the Society. Aluminium alloy pipes, tubes and castings are to be manufactured in compliance with the appropriate specifications of the respective country or other recognized standards which have been accepted by the Society in connection with the particular design.

11.2 Rolled and Extruded Aluminium Alloy Products

11.2.1 General requirements

(a) The requirements of this Section apply to rolled sheet, strip, plate and extruded section, shape, bar, closed profile aluminium alloy products within a thickness range of 3 mm and 50 mm inclusive.

(b) Material grades and temper conditions of the rolled and extruded products covered in the requirements are given in Table XI 11-1 to Table XI 11-4 of this Chapter. The numerical material grades are based on those of the Aluminium Association and the temper conditions are defined in the European Standard EN515 or ANSI H35.1.

(c) Where products having thickness range, material grade and temper condition differed from those specified in this section are subjected to prior approval and agreement of the Society.

11.2.2 Chemical composition

(a) The chemical composition is to be determined from each cast, and to comply with the requirements given in Table XI 11-1 of this Chapter.

(b) Special tests such as corrosion resistance test and weldability test or relative details may be required by the Society if considered necessary.

Table XI 11-1
Chemical Composition of Rolled and Extruded Aluminium Alloy Products

Material Grade	Chemical Composition (%) (1)										
	Al	Si	Fe (max.)	Cu	Mn	Mg	Cr	Zn (max.)	Ti (max.)	Others (2)	
										Each (max.)	Total (max.)
5083	Remainder	0.40 max.	0.40	0.10 max.	0.4 ~ 1.0	4.0 ~ 4.9	0.05 ~ 0.25	0.25	0.15	0.05	0.15
5383	Remainder	0.25 max.	0.25	0.20 max.	0.7 ~ 1.0	4.0 ~ 5.2	0.25	0.40	0.15	0.05 (5)	0.15 (5)
5059	Remainder	0.45 max.	0.50	0.25 max.	0.6 ~ 1.2	5.0 ~ 6.0	0.25	0.40~ 0.90	0.20	0.05 (6)	0.15 (6)
5086	Remainder	0.40 max.	0.50	0.10 max.	0.2 ~ 0.7	3.5 ~ 4.5	0.05 ~ 0.25	0.25	0.15	0.05	0.15
5754 (3)	Remainder	0.40 max.	0.40	0.10 max.	0.50 max.	2.6 ~ 3.6	0.30 max.	0.20	0.15	0.05	0.15
5456	Remainder	0.25 max.	0.40	0.10 max.	0.5 ~ 1.0	4.7 ~ 5.5	0.05 ~ 0.20	0.25	0.20	0.05	0.15
6005A (4)	Remainder	0.50 ~ 0.90	0.35	0.30 max.	0.50 max.	0.40 ~ 0.70	0.30 max.	0.20	0.10	0.05	0.15
6061	Remainder	0.40 ~ 0.80	0.70	0.15 ~ 0.40	0.15 max.	0.8 ~ 1.2	0.04 ~ 0.35	0.25	0.15	0.05	0.15
6082	Remainder	0.70 ~ 1.30	0.50	0.10 max.	0.4 ~ 1.0	0.6 ~ 1.2	0.25 max.	0.20	0.10	0.05	0.15

Notes:

(1) Slight deviation to the specified chemical composition of some elements may be agreed by the Society, if considered necessary.

(2) Includes Ni, Ga, V and listed elements for which no specific limit is shown. Regular analysis need not be made.

(3) Mn + Cr: 0.10-0.60

(4) Mn + Cr: 0.12-0.50

(5) Zr: maximum 0.20. The total for other elements does not include Zirconium.

(6) Zr: 0.05-0.25. The total for other elements does not include Zirconium.

11.2.3 Heat treatment and temper conditions

(a) The rolled or extruded aluminium alloy products(5xxx series or 6xxx series) are generally to be heat treated in any of the following temper conditions:

O : Annealed.

H111 : Annealed and slightly processed (e.g. straightening).

H112 : Strain hardened from working at elevated temperatures

H116 : Strain hardened with specified resistance to exfoliation corrosion, where magnesium content exceeds 4%.

H321 : Strain hardened and stabilised.

T5 : Hot worked and artificially aged.

T6 : Solution treated and artificially aged.

(b) The specific heat treatment and temper conditions of aluminium alloy products are given in Tables XI 11-2/3/4.

11.2.4 Mechanical properties

(a) The mechanical properties of rolled products are to comply with the requirements given in Table XI 11-2.

(b) The mechanical properties of extruded products are to comply with the requirements given in Tables XI 11-3 and XI 11-4.

11.2.5 Tensile test

(a) Test specimens for rolled products

The test samples are to be taken at 1/3 of the width from a longitudinal edge in transverse direction, unless the width is insufficient to obtain transverse test specimen, or in case of strain hardening alloys, tests in the longitudinal direction may be permitted. One tensile test specimen is to be cut from each test sample, which is taken from every 2000 kg of the product or fraction thereof in each batch. For single plates or for coils weighting more than 2000 kg each, only one tensile test specimen per plate or coil may be taken.

(b) Test specimens for extruded products

The test samples are to be taken in the range 1/3 to 1/2 of the distance from the edge to the center of the thickest part of the products and to obtain test specimen for testing in longitudinal direction. For the products with a nominal mass of less than 1 kg/m, one tensile test specimen is to be cut from each test sample, which is taken from each 1000 kg, or fraction thereof, in each batch. For nominal mass between 1 and 5 kg/m, one tensile test specimen is to be taken from each 2000 kg, or fraction thereof, in each batch. If the nominal mass exceeds 5 kg/m, one tensile test specimen is to be taken for each 3000 kg of the product or fraction thereof, in each batch.

(c) The test specimens and procedures are to be in accordance with Chapter 2 of this Part.

(d) For products with thickness up to 12.5 mm, T2 type tensile test specimen as specified in Table XI 2-1 is to be used. For thickness exceeding 12.5 mm, T1 type tensile test specimen may be used. Where thickness up to 40 mm, the longitudinal axis of the round specimen is to be located at a distance from the surface equal to half of the thickness. If the thickness exceeds 40 mm, the longitudinal axis is to be located at a distance from one of the surface equal to 1/4 of the thickness.

Table XI 11-2
Mechanical Properties for Rolled Aluminum Alloy Products, 3 mm ≤ t ≤ 50 mm

Material Grade	Temper Condition	Thickness, t mm	0.2% Proof Stress N/mm^2 (min.)	Tensile Strength N/mm^2 (min. or range)	Elongation, % (min.) (1)	
					Elongation on L=50 mm	Elongation on L=5d
5083	O	3 ≤ t ≤ 50	125	275 ~ 350	16	14
	H112	3 ≤ t ≤ 50	125	275	12	10
	H116	3 ≤ t ≤ 50	215	305	10	10
	H321	3 ≤ t ≤ 50	215 ~ 295	305 ~ 385	12	10
5383	O	3 ≤ t ≤ 50	145	290	-	17
	H116	3 ≤ t ≤ 50	220	305	10	10
	H321	3 ≤ t ≤ 50	220	305	10	10
5059	O	3 ≤ t ≤ 50	160	330	-	24
	H116	3 ≤ t ≤ 20	270	370	10	10
		20< t ≤ 50	260	360	10	10
	H321	3 ≤ t ≤ 20	270	370	10	10
		20< t ≤ 50	260	360	10	10
5086	O	3 ≤ t ≤ 50	95	240 ~ 305	16	14
	H112	3 ≤ t ≤ 12.5	125	250	8	-
		12.5< t ≤ 50	105	240	-	9
	H116	3 ≤ t ≤ 50	195	275	10 (2)	9
5754	O	3 ≤ t ≤ 50	80	190 ~ 240	18	17
5456	O	3 ≤t ≤ 6.3	130 ~ 205	290 ~ 365	16	-
		6.3< t ≤ 50	125 ~ 205	285 ~ 360	16	14
	H116	3 ≤ t ≤ 30	230	315	10	10
		30< t ≤ 40	215	305	-	10
		40< t ≤ 50	200	285	-	10
	H321	3 ≤ t ≤ 12.5	230 ~ 315	315 ~ 405	12	-
		12.5< t ≤ 40	215 ~ 305	305 ~ 385	-	10
		40< t ≤ 50	200 ~ 295	285~ 370	-	10

Notes:

(1) Elongation in 50 mm applies for thickness up to 12.5 mm tested by type T2 test specimen as given in Table XI 2-1 with gauge length of 50 mm and in 5d for thickness over 12.5 mm.

(2) 8% for thicknesses up to and including 6.3 mm.

Table XI 11-3
Mechanical Properties for Extruded Aluminum Alloy Products, 3 mm ≤ t ≤ 50 mm

Material Grade	Temper Condition	Thickness, t mm	0.2% Proof Stress N/mm^2 (min.)	Tensile Strength N/mm^2 (min. or range)	Elongation, % (min.) (1), (2)	
					Elongation on L=50 mm	Elongation on L=5d
5083	O	3 ≤ t ≤ 50	110	270 ~ 350	14	12
	H111	3 ≤ t ≤ 50	165	270	12	10
	H112	3 ≤ t ≤ 50	110	270	12	10
5383	O	3 ≤ t ≤ 50	145	290	17	17
	H111	3 ≤ t ≤ 50	145	290	17	17
	H112	3 ≤ t ≤ 50	190	310	-	13
5059	H112	3 ≤ t ≤ 50	200	330	-	10
5086	O	3 ≤ t ≤ 50	95	240 ~ 315	14	12
	H111	3 ≤ t ≤ 50	145	250	12	10
	H112	3 ≤ t ≤ 50	95	240	12	10
6005A	T5	3 ≤ t ≤ 50	215	260	9	8
	T6	3 ≤ t ≤ 10	215	260	8	6
		10< t ≤ 50	200	250	8	6
6061	T6	3 ≤ t ≤ 50	240	260	10	8
6082	T5	3 ≤ t ≤ 50	230	270	8	6
	T6	3 ≤ t ≤ 5	250	290	6	-
		5< t ≤ 50	260	310	10	8

Notes:

(1) The values are applicable for longitudinal and transverse tensile test specimen as well.

(2) Elongation in 50 mm applies for thickness up to 12.5 mm tested by type T2 test specimen as given in Table XI 2-1 with gauge length of 50 mm and in 5d for thickness over 12.5 mm.

Table XI 11-4
Mechanical Properties for Extruded Aluminium Alloy Closed Profiles

Material Grade	Temper Condition	0.2% Proof Stress N/mm^2 (min.)	Tensile Strength N/mm^2 (min.)	Elongation on L = 5 d (%)(min.)
6061	T5 / T6	205	245	4
6005A	T5 / T6	215	250	5
6082	T5 / T6	240	290	5

Note: This table is applicable for testing transverse to extruding direction.

11.2.6 Corrosion testing

(a) Rolled 5xxx-alloys of type 5083, 5383, 5059, 5086 and 5456 in the H116 and H321 tempers intended for use in marine hull construction or in marine applications where frequent direct contact with seawater is expected are to be corrosion tested with respect to exfoliation and inter-granular corrosion resistance.

(b) The manufacturers is to establish the relationship between microstructure and resistance to corrosion when the above alloys are approved. A reference photomicrograph taken at 500x, is to be established for each of the alloy-tempers and thickness ranges relevant. The reference photographs shall be taken from samples which have exhibited no evidence of exfoliation corrosion and a pitting rating of PB or better, when subjected to the test described in ASTM G66 (ASSET).The samples shall also have exhibited resistance to inter-granular corrosion at a mass loss no greater than 15mg/cm^2, when subjected to the test described in ASTM G67. Upon satisfactory establishment of the relationship between microstructure and resistance to corrosion, the master photomicrographs and the results of the corrosion tests are to be approved by the Society. Production practices is not to be changed after approval of the reference micrographs. Other test methods may also be accepted at the discretion of the Society.

(c) For batch acceptance of 5xxx-alloys in the H116 and H321 tempers, metallographic examination of one sample selected from mid width at one end of a coil or random sheet or plate is to be carried out. The microstructure of the sample is to be compared to the reference photomicrograph of acceptable material in the presence of the Surveyor. A longitudinal section perpendicular to the rolled surface shall be prepared for metallographic examination. If the microstructure shows evidence of continuous grain boundary network of aluminium-magnesium precipitate in excess of the reference photomicrographs of acceptable material, the batch is either to be rejected or tested for exfoliation-corrosion resistance and intergranular corrosion resistance subject to the agreement of the Surveyor. The corrosion tests are to be in accordance with ASTM G66 and G67 or equivalent standards. If the results from testing satisfy the acceptance criteria stated in paragraph 11.2.6(b) the batch is accepted, else it is to be rejected.

(d) As an alternative to metallographic examination, each batch may be tested for exfoliation-corrosion resistance and inter-granular corrosion resistance, in accordance with ASTM G66 and G67 or equivalent standards.

(e) Tempers that are corrosion tested in accordance with 11.2.6 are to be marked "M" after the temper condition, e.g. 5083 H321 M.

11.2.7 Drift expansion test

(a) Verification of proper fusion of pressure welds by macro-section tests or drift expansion tests is to be performed on each batch for the extruded closed profiles to ascertain that there is no lack of fusion.

(b) Every fifth profile shall be sampled after final heat treatment.

(c) Batches of five profiles or less shall be sampled one profile.

(d) Profiles with lengths exceeding 6 m shall be sampled every profile in the start of the production. The number of tests may be reduced to every fifth profile if the results from the first 3-5 profiles are found acceptable.

(e) Each profile sampled will have two samples cut from the front and back end of the production profile.

(f) Where verification of fusion at pressure welds of closed profile extrusions is by drift expansion test, testing is to be generally in accordance with 2.6 of this Part. The minimum included angle of the mandrel is to be 60°.

(g) The sample is considered to be unacceptable if the sample fails with a clean split along the weld line, which confirms lack of fusion.

11.2.8 Non-destructive examination

Unless otherwise specially required, the non-destructive examination for the products is generally not required.

11.2.9 Tolerance

The under-thickness tolerances for rolled aluminum alloy products are to comply with those given in Table XI 11-5 of this Chapter. Dimensional tolerances other than those of under-thickness given in the above table are to comply with a recognized national or international standard. The under-thickness tolerances for extruded aluminum alloy products are to be in accordance with the requirements of recognized international or national standards.

Table XI 11-5
Under-thickness Tolerances for Rolled Aluminum Alloy Products

Nominal Thickness(t) (mm)	Thickness Tolerances (mm) w = Nominal Width of Products (mm)		
	w ≤ 1500	1500 < w ≤ 2000	2000 < w ≤ 3500
3 ≤ t < 4	0.10	0.15	0.15
4 ≤ t < 8	0.20	0.20	0.25
8 ≤ t < 12	0.25	0.25	0.25
12 ≤ t < 20	0.35	0.40	0.50
20 ≤ t ≤ 50	0.45	0.50	0.65

11.3 Aluminium/Steel Transition Joints

11.3.1 General requirements

The requirements of this section apply to explosion bonded composite aluminium/steel transition joints used for connecting aluminium structures to steel plating.

11.3.2 Manufacture

(a) Transition joints are to be manufactured at works approved by the Society in accordance with an approved specification which is to include the maximum temperature allowable at the interface during welding.

(b) The aluminium material is to comply with the requirements of 11.2 and the steel is to be of an appropriate grade complying with the requirements of Chapter 3 of this Part.

(c) Intermediate layers between the aluminium and steel may be used, in which case the material of any such layer is to be specified by the manufacturer and is to be recorded in the approval certificate. Any such intermediate layer is then to be used in all production transition joints.

11.3.3 Mechanical properties

(a) Each batch of 3 or less composite plates is to be sampled for mechanical testing on the bond strength. One set of test specimens is to be taken from a sample plate which is any one plate in a batch.

(b) One set of test specimens is to include the following:
   (i) 2 through thickness tensile test specimens taken from each end of the sample plate.
   (ii) 2 shear test specimens taken from each end of the sample plate.
   (iii) One bend test specimen taken from any one end of the sample plate.

(c) Preparation of test specimens
   (i) Through thickness tensile test specimens maybe made across the interface by welding extension pieces to each surface, or by a recognized standard.
   (ii) Shear test specimens may be made in compliance with a recognized standard.

(iii) Bend test specimen may be made in compliance with a recognized standard.

(d) Test methods for the above tests are to comply with recognized standards or the following:

(i) One through thickness tensile test specimen is to be tested at ambient temperature after heating to the maximum allowable interface temperature for 15 minutes. The other one is to be tested without heating treatment.

(ii) One shear test specimens is to be tested at ambient temperature after heating to the maximum allowable interface temperature for 15 minutes. The other one is to be tested without heating treatment.

(iii) Bend tests are to be tested in compliance with a recognized standard.

(e) The test results of all the test specimens are to comply with the requirements of the approved manufacturing specification.

(f) Retest

(i) Where the result of any mechanical test does not comply with the requirements, two additional specimens may be taken from the same plate for retests. If retest results comply with the requirements, the said batch may be accepted.

(ii) If the retests fail, each composite plate of the batch is to be examined. The failure cause is to be investigated and evaluated. Upon this, the Society will consider the extent of composite plate which is to be rejected.

11.3.4 Visual and non-destructive examination

(a) Each composite plate is to be subjected to 100% visual and ultrasonic examination in accordance with a recognized standard accepted by the Society to determine the extent of any unbonded areas.

(b) Unbonded areas are unacceptable and any such area plus 25 mm of surrounding sound material is to be discarded.

Chapter 12
Anchors

12.1 General

12.1.1 This chapter gives the requirements for the stocked and stockless type steel anchors to be equipped on ships in connection with Chapter 25 of Part II.

12.1.2 Anchors are to be of such construction and form of approved design as to meet the mooring purpose.

12.1.3 The anchors other than those specified in 12.1.1 above are to be specially considered by the Society.

12.2 Manufacture and Construction

12.2.1 The anchor head, ring, shank and stock are to be manufactured of cast steels or forged steels as those specified in Chapters 6 and 8 of this Part or such other materials as may be specially approved.

12.2.2 The head pin and ring pin of the anchors are generally to be manufactured of forged steels as those specified in Chapter 8 of this Part.

12.2.3 The mass of the head, including the pin and fittings of a stockless anchor is not to be less than 60% of the total mass of the anchor.

12.2.4 The mass of the stock of a stocked anchor is not to be less than 25% the mass of the anchor excluding the stock.

12.2.5 Anchor rings are to be of an ample strength and a proper design suitable to the service for which the anchor is intended and suitable to the coupled anchor cable.

12.2.6 Where the anchor has a head pin, the flukes are to be free to rotate between stops.

12.2.7 Fabricated anchors are to be manufactured in accordance with approved welding procedures using approved welding materials and carried out by qualified welders.

12.3 Tests and Inspections

12.3.1 All anchors are to be tested and inspected in the presence of the Surveyor of the Society.

12.3.2 Materials.
The materials of anchor are to be tested and inspected in compliance with the requirements given in the related chapters of this Part.

12.3.3 Drop test

(a) Each piece of the cast steel anchor is to be dropped from a height of 4 m to a steel slab on hard ground without fracturing or any defect.

(b) Where the shank and flukes are cast integrally, the anchor is to be firstly made a horizontal drop as specified in 12.3.3(a) above, and then made again with a vertical drop from a height of 4 m to 2 steel blocks on slab arranged so as to shock the middle of each fluke without making the head contact to slab, and is to be found free from any fracture or defect.

12.3.4 Hammering test

After the drop test, each piece of the cast steel anchor is to be slung clear of the ground and well hammered by an ample mass of hammer to test the soundness of the material, and is to be found free from any defect.

12.3.5 Proof test

(a) Proof test is to be carried out on all anchors after being assembled. The test load corresponding to the mass of anchor is to comply with the requirements given in Table XI 12-1.

(b) The proof load is to be applied on the fluke at a position 1/3 of the fluke length, L, from the tip as shown in Fig. XI 12-1.

(c) Where the anchor has a head pin, both flukes are to be tested at the same time, first on one side of the shank, then reversed and tested on the other.

(d) For fixed head type anchors, the flukes on both sides of the shank are to be tested individually.

(e) After proof load testing, the anchors are to be visually inspected to ensure that they are free from cracks or other defects and, unless fixed head type, to be examined to ensure that their heads are free to rotate over the complete angle. In every test the difference between the gauge length (as shown in Fig. XI 12-1) where 1/10 of the required test load was applied first and where the load has been reduced to 1/10 of the required load from the full load may be permitted not to exceed 1% of the gauge length but in no case to exceed 20 mm.

12.3.6 Special requirements for High Holding Power (HHP) and Super High Holding Power (SHHP) anchors:

(a) The High Holding Power (HHP) and Super High Holding Power (SHHP) anchors are to be subjected for prototype approval tests by full scale anchors at sea on various sea bottom conditions in accordance with a procedure approved by the Society to seek that they have a holding power at least twice (for HHP anchor) or four times (for SHHP anchor) than that of an ordinary stockless anchor.

(b) The mass of SHHP anchor is generally not to exceed 1500 kg.

(c) The HHP anchor is to be proof tested with load required by Table XI 12-1 corresponding to a mass equal to 4/3 times the actual mass of the HHP anchor.

(d) The SHHP anchor is to be proof tested with load required by Table XI 12-1 corresponding to a mass equal to 2 times the actual mass of the SHHP anchor.

(e) For SHHP anchors, all cast materials are to be inspected by ultrasonic examination in way of areas where feeder heads and risers have been removed and where weld repairs have been carried out. For fabricated SHHP anchors, ultrasonic or radiographic examination for the welds at sections of high load or suspect areas are required. After proof load testing, all SHHP anchors are to be surface inspected by the dye penetrant or magnetic particle method.

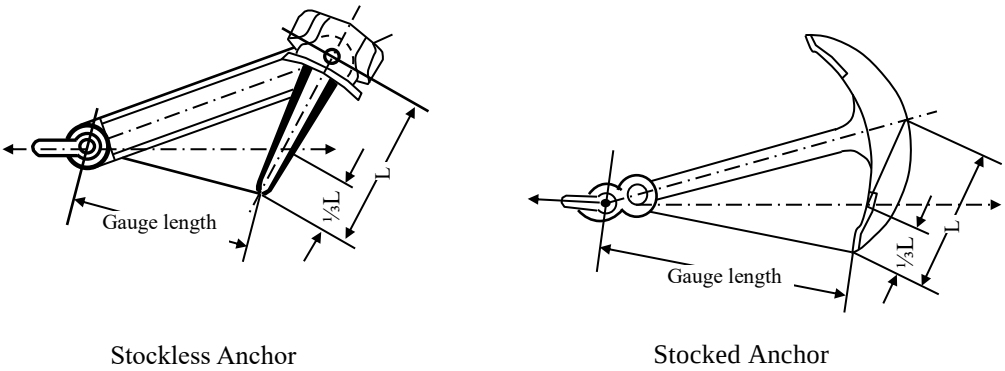

Fig. XI 12-1
Proof Load Application

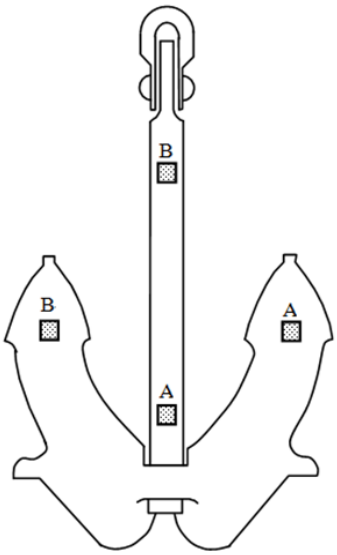

Fig. XI 12-2
Marking Position of Anchor

12.4 Marking

12.4.1 Anchors which have satisfactorily complied with the requirements of the Society are to be clearly stamped with the following markings on one side of the anchor at the position as shown in Fig. XI 12-2.

A: Society's mark ® with filing number assigned by the attending Surveyor.

B: Equipment Numeral as required in Chapter 25 of Part II. In case of the HHP or SHHP anchors, a suffix of "HHP" or "SHHP" respectively is to be added.

12.4.2 In the case of stocked anchor, the marking of A as given in 12.4.1 above is additionally to be stamped on the stock.

Table XI 12-1
Proof Test Load for Anchors

Mass of Anchor (kg)	Proof Load (kN)	Mass of Anchor (kg)	Proof Load (kN)	Mass of Anchor (kg)	Proof Load (kN)	Mass of Anchor (kg)	Proof Load (kN)	Mass of Anchor (kg)	Proof Load (kN)
50	23.2	1000	199	4000	577	8000	877	25000	1770
55	25.2	1050	208	4100	586	8200	892	26000	1800
60	27.1	1100	216	4200	595	8400	908	27000	1850
65	28.9	1150	224	4300	604	8600	922	28000	1900
70	30.7	1200	231	4400	613	8800	936	29000	1940
75	32.4	1250	239	4500	622	9000	949	30000	1990
80	33.9	1300	247	4600	631	9200	961	31000	2030
90	36.3	1350	255	4700	638	9400	975	32000	2070
100	39.1	1400	262	4800	645	9600	987	34000	2160
120	44.3	1450	270	4900	653	9800	998	36000	2250
140	49.0	1500	278	5000	661	10000	1010	38000	2330
160	53.3	1600	292	5100	669	10500	1040	40000	2410
180	57.4	1700	307	5200	677	11000	1070	42000	2490
200	61.3	1800	321	5300	685	11500	1090	44000	2570
225	65.8	1900	335	5400	691	12000	1110	46000	2650
250	70.4	2000	349	5500	699	12500	1130	48000	2730
275	74.9	2100	362	5600	706	13000	1160		
300	79.5	2200	376	5700	713	13500	1180		
325	84.1	2300	388	5800	721	14000	1210		
350	88.8	2400	401	5900	728	14500	1230		
375	93.4	2500	414	6000	735	15000	1260		
400	97.9	2600	427	6100	740	15500	1270		
425	103	2700	438	6200	747	16000	1300		
450	107	2800	450	6300	754	16500	1330		
475	112	2900	462	6400	760	17000	1360		
500	116	3000	474	6500	767	17500	1390		
550	125	3100	484	6600	773	18000	1410		
600	132	3200	495	6700	779	18500	1440		
650	140	3300	506	6800	786	19000	1470		
700	149	3400	517	6900	794	19500	1490		
750	158	3500	528	7000	804	20000	1520		
800	166	3600	537	7200	818	21000	1570		
850	175	3700	547	7400	832	22000	1620		
900	182	3800	557	7600	845	23000	1670		
950	191	3900	567	7800	861	24000	1720		

Notes:

(1) For stocked anchor, mass given in the Table is exclusive of stock.

(2) Proof load for intermediate mass of anchor may be obtained by interpolation.

(3) In case a mass of anchor exceeds 48000 kg, the proof load is to be determined by the following formula:

Proof load $=2.059W^{\frac{2}{3}}$ (kN)

Where:

W = Mass of anchor, in kg.

Chapter 13
Chains

13.1 General

13.1.1 This chapter gives the general requirements of the stud link type chain cables and accessories, manufactured in the process of flash-butt welding by hot rolled steel bars or made of steel forgings and castings, to be used for anchor cables of the ships intended to be classed with a Classification Equipment Symbol "E" and for offshore mooring applications such as mooring of mobile offshore units, floating production units, offshore loading system and gravity based structures during fabrication.

13.1.2 Chain cables and accessories manufactured with materials or by processes other than those specified in this chapter are to be subjected to the special consideration of the Society.

13.1.3 Depending on the strength, the chain cables and accessories as well as their materials are grading as follows:
For anchoring of ship: E1, E2 and E3.
For offshore mooring: R3, R3S and R4.

13.1.4 All materials used for the manufacture of chain cables and accessories are to be supplied by the manufacturer approved by the Society in compliance with the requirements given in 1.2 of this Part.

13.1.5 All grades of chain cables and accessories are to be manufactured by approved procedures at works approved by the Society. The manufacturing process, capability, facilities, heat treatment and non-destructive examination methods, quality control procedures, etc. of which are to fulfill the requirements of the Society.

13.2 Chain Materials

13.2.1 This requirements apply to rolled steels, steel forgings and steel castings used for the manufacture of chain cables and accessories.

13.2.2 All materials are to be of killed steel and, except Grade E1 steel, are to be grain refined. The chemical composition of ladle samples for each grade of steels is to comply with the requirements given in Table XI 13-1.

13.2.3 Unless otherwise specified, the rolled steel bars may be supplied in as rolled condition. However, the Society may require mechanical testing of the bar materials at the steel mill in a heat treatment condition equivalent to that of the finished chain cable.

13.2.4 Forging and casting materials are to be properly heat-treated in compliance with the specifications submitted and approved.

Table XI 13-1
Chemical Composition of Chain Materials

Material Grade	Chemical Composition (%) (1)					
	C(max.)	Si	Mn	P(max.)	S(max.)	Al(min.)
E1	0.20	0.15 ~ 0.35	min. 0.40	0.040	0.040	–
E2	0.24	0.15 ~ 0.55	max. 1.60	0.035	0.035	0.020 (2)
E3	In accordance with an approved specification					
R3						
R3S						
R4 (3)						

Notes:

(1) For Grades E1 and E2 steel forgings and castings, variations in the specified chemical composition may be allowed or required by the Society.

(2) Aluminium may be partly replaced by other grain refining elements.

(3) For Grade R4, the steel is to contain a minimum of 0.20% molybdenum.

13.2.5 The chain materials are to have the mechanical properties tested by the test samples in compliance with the requirements given in Table XI 13-2.

13.2.6 In addition to the test requirements of 13.2.5 above, each heat of Grade R3S and R4 steel bars is to be tested for hydrogen embitterment. In case of continuous casting, test samples representing both the beginning and the end of the charge are to be taken. In case of ingot casting, test samples representing two different ingots are to be taken.

(a) Two tensile test specimens, 20 mm (or 14 mm) in diameter, are to be taken from the center region of bar material which have been simulated heat treated.

(i) One test specimen is to be tested within max. 3 hours (1.5 hours for 14 mm dia.) after machining. (Alternatively, the test specimen may be cooled to –60°C immediately after machining and kept at that temperature for a period of max. 5 days).

(ii) Another test specimen is to be tested after baking at 250°C for 4 hours (2 hours for 14 mm dia.).

(b) A slow strain rate less than $0.0003s^{-1}$ (approximate 10 minutes for a 20 mm dia. specimen) must be used during the entire test, until fracture occurs.

(c) Tensile strength and elongation are to be reported for reference. The reduction of area in the test is required to be:

$Z_1/Z_2 \geq 0.85$

Where:

Z_1 = Reduction of area without baking.

Z_2 = Reduction of area after baking.

(d) Where the test fails to the requirement given in (c) above, a retest may be carried out after the bar material subjected to a hydrogen degassing treatment.

Table XI 13-2
Requirements of Mechanical Properties for Chain Materials and Finished Chains

Grade	Tensile Test (1), (5), (6), (7)				Impact Test (2), (3), (4), (5), (6)		
	Tensile Strength (N/mm²)	Yield Stress min. (N/mm²)	Elongation on $L = 5.65\sqrt{A}$ min. (%)	Reduction of Area min. (%)	Test Temperature (°C)	Absorbed Energy min. (J)	Absorbed Energy (Flash weld) min. (J)
E1	370 ~ 490	–	25	–	–	–	–
E2	490 ~ 690	295	22	–	0	27	–
E3	min. 690	410	17	40	0 (–20)	60 (35)	50 (27)
R3	min. 690	410	17	50	0 (–20)	60 (40)	50 (30)
R3S	min. 770	490	15	50	0 (–20)	65 (45)	53 (33)
R4	min. 860	580	12	50	–20	50	36

Notes:

(1) The ratio of yield stress to tensile strength of Grades R3, R3S and R4 is not to exceed 0.92.

(2) The specified minimum absorbed energy of impact test is required to the average value of three test specimens of Type N1 as given in Table XI 2-3.

(3) The impact test of Grades E3, R3 and R3S may alternatively be carried out by the condition indicated in parentheses.

(4) The impact test for Grade E2 chain materials and finished chains may be waived when the chain cable is to be supplied in heat treated condition.

(5) Mechanical tests for Grade E2 finished chain may be waived provided that the manufacturing process concerned has been specially approved by the Society.

(6) Test sampling for chain materials: (One unit of test specimen including one tensile and three impact specimens)

(a)For rolled bars, one unit of test specimen is to be taken from each batch of 50 tons or fraction thereof in same diameter and same heat.

(b)For forgings and castings, one unit of test specimen is to be taken from the materials of similar dimensions originating from the same heat treatment charge and the same cast.

(c)The test specimens are to be taken from the test sample in the longitudinal direction at a distance of 1/6 diameter from the surface or as close as possible to this position.

(7) The minimum specified Reduction of Area for cast steel may be reduced to 40% for Grades R3 and R3S and reduced to 35% for Grade R4.

13.2.7 Quality Inspections

(a) All materials are to be free from internal and surface defects that might be impair proper workability and use. Surface defects may be repaired by grinding, provided the admissible tolerance is not exceeded.

(b) All rolled bars of Grades R3, R3S and R4 are to be examined by magnetic particle or eddy current methods. They are to be free from injurious surface imperfections such as seams, laps and rolled-in mill scale, provided that their depth is not greater than 1% of the bar diameter, longitudinal discontinuities may be removed by grinding and blending to a smooth contour. The frequency of non-destructive test may be reduced at the discretion of the Society provided it is verified by statistical means that the required quality is consistently achieved.

(c) The forged and cast materials are to be subjected to appropriate non-destructive examinations in compliance with the standard submitted and approved.

(d) Diameter tolerances of Grades E1, E2 and E3 rolled steel bars are to comply with requirements of recognized standards.

(e) Dimensional tolerances of Grades R3, R3S and R4 rolled steel bars are to be within the tolerances specified in the following Table unless otherwise agreed.

Nominal Diameter d (mm)	Tolerances	
	Diameter(mm)	Roundnessd max – dmin(mm)
d ≤ 25	–0, +1.0	0.60
25 < d ≤ 35	–0, +1.2	0.80
35 < d ≤ 50	–0, +1.6	1.10
50 < d ≤ 80	–0, +2.0	1.50
80 < d ≤ 100	–0, +2.6	1.95
100 < d ≤ 120	–0, +3.0	2.25
120 < d ≤ 160	–0, +4.0	3.00

13.2.8 The material of studs are to be of the steel corresponding to that of the chain or in compliance with specifications submitted and approved. Rolled, forged or cast mild steels are also applicable for Grades E1, E2 and E3 chain links. In general, the carbon content is not to exceed 0.25% if the studs are to be welded in place. The use of other materials, e.g. grey or nodular cast iron is not permitted.

13.3 Anchor Chains

13.3.1 The form and proportion of chain links and accessories are to be designed in accordance with a recognized national or international standard. The length of each shot of anchor chain cables is preferably to be 27.5 m. except for the chain directly coupled to anchor. A length of chain cable must comprise an odd number of links.

13.3.2 Heat treatments

(a) Grade E1 flash-butt welded chain cables may be supplied in as-welded or normalized condition.

(b) Grades E2 and E3 flash-butt welded chain cables and all grades of forged and cast chain cables and accessories are to be supplied in normalized, normalized and tempered or quenched and tempered condition in accordance with the approved procedure. However, Grade E2 flash-butt welded chain cables may be supplied in as-welded condition provided that this is specially approved by the Society.

(c) The heat treatment for finished chain cables and accessories is to be carried out prior to the proof loading, breaking and mechanical tests.

13.3.3 Where the studs are required to be welded into the links, the welding is to be completed before heat treatment of chains. The stud ends are to have a good fit inside the link and the weld is to be confined to the end opposite the flash-butt and to be made by qualified welders using approved low-hydrogen welding materials. The welds are to be free from defects liable to impair the proper use of the chains.

13.3.4 Breaking load test for finished chains

(a) Sample lengths comprising at least of 3 links are to be taken from every 4 or less 27.5 m lengths chain cables and subjected to the breaking load test. Where the sample links are produced separately, they are to be made in same manufacturing cycle and in simultaneous heat treatment together with the chain cables concerned.

(b) At least one sample out of each batch of up to 25 chain accessories (one out of 50 for Kenter shackles) is to be taken and subjected to the breaking load test. A batch of accessories is to be of same grade, size and heat treatment charge and to have originated from same charge of material. The samples after test are to be scrapped.

(c) The samples are to withstand the load (or calculated from the formulas given in the following table) given in Table XI 13-3 for the appropriate grade and nominal diameter of chain cables tested by an approved testing machine. The samples are to have no sign of fracture after application of the required test load.

Chain Grade	Formula of Breaking Test Load (kN)
E1	$0.00981d^2$ (44 – 0.08d)
E2	$0.01373d^2$ (44 – 0.08d)
E3	$0.01961d^2$ (44 – 0.08d)
Where d = Nominal diameter of chain in mm.	

(d) If the tensile loading capacity of the testing machine is insufficient to apply the breaking load for chains of large diameter, another equivalent testing method may be accepted subject to the special approval of the Society.

(e) Where a breaking test sample fails, a further test sample may be taken from the same length of chain cable and retested. If this retest fails, the length of chain cable from which the sample was taken is to be rejected. When this test is also representative of other lengths, each of the remaining lengths is to be individually tested by taking a breaking test sample from each length. If one of these further tests fails, the entire set of lengths represented by the original test is to be rejected. For chain cables are retested with satisfactory result, they are to be compensated and may be accepted provided the compensated links are made up in a same manner and have passed an additional breaking load test.

(f) Where a breaking test sample of accessories fails, 2 further test samples may be taken from the same batch and subjected to retest. For acceptance, satisfactory results are to be obtained from both of these retests, otherwise this batch of accessories is to be rejected.

(g) For accessories, the Society may waive the breaking load test provided that:

(i) The breaking load test has been demonstrated satisfactorily on the occasion of approval testing of the same design, and

(ii) The tensile and impact mechanical properties of each manufacturing batch are proven, and

(iii) The accessories are subjected to suitable non-destructive examination.

13.3.5 Proof load test for finished chains

(a) All finished chain cables and accessories are to be subjected to a proof load test (or calculated from the formulas given in the following table) in an approved testing machine and to withstand the load given in Table XI 13-3 for the appropriate grade and nominal diameter of chain cables without significant defects.

Chain Grade	Formula of Proof Test Load (kN)
E1	$0.00686d^2$ (44 – 0.08d)
E2	$0.00981d^2$ (44 – 0.08d)
E3	$0.01373d^2$ (44 – 0.08d)
Where d = Nominal diameter of chain in mm.	

(b) If any link is found to be defective, it is to be replaced by a new one and the chain is to be subjected to a repeat of the proof load test followed by re-examination. However, the number of defective links is more than 5% of the total links in the shot of chain or the retest fails again, the shot of chain is to be rejected.

13.3.6 Mechanical tests for finished chains

(a) For Grade E3, and where required for Grade E2, chain cables, one tensile and 3 impact test specimens are to be taken from the side of a link opposite the flash-butt for every 4 or less 27.5 m lengths cables. A further three impact test specimens are to be taken with the notch located at the center of the weld in case of Grade E3 flash-butt welded chain cables. The test links, from which the mechanical test specimens are prepared, are to be manufactured and heat-treated together with the chain cables concerned, and are not to be selected from the same length as that from which the breaking load test sample is taken unless breaking load test samples are to be taken from every length of the batch.

(b) The mechanical tests are to comply with the requirements given in Table XI 13-2.

13.3.7 Quality and dimensional requirements

(a) All individual parts of chains are to have a clean surface consistent with the method of manufacture and to be free from cracks, notches, inclusions and other defects impairing the performance of the product. The flashes produced by upsetting or drop forging are to be properly removed. Minor surface defects may be ground off so as to leave a gentle transition to the surrounding surface. Remote from the crown local grinding up to 5% of the nominal link diameter may be permitted.

(b) After proof load test, the tolerances for the dimensions of chain links and accessories are to comply with the requirements given in Table XI 13-4.

13.3.8 Marking

The anchor chain cables and accessories, which have been satisfactorily complied with the requirements of the Society, are to be clearly stamped with the following markings at both ends of each length of chain cable and on each individual accessory:

(a) Society mark ® with certificate number assigned by the attending Surveyor.

(b) Equipment numeral as required in Chapter 25 of Part II, affixed H for Grade E2 and HH for Grade E3 of chain cables and accessories.

Table XI 13-3
Breaking and Proof Test Loads for Stud Link Anchor Chains

Nominal Dia. of Chain (mm)	Grade E1		Grade E2		Grade E3	
	Proof Load (kN)	Breaking Load (kN)	Proof Load (kN)	Breaking Load (kN)	Proof Load (kN)	Breaking Load (kN)
11	36	51	51	72	72	102
12.5	46	66	66	92	92	132
14	58	82	82	116	116	165
16	76	107	107	150	150	216
17.5	89	127	127	179	179	256
19	105	150	150	211	211	301
20.5	123	175	175	244	244	349
22	140	200	200	280	280	401
24	167	237	237	332	332	476
26	194	278	278	389	389	556
28	225	321	321	449	449	642
30	257	368	368	514	514	735
32	291	417	417	583	583	833
34	328	468	468	655	655	937
36	366	523	523	732	732	1,050
38	406	581	581	812	812	1,160
40	448	640	640	896	896	1,280
42	492	703	703	981	981	1,400
44	538	769	769	1,080	1,080	1,540
46	585	837	837	1,170	1,170	1,680
48	635	908	908	1,270	1,270	1,810
50	686	981	981	1,370	1,370	1,960
52	739	1,060	1,060	1,480	1,480	2,110
54	794	1,140	1,140	1,590	1,590	2,270
56	851	1,220	1,220	1,710	1,710	2,430
58	909	1,290	1,290	1,810	1,810	2,600
60	969	1,380	1,380	1,940	1,940	2,770
62	1,030	1,470	1,470	2,060	2,060	2,940
64	1,100	1,560	1,560	2,190	2,190	3,130
66	1,160	1,660	1,660	2,310	2,310	3,300
68	1,230	1,750	1,750	2,450	2,450	3,500
70	1,290	1,840	1,840	2,580	2,580	3,690
73	1,390	1,990	1,990	2,790	2,790	3,990
76	1,500	2,150	2,150	3,010	3,010	4,300
78	1,580	2,260	2,260	3,160	3,160	4,500
81	1,690	2,410	2,410	3,380	3,380	4,820
84	1,800	2,580	2,580	3,610	3,610	5,160
87	1,920	2,750	2,750	3,850	3,850	5,500
90	2,050	2,920	2,920	4,090	4,090	5,840
92	2,130	3,040	3,040	4,260	4,260	6,080
95	2,260	3,230	3,230	4,510	4,510	6,440
97	2,340	3,340	3,340	4,680	4,680	6,690
100	2,470	3,530	3,530	4,940	4,940	7,060
102	2,560	3,660	3,660	5,120	5,120	7,320
105	2,700	3,850	3,850	5,390	5,390	7,700
107	2,790	3,980	3,980	5,570	5,570	7,960
111	2,970	4,250	4,250	5,940	5,940	8,480
114	3,110	4,440	4,440	6,230	6,230	8,890
117	3,260	4,650	4,650	6,510	6,510	9,300
120	3,400	4,850	4,850	6,810	6,810	9,720
122	3,500	5,000	5,000	7,000	7,000	9,990
124	3,600	5,140	5,140	7,200	7,200	10,280
127	3,750	5,350	5,350	7,490	7,490	10,710
130	3,900	5,570	5,570	7,800	7,800	11,140
132	4,000	5,720	5,720	8,000	8,000	11,420
137	4,260	6,080	6,080	8,510	8,510	12,160
142	4,520	6,450	6,450	9,030	9,030	12,910
147	4,790	6,840	6,840	9,560	9,560	13,660
152	5,050	7,220	7,220	10,100	10,100	14,430
157	5,320	7,600	7,600	10,640	10,640	15,200
162	5,590	7,990	7,990	11,170	11,170	15,970

Table XI 13-4
Dimensional Tolerances of Stud Link Chains

Chain Links (1)	Diameter at Crown	Nominal Diameter d (mm)		d ≤ 40	40 < d ≤ 84	84 < d ≤ 122	d > 122
		Tolerance	+	0.05d			
			−	1 mm	2 mm	3 mm	4 mm
	Diameter other than at Crown			+5%/–0%			
	Cross-section Area at Crown			–0%			
	Other Dimensions			± 2.5%			
Length of Chain Cables over 5 Links				+2.5%/–0% (2)			
Accessories	Nominal Diameter			+5%/–0%			
	Other Dimensions			± 2.5%			
Stud Position (3)	Off-center Distance "X"			0.10d max.			
	Deviation "α" from 90°			4° max.			

Notes:

(1) Minimum mass per meter of stud link chain cable is to be $0.0219d^2$ (kg.).

(2) The standard length of stud link chain cable over five links is to be 22d. The length is to be measured with the chain cable under tension after proof load test.

(3) The tolerances of stud fit position "X" and "α" are shown in the following figure:

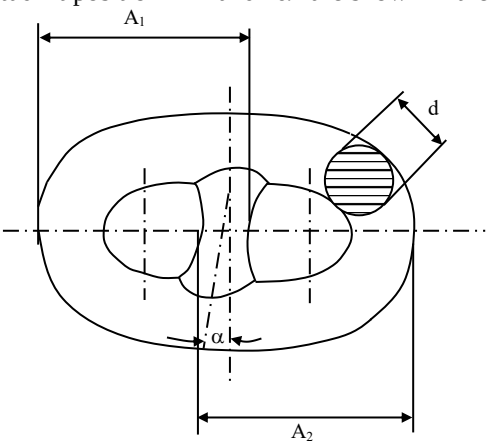

Off-center distance

$$X = \frac{A_1 - A_2}{2}$$

13.4 Offshore Mooring Chains

13.4.1 The form and proportion of chain links and accessories are to be designed in accordance with ISO 1704-1991 or acceptable recognized standards.

13.4.2 Chain manufacturing

(a) The chains are to be manufactured in continuous lengths by flash butt welding.

(b) Bar material may be heated either by electrical resistance or in a furnace. For electrical resistance heating, the heating phase is to be controlled by an optical heat sensor. For furnace heating, the temperature is to be controlled and continuously recorded using thermocouples in close proximity to the bar. In both cases, the controls are to be checked at least once every 8 hours and records taken. Records of bar heating, flash welding and heat treatment are to be made available for inspection by Surveyor.

(c) The flash welding parameters in platen motion, current as a furnace of time and hydraulic pressure are to be controlled during welding of each link and to be checked and recorded at least once every 4 hours.

(d) Machining fillet radius of Kenter shackles are not to be less than 3% of nominal diameter.

13.4.3 Fitting of studs

(a) The stud is to give an impression in the chain link which is sufficiently deep to secure the position of the stud, but the combined effect of shape and depth of the impression is not to cause any harmful notch effect or stress concentration in the link. Where plastic straining is used to set studs, the applied load is not to be greater than that qualified in approval tests.

(b) Studs may be welded into Grades R3 and R3S chains, welding on both ends of studs and welding of studs into Grade R4 chains are not permitted unless especially approved. The welding is to be made by qualified welders using an approved procedure and approved low-hydrogen welding materials, and to be completed before heat treatment of the chains.

(c) The stud ends must be a good fit inside the link and the weld is to be confined to the stud end opposite to the flash butt weld. The full periphery of the stud end is to be welded unless otherwise approved. The fillet of weld is to be in a minimum size to comply with the practice submitted and approved.

(d) The stud welds are to be of good quality and free from defects such as cracks, lack of fusion, gross porosity and undercuts exceeding 1 mm. All stud welds are to be visually examined. At least 10% of all stud welds within each length of chain are to be examined by dye penetrant or magnetic particles after proof load test. If cracks or lack of fusion are found, all stud welds in that length are to be examined.

13.4.4 Heat treatment

(a) Finished chain cables and accessories are to be austenitized, above the upper transformation temperature, or to be tempered, at a combination of temperature and time within the limited established. The heat treatment is to be completed prior to the proof loading, breaking and mechanical tests.

(b) The chain cables are to be heat treated in a continuous furnace; batch heat treatment is not permitted. The temperature and time (or chain speed) are to be controlled and continuously recorded.

13.4.5 Breaking load test for finished chains

(a) Sample lengths, each comprising at least of three links, are to be selected from the chain cables for breaking load tests. The frequency of sampling is to comply with the intervals given in the following Table, provided that every cast is represented.

Nominal Chain Diameter d (mm)	Max. Sampling Interval (m)
$d \le 48$	91
$48 < d \le 60$	110
$60 < d \le 73$	131
$73 < d \le 85$	152
$85 < d \le 98$	175
$98 < d \le 111$	198
$111 < d \le 124$	222
$124 < d \le 137$	250
$137 < d \le 149$	274
$149 < d \le 162$	297
$162 < d \le 175$	322

(b) At least one sample out of every batch or every 25 accessories, whichever is less, is to be selected for breaking load tests. For accessories produced individually or in small batches, alternative testing may be accepted subject to the special approval of the Society. A batch of accessories is to be of the same grade, size and heat treatment charge and to have originated from a same charge of material.

(c) The samples are to withstand the load calculated from the formulas given in the following Table tested by an approved test machine, they are to have no sign of crack and fracture after application of the required load and maintained at that load for at least 30 seconds. The samples after test are to be scrapped.

Chain Grade	Formula of Breaking Test Load (kN)
R3	$0.0223d^2 (44 – 0.08d)$
R3S	$0.0249d^2 (44 – 0.08d)$
R4	$0.0274d^2 (44 – 0.08d)$
Where d = Nominal diameter of chain in mm.	

(d) If a break load test fails, two further test samples are to be cut from the same length of chain cable for retesting, if one of the retest fails, this length of chain is to be rejected. Based on satisfactory results of both retest samples and the results of failure investigation, the Surveyor will then decide what lengths of the chain can be accepted and on further action.

(e) If the sample of accessories fails to withstand the breaking load without fracture, two more samples may be taken from the same batch for retesting, if one of the retest sample fails, this batch of accessories is to be rejected.

(f) If the tensile loading capacity of the testing machine is insufficient to apply the breaking load for chains of large diameter, another equivalent testing method may be accepted subject to the special approval of the Society.

(g) Where the accessories are of increased dimension or alternatively a material with higher strength characteristics is used, they may be included in the outfit at the discretion of the Society, provided that

(i) the accessories are successfully tested at the prescribed breaking load appropriate to the chain for which they are intended, and

(ii) it is verified by procedure tests that such accessories are so designed that the breaking strength is not less than 1.4 times the prescribed breaking load of the chain for which they are intended.

13.4.6 Proof load test for finished chains

(a) The entire length of chain cables and all accessories are to be subjected to a proof load test in an approved test machine to withstand a load calculated from the formulas given in the following Table, having no sign of fracture and crack. Where the tested proof loads have been adequately recorded by a satisfactory recording system, the Surveyor may not witness the proof load tests in full time.

Chain Grade	Formula of Proof Test Load (kN)
R3	$0.0148d^2$ (44 – 0.08d)
R3S	$0.0180d^2$ (44 – 0.08d)
R4	$0.0216d^2$ (44 – 0.08d)
Where d = Nominal diameter of chain in mm.	

(b) A length of chain cable is to be rejected in the event of two or more links fail during proof load test. If only one link fails, each three links are to be taken from both sides of the failed link for breaking load tests in accordance with the requirements given in 13.4.5 of this Part, this length of chain cable may be accepted provided that both breaking load tests are revealed satisfactorily.

(c) A thorough examination with Surveyor is to be carried out to identify the probable cause of failure of the proof load test. The failure investigation is to be carried out especially with regard to the presence in other lengths of factors or conditions thought to be causal to failure. Based upon the results of the failure investigation, the Surveyor will consider the extent of cable which is to be rejected and also the possibility that similar factor to those which caused the failure may also be present in other parts of the cable.

13.4.7 Mechanical tests for finished chains

(a) All grades of offshore mooring chains are to be subjected to the mechanical tests.

(b) One tensile and three sets of three impact test specimens are to be taken from links cut from the chain cables at intervals same as those for breaking load test sampling as given in 13.4.5(a) of this Part. Tensile and one set of impact test specimens are to be taken from the side of the link opposite the weld, the second set of impact test specimens is to have the notches positioned at the center of the flash butt weld and the third set is to be taken from the bend region. All the tensile and impact specimens are to be taken from the position having their axes at 1/3 radius from the outside surface of the cross section of the link. The mechanical tests are to comply with the requirements given in Table XI 13-2.

(c) The frequency of impact test at link bend may be reduced at the special approval of the Society provided it is verified by statistical means that the required toughness is consistently achieved.

(d) If the tensile test fails to meet the requirements, two further specimens may be taken from the same sample for retesting. The related length of chain cable will be considered acceptable if both retest specimens meet the requirements but failure of either or both of the retest specimens will result in rejection of the chains represented by the tests.

(e) If the impact test requirements are not achieved, retests may be carried out in accordance with 1.5.2 of this Part. Failure to meet the retest requirements will result in rejection of the chains represented by the tests.

13.4.8 Visual and non-destructive examinations for finished chains

(a) All chain links and accessories, except machined surface, are to be sand or shot blasted in order to ensure that their surfaces are free from scale, paint or other coating, so that they are available for thorough examination.

(b) After proof load test, all chain links and accessories are to be visually examined. Burrs, irregularities and rough edges of the links are to be contour ground. Special attention is to be paid to machined surfaces and high stress regions of the accessories. They are to be free from mill defects, surface cracks, dents and cuts, especially in the vicinity where gripped by clamping dies during flash welding of the links. The studs are to be securely fastened.

(c) All accessories and every chain links in way of the flash welded area including the area gripped by the clamping dies are to be examined by magnetic particles or dyepenetrate. The flash welded area of every chain link is also to be examined by ultrasonic detection method. They are to be free from defects such as cracks, lack of fusion and gross porosity.

(d) Surface defects in the flash weld region may be removed by grinding, provided that the depth of grinding does not exceed 5% of the link diameter and is smoothly contoured into the surrounding area. The final dimensions are still to conform with the agreed standard.

13.4.9 Dimensional examinations for finished chains

(a) After proof load testing, the entire chain cable is to be checked for length, 5 links at a time with an overlap of 2 links, to ensure that the chain cable meets the tolerance requirements given in Table XI 13-4. The measurements are to be made while the chain cable is loaded to 5~10% of the specified proof test load. The links held in the end blocks may be excluded from this measurement. If the length over 5 links is short, the chain may be stretched by a load not more than 110% of the specified proof test load and that only random lengths of the chain cable need stretching. If the length exceeds the specified tolerance, the over length chain links may be cut out.

(b) At least 5% of chain links in the cable and at least one out of every 25 accessories in same type, size and grade are to be checked for dimensions after proof load testing to ensure that they meet the tolerance requirements given in Table XI 13-4. If any link fails to meet the dimensional tolerance requirements, measurements are to be made on 20 more links on each side of the affected link. If a single particular dimension fails to meet the dimensional tolerance requirements in more than 2 of the measured links, all links in the cable are to be examined.

13.4.10 Connecting common links or substitute links

(a) The defective links in chain cable found by the above requirements of tests and examinations are to be cut out and inserted by connecting common links. The use of connecting common links is restricted to 3 links in each 100 m of chain. The use of joining shackles are subjected to the special approval of the Society.

(b) Single links to connect lengths of heat treated chain cable or to substitute for test links or defective links without the necessity for re-heat treatment of the whole length of chain cable are to be made by the chain manufacturer in accordance with an approved procedure. Separate approvals are required for each grade of chain and the tests are to be made on the maximum size of chain for which approval is sought.

(c) Manufacture and heat treatment of connecting common link is not to affect the properties of the adjoining links. The temperature reached by these links is nowhere to exceed 250°C.

(d) Each connecting common link is to be subjected to the appropriate proof load test and non-destructive examination as specified in 13.4.6 and 13.4.8 of this Part. A second identical link is to be made for mechanical test and non-destructive examination as specified in 13.4.7 and 13.4.8 of this Part.

13.4.11 Marking and documentation

(a) The offshore mooring chain cables and accessories, which meet the requirements of the Society, are to be clearly stamped with the Society's mark ®, certificate number assigned by the attending Surveyor and chain grade on the stud of the following places, the markings are to be permanent and legible throughout the expected lifetime of the chain. The number and location of marked links are to be stated on the certificate.

(i) At each end and at interval not exceeding 100 m. of each chain cable.

(ii) On all connecting common links or shackles and their adjacent links.

(iii) On all accessories.

(b) In addition to the above required markings, the first and last common links of each individual charge used in the continuous length are to be adequately and traceable marked.

(c) Individual certificates are to be issued for each continuous single length of chain. Each type of accessory is to be covered by separated certificates.

Chapter 14
Steel Wire Ropes

14.1 General

14.1.1 Steel wire ropes, which are necessary for the safety or operation of the ship and the safety of life, such as mooring lines, tow lines, steering wires, boat falls, cargo gear ropes, etc., are to be manufactured, tested and inspected in compliance with the requirements of this chapter.

14.1.2 Steel wire ropes are to be manufactured at the works approved by the Society or other recognized authorities.

14.1.3 Construction and strength of the steel wire ropes are to comply with the requirements of a recognized national or international standard or a particular design approved by the Society.

14.1.4 The individual wires used for steel wire ropes are to be galvanized, they are to be of homogeneous quality, consistent strength and uniform finish. Fibres used for cores of wire ropes and strands are to be of good quality and to contain oil suitably.

14.2 Tests and Inspections

14.2.1 Steel wire ropes are to be subjected to the following tests and inspections:

(a) For individual wires
- (i) Diameter measurement.
- (ii) Coiling test.
- (iii) Torsional test.

(b) For steel wire ropes
- (i) Visual and dimensional inspections.
- (ii) Breaking test.

14.2.2 Each length of steel wire rope is to be subjected to the tests and inspections. Where several lengths of steel wire ropes are divided from a long wire rope manufactured continuously in the same manner, the tests and inspections may be carried out over random one length of them.

14.2.3 Alternatively, the requirements and items of tests and inspections in accordance with those of recognized national or international standard or of approved specification may be acceptable.

14.2.4 Test specimens of individual wires

(a) A suitable length of the strand is to be cut from one end of the rope and unstranded into wires. Each in a number of test specimen as specified in Table XI 14-1 is to be picked up for coiling test and torsional test.

(b) The wire test specimens are then to be straightened carefully without heating and damage. The test specimen taken from the wires for core strands and fillers is not required.

14.2.5 Requirements for diameter of wires and ropes

(a) The difference between the maximum and minimum diameters of the wires composing in the wire rope is not to exceed the limits given in the following table.

Nominal Dia. of Wire d (mm)	Permissible Variation in Dia. of Wires dmax – dmin (mm)
0.20 ≤ d ≤ 1.00	0.06
1.00 < d ≤ 2.24	0.09
2.24 < d ≤ 3.75	0.12
3.75 < d ≤ 4.50	0.14

(b) Where a steel wire rope is constructed by two or more sizes of wire in diameter, each size of wires are to be measured and to comply with the requirements given in above 14.2.4(a).

(c) The diameter of steel wire ropes is taken as an average measured in at least two positions except within 1.5 m from the ends of the rope. A tensile load not exceeding 5% of the rope breaking strength may be applied to keep the rope stretched during measuring. The diameter tolerance of the steel wire ropes of 10 mm and more in nominal diameter is to be within +7% and –0% and to be within +10% and –0% for nominal diameter less than 10 mm.

14.2.6 Coiling tests for individual wires

(a) The test specimen is to withstand if it is wrapped tightly eight times around the wire of its own diameter and subsequently unwrapped without showing any sign of fracture to such an extent that any zinc coating can be removed by rubbing with the bare fingers. The number of failed test specimens is to be not more than that specified in column (A) of Table XI 14-1.

(b) Where test fails the requirements of 14.2.6(a) above, an additional test in same number of test specimens as the first test may be permitted. For acceptance, the total failed test specimens of the first and additional tests are to be not more than the number given in column (B) of Table XI 14-1.

Table XI 14-1
Test Requirements of Individual Wires

Total Number of Wires in Wire Rope N (1)	Number of Wire Test Specimens (2)	Number of Failed Test Specimens	
		(A)	(B)
N ≤ 100	4	0	2
100 < N ≤ 120	6	1	3
120 < N ≤ 150	8	1	3
150 < N ≤ 200	10	1	3
200 < N ≤ 300	15	1	3
300 < N	20	2	4

Notes:

(1) The total number of individual wires in each size composing in the wire rope, except the wires for cores and fillers.

(2) Test specimens are to be taken at random in several strands and to include each size (diameter) of wires composing in the wire rope.

14.2.7 Torsional tests for individual wires

(a) The test specimen is to be gripped at both ends to allow a distance between the grips of 100 times the wire diameter, with one end fixed and the another end twisted at a speed as specified in Table XI 14-2 until fracture. A tensile load not exceeding 2% of the wire breaking strength may be applied to keep the wire stretched. The specimens are to withstand the number of twists not less than that specified in Table XI 14-2 without fracture.

(b) For acceptance, the test is to be neither the test specimens failed more than the number given in column (A) of Table XI 14-1 nor any specimen failed in number of twist less than half of the required number given in Table XI 14-2.

(c) Where test specimens failed in number more than that given in column (A) of Table XI 14-1 without any specimen failed in number of twist less than half of the requirements, an additional test in same number of test specimens as the first test may be permitted. For acceptance, neither the total failed test specimens of the first and additional tests more than the number given in column (B) of Table XI 14-1 nor any specimen failed less than half of the required number of twists.

Table XI 14-2
Test Requirements of Torsional Tests for Individual Wires

Nominal Diameter of Wire d (mm)	Maximum Speed of Twisting (r.p.m.)	Minimum Required Number of Twists
$0.20 \le d \le 1.00$	180	21
$1.00 < d \le 2.24$	60	20
$2.24 < d \le 3.75$	60	18
$3.75 < d \le 4.50$	30	17

14.2.8 Breaking tests for steel wire ropes

(a) The breaking test specimen of steel wire rope is to be cut from one end of the rope with sufficient length to provide a clear test length in 30 times of the rope diameter, but neither to be less than 600 mm nor exceeding 2 m. Both ends of the test specimen are to be formed suitably for gripping in testing machine.

(b) The breaking test specimen is to be gripped on the testing machine and applied to load slowly and steadily until maximum load is obtained. The actual breaking load is not to be less than the specified breaking strength required in the recognized national or international standard or a particular design approved by the Society.

(c) If the specimen under this test is broken at one end of its grips before reaching the required breaking test load, the test may be repeated with another specimen.

14.3 Marking

14.3.1 The steel wire ropes are to be affixed a marked metal tag with following items to indicate that they are tested and inspected satisfactorily in compliance with the Rules' requirements.

(a) Society's mark ® with certificate number assigned by the attending Surveyor.

(b) Construction and size of rope.

(c) Date of final inspection.

Chapter 15
Fibre Ropes

15.1 General

15.1.1 Fibre ropes intended as mooring lines, cargo gear ropes, etc. may be composed of natural fibres or of synthetic fibres. They are to be manufactured at the works approved by the Society or other recognized authorities.

15.1.2 Materials, constructions and strength of the fibre ropes are to comply with the requirements of a recognized national standard or of a particular design approved by the Society.

15.1.3 Fibre materials are to be of good quality, consistent strength and suitable for the intended purpose. Fibre ropes are generally to be constructed by 3, 4, 8 or 9 strands.

15.1.4 Weighting or loading matter is not to be added, and any lubricant is to be kept to a minimum. Any rot-proofing or water repellence treatment is not to be deleterious to the fibre nor is it to add to the weight or reduce the strength of the rope.

15.2 Tests and Inspections

15.2.1 Breaking tests of fibre ropes

(a) A breaking test specimen is to be cut from one end of each length of rope with sufficient length to provide a clear test length of 30 times its own diameter or 1 m, whichever is the less. The actual breaking load is not to be less than the specified breaking strength of the recognized standard or the approved specification adopted.

(b) Where several lengths of ropes are divided from a long rope manufactured continuously in a same manner, the breaking test may be carried out by random one length of them.

(c) If the test specimen is held by grips and the break occurs within 150 mm of the grips, the test may be repeated, but not more than two tests may be made on any one rope.

15.2.2 Inspection for diameter of ropes

The diameter of the fibre rope is the diameter of the circumscribed circle of the rope measured when a load equal to 5% of the specified breaking strength is applied. The diameter tolerance of the fibre rope is to be within ±3% of the nominal diameter.

15.3 Marking

15.3.1 The fibre ropes are to be affixed a marked metal tag with following items to indicate that they are tested and inspected satisfactorily in compliance with the Rules' requirements.

(a) Society's mark ® with certificate number assigned by the attending Surveyor.

(b) Construction and size of rope.

(c) Date of final inspection.

Chapter 16
Flexible Hoses

16.1 General

16.1.1 This chapter gives the requirements for short joining length of flexible hoses made of non-metallic hoses (rubber, synthetic rubber or resin, etc.) or convoluted metal tubes with end couplings intended to be used where necessary to accommodate relative movements between machineries and/or fixed piping systems in the readily accessible positions.

16.1.2 Flexible hoses intended for the following installations are to be subjected to a prototype test and approved by the Society:

(a) In Group-I and -II piping systems.

(b) In a position where failure of the hoses could give rise to the danger of flooding or regard to the fire risk.

16.2 Construction

16.2.1 The material, construction and design of the flexible hoses are to comply with the national or recognized standards accepted by the Society or appropriate specifications approved by the Society suitable for the fluids, pressures, temperatures and ambient conditions in service.

16.2.2 The non-metallic hoses are generally to be reinforced with integral cotton braids or closely woven integral wire braid.

16.2.3 The end couplings, unless otherwise specified, are to comply with the requirements given in 2.10 of Part VI or recognized standards accepted by the Society.

16.3 Application

16.3.1 Flexible hoses are to be limited to the length necessary to provide for flexibility and not to be subjected to torsional deflection under normal operating conditions.

16.3.2 Non-metallic hoses with integral cotton braid reinforcement are only available for water service piping. In case the hoses intended for oil service piping, they are to be of integral wire braid reinforced type.

16.3.3 Non-metallic hoses used for cooling water system may be fitted by means of hose clamps instead of fixed type end couplings provided that the hose is a short and reasonably straight length fitted between two metallic pipes or between the engine and metallic pipes.

16.3.4 Flexible hoses are not to be used to penetrate watertight boundaries as well as fire protecting divisions.

16.4 Approval and Tests

16.4.1 Prototype approvals

(a) For each design of flexible hoses, the details of materials and the construction, specifications of the design pressure and temperature, and the method of attaching end couplings are to be submitted for approval.

(b) Various tests for ensuring the mechanical, physical and chemical properties of materials are to be carried out in accordance with the recognized or appropriate standards accepted by the Society. However, these tests may not be required to be carried out in the presence of the Surveyor provided that the tests are carried out by an acceptable organization and reveal results to the satisfaction of the Society.

(c) Fire-resisting or flame-retardant tests may be required for non-metallic hoses, where failure of the hoses could give rise to the danger of flooding or to the fire risk unless the hoses are suitably enclosed or protected in an equivalent manner.

(d) Each design of flexible hoses completed with end couplings is to withstand a bursting pressure not less than 4 times of their design pressure.

16.4.2 Each flexible hose intended for the purposes given in 16.1.2 of this Part is to be subjected for a hydrostatical test in the presence of the Surveyor at the pressure not less than 1.5 times of the design pressure of the piping system in service.

Chapter 17
Side Scuttles

17.1 General

17.1.1 Side scuttles to be fitted up on ships according to the requirements in 13.3 of Part II are to comply with the requirements in this Chapter or to be of equivalent quality.

17.1.2 In addition, the requirements of National and International Regulations in force are to be complied with.

17.2 Construction

17.2.1 The constructions and dimensions of the side scuttles are to principally comply with ISO 1751 or other recognized standards accepted by the Society.

17.2.2 Deadlights

(a) Deadlights of side scuttles are to be strongly ribbed on back surface and fitted up to the frames by strong hinges and provided with the means capable of being secured by bolts. They are also to be so constructed as to be kept watertight where closed, by means of anti-vulcanizing rubber packings of good quality up on the grooves which are provided on the rims.

(b) Portable deadlights, if fitted, are to be so arranged as to be quickly closed and secured, and to be kept sufficiently watertight where closed.

17.2.3 Plugs

Plugs, if fitted, are to have a good fit in their proper position from the inside of the ship, by means of the shoulder or other suitable appliances provided in the side scuttle frames. They are to be so fitted up that their outer surface is kept at least 3 mm inside from the outer surface of the scuttle frames.

17.2.4 Packing grooves

Grooves which are provided on the rims of the glass holders and the deadlights are to be of 9 mm in surface breadth, 12 mm in bottom breadth and 6 mm in depth as far as possible.

17.2.5 Glass holders

Glass holders of hinged type are to be fitted up to the frames by strong hinges and provided with the means capable of being secured by bolts. They are to be so constructed as to be kept watertight where closed, by means of anti-vulcanizing rubber packings of good quality fitted up on the grooves which are provided on the holders.

17.2.6 Pivot bolts

Pivot bolts for glass holders and deadlights are to be secured to the frames by strong hinges.

17.3 Materials

17.3.1 Materials used for the construction of side scuttles are to comply with the design specification approved by the Society or other recognized standards accepted by the Society.

17.3.2 Side scuttles are generally to be made of steel, copper alloy or aluminium alloy. Deadlights may be made of malleable iron.

17.3.3 The surfaces of side scuttle parts made of steel other than stainless steel, iron or aluminium alloy are to be effectively surface-treated for anti-corrosion.

17.3.4 Cast materials except irons and copper alloy, of side scuttle parts, are to be manufactured at the works or foundries approved by the Society in accordance with the requirements given in 6.2, 9.1 and 11.1 of this Part.

17.3.5 Side scuttles are to be made of strengthened glass or equivalent materials, which is to be perfectly plane on both sides, free from any injurious flaw, crack and bubble. The surface is to be finished with polishing and the edge with grinding.

17.4 Tests and Inspections

17.4.1 Material Tests

(a) Cast materials

(i) Cast materials of side scuttle parts are to be subjected to material tests and are to comply with the requirements given in 17.3.1 of this Part.

(ii) One test sample for one tensile test and, if required, for one bending test specimens, is to be taken from each batch in same cast and same heat. Where the number of castings in the batch exceeds 50, an additional sample is to be taken from each 50 castings or fraction thereof.

(b) The material test for rolled plates and bars of side scuttle parts may be waived to carry out in the presence of the Surveyor provided that the materials were manufactured by appropriate works with Mill Certificates revealing conditions to the satisfaction of the Surveyor. Otherwise, they are to be tested in the presence of the Surveyor and to comply with the requirements given in 17.3.1 of this Part.

17.4.2 On-board tests

To ensure that the side scuttle and packing are watertight when fitted, a hose test or equivalent is to be carried out by the shipbuilder to the satisfaction of the Surveyor. The hose test is to consist of hosing the side scuttle by means of at least 12.5 mm nominal size hose held at a distance of not more than 1.5 m from the side scuttle and with a water pressure of a least 250 kPa.

17.4.3 Shop test

An equivalent hydraulic test is to be carried out by the manufacturer before despatch by means of batch tests (approximately 10 % of the delivery batch, with a minimum of two side scuttles). The side scuttle is to be tested by being subjected to the hydraulic pressures given in Table XI 17-1, under the following conditions:

(a) Procedure 1: With glass pane and open deadlight except for Type A, with diameters of 350 mm and 400 mm, where at a test pressure of 150 kPa the deadlight is to be closed.

(b) Procedure 2: Without glass pane and with closed deadlight.

The rationale behind procedure 1 is that practice has shown that for normal side scuttles of Type A, with a diameter of 350 mm, 400 mm or 450 mm, when subjected to a test pressure of 150 kPa, the deflection between the fixed points is so heavy that leakage occurs. A closed deadlight would support the glassholder and diminish the deflection.

Table XI 17-1
Test Pressures for Watertightness

Side scuttle type	Test pressure (kPa)	
	Procedure 1	Procedure 2
A	150	100
B	75	50
C	35	---

17.4.4 Mechanical strength test

(a) Prototype test

A prototype side scuttle without glass pane and with closed deadlight is to be subjected to a mechanical strength test by a punch method using the test pressures given in Table XI 17-2, see Fig. XI 17-1.

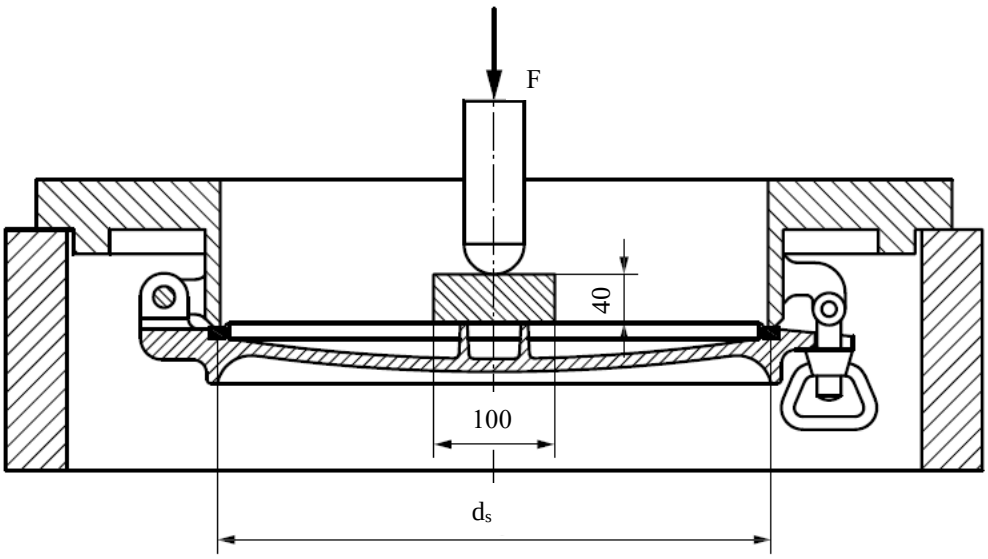

Fig. XI 17-1
Prototype Test

(b) Test performance

(i) The punch is to be placed that side of the deadlight which could be subjected to direct contact with the sea. If the construction of the deadlight makes it necessary, a plate of 100 mm diameter and 10 mm thickness may be placed between the punch and the deadlight.

(ii) When subjected to the pressure given in Table XI 17-2, the permanent deformation of the deadlight is not to exceed 1% of the nominal size of the side scuttle.

Table XI 17-2
Test Pressures for Mechanical Strength

Side scuttle type	Test pressure(kPa)
A	240
B	120

Note: The test pressures in Table XI 17-2 are the values assumed for the calculation of the proof loads to be applied by the punch test.

17.4.5 Fire resistance test

Side scuttles for fire-resistant constructions (series P) shall have been subjected to prototype testing for fire resistance, see ISO 5797: current edition.

17.5 Marking

17.5.1 For side scuttles which have been satisfactorily tested and inspected, the Society marking i.e. ® is to be stamped on suitable places of the side scuttles.

Chapter 18
Windows

18.1 General

Windows to be fitted up on ships according to the requirements in 13.3 of Part II are to comply with the requirements in this Chapter or to be of equivalent quality.

18.2 Construction

18.2.1 Except otherwise specified as below, the constructions and dimensions of the windows are to comply with ISO 3903 or other recognized standards accepted by the Society.

18.2.2 Design loads

(a) The design pressure for calculating the thickness of windows is to be in accordance with ISO 5779.

(b) The design pressure derived in 18.2.2(a) above is not to be less than the minimum design pressure (P_{min}) given below.

	When L ≤ 250 m, P_{min}	When L > 250 m, P_{min}
Exposed front bulkhead of the first tier superstructure	$25+\frac{L}{10}$ (kPa)	50 (kPa)
Other places	$12.5+\frac{L}{20}$ (kPa)	25 (kPa)

(c) If ship's length is less than 20 m, it may apply to a appropriate standard for approval when agreed by the Society.

18.2.3 Minimum glass thickness

The minimum glass thickness of windows is to be determined as follows:

$$t_w = \frac{b}{200}\sqrt{\beta P_w} \qquad \text{mm}$$

where:

t_w = The minimum thickness of glass, in mm

P_w = Design load from 18.2.2, in kPa

β = A non-dimensional coefficient as specifed in Table XI 18-1

b = The length of the shorter dimension of the window, in mm

Table XI 18-1
Values for Factor β Based on Window Size Ratio K

Value of K(1)	1.0	0.9	0.8	0.7	0.6	0.5	0.4	0.3	0.2	0.1	0
β	0.287	0.330	0.393	0.478	0.545	0.612	0.668	0.704	0.730	0.745	0.750

Notes:

(1) K: window size ratio $= \frac{\text{Shorter dimension (mm)}}{\text{Larger dimension (mm)}}$

18.3 Materials

Materials used for the construction of windows are to comply with ISO 3903 or other recognized standards accepted by the Society.

18.4 Testing

Testing of the windows is to comply with ISO 3903 or other recognized standards accepted by the Society.

18.5 Marking

For windows which have been satisfactorily tested and inspected, the Society marking i.e. ℞ is to be stamped on suitable places of the windows.

Chapter 19
Non Metallic Materials

19.1 General

The requirements of this Chapter apply to testing ,inspection and manufacture of non-metallic materials or products used for ships.

19.2 Machinery Chocking Compounds (Epoxy Resin Chocks)

19.2.1 The thermosetting epoxy resin chocks proposed to be used to fill the space between the base of machinery and foundation of machinery are to be approved by the Society before construction is commenced. The materials are to be accepted by the surveyor on the basis of a detailed description, including inspection and test results, given by the manufacturer.

19.2.2 The casting manufacturer is required to supply the details of manufacturing process, including design principles, operational methods and requirements, and installation procedure for examination.

19.2.3 The casting of resin chocks applied to cast the sample are to achieve the minimum exotherm as specified in practical construction condition, and the casting are to be subject to the following approval tests.

19.2.4 The casting manufacturer is to determine the maximum temperature achieved by the cured casting in conditions equivalent to those of intended use.

19.2.5 The following properties of cured chock material are to be determined:

(a) Barcol hardness;

(b) heat deflection temperature;

(c) flammability;

(d) compressive strength and modulus of elasticity;

(e) oil absorption (immersed in diesel oil and lubricating oil for 7 days);

(f) water absorption (immersed in artificial sea water and distilled water for 7 days);

(g) notched Izod impact strength; and

(h) curing linear shrinkage.

19.2.6 The casting manufacturer is to possess adequate information and test methods to show that the creep of epoxy resin chocks subjected to the pressure for a sufficient period at different temperatures will not affect their utility.

19.2.7 The operating conditions of epoxy resin chocks proposed for approval as follows : In the process of procedure ,static load caused by equipment weight is usually not larger than 0.7 N/mm^2, maximum static load exerted on chocks caused by equipment weight plus bolt fastening force is not greater than 4.5 N/mm^2 and temperature is not greater than 80°C. The requirements for properties of the castings are given in Table XI 19-1.

Table XI 19-1
Requirements for Properties of Resin Chock Castings

Barcol hardness	Heat deflection temperature °C	Flammability	Compressive strength (N/mm^2)	Compressive modulus of elasticity (N/mm^2)	Oil absorption(1) (%)	Water absorption(1) (%)
ASTM D2583	ISO 75-2	ASTM D635	ASTM D695	ASTM D695	ISO 62	ISO 62
≥ 35	≥ 80	Self-extinguishing	≥ 120	≥ 5000	≤ 0.9	≤ 0.9

Note:
(1) The size of test sample for water and oil absorption is 50 mm × 50 mm × 4 mm.

19.2.8 Where the castings intended for installation of stern tubes and stern bushes, in addition to the requirements of 19.2.7, the measured tensile strength and tensile modulus of elasticity are required to be provided, and the tensile strength is not to be less than 34 MPa.

19.3 Synthetic Bearing Materials for Rudder and Stern Shafts

19.3.1 This section gives the requirements for nylon (polyamide) and modified nylon materials intended for manufacturing bearings of rudder stocks, rudder pintles, rudder axles and stern shafts. For types of bearing materials other than those shown above, they are to submit the technical specification to Society for approval.

19.3.2 Synthetic bearing materials for rudder stocks, rudder pintles, rudder axles and stem shafts are to be approved by Society before construction.

19.3.3 Synthetic bearing materials for rudder stocks, rudder pintles, rudder axles and stem shafts are generally be shaped into cylinders, strips or half.

19.3.4 The following physical properties of bearing materials are to be inspected:

(a) tensile strength;

(b) friction coefficient (dynamic and static friction coefficients at both 20°C and 80°C in dry and wet conditions of the material);

(c) compressive stress and elastic modulus (25% straining);

(d) temperature resistance (compressive stress and modulus at 50°C and 25% compressive strain);

(e) volumetric swelling in ocean water (at 20°C and 80°C for 4 weeks/672 h);

(f) volumetric swelling in oil (at 20°C for 4 weeks/672 h);

(g) water resistance (compressive stress and modulus at 25% compressive strain after 4 weeks/672 h in ocean water);

(h) linear heat expansion coefficient (vertical to the compression side);

(i) wear rate (volume);

(j) hardness;

(k) impact strength;

(l) limit PV value (a product of the bearing pressure intensity and the linear velocity of relative slide on bearing surfaces); and

(m) density.

19.3.5 The physical properties of synthetic bearing materials are to comply with the requirements of Table XI 19-2 of this Chapter. The properties in 19.3.4 of this Chapter other than those mentioned in the Table are to be to the satisfaction of the standard or limiting value specified by the manufacturer.

Table XI 19-2
Requirements for Physical Properties of Synthetic Bearing Materials

Tensile strength (N/mm^2)	Friction coefficient	Compressive stress(1) (N/mm^2)	Compressive modulus(1) (N/mm^2)	Temperature and water resistance	Volumetric swelling in lubricating medium(4) (%)
≥ 70	≤ 0.25	≥ 120(2) ≥ 85(3)	≥ 1500(2)	Not less than 80% of test value in 19.3.4(c)	≤ 3

Notes:
(1) Under the condition of 25% compressive straining.
(2) Vertical to the compression side.
(3) Parallel to the compression side, only for bearings of strip shape.
(4) For test of volumetric swelling in lubricating medium, the size of test sample is 50 mm × 50 mm × t, t is generally 4 mm, and minimum product thickness may also be adopted.

19.3.6 The maximum permissible surface pressure of synthetic bearing materials is generally not greater than 5.5 N/mm^2. If a permissible surface pressure greater than 5.5 N/mm^2 need to be approved, in addition to complying with the requirements of 19.3.4 and 19.3.5, alternate wet-dry immersion tests of the material are to be carried out, with volumetric swelling not exceeding 3%.

19.3.7 Before each batch of products is dispatched from the manufacturer's work, the following items are to be inspected:

(a) compressive stress and elastic modulus (25% straining);

(b) hardness;

(c) tensile strength; and

(d) density.

Tel: *+886 2 25062711*
Fax: *+886 2 25074722*
E-mail: *cr.tp@crclass.org*
Website: *http://www.crclass.org*
© CR – All rights reserved

財團法人驗船中心
CR CLASSIFICATION SOCIETY

RULES FOR THE CONSTRUCTION AND CLASSIFICATION OF STEEL SHIPS 2022

PART XII – WELDING

July 2022

財團法人驗船中心
CR CLASSIFICATION SOCIETY

RULES FOR THE CONSTRUCTION AND CLASSIFICATION OF STEEL SHIPS 2022

PART XII – WELDING

July 2022

RULES FOR THE CONSTRUCTION AND CLASSIFICATION OF STEEL SHIPS

PART I CLASSIFICATION AND SURVEY

PART II HULL CONSTRUCTION AND EQUIPMENT

PART III SPECIAL SERVICE AND TYPE OF SHIPS

PART IV MACHINERY INSTALLATIONS – CONSTRUCTION AND SHAFTING

PART V BOILERS, PRESSURE VESSELS, THERMAL OIL HEATERS AND INCINERATORS

PART VI PIPING AND PUMPING SYSTEMS

PART VII ELECTRICAL INSTALLATIONS

PART VIII AUTOMATIC OR REMOTE CONTROL AND MONITORING SYSTEMS

PART IX FIRE PROTECTION, DETECTION AND EXTINCTION

PART X REFRIGERATED CARGO INSTALLATIONS

PART XI MATERIALS

PART XII WELDING

PART XIII NAVIGATIONAL SAFETY SYSTEMS

PART XIV GOAL-BASED SHIP CONSTRUCTION STANDARDS SHIPS

PART XV HULL CONSTRUCTION AND EQUIPMENT FOR SHIPS LESS THAN 90 M IN LENGTH

List of major changes in Part XII from 2019 edition

Acronyms

AIS	Automatic Identification System
ANTS	Automatic Navigation and Track-keeping System
ARPA	Automatic Radar Plotting Aid
BC Code	Code of Safe Practice for Solid Bulk Cargoes
BNWAS	Bridge Navigational Watch Alarm System
CA	Controlled Atmosphere
CDI	Chemical Distribution Institute
COW	Crude Oil Washing
CPA	Closest Point of Approach
CPP	Controllable Pitch Propeller
CSC	International Convention for Safe Containers
CSR	Common Structural Rules
CTOD	Crack Tip Opening Displacement
ECDIS	Electronic Chart Display and Information System
EEBD	Emergency Escape Breathing Devices
ENC	Electronic Navigational Chart
ESP	Enhance Survey Plan
ETA	Emergency Towing Arrangement
FEU	Forty-foot Equivalent Unit
FMEA	Failure Mode & Effect Analysis
FRP, GRP	Fibreglass Reinforced Plastics
FTP Code	International Code for Application of Fire Test Procedures
GBS	Goal-Based ship construction Standards
GDC	General Dry Cargo
GLONASS	Global Navigation Satellite System
GMDSS	Global Maritime Distress and Safety System
GPS	Global Positioning System
HAZ	Heat Affected Zone
HHP anchor	High Holding Power anchor
HSC	High Speed Craft
HTS	High Tensile Steel
IACS	International Association of Classification Societies
IBC Code	International Code for the Construction and Equipment of Ships Carrying Dangerous Chemicals in Bulk

ICS	The International Chamber of Shipping
IEC	International Electrotechnical Commission
IGC Code	International Code for the Construction and Equipment of Ships Carrying Liquefied Gases in Bulk
ILO	International Labour Organization
IMDG Code	International Maritime Dangerous Goods Code
IMO	International Maritime Organization
ISO	International Standards Organization
LAN	Local Area Network
LCS	Loading Computer System
LEL	Lower Explosive Limit
LRIT	Long-range Identification and Tracking of ships
MARPOL	International Convention for the Prevention of Pollution from Ships
MARVS	Maximum Allowable Relief Valve Setting
MEPC	Marine Environment Protection Committee
MLC	Maritime Labour Convention
MSC	Maritime Safety Committee
NDT	Nondestructive Testing
OCIMF	The Oil Companies International Marine Forum
OOW	Officer Of the Watch
PA	Public Address
PMA	Permanent Means of Access
PMS	Planned Machinery Maintenance Scheme
RH	Relative Humidity
PSPC	Performance Standard for Protective Coating
SENC	System Electronic Navigational Chart
SHHP anchor	Super High Holding Power anchor
SOLAS	International Convention for the Safety of Life at Sea
SRE	Ship Recycling
STCW	International Convention on Standards of Training, Certification and Watch-keeping for Seafarers
STS operation	Ship-To-Ship operation
S-VDR	Simplified Voyage Data Recorder
TCPA	Time to CPA
TEU	Twenty-foot Equivalent Unit
THD	Total Harmonic Distortion

TMCP	Thermo-Mechanical Controlled Processing
UPS	Uninterruptible Power Supply
VDR	Voyage Data Recorder
VEC	Vapor Emission Control

RULES FOR THE CONSTRUCTION AND CLASSIFICATION OF STEEL SHIPS

PART XII
WELDING

CONTENTS

Chapter 1 General 1

1.1 General 1
1.2 Tests, Inspections and Examinations 1
1.3 Test Specimens and Mechanical Tests 1
1.4 Other Inspections and Examinations 3

Chapter 2 Welding Procedures 6

2.1 General 6
2.2 Approval of Welding Procedures 6
2.3 Butt Welding Tests 8
2.4 Fillet Welding Tests 11
2.5 T-joints with Full Penetration Welding Tests 12
2.6 Retests and Additional Tests 12
2.7 Welding Procedure Qualification, Copper Alloy 13
2.8 Test Record 14

Chapter 3 Welder Qualifications and Control of Welding Operations 25

3.1 Control of Welding Operations 25
3.2 Welder and Welding Operator Qualifications 25
3.3 Welder's Qualification Tests 29
3.4 Retest 32
3.5 Certification 33
3.6 Period of Validity 33

Chapter 4 Welding Materials 43

4.1 General 43
4.2 Approval Tests for Manual Arc Welding Electrodes 46
4.3 Approval Tests for Semi-Automatic Welding Materials 48

4.4 Approval Tests for Automatic Welding Materials 49
4.5 Approval Tests for One-side Welding Materials 49
4.6 Approval Tests for Electro-slag and Electro-gas Welding Materials 50
4.7 Approval Tests for Stainless Steel Welding Materials 50
4.8 Approval Tests for Aluminium Alloy Welding Materials 50
4.9 Annual Tests for Approved Welding Materials 51

Chapter 5 Welding Constructions 70

5.1 General 70
5.2 Workmanship 70
5.3 Welding Practices 71
5.4 Post Weld Heat Treatment for Machineries, Boilers, Pressure Vessels and Piping 73
5.5 Welding of Ship Constructions 75
5.6 Welding of Machinery Constructions 83
5.7 Welding of Boilers and Pressure Vessels 83
5.8 Welding of Piping 89
5.9 Welding of Clad Steel Plates 90

Chapter 1
General

1.1 General

1.1.1 The welding procedures, welder qualifications, operation controls, welding materials and welding constructions to be used in the welding of ship constructions, equipment, machinery, boilers, pressure vessels, piping, etc. of a ship classed or intended to be classed with the Society are to comply with the requirements of this Part, unless otherwise specially approved.

1.1.2 Requirements given in this Part are applicable to the welding of steels and of aluminum alloys made by manual, semi-automatic or automatic "electric arc fusion weld" process.

1.1.3 For "semi-automatic" and "automatic" welding, the welding gun provides continuous wire feed; for semi-automatic welding, the welding gun is held manually; and for automatic welding the welding gun is machine held with various degrees of controlled motion provided by the machine.

1.2 Tests, Inspections and Examinations

1.2.1 Prior to the operation of welding, the welding procedure, welder qualifications and welding materials are to be approved and subjected to a satisfactory test by the Society in accordance with the requirements given in this Part.

1.2.2 All welding work is to be carried out in accordance with the approved welding specifications and normal good welding practices under a satisfactory qualification control, and to be subjected to the satisfaction of the Surveyor.

1.2.3 All finished welds are to be tested, inspected and examined preferably by visual inspections, non-destructive examinations or hydrostatic methods, and, if deemed necessary, or as required in Chapter 5 of this Part, by workmanship tests of welding to ensure the welds until the satisfaction of the Surveyor.

1.3 Test Specimens and Mechanical Tests

1.3.1 Test specimens and mechanical tests of welds are to be prepared and performed in accordance with the requirements of this Part and the applicable requirements given in Chapter 2 of Part XI.

1.3.2 Tensile tests

(a) Deposited metal longitudinal tensile test specimens are to be of type T1 as given in Table XI 2-1 of Part XI, where, the diameter, d, is generally to be 10 mm. Except otherwise required, longitudinal axis of the specimens is to coincide with the center of the weld approximately in way of the half thickness of the plate.

(b) Transverse tensile test specimens for butt weld tests are to be machined to the dimensions shown in Fig. XII 1-1. The weld is to be filed, machined or ground flush with the surface of the plate.

1.3.3 Bending tests

(a) Face and root bending test specimens

(i) Test specimens, except for guided bend tests, are to be 30 mm in width and of the full plate thickness, where the thickness of the specimen exceeds 25 mm, the specimens may be machined on the compression side to reduce the thickness to 25 mm.

(ii) Test specimens for guided bend tests are to be 38 mm in width and of the full plate thickness in case the thickness of the specimen is 9 mm or less. Where the thickness exceeds 9 mm, the specimen is to be machined on the compression side to reduce the thickness to 9 mm.

(b) Test specimens for side bending tests are to be 9 mm in width and of the full plate thickness. For guided bend tests, where the thickness exceeds 38 mm, specimens are to be reduced to 38 mm thick by machining on one surface of the specimens.

(c) Bending test specimens are generally to be 250 mm in length. The weld deposited metal is to be located in way of mid-length of the specimen to subject to maximum tension and compression in test.

(d) Weld reinforcements and back straps are to be removed, filed, ground or machined flush with the surfaces of the plate. Edges of test specimens are to be rounded to a radius of 1 to 2 mm.

(e) Guided bend tests are to be carried out by jigs shown in Fig. XII 1-2.

(f) Bending tests which comply with national or international standards may be used when accepted by the Surveyors.

(g) The test is considered to be satisfactory if, after bending, the specimen is not to show any crack or other open defects exceeding 3 mm in length in any direction on the surface.

1.3.4 Impact tests

(a) Impact tests for welding are generally to be in accordance with the requirements given in 2.4 of Part XI by type N1 Charpy V-notch test specimens.

(b) The notch of the test specimen is to be cut in a face of the specimen which was originally perpendicular to the surface of the test assembly. Except otherwise required, the notch is generally to be cut in line with the center of the weld and, in general, the test specimen is taken from middle of plate thickness as shown in Fig. XII 1-3.

1.3.5 Fracture tests

(a) A fillet weld test assembly or specimen in form of T joint is to have the fillet weld on one side gouged or machined to facilitate breaking the another side fillet weld by closing the two abutting plates together, subjecting the root of weld to tension (see Fig. XII 1-4).

(b) The fractured surface of the fillet weld is to be examined and there is to be no evidence of incomplete penetration, internal cracking or lack of root fusion and to be reasonably free from porosity. The incomplete fusion at the root corner of fillet may be acceptable provided the total length of the incompletely fused areas is not more than 10% of the total welded length.

(c) The fracture test specimen may be cut into short sections to facilitate breaking open.

1.3.6 Hardness tests

The Vickers method HV10 is normally to be used.

1.3.7 Retests and additional tests

(a) Where the result of a tensile or bending test does not comply with the requirements, 2 additional test specimens of the same type are to be prepared from either the same test assembly of the first test or the assembly newly welded with welding condition same as the first test assembly are to be satisfactorily tested.

(b) When the average value of the three initial Charpy V-notch impact specimens fails to meet the stated requirement, or the value for more than one specimen is below the required average value, or when the value of any one specimen is below 70% of the specified average value, three additional specimens from the same test assembly may be tested and the results added to those previously obtained to form a new average. If this new average complies with the requirements and if not more than two individual results are lower than the required average and of these, not more than one result is below 70% of the specified average value, the test is considered acceptable.

(c) Where the retest fails to meet the requirements in (a) and (b) above, further retests may be made on a newly welded assembly of different welding conditions, and these new test specimens are to include all tests required for the original assembly, even those which were previously satisfactory.

1.4 Other Inspections and Examinations

1.4.1 Surface inspections

(a) All welded joints of welding structures or test assemblies prior to the preparation of test specimens are to be subjected to a visual inspection after removing of slag and complete cooling, and if deemed necessary, examination by the methods of magnifying glass, liquid penetrant examination or magnetic particle examination for detection of surface defects may be required.

(b) The surface of the finished weld is to be sound, uniform and substantially free from crack, slag inclusion, porosity, undercut, overlap or other injurious defects. Care is to be taken to ensure adequate penetration and fusion. Each cutting section of the welded test assembly is also to be examined to ensure that complete fusion has taken place.

(c) Fillet welds are to be of the size as required by the Rules, but not to be too excessive. Butt welds are to have uniform width and reasonable reinforcement, the reinforcement is not to be less than the minimum requirements nor too excessive.

1.4.2 Macro-etching examinations

(a) The transverse or longitudinal section of the welding joint is to be polished and etched to clearly reveal the weld metal, the fusion line and the heat affected zone (HAZ) for examination.

(b) Macro-etching examination is to include about 10 mm unaffected base metal.

(c) The section of welding joint is to be shown that the weld is free from crack, poor penetration, lack of fusion or any other injurious defects.

1.4.3 Non-destructive examinations

(a) Non-destructive examinations for welding structures or welded test assemblies are to be carried out in the positions required in the Rules preferably by the methods of radiographic examination, ultrasonic examination, liquid penetrant examination or magnetic particle examination, etc. to ascertain the overall soundness of the weld.

(b) Non-destructive examinations for quenched and tempered higher strength rolled steels and extra high strength rolled steels for welding structures or welded test assemblies are to be delayed for minimum of 48 hours, unless heat treatment has been carried out.

(c) Non-destructive examinations are to be performed by qualified operators having level II qualification or above. The qualification and certification of operators for non-destructive examinations are to be in accordance with a recognized certification scheme accepted by the Society.

(d) Radiographic examinations are generally to be used as follows:

(i) For steel welds and structures up to 75 mm in thickness, gamma rays from Iridium 192 (^{192}Ir) radioisotopes or X-rays are to be used.

(ii) For steel welds and structures more than 75 mm in thickness is to be inspected with gamma rays from Cobalt 60 (^{60}Co) radioisotopes.

(iii) Aluminum welds and structures up to 75 mm in thickness is to be inspected with X-rays.

(e) Acceptable recognized standards are to be used in evaluating the non-destructive examinations of the welds.

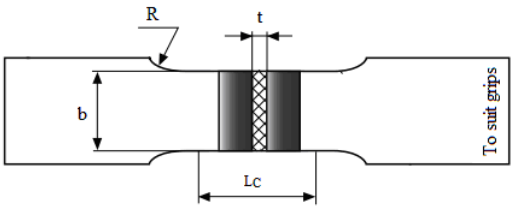

Notes :

t : Thickness of the welded plate, in mm
b : Equal to 12 mm for t ≤ 2 mm
25 mm for t > 2 mm
Lc : Width of the weld + 60 mm
R > 25 mm

Fig. XII 1-1
Dimensions of Transverse Tensile Test Specimens for Butt Weld Test

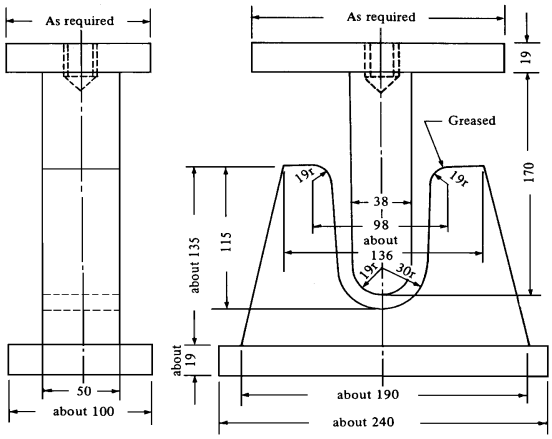

Fig. XII 1-2
Guided Bend Test Jig (Dimensions in mm)

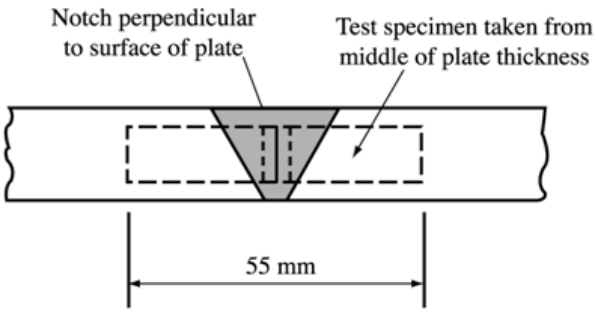

Fig. XII 1-3
Taken Position of Impact Test Specimen

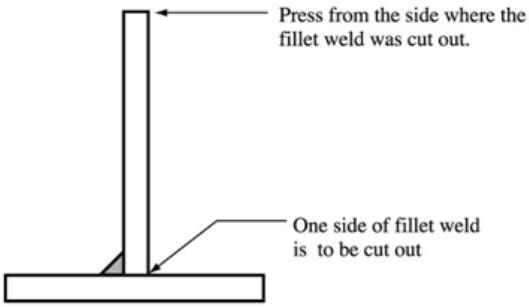

Fig. XII 1-4
Fracture Test of Fillet Weld

Chapter 2
Welding Procedures

2.1 General

2.1.1 Where it is intended to use automatic, semi-automatic or manual welding in shipyard or works, to build welded constructions for special services, or to use new materials in which there is no previous experience, or to use new welding processes, or to alter the items described in the approved welding procedure specification, the procedure to be adopted is to be approved by the Society in advance.

2.1.2 Welding procedure specification subjected to approval is to contain the following information:

(a) applicable extent of the material grades, thickness or dimensions,

(b) edge preparation of joints,

(c) specification of welding materials,

(d) welding position, process and technique,

(e) welding sequence, speed, electric polarity, voltage and current,

(f) preheat, interpass temperature control and post-weld heat treatment, and

(g) non-destructive examinations.

2.1.3 Procedures for the welding of all kinds of joints, with respect to types of welding materials, edge preparation, welding techniques and positions proposed to be adopted are to be established to the satisfaction of the Surveyor. The size of welding materials, current, voltage, rate of deposit and number of runs actually employed, are not to deviate from the established procedures as far as practicable.

2.1.4 The welding procedure specification shall be prepared by the shipyard or works which intends to perform the qualification test of welding procedure and submitted to the Society for approval prior to the tests.

2.1.5 Welding procedures qualified at a shipyard or works are valid for welding work in all shops and sites belong to the shipyard or works under the same technical and quality management.

2.1.6 Welding of the test assemblies and testing of test specimens are to be witnessed by the Surveyor.

2.1.7 If tack welds and/or start and stop points are a condition of the weld process they are to be fused into the joint and are to be included in the test assemblies.

2.2 Approval of Welding Procedures

2.2.1 The welding procedure intended to be accepted by the Society is to be subjected to a satisfactory demonstration welding procedure qualification test in the presence of the Surveyors, unless otherwise specified.

2.2.2 Range of approval welding procedures

The scope of approval of the welding procedures is in accordance with the followings. However, the range of approval differing from the requirements specified in this Chapter may be accepted that it is deemed appropriate by the Society.

(a) Shop primers may have an influence on the quality of fillet welds and is to be considered. Welding procedure qualification with shop primer will qualify those without shop primers, but not vice versa.

(b) For each strength level, welding procedures are considered applicable to the same and lower toughness grades as that tested.

(c) For each toughness grade of normal and higher strength rolled steels, welding procedures are considered applicable to the same and two lower strength levels as that tested. For the high heat input processes over 50 kJ/cm, the welding procedures are considered applicable to that toughness grade tested and one strength below.

(d) For each toughness grade of quenched and tempered rolled steels, welding procedures are considered applicable to the same and one lower strength level as that tested.

(e) The approval welding procedures of quenched and tempered rolled steels does not quality thermo-mechanically rolled steels (TMCP steels) and vice versa.

(f) For weldable C and C-Mn hull steel forgings and steel castings, welding procedures are considered applicable to the same and lower strength level as that tested.

(g) The approval welding procedures of quenched and tempered weldable C and C-Mn hull steel forgings and steel castings does not quality other delivery conditions and vice versa.

(h) Approval for a test made in any welding position is restricted to that position. To qualify a range of welding positions, test assemblies are to be welded for highest heat input welding position and lowest heat input welding position and all applicable tests are to be made on those assemblies.

(i) The approval of welding process is only valid for the welding process used in the welding procedure test. It is not permitted to change from a multi-run to a single run.

(j) Except high heat input processes over 50 kJ/cm, welding materials used in the welding procedure test cover other approved welding materials having the same grade mark including all suffixes specified in Chapter 4 of this Part.

(k) The minimum preheating temperature is not to be less than that used in the welding procedure qualification test.

(l) The maximum interpass temperature is not to be higher than that used in the welding procedure qualification test.

(m) Range of approval for type of welded joints depending on type of welded joints for test assembly is to be specified in Table XII 2-1.

Table XII 2-1
Range of Approval for Type of Welded Joints

Type of welded joint for test assembly				Range of approval
Butt welding	One side	With backing	A	A & C
		Without backing	B	A, B, C & D
	Both side	With gouging	C	C
		Without gouging	D	C & D
Fillet welding			E	E

(n) An approved welding procedure for butt welding is also quality for fillet welding and T-joint with full penetration corresponding to the thickness range and welding position applied for that butt welding.

(o) Generally, the thickness of test assembly for test is to be equal to the maximum thickness of the materials capably applied by the welding procedure for single run welding, vertical-down welding and high heat input processes over 50 kJ/cm. The qualified thickness range for multi-run welding and fillet welding, except vertical-down welding, may be up to double thickness of the test assembly.

(p) The range of approval relating to other variables may be taken according to the requirements that it is deemed appropriate by the Society.

2.3 Butt Welding Tests

2.3.1 Test assemblies

(a) Test assemblies are to be prepared with the same or equivalent material and welded by procedure same as indicated in the welding procedure specification. In case the welding procedure is applicable for welding various grades of materials, test assemblies prepared by representative grades of materials among them may be accepted.

(b) The test assembly is to be made by welding together 2 plates of minimum dimensions specified as following and of sufficient length for preparing all necessary test specimens required.

(i) For manual or semi-automatic welding

minimum width = $3 \times t$, but not less than 150 mm.

minimum length = $6 \times t$, but not less than 350 mm.

(ii) For automatic welding

minimum width = $4 \times t$, but not less than 200 mm.

minimum length = at least 1000 mm.

where t means thickness of plates.

As far as possible, plates are to have a size which can simulate the heat transfer during the production of welding. Plates are to be so cut that the final rolling direction is parallel to the weld, unless otherwise specified.

(c) For butt welding of pipes, the test assembly is to be made by welding together two full sections of pipes having a minimum length of 150 mm. In the case of large pipes with nominal diameter over 300 mm, the test assembly may be made as those for the plate given in 2.3.1(b) above, except the direction of weld joint is to be same as that of actual application.

2.3.2 Welding joints of the test assemblies are to be subjected to a surface inspection and radiographic examination or other non-destructive examinations for whole length to ascertain in compliance with the requirements given in 1.4 of this Part, prior to the preparation of test specimens. The soundness of the weld is to be complied, unless otherwise specified, with ISO 5817 level B for ferrous materials or ISO 10042 level B for aluminum alloy, or equivalent

specifications. In case that any post-weld heat treatment is required or specified, non-destructive testing is to be performed after heat treatment. For quenched and tempered steels with specified minimum yield strength of 420 N/mm^2 and above the non-destructive testing is to be delayed for a minimum of 48 hours, unless heat treatment has been carried out.

2.3.3 Test specimens

(a) The following test specimens are to be prepared from each test assembly as shown in Fig. XII 2-1:
  (i) 2 transverse tensile tests,
  (ii) 2 face and 2 root bending tests when thickness is not more than 20 mm, or 4 side bending tests when thickness is more than 20 mm,
  (iii) 3 sets of three impact test specimens, each set with notches located in center line of weld, in fusion line and in heat affected zone (HAZ) 2 mm from fusion line as shown in Fig. XII 2-2(a), and
  (iv) one macro-section test (Macro-etching + hardness measurements)

(b) Impact tests for following welding procedure qualification tests may be modified as:
  (i) In addition to the requirement of 2.3.3(a)(iii) above, two sets of three impact test specimens, each set with notches located in HAZ 5 mm and 10 mm from fusion line, as shown in Fig. XII 2-3, are to be taken in the case of the welding applied for low temperature service steels, for the structures intended for carrying liquefied gases, or for special steels which are deemed necessary by the Society.
  (ii) In addition to the requirement of 2.3.3(a)(iii) above, other impact test specimens are to be taken in the case of the welding applied for plate thickness more than 50 mm as shown in Fig. XII 2-2(b) or XII 2-4(b).
  (iii) In addition to the requirement of 2.3.3(a)(iii) above, other impact test specimens are to be taken in the case of the welding applied for high heat input processes over 50 kJ/cm as shown in Fig. XII 2-4.
  (iv) For the welding of stainless steel and of aluminium alloys, the impact test is not required.

(c) In the case of a welding procedure combining automatic welding with manual or semi-automatic welding, test specimens are to be taken from the automatically welded part and where deemed necessary by the Society, additional test specimens taken from the manually or semi-automatically welded part may be required.

(d) Hardness measurement specimen is only to be prepared for extra high strength rolled steels and higher strength rolled steel, except AH32, DH32, EH32 & FH32.

2.3.4 Test requirements

(a) The tensile strength of the transverse tensile test is not to be less than the specified requirements for the base material of the test assembly.

(b) Bending tests are to be in compliance with the requirements given in1.3.3 of this Part. Generally, bending angle for test specimens is 180 degree.

(c) Test temperatures and absorbed energy requirements of impact tests are in accordance with the following requirements:
  (i) For normal strength and higher strength rolled steels:

  Test temperature and minimum average value of absorbed energy of impact tests are to be specified in Tables XII 2-2, XII 2-3 & XII 2-4.

Table XII 2-2
Impact Test Temperature for Normal Strength and Higher Strength Rolled Steels

Impact test temperature	Grade of rolled steels
+20 ℃	A, AH32, AH36, AH40& AH47
0 ℃	B, D, DH32, DH36, DH40& DH47
-20 ℃	E, EH32, EH36, EH40& EH47
-40 ℃	FH32, FH36, FH40& FH47

Table XII 2-3
Minimum Average Value of Absorbed Energy for Normal Strength and Higher Strength Rolled Steels, where Thickness of Test Assembly is not Greater Than 50 mm(1),(2)

Grade of rolled steels	For manual and semi-automatic welding		For automatic welding
	Downhand, Horizontal, Overhead	Vertical	
A, B, D, E, AH32, DH32, EH32, FH32, AH36, DH36, EH36 & FH36	47 J	34 J	34 J
AH40, DH40, EH40 & FH40		39 J	39 J

Notes:
(1) These requirements are to apply to test piece of which butt weld is perpendicular to the rolling direction of the plates.
(2) For grade A and B rolled steels, the average absorbed energy on fusion line and in heat affected zone is to be minimum 27J.

Table XII 2-4
Minimum Average Value of Absorbed Energy for Normal Strength and Higher Strength Rolled Steels, where Thickness of Test Assembly is Greater Than 50 mm (See Note)

Grade of rolled steels	For manual and semi-automatic welding		For automatic welding
	Downhand, Horizontal, Overhead	Vertical	
A & B	34 J		
D & E	47 J	38 J	38 J
AH32, DH32, EH32, FH32, AH36, DH36, EH36 & FH36	47 J	41 J	41 J
AH40, DH40, EH40 & FH40	50 J	46 J	46 J
AH47, DH47, EH47 & FH47	53 J		

Note：These requirements are to apply to test piece of which butt weld is perpendicular to the rolling direction of the plates.

(ii) For extra high strength rolled steels, weldable C and C-Mn steel castings and forgings, rolled steels for low temperature service and steels for pressure vessels, the impact test temperature and the average value for absorbed energy are to comply with specified requirement of impact tests for the base material of the test assembly.

(d) Where a welding procedure is used for joining of different toughness grades or different strength level steels, tensile and impact tests may comply with the requirements for the steel of lower toughness grade or lower strength level. In such cases, impact test specimens notched in fusion line and in HAZ are to be taken from the side of the joint with lower toughness grade of steel.

(e) The transverse section of welding joint is to be subjected to a satisfactory macro-etching examination in compliance with the requirements given in 1.4.2 of this Part.

(f) Hardness test is required for steel with specified minimum yield strength 355 N/mm^2. At least two rows of indentations in the weld metal, the heat affected zone (both sides) and the base metal (both sides) are to be carried out in accordance with Fig. XII 2-5 and each row of indentations is to be at least 3 individual indentations in the weld metal, the heat affected zone (both sides) and the base metal (both sides).

The results from the hardness test are not to exceed the followings:

(i) Steels with a specified minimum yield strength not more than 420 N/mm^2 : 350 HV10.

(ii) Steels with a specified minimum yield strength more than 420 N/mm^2, but not more than 690 N/mm^2 : 420 HV10.

2.4 Fillet Welding Tests

2.4.1 Test assemblies and specimens

(a) A test assembly and test specimen as shown in Fig. XII 2-6 is to be prepared with the same or equivalent materials, the size of the fillet weld and welding conditions are to be the same as those for actual applications except that only one side of the fillet is to be welded.

(b) Abutting members of the test assembly are to be straight and in intimate contact and securely tacked at ends before the fillet weld is made.

(c) For manual and semi-automatic welding, a stop/restart is to be included in middle of the test assembly.

2.4.2 Test requirements

(a) Surface inspections

(i) The test assembly, upon completion of welding, is to be subjected to a satisfactory surface inspection in compliance with the requirements given in 1.4.1 of this Part.

(ii) Liquid penetrant examination or magnetic particle examination for quenched and tempered higher strength rolled steels and extra high strength rolled steels for welding structures or welded test assemblies are to be delayed for minimum of 48 hours, unless heat treatment has been carried out.

(iii) The soundness of the weld is to be complied, unless otherwise specified, with ISO 5817 level B for ferrous materials or ISO 10042 level B for aluminium alloy, or equivalent specifications.

(b) Macro-etching examinations

Two transverse sections cut within 50 mm from both ends of the test assembly are to be subjected to a satisfactory macro-etching examination in compliance with the requirements given in 1.4.2 of this Part.

(c) Hardness test

(i) One hardness measurement specimen is only to be prepared for extra high strength rolled steels and higher strength rolled steel, except AH32, DH32, EH32 & FH32.

(ii) Hardness test is to be measured at the position shown in Fig. XII 2-7. Each row of indentations is to be at least 3 individual indentations in the weld metal, the heat affected zone (both sides) and the base metal (both sides).

The results from the hardness test are not to exceed the following:

(1) Steels with a specified minimum yield strength not more than 420 N/mm^2 : 350 HV10

(2) Steels with a specified minimum yield strength more than 420 N/mm^2, but not more than 690 N/mm^2 : 420 HV10

(d) Fracture tests

The remaining section of the test assembly is to be subjected to a satisfactory fracture test in compliance with the requirements given in 1.3.5 of this Part.

2.5 T-joints with Full Penetration Welding Tests

2.5.1 Test assemblies and specimens

(a) The test assemblies and test specimens as shown in Fig. XII 2-8 are to be prepared with the same or equivalent material and welded by same procedure as indicated in the welding procedure specification.

(b) The tack welds of test assemblies are to be the same procedure as actual work.

2.5.2 Test requirements

(a) Surface inspections

The test assembly, upon completion of welding, is to be subjected to a satisfactory surface inspection in compliance with the requirements given in 1.4.1 of this Part.

(b) Non-destructive examinations

Welding joints of the test assemblies are to be subjected to a radiographic examination or other non-destructive examinations for whole length to ascertain in compliance with the requirements given in 1.4.3 of this Part, prior to the preparation of test specimens.

(c) The soundness of the weld is to be complied, unless otherwise specified, with ISO 5817 level B for ferrous materials or ISO 10042 level B for aluminum alloy, or equivalent specifications.

(d) Macro-etching examinations

Two transverse sections cut within 50 mm from both ends of the test assembly are to be subjected to a satisfactory macro-etching examination in compliance with the requirements given in 1.4.2 of this Part.

(e) Hardness tests

(i) One hardness measurement specimen is only to be prepared for extra high strength rolled steels and higher strength rolled steel, except AH32, DH32, EH32 & FH32.

(ii) Hardness test is to be measured at the position shown in Fig. XII 2-9. Each row of indentations is to be at least 3 individual indentations in the weld metal, the heat affected zone (both sides) and the base metal (both sides).

The results from the hardness test are not to exceed the following:

(1) Steels with a specified minimum yield strength not more than 420 N/mm^2 : 350 HV10

(2) Steels with a specified minimum yield strength more than 420 N/mm^2, but not more than 690 N/mm^2 : 420 HV10

2.6 Retests and Additional Tests

2.6.1 If the test assembly fails to comply with any of the requirements for surface inspection or non-destructive examination, one further test assembly is to be welded under the same welding conditions and subjected to pass all test items as specified. If this additional test assembly does not comply with the relevant requirements, the welding procedure specification is to be regarded as not qualified and a modification of the welding procedure specification shall be approved prior to a new qualification test.

2.6.2 If the result of a tensile test, bend test or impact test fails to meet the requirements, additional test is to be carried out in compliance with the requirements given in 1.3.7 of this Part. If either of these additional test specimens does not comply with the relevant requirements, the welding procedure specification is to be regarded as not qualified and a modification of the welding procedure specification shall be approved prior to a new qualification test.

2.6.3 If the result of a macro-etching examination fails to meet the requirements, one further test assembly is to be welded under the same welding conditions and subjected to pass all test items as specified. If this additional test assembly does not comply with the relevant requirements, the welding procedure specification is to be regarded as not qualified and a modification of the welding procedure specification shall be approved prior to a new qualification test.

2.6.4 If a single hardness value exceed the maximum values allowed, additional hardness test is to be carried out on the reverse of the test specimen or after sufficient grinding of the test surface. If additional hardness test does not comply with the relevant requirements, the welding procedure specification is to be regarded as not qualified and a modification of the welding procedure specification shall be approved prior to a new qualification test.

2.7 Welding Procedure Qualification, Copper Alloy

2.7.1 Pipes, plates, castings and other product forms, not including propeller castings

WPS for pipes and plates shall be qualified in accordance with ISO 15614-6 unless otherwise agreed by the Society.

2.7.2 Copper alloy castings for propellers

(a) General requirements

(i) Companies wishing to carry out welding work on propellers must have at their disposal the necessary workshops, lifting gear, welding equipment, preheating and, where necessary, annealing facilities, testing devices as well as certified welders and expert welding supervisors to enable them to perform the work properly. Proof shall be furnished to the Surveyor that these conditions are satisfied before welding work begins.

(ii) The company concerned shall prepare and submit to the Society a detailed welding specification covering the weld preparation, welding procedure, filler metals, preheating and post weld heat treatment and inspection procedures.

(iii) Before welding is started, Welding Procedure Qualification Test are to be carried out and witnessed by the Surveyors. Each welder/operator is to demonstrate his ability to carry out the proposed welding using the same process, consumable and position which are to be used in actual welding work, the scope of tests is specified in 2.7.2(c).

(iv) Defects to be repaired by welding are to be ground to sound material according to the requirements as given in 10.3.6 of Part XI. To ensure complete removal of the defects the ground areas are to be examined by dye penetrant methods in the presence of the Surveyor. The welding grooves are to be prepared in such a manner which will allow a good fusion of the groove bottom.

(b) Welding procedure

(i) Metal arc welding is recommended for all types of repair on bronze propellers. For CU1 and CU2 material thickness less than 30 mm, gas welding may give a satisfactory weldment. Arc welding with coated electrodes and gas-shielded metal arc process (GMAW) are generally to be applied. Argon-shielded tungsten welding (GTAW) should be used with care due to the higher specific heat input of this process. Recommended filler metals, pre-heating and stress relieving temperatures are listed in Table XII 2-5.

(ii) Adequate pre-heating is to be carried out with care to avoid local overheating, pre-heating temperatures are listed in Table XII 2-5.

(iii) All propeller alloys are generally to be welded in down-hand (flat) position. Where this cannot be done, gas-shielded metal arc welding should be carried out. The section to be welded is to be clean and dry. Flux-coated electrodes are to be dried before welding according to the maker's instructions.

To minimize distortion and the risk of cracking, interpass temperatures are to be kept lower than the values specified in Table XII 2-5. This is especially the case with CU 3 alloys. Slag, undercuts and other defects are to be removed before depositing the next run.

(iv) All welding work is to be carried out preferably in the shop free from draughts and influence of the weather.

(v) With the exception of alloy CU 3 (Ni-Al-bronze) all welds are to be stress relief heat treated, in order to avoid stress corrosion cracking. However, stress relief heat treatment of alloy Cu 3 propeller castings may be required after major repairs in zone B (and specially approved welding in Zone A) or if a welding consumable susceptible to stress corrosion cracking is used. In such cases the propeller is to be either stress relief heat treated in the temperature 450 to 500°C or annealed in the temperature range 650-800°C, depending on the extent of welding work, as given in Table XII 2-5.

(vi) The soaking times for stress relief heat treatment of copper alloy propellers should be in accordance with Table XII 2-6. The heating and cooling is to be carried out slowly under controlled conditions. The cooling rate after any stress relieving heat treatment shall not exceed 50°C/h until the temperature of 200°C is reached.

(c) Welding procedure qualification test

(i) General

The qualification test is to be carried out with the same welding process filler metal, preheating and stress-relieving treatment as those intended applied by the actual welding work.

(ii) Test sample

A test sample of minimum 30 mm thickness is to be welded in down-hand (flat) position. The test specimens to be prepared and their dimensions are shown in Fig. XII 2-10.

(iii) Qualification testing

(1) Non-destructive testing
After completion, the weldment is to be 100% tested by a dye-penetrant method. No cracks are permitted.

(2) Macro-etching
Three macro-etch samples should be prepared (see Fig. XII 2-10). A suitable etchant for this purpose is:

5 g	iron (III) chloride
30 ml	hydrochloric acid (cone)
100 ml	water.

Pores greater than 3 mm and cracks are not permitted.

(3) Mechanical testing
Two tensile tests should be prepared as specified in 1.3.2. The requirements to the tensile strength, as given in Table XII 2-7, should be met. Alternatively tensile test specimens according to recognized standards may be used as agreed by the Society.

2.8 Test Record

2.8.1 Welding conditions for test assemblies and test results are to be recorded in welding procedure test record.

2.8.2 The results of assessing each test piece (including repeat tests) is to be contained in the test report for each welding procedure test. The relevant items listed for the WPS of these requirements are to be included.

2.8.3 The test report that the test piece was made according to the particular welding procedure is to be signed by the Surveyor witnessing the test and is to include the Society's identification.

Table XII 2-5
Recommended Filler Metal and Heat Treatment

Alloy type	Filler metal	Preheat temperature In degree [min]	Interpass temperature degree [max]	Stress relief temperature degree	Hot straightening Temperature degree
CU1	Al-bronze(1) Mn-bronze	150	300	350-500	500-800
CU2	Al-bronze Ni-Mn-bronze	150	300	350-550	500-800
CU3	Al-bronze Ni-Al-bronze(2) Mn-Al-bronze	50	250	450-500	700-900
CU4	Mn-Al-bronze	100	300	450-600	700-850

Notes:
(1) Ni-Al-bronze and Mn-Al-bronze are acceptable.
(2) Stress relieving not required, if filler metal Ni-Al-bronze is used.

Table XII 2-6
Soaking Times for Stress Relief Heat Treatment of Copper Alloy Propellers

Stress relief temperature in degrees	Alloy grade CU1 and CU2		Alloy grade CU3 and CU4	
	Hours per 25 mm thickness	Max. recommended total time hours	Hours per 25 mm thickness	Max. recommended total time hours
350	5	15	-	-
400	1	5	-	-
450	1/2	2	5	15
500	1/4	1	1	5
550	1/4	1/2	1/2 (see Note)	2 (see Note)
600	-	-	1/4 (see Note)	1 (see Note)

Note: 550 and 600 degrees only applicable for CU 4 alloys.

Table XII 2-7
Required Tensile Strength Values

Alloy type	Tensile strength N/mm^2, min
CU1	370
CU2	410
CU3	500
CU4	550

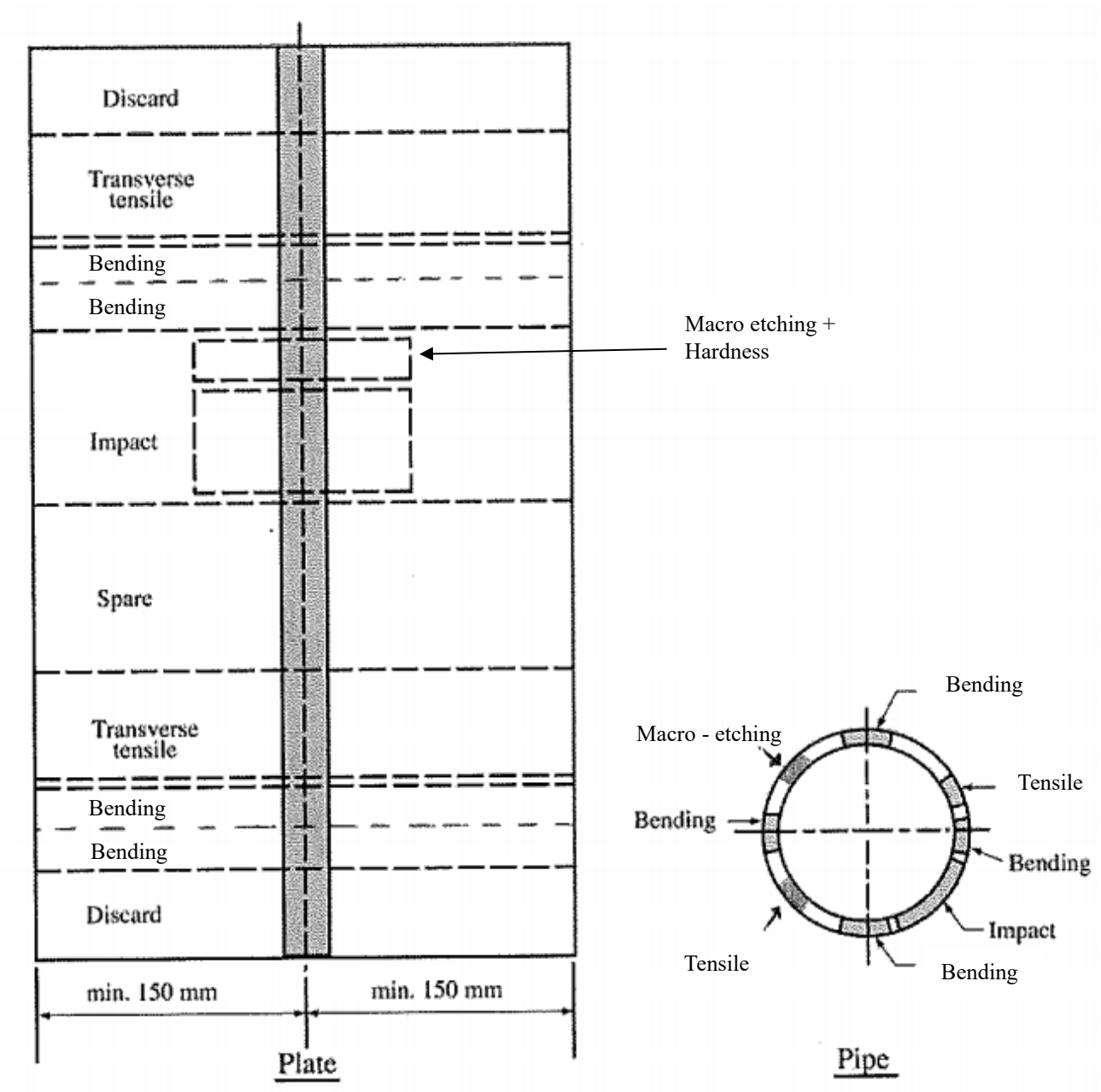

Fig. XII 2-1
Butt Welding Test Assembly and Test Specimens for Welding Procedure Approval

(a) t ≤ 50 mm(1)

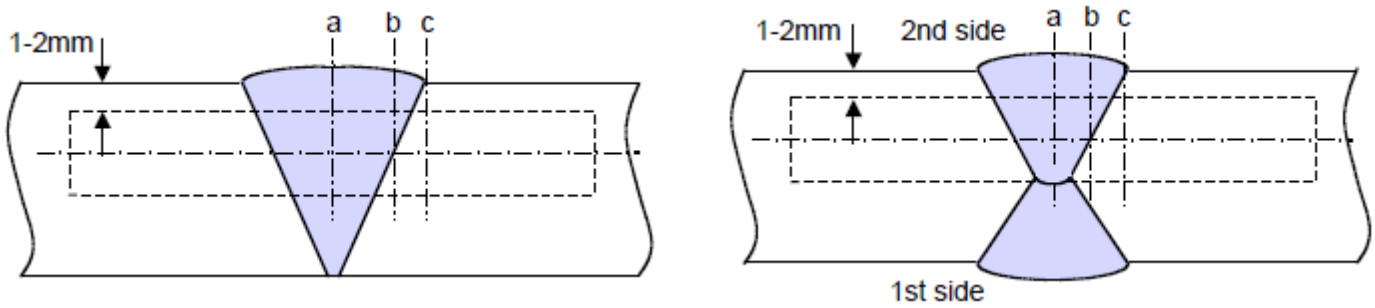

Note:

(1) For one side single run welding over 20 mm notch location "a" is to be added on root side.

(b) t > 50 mm

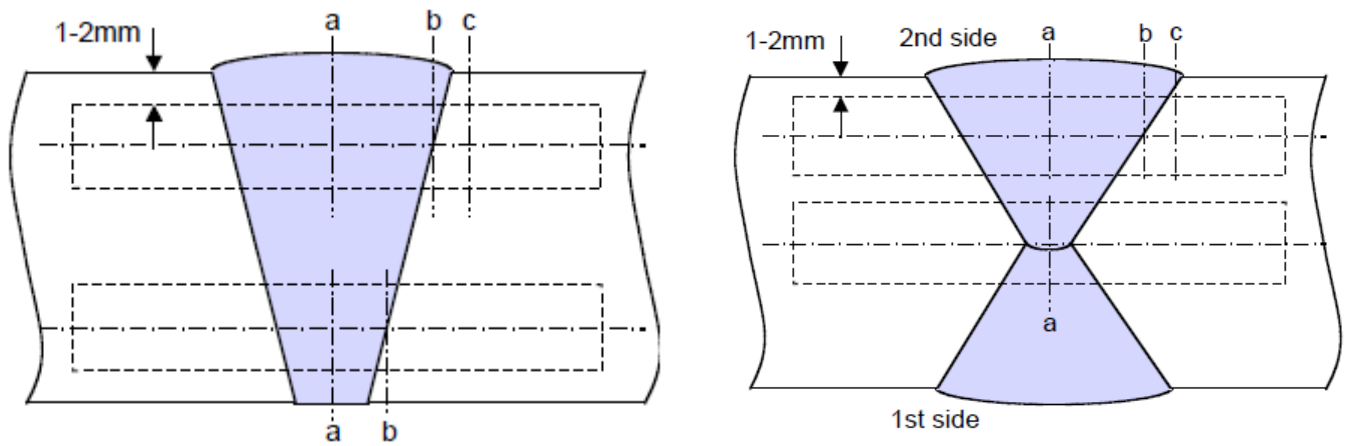

Notch locations:

a : Center of weld "WM"

b : On fusion line "FL"

c : In HAZ, 2 mm from fusion line

Fig. XII 2-2
Notch Locations of Impact Test Specimens for Butt Welding Procedure Approval

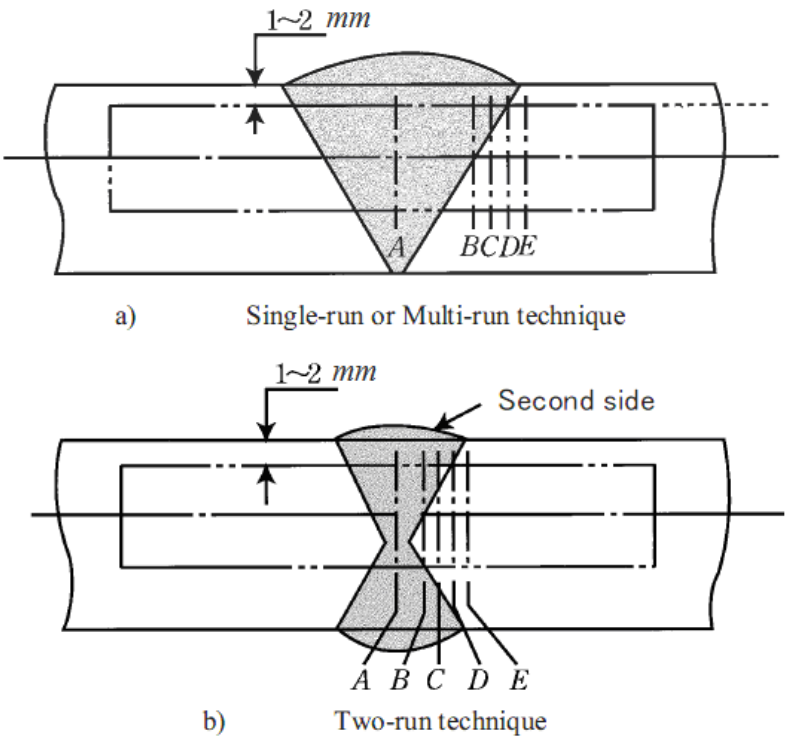

Notch location:

A : Center of weld "WM"

B : On fusion line "FL"

C : In HAZ, 2*mm* from fusion line

D : In HAZ, 5*mm* from fusion line

E : In HAZ, 10*mm* from fusion line

Fig. XII 2-3
Notch Locations of Impact Test Specimens for
Butt Welding Procedure Approval for Low Temperature Service Rolled Steels

(a) t ≤ 50 mm(1)

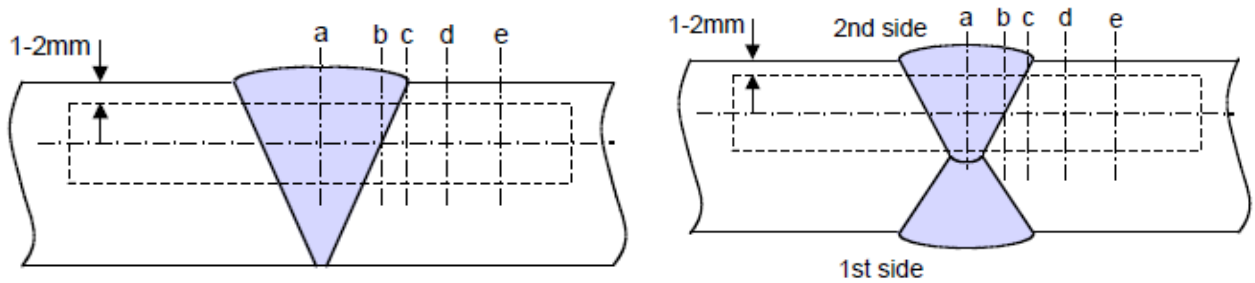

Note:
(1) For one side welding with thickness over 20 mm notch locations "a", "b" and "c" are to be added on root side.

(b) t > 50 mm

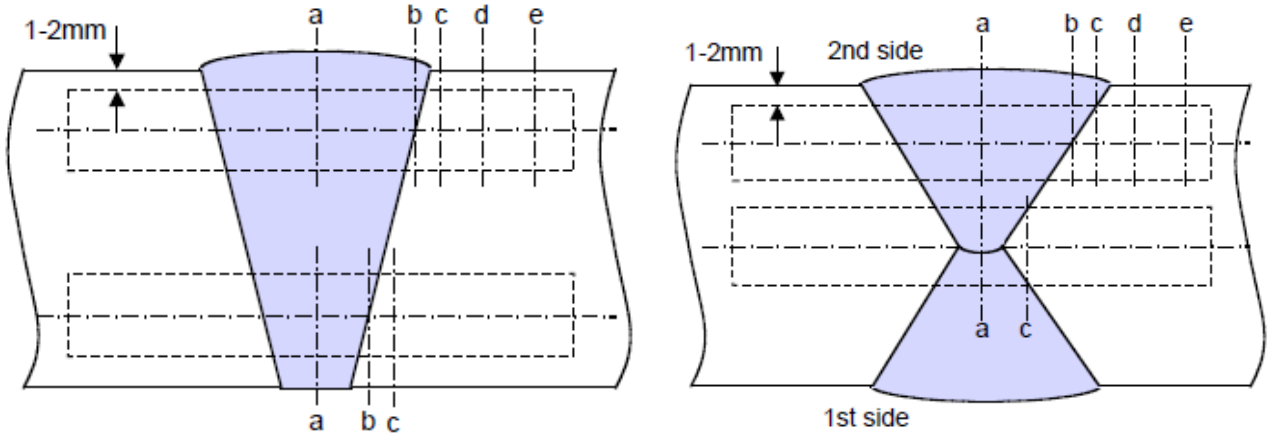

Notch locations:
a : Center of weld "WM"
b : On fusion line "FL"
c : In HAZ, 2 mm from fusion line
d : In HAZ, 5 mm from fusion line
e : In HAZ, 10 mm from fusion line in case of heat input > 200 kJ/cm

Fig. XII 2-4
Notch Locations of Impact Test Specimens for
Butt Welding Procedure Approval for Welding Heat Input Over 50 kJ/cm

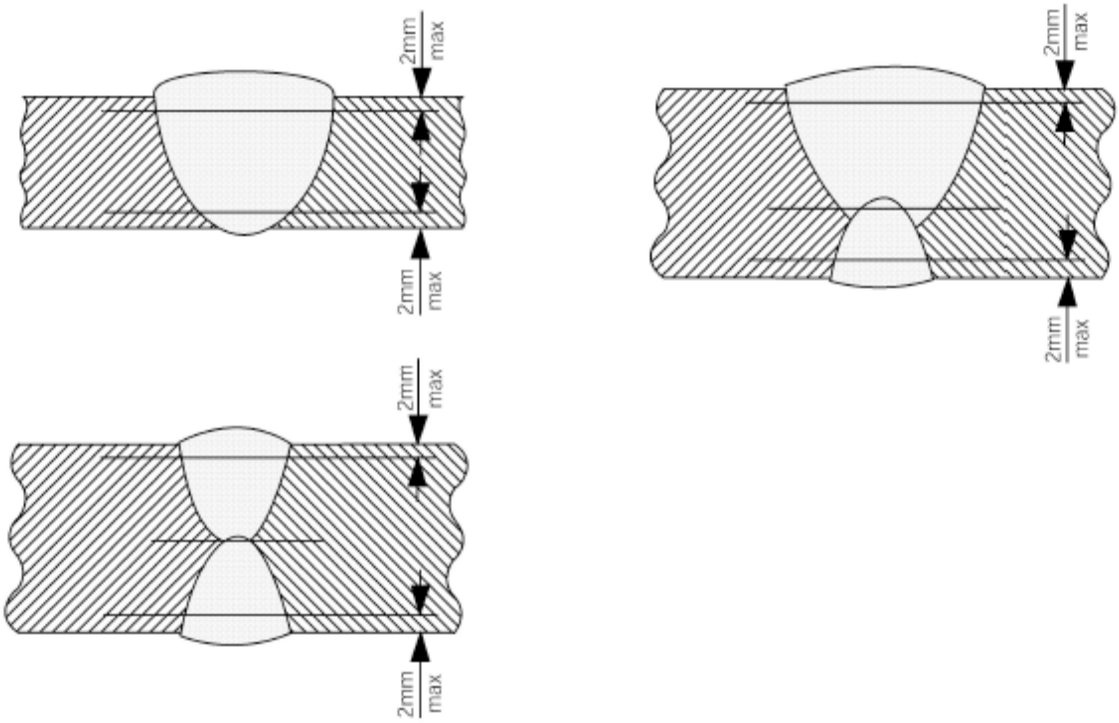

Note: Measuring intervals are to be 1 mm in the heat affected zone.

Fig. XII 2-5
Hardness Test for Butt Welding Procedure Approval

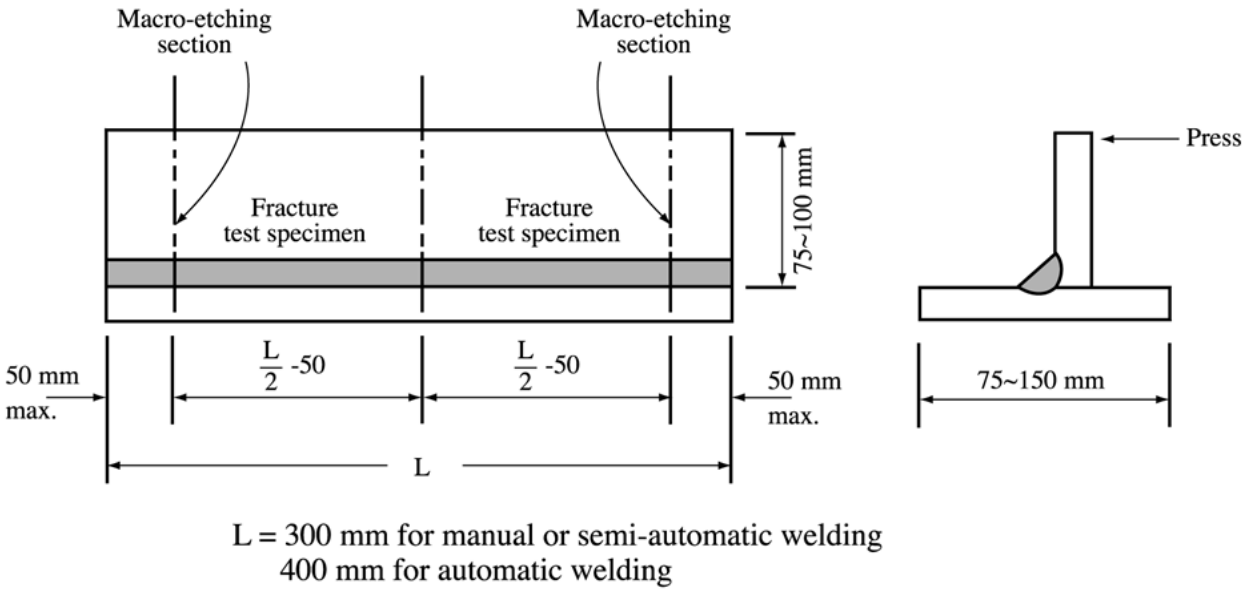

Fig. XII 2-6
Fillet Weld Test Assembly and Test Specimens for Welding Procedure Approval

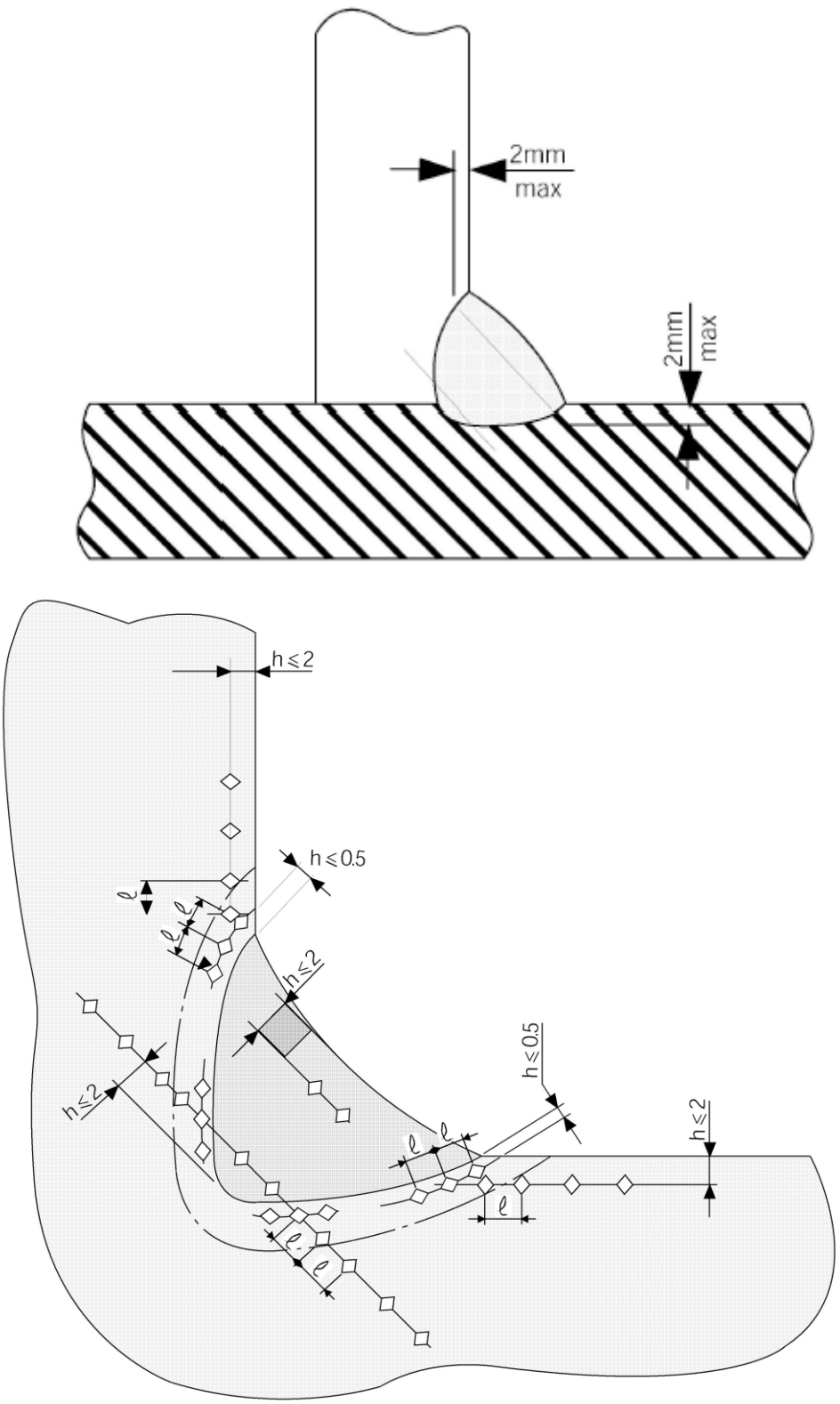

Note : Measuring intervals are to be 1 mm in the heat affected zone.

Fig. XII 2-7
Hardness Test for Fillet Welding Procedure Approval

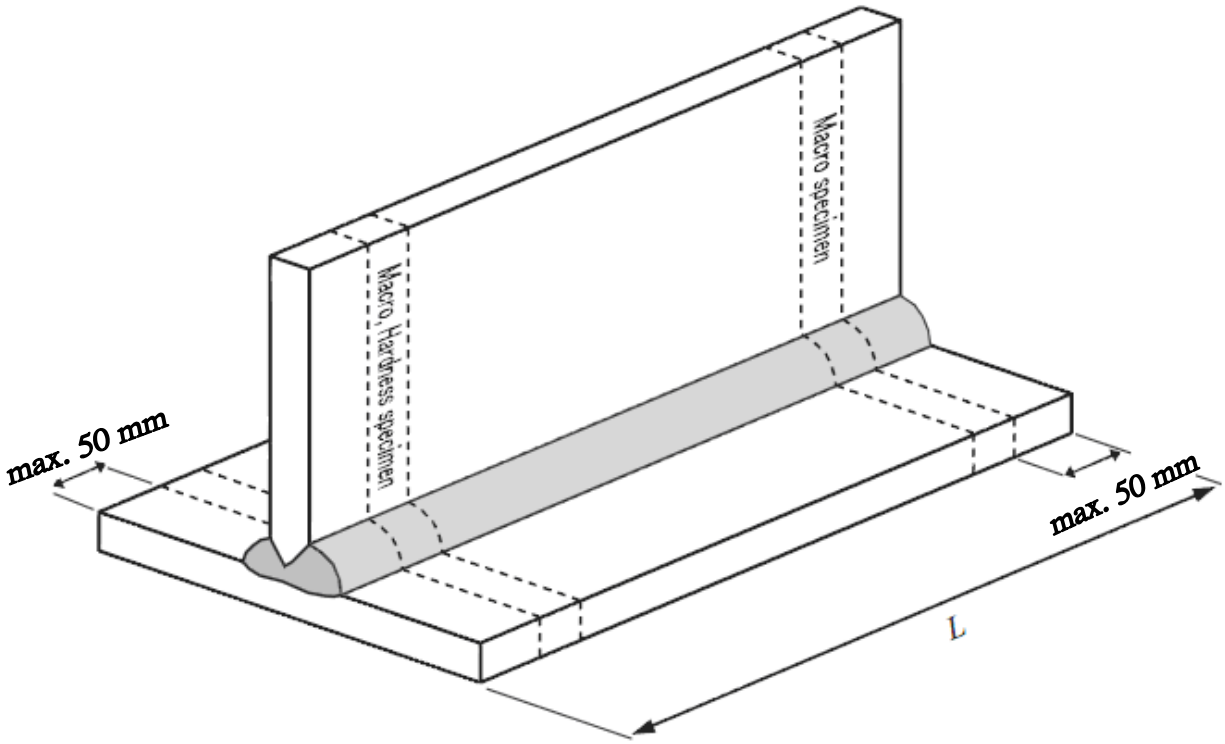

Note: The length of test assembly L is not less than 350 mm.

Fig. XII 2-8
T-joints with Full Penetration Weld Test Assembly and Test Specimens for Welding Procedure Approval

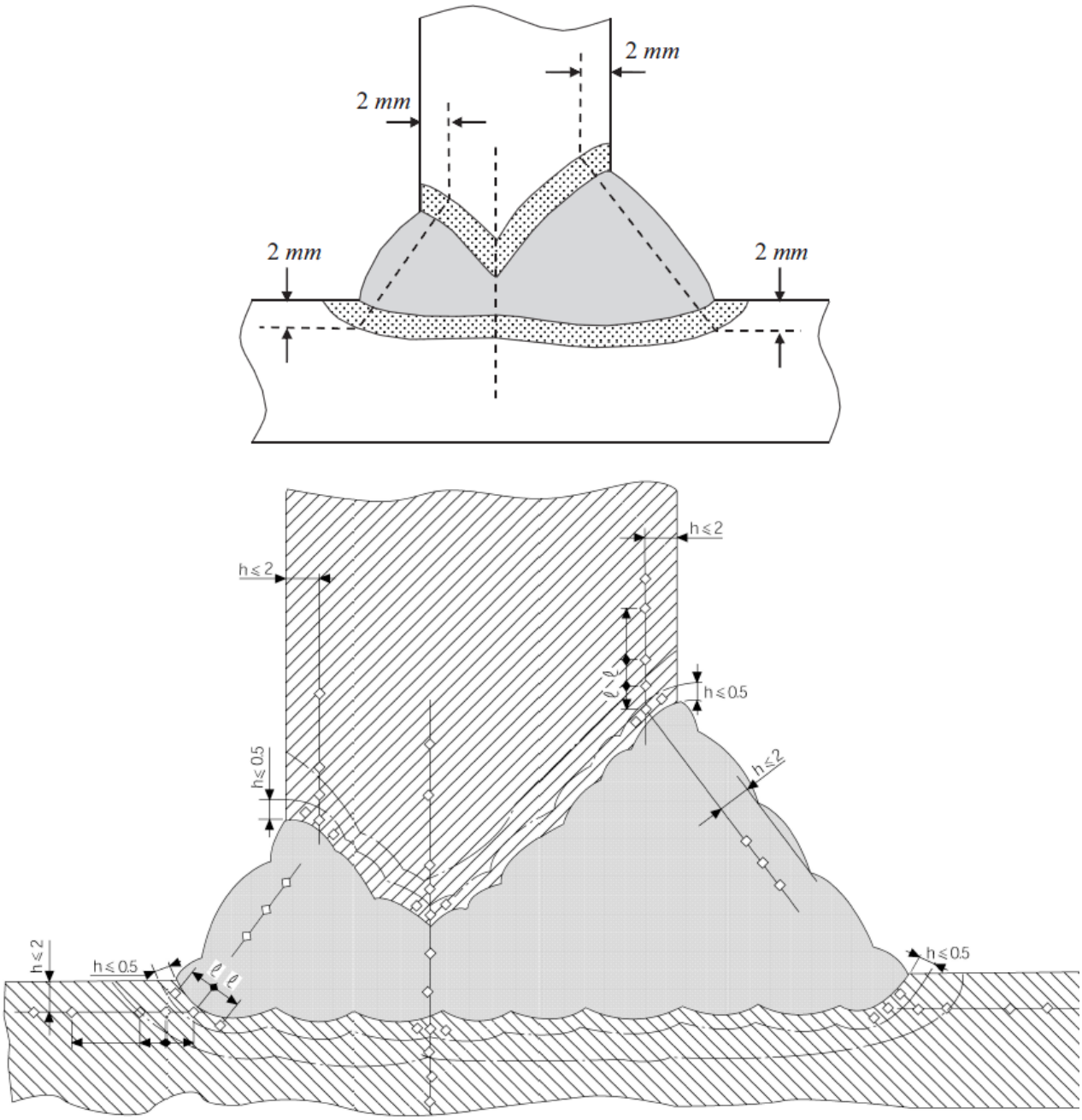

Note : Measuring intervals are to be 1 mm in the heat affected zone.

Fig. XII 2-9
Hardness Test for T-joints with Full Penetration Welding Procedure Approval

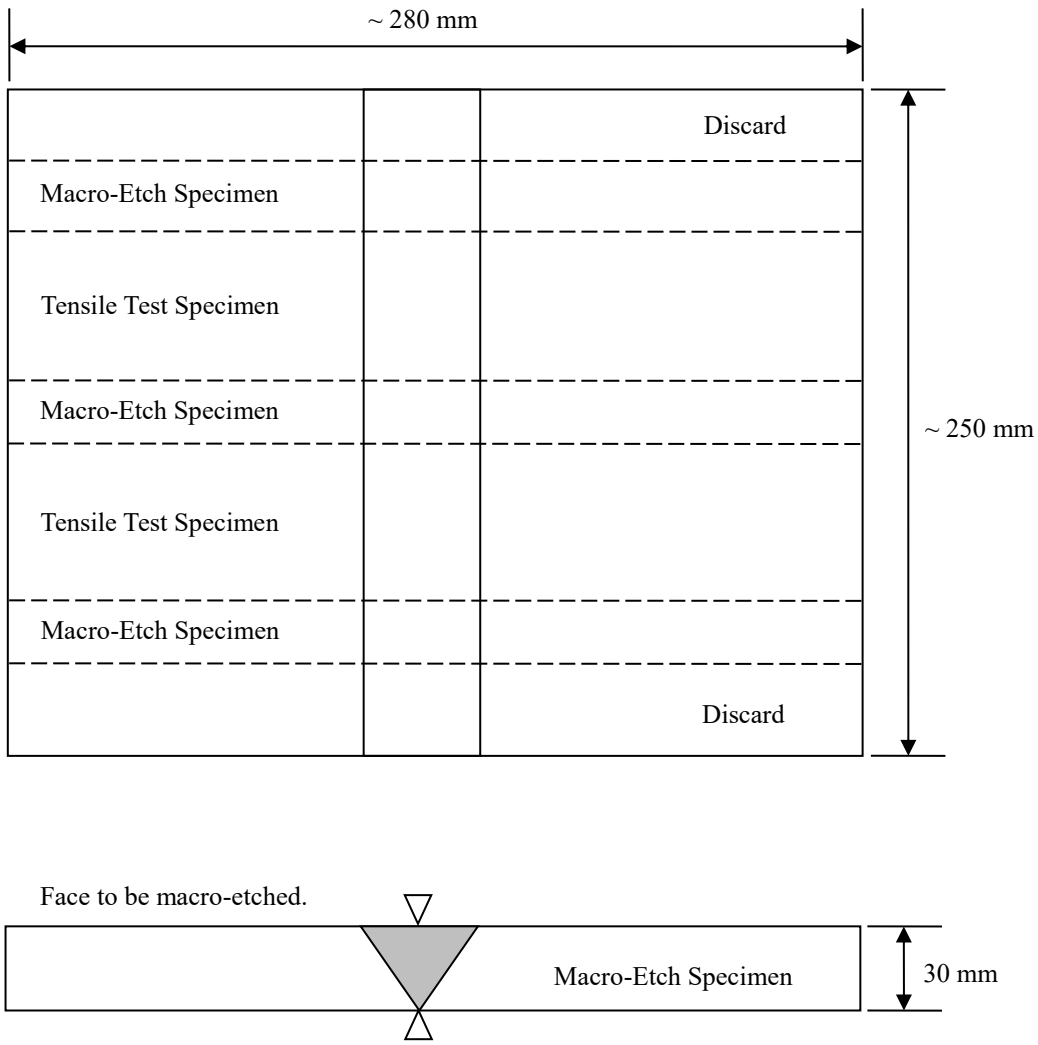

Fig. XII 2-10
Test Specimen for Welding Procedure and Welder's Qualification of Copper Alloy

Chapter 3

Welder Qualifications and Control of Welding Operations

3.1 Control of Welding Operations

3.1.1 The welding is to be carried out in shipyard or other works recognized by the Society. Such welding shops are to have suitable workshop, welding facilities, adequate protection against weather and other necessary equipment and to prove their qualification for the welding operation in a satisfactory manner.

3.1.2 The Surveyor is to satisfy himself that all welders and welding operators are properly qualified and are experienced in the work proposed and in the proper use of the welding processes and procedures to be followed. The Surveyor is to satisfy himself as to the employment of a sufficient number of skilled supervisors to ensure a thorough supervision and control of all welding operations.

3.1.3 The shipyards or other works are to have a proper management and control system for the employed welders. Sufficient information containing the training history, experience, dates and results of qualification tests, renewal tests, requalification tests, etc. of the welders is to be prepared for the Surveyor's examination at any time.

3.2 Welder and Welding Operator Qualifications

3.2.1 Each welder and welding operator who intends to engage in the welding work specified in this Part is to pass the qualification tests required according to the applicable welding procedures and kinds of material to be welded and to be furnished with the Qualification Certificate issued by the Society.

3.2.2 The requirements of welder qualification given in this Chapter are applicable to welders who intend to weld the weldable materials as specified in Chapters 3, 4, 5, 6, 7, 8, 9 and 11 (aluminum alloy) of Part XI or their equivalents in manual or semi-automatic welding practice.

3.2.3 The welding operator responsible for setting up and/or adjustment of fully mechanized and automatic equipment, such as submerged arc welding, gravity welding, electro-gas welding and MAG welding with auto-carriage, etc., must be qualified whether he operates the equipment or not. However a welding operator, who solely operates the equipment without responsibility for setting up and/or adjustment, does not need qualification provided that he has experience of the specific welding work concerned and the production welds made by the operators are of the required quality.
The qualification test and approval range of the welding operator are left to the discretion of the Society with reference to ISO 14732.

3.2.4 For welders and welding operators who have been approved by other recognized Classification Societies or appropriate Organizations, e.g. accredited or nationally approved certification bodies, with the qualification equivalent to the requirements of this Chapter may be accepted by the Society without further testing for the relevant qualification on a case by case basis.

3.2.5 Welders or welding operators qualified in accordance with national or international welder qualification standards may also be engaged in welding of hull structures at the discretion of the Society provided that the qualification testing, range of approval and revalidation requirements are considered equivalent to this Chapter.

3.2.6 The qualification test requirements for welders intended to engage in the welding works of the special materials and the welding work not specified in this Chapter are to be in accordance with the specific approval given by the Society.

3.2.7 Range of qualification of welders

(a) A welder is to be qualified in relation to the following variables of welding:
(i) base metal
(ii) welding consumables type
(iii) welding process
(iv) type of welded joint
(v) plate thickness or outside diameter of pipe
(vi) welding position

(b) Base metals
Base metals for qualification of welders or welding operators are combined into one group with a specified minimum yield strength $R_{eH} \leq 460$ N/mm^2. The welding of any one metal in this group covers qualification of the welder or welding operator for the welding of all other metals within this group.

(c) Welding consumables type
For manual metal arc welding, qualification tests are required using basic, acid or rutile covered electrodes. The type of covered electrodes (basic, acid or rutile) included in the range of approval is left at the discretion of the Society.
Welding with filler material qualifies for welding without filler material, but not vice versa.

(d) Welding process
The welding processes for welder's qualification are to be classified in Table XII 3-1 as below.
Each testing normally qualifies only for one welding process. A change of welding process requires a new qualification test.

Table XII 3-1
Welding Processes for Welder's Qualification

Symbol(1)	Welding process in actual welding works		ISO 4063
M	Manual welding	Manual metal arc welding (metal arc welding with covered electrode)	111
S	Semi-automatic welding / Partly mechanized welding	Metal inert gas (MIG) welding	131
		Metal active gas (MAG) welding Flux cored arc (FCA) welding	135, 138(2) 136(2)
T	TIG welding	Tungsten inert gas (TIG) welding	141

Notes:
(1) **M** means manual welding.
S means semi-automatic welding or partly mechanized welding.
T means TIG welding.
(2) The Society may require separate qualification for solid wires, metal-cored wires and flux-cored wires as follows:
- A change from MAG welding with solid wires (135) to that with metal cored wires (138), or vice versa is permitted.
- A change from a solid or metal cored wire (135/138) to a flux cored wire (136) or vice versa requires a new welder qualification test.

(e) Type of welded joint
The types of welded joint for welder's qualification are to be classified as shown in Table XII 3-2 in accordance with the qualification test.

Table XII 3-2
Types of Welded Joint for Welder's Qualification

Type of welded joint used in the test assembly for the qualification test				Type of welded joint qualified
Butt weld	Single sided weld	With backing	A	A, C, E, F
		Without backing	B	A, B, C, D, E, F
	Double sided weld	With gouging	C	A, C, E, F
		Without gouging	D	A, C, D, E, F
Fillet weld	-	Multi-run	E	E, F
	-	Single-run	F	F

(f) For fillet welding, welders who passed the qualification tests for multi-layer technique welding can be deemed as qualified for single layer technique, but not vice versa.

(g) Plate thickness or outside diameter of pipe

The qualified plate thickness range arising from the welder qualification test plate thickness is shown in Table XII 3-3 as below. The range of qualification for outside diameter of pipe is to be classified as given in Table XII 3-4 as below.

Table XII 3-3
Plate Thicknesses for Welder's Qualification

Thickness of test assembly T (mm)	Qualified plate thickness range t (mm)
$T < 3$	$T \leq t \leq 2T$
$3 \leq T < 12$	$3 \leq t \leq 2T$
$12 \leq T$	$3 \leq t$

Table XII 3-4
Range of Qualification for Outside Diameter of Pipe

Outside diameter(1) of test assembly D (mm)	Range of outside diameter applicable to actual welding work d (mm)
$D \leq 25$	$D \leq d \leq 2D$
$25 < D$	$0.5D^{(2)} \leq d$

Notes:

(1) For non-circular sections, D is the dimension of the smaller side.

(2) Lower limit of 0.5D is not to be less than 25 mm.

(h) Welding positions

The welding positions qualified as a result of the actual welding position used in a satisfactory welder's qualification test, are shown in Table XII 3-5, Table XII 3-6 and Table XII 3-7 as below. Diagrams showing the definitions of weld position used in Table XII 3-5 and Table XII 3-6 are shown in Fig. XII 3-1 of this Chapter. Diagrams showing the definitions of weld position used in Table XII 3-7 are shown in Fig. XII 3-2 of this Chapter.

The Society may require a qualification test with fillet welding for welders who are employed to perform fillet welding only. Welders engaged in welding of T joints with partial or full penetration are to be qualified for butt welding.

Table XII 3-5
Qualified Welding Positions When Testing with Butt Welding

Qualification Test Position with butt weld	Qualified welding positions in actual welding works	
	Butt welds	Fillet welds
PA	PA	PA, PB
PC	PA, PC	PA, PB, PC
PE	PA, PC, PE	PA, PB, PC, PD, PE
PF	PA, PF	PA, PB, PF
PG	PG	PG

Table XII 3-6
Qualified Welding Positions When Testing with Fillet Welding

Qualification Test Position with fillet weld	Qualified welding positions in actual welding works
	Fillet welds
PA	PA
PB	PA, PB
PC	PA, PB, PC
PD	PA, PB, PC, PD, PE
PE	PA, PB, PC, PD, PE
PF	PA, PB, PF
PG	PG

Table XII 3-7
Qualified Welding Positions for Pipes

Welding position applied for test assembly		Welding position applicable to actual welding work	
		Butt Welding	Fillet Welding
Butt welding	PA	PA	PA, PB
	PC	PA, PC	PA, PB
	PH	PA, PH	PA, PB, PD, PH
	PJ	PA, PJ	PA, PB, PD, PJ
Fillet welding	PA	-	PA
	PB	-	PA, PB
	PD	-	PA, PB, PD
	PH	-	PA, PB, PD, PH
	PJ	-	PA, PB, PD, PJ

(i) A welder qualified for butt or fillet welding can be engaged in tack welding for the welding process and position corresponding to those permitted in his certificate.
Alternatively, welders engaged in tack welding only can be qualified on the test assemblies shown in Fig. XII 3-6 or Fig. XII 3-7 of this Chapter.

3.3 Welder's Qualification Tests

3.3.1 The application for Welder's Qualification tests is generally to be made to the Society by the shipyard or works where welders are employed. The applicant is to prepare the necessary welding equipment and test or examination appliances for the qualification tests in a satisfactory manner. The preparations of test assemblies and test specimens and the mechanical tests or other examinations are to be carried out in the presence of the Surveyor.

3.3.2 The kind of qualification is to be classified according to the welding process as follows:

(a) The qualification for manual, semi-automatic and TIG welding processes is to consist of variables of welding specified as follows:
  (i) Welding process, see Table XII 3-1 of this Chapter.
  (ii) Types of welded joint, see Table XII 3-2 of this Chapter.
  (iii) Base matel, as specified in 3.3.4 or 3.3.5 of this Chapter.
  (iv) Welding consumables, as specified in 3.3.4 or 3.3.7 of this Chapter.

(v) Range of plate thickness (see Table XII 3-3) or outside diameter of pipe (see Table XII 3-4 of this Chapter).

(vi) Welding positions, see Table XII 3-5 to Table 3-7 of this Chapter.

(b) The qualification for tack welding is to consist of the variables of welding specified as follows:

(i) Welding process, see Table XII 3-1 of this Chapter.

(ii) Types of welded joint, such as butt welding or fillet welding.

(iii) Base metal, as specified in WPS or pWPS.

(iv) Welding consumables, as specified in WPS or pWPS.

(v) welding positions, see Table XII 3-5 to Table 3-7 of this Chapter.

3.3.3 The welder qualification tests and renewal tests are shown in Table XII 3-8 of this Chapter.

3.3.4 Test assemblies for plate welding

(a) Test assemblies are to be prepared in accordance with the requirements given in Table XII 3-8 of this Chapter and shown in Fig. XII 3-3 to Fig. XII 3-5 of this Chapter. Plates for preparation of the test assembly are to be of materials as specified in Chapter 3, 4, 6, 7, 8, 9 or 11 (aluminum alloy) of Part XI or their equivalents.

(b) For the testing material used for hull structural steels, testing material and welding consumables shall conform to one of the following requirements or to be of equivalent grade approved by the Society.

(i) Testing material

(1) Hull structural steels specified in Chapter 3 of Part XI.

(2) Hull structural forged steels specified in Chapter 8 of Part XI.

(3) Hull structural cast steels specified in Chapter 6 and 7 of Part XI.

(4) Hull structural steels with specified minimum yield point 460 N/mm^2 specified in Chapter 3 of Part XI.

(ii) Welding consumables

(1) Consumables for hull structural steels specified in Chapter 4 of this Part.

(2) Consumables for YP47 steels specified in Chapter 4 of this Part.

(c) Welding procedure.

The welder qualification test assembly is to be welded according to a welding procedure specification (WPS or pWPS) simulating the conditions in production, as far as practicable.

(d) Root run and capping run need each to have a minimum of one stop and restart. The welders are allowed to remove minor imperfections only in the stop by grinding before restart welding.

(e) Types of welded joint

The types of welded joint for welder's qualification are to be classified as shown in Table XII 3-2 of this Chapter.

3.3.5 Test assemblies for pipe welding

(a) Test assemblies are to be prepared in accordance with the requirements given in Table XII 3-8 and shown in Fig. XII 3-2 and Fig. XII 3-8 to Fig. XII 3-12 of this Chapter. Pipes for preparation of the test assembly are to be of the materials as specified in Chapter 5, 9 or 11 (aluminum alloy) of Part XI or their equivalents.

The welding of test assemblies for pipes applied with pipe positions for welding upwards (PH) or for welding downwards (PJ) during qualification tests is to be as specified in Fig. XII 3-11 of this Chapter.

Generally, One welding position is to be used per test assembly. For qualification tests for pipes, arcs AB and AC indicated in Fig. XII 3-12 of this Chapter may be welded in welding position PH or PJ respectively, and arc BC may be welded in welding position PC notwithstanding the requirement above.

(b) Welding procedure

The welder qualification test assembly is to be welded according to a welding procedure specification (WPS or pWPS) simulating the conditions in production, as far as practicable.

3.3.6 Test assemblies for tack welding

(a) Test assemblies are to be prepared in accordance with the requirements given in Table XII 3-8 of this Chapter and shown in Fig. XII 3-6 and Fig. XII 3-7 of this Chapter.

(b) Tack welder qualification is to qualify for thickness greater than or equal to 3 mm, and all tubular diameters. A tack welder who passes the fracture test is to be qualified to tack weld all types of joints for the process and in the position in whicn the tack welder is qualified.

3.3.7 Welding consumables

(a) Welding consumables used for preparing the test assembly are to be of the electrodes or wires as specified in Chapter 4 of this Part corresponding to the steel or aluminum alloy grade of the test assembly base material and the welding position suitably.

(b) Welding consumables other than those specified in WPS or pWPS may be accepted by the Society, provided they are equivalent.

(c) Each pass of the weld is to be made by the size of welding consumable which is the same as that used in the actual working practice.

3.3.8 Test requirements

(a) Test assemblies are not to be subjected to preheating, peening and post-weld heat treatment.

(b) Welding joints of the test assembly are to be subjected to a visual examination as specified in 3.3.8(c) of this Chapter prior to the preparation of test specimens. The surface of welding joints is to have uniform width and height of reinforcement, to be free from crack, undercut, significant sharp, icicle, overlap or other injurious defects.

(c) Visual examination

(i) The welds shall be visually examined prior to the cutting of the test specimen for the bend test and fracture test. The result of the examination is to show the absence of cracks or other serious imperfections.

(ii) Imperfections detected are to be assessed in accordance with quality level B in ISO 5817, except for the following imperfection types for which level C applies:

(1) Excess weld metal

(2) Excess penetration

(3) Excessive convexity

(4) Excessive throat thickness

(d) Bend test

(i) Unless otherwise specified, bend tests may be either a guided bend test or a transverse bend test. Bend test specimens as required in Table XII 3-8 of this Chapter are to be taken from each test assembly, each specimen is to be prepared and to be subjected to bend test in complying with the requirements given in 1.3.3 of this Part or IACS UR W2.6.

(ii) Radiographic test or fracture test may be carried out in lieu of bend test for butt welds except the gas-shielded welding processes with solid wire or metal cored wire.
The criteria for evaluating radiographic examinations of the welds are to be complied, unless otherwise specified, with ISO 5817 level B for ferrous materials or ISO 10042 level B for aluminum alloy, or equivalent specifications.

(iii) Transverse bend test specimens are to be in accordance with IACS UR W2.6.

(iv) The mandrel diameter to thickness ratio (i.e. D/T) is to be that required for welding consumable (Chapter 4 of this Part)

(v) 2 face bend test and 2 root bend test specimens are to be tested for initial qualification test, and 1 face and 1 root bend test specimens for renewal test. For thickness 12 mm and over, 4 side specimens (2 side specimens for renewal test) with 10 mm in thickness may be tested as an alternative.

(vi) At least 1 bend test specimen shall include one stop and restart in the bending part, for root run or for cap run.

(vii) The test specimens are to be bent through 180 degrees. After the test, the test specimens shall not reveal any open defects in any direction greater than 3 mm. Defects appearing at the corners of a test specimen during testing should be investigated case by case.

(e) Radiographic test

When radiographic testing is used for butt welds, imperfections detected shall be assessed in accordance with ISO 5817, level B.

(f) Fracture test

(i) Butt welds

When fracture test is used for butt welds, full test specimen in length is to be tested in accordance with ISO 9017. Imperfections detected shall be assessed in accordance with ISO 5817, level B.

(ii) Fillet welds

The fracture test is to be performed by folding the upright plate onto the through plate. Evaluation shall concentrate on cracks, porosity and pores, inclusions, lack of fusion and incomplete penetration. Imperfections that are detected shall be assessed in accordance with ISO 5817, level B.

Two macro sections may be taken in lieu of the fracture test.

(g) Macro examination

(i) When macro examination is used for fillet welds, two test specimens are to be prepared from different cutting positions; at least one macro examination specimen shall be cut at the position of one stop and restart in either root run or cap run. These specimens are to be etched on one side to clearly reveal the weld metal, fusion line, root penetration and the heat affected zone.

(ii) Macro sections shall include at least 10 mm of unaffected base metal.

(iii) The examination is to reveal a regular weld profile, through fusion between adjacent layers of weld and base metal, sufficient root penetration and the absence of defects such as cracks, lack of fusion etc.

3.4 Retest

3.4.1 When a welder fails a qualification or a renewal test, the following shall apply.

(a) In cases where the welder fails to meet the requirements in part of the tests, a retest may be welded immediately, consisting of another test assembly of each type of welded joint and position that the welder failed. In this case, the test is to be done for duplicate test specimens of each failed test.
All retest specimens shall meet all of the specified requirements.

(b) In cases where the welder fails to meet the requirements in all parts of the required tests or in the retest prescribed in (a) above, the welder shall undertake further training and practice.

(c) When there is specific reason to question the welder's ability or the period of effectiveness has lapsed, the welder shall be re-qualified in accordance with the tests specified in 3.3 of this Chapter.

3.4.2 Where any test specimen does not comply with dimensional specifications due to poor machining, a replacement test assembly shall be welded and tested.

3.4.3 If the retest fails, the welder is to be retrained for at least one month before undergoing a new test.

3.5 Certification

3.5.1 Qualification certificates are normally issued when the welder has passed the qualification test by the Society. Each shipyard and manufacturer shall be responsible for the control of the validity of the certificate and the range of the approval.

3.5.2 The following items are to be specified in the certificate:

(a) Range of qualification for base metal, welding processes, filler metal type, types of welded joint, plate thicknesses and welding positions.

(b) Expiry date of the validity of the qualification.

(c) Name, date of birth, identification and the photograph of the welder.

(d) Name of shipbuilder/manufacturer.

3.5.3 A Welder's Qualification Certificate (W.Q. Cert.) valid for three years from the issue date is to be issued to the welder who has passed the required qualification tests by the Society. The validity of the W. Q. Cert. is to be maintained in accordance with 3.6.2 of this Chapter. Where the welder is qualified for welding stainless steels or aluminum alloy, a special notation "For Stainless Steels" or "For Aluminum Alloy" is to be noted in the W.Q. Cert.

3.5.4 When a certificate is issued, the relative documents such as test reports and/or re-validation records are to be archived as annexes to the copy of certificate according to the rules of the Society.

3.5.5 The status of approvals of each individual qualification is to be demonstrated to the Society when requested.

3.6 Period of Validity

3.6.1 Initial approval

(a) Normally the validity of the welder's approval begins from the issue date of qualification certificate when all the required tests are satisfactorily completed. The certificate is to be signed at six-month intervals by the shipyards/manufacturers personnel who is responsible for production weld quality provided that all the following conditions are fulfilled:

(i) The welder shall be engaged with reasonable continuity on welding work within the current range of approval. An interruption for a period no longer than six months is permitted.

(ii) The welder's work shall in general be in accordance with the technical conditions under which the approval test is carried out.

(iii) There shall be no specific reason to question the welder's skill and knowledge.

(b) If any of these conditions are not fulfilled, the Society is to be informed and the certificate is to be cancelled. The validity of the certificate may be maintained in agreement with the Society as specified in 3.6.2 as below. The maintenance scheme of qualification is in accordance with 3.6.2(a) as below.

3.6.2 Maintenance of the approval

(a) Revalidation shall be carried out by the Society. The skill of the welder is to be periodically verified.

(i) For plate welding, the skill of the welder is to be periodically verified by one of the following:

(1) Renewal test will be carried out every 3 years prior to the due day.
The renewal test is to be carried out within 6 months before the expiry date of the existing certificate. If the retest of renewal test is carried out, the welder has to pass the retest not later than 6 months after the expiry date of the existing certificate. The new period of validity will be 3 years from the expiry date of the existing certificate.
The renewal test will be in accordance with Table XII 3-8 of this Chapter.

(2) Every 2 years, 2 welds made during the last 6 months of the 2 years validity period shall be tested by radiographic or ultrasonic testing or destructive testing and shall be recorded. The weld tested shall reproduce the initial test conditions except for the thickness. These tests revalidate the welder's qualifications for an additional 2 years.

(ii) For pipe welding, the renewal test will be carried out every 3 years prior to the due day.

The renewal test is to be carried out within 6 months before the expiry date of the existing certificate. If the retest of renewal test is carried out, the welder has to pass the retest not later than 6 months after the expiry date of the existing certificate. The new period of validity will be 3 years from the expiry date of the existing certificate.

The renewal test will be in accordance with Table XII 3-8 of this Chapter.

(b) The Society has to verify compliance with the above conditions and sign the maintenance of the Welder's Qualification Certificate

Table XII 3-8
Welder Qualification Tests and Renewal Tests

Kind	Range of Qualification Allowable Thickness (mm) / Outside diameter (mm) (2)	Test Assemblies(1) Plate thickness (mm) / Outside diameter (mm) (2)	No. of tests for qualification test	No. of tests for renewal test
Plate Butt welding	$3 \le t \le 2T$ or $T \le t \le 2T$ (3)	$T < 12$ (3)	2 face bending and 2 root bending (4)	1 face bending and 1 root bending (4)
	$t \ge 3$	$T \ge 12$	4 side bending (4)	2 side bending (4)
Plate Fillet welding	$3 \le t \le 2T$ or $T \le t \le 2T$ (3)	$T < 12$ (3)	1 fracture (5)	1 fracture (5)
	$t \ge 3$	$T \ge 12$	1 fracture (5)	1 fracture (5)
Pipe Butt welding	$D \le d \le 2D$	$D \le 25$	2 face bending and 2 root bending (4)	1 face bending and 1 root bending (4)
	$0.5D^{(2)} \le d$	$25 < D$	4 side bending (4)	2 side bending (4)
Pipe Fillet welding	$D \le d \le 2D$	$D \le 25$	1 fracture (5)	1 fracture (5)
	$0.5D^{(2)} \le d$	$25 < D$	1 fracture (5)	1 fracture (5)
Tack welding Butt	$t \ge 3$	$T \approx 10$	1 fracture (5)	1 fracture (5)
Tack welding Fillet	$t \ge 3$	$T \approx 10$	1 fracture (5)	1 fracture (5)

Notes:

(1) Welding position used in each test assembly is in accordance with Table XII 3-5 to Table XII 3-7 of this Chapter. Details of test assemblies are according to Fig. XII 3-3 to Fig. XII 3-12 of this Chapter.

(2) Symbol "T" means the thickness of the test assembly. Symbol "t" means the qualified plate thickness range. Symbol "D" means the outside diameter of test assemblies for pipe. Symbol "d" means qualified range of outside diameter of pipe.

(3) If the thickness of test assembly (T) is smaller than 3 mm, the qualified plate thickness range (t) assembly is from T to 2T.

(4) Radiographic test or fracture test may be carried out in lieu of bend test except the gas-shielded welding processes with solid wire or metal cored wire.

(5) 2 macro sections may be taken in lieu of the fracture test.

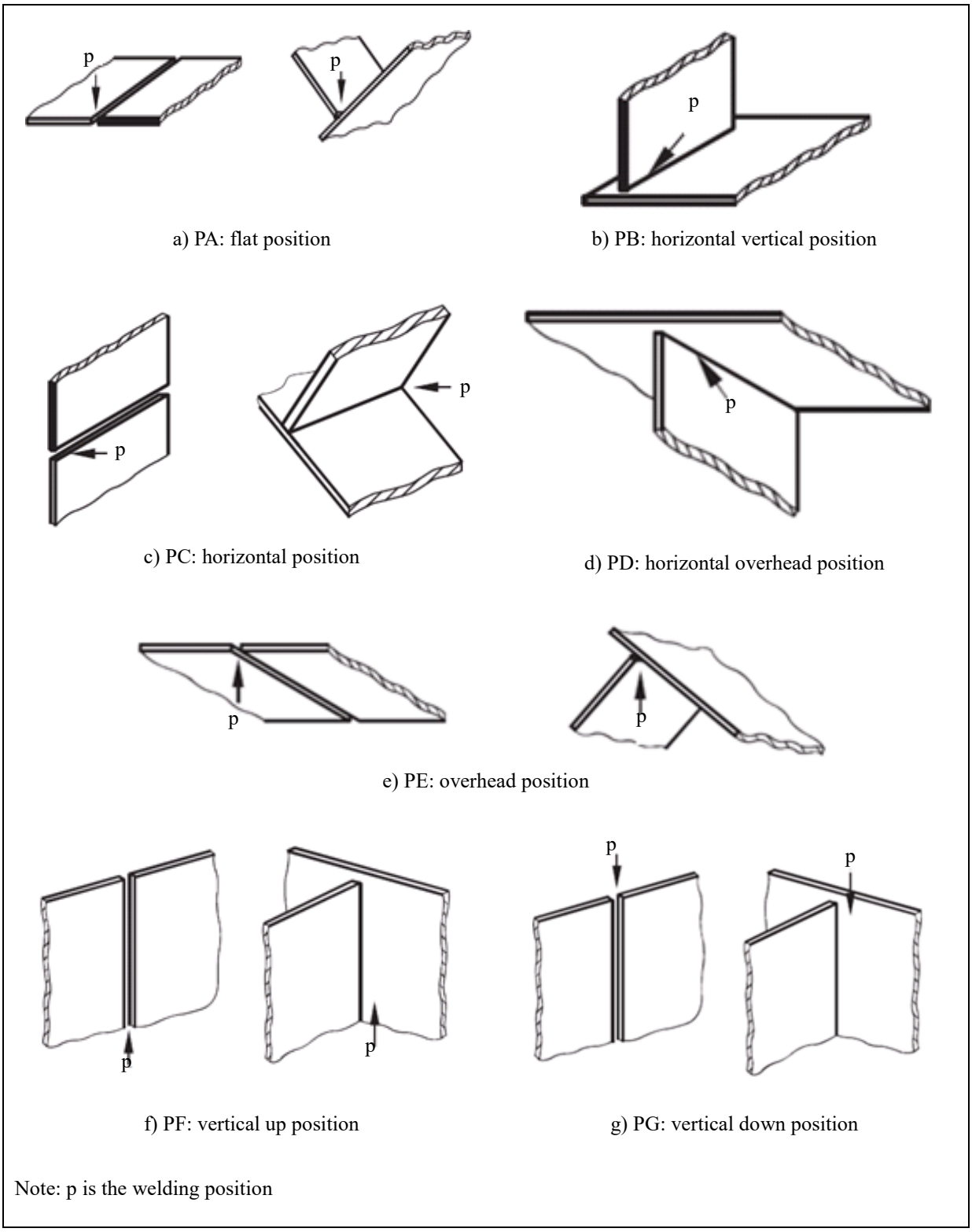

Note: p is the welding position

Fig. XII 3-1
Welding Positions of Test Assembly for Plate Welding

Welding Positions	Symbol	Butt Welding	Fillet Welding
Flat	PA	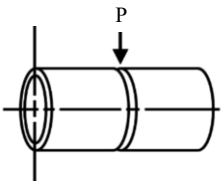 (Pipe rotating)	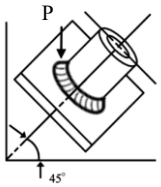 (Pipe rotating)
Horizontal vertical	PB	-	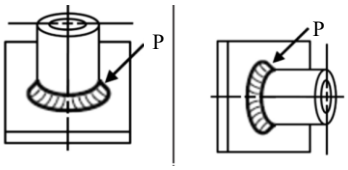 (Pipe rotating or fixed) (Pipe rotating)
Horizontal	PC	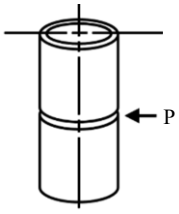 (Pipe rotating or fixed)	-
Horizontal overhead	PD	-	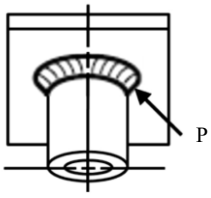 (Pipe rotating or fixed)
Pipe position for welding upwards	PH	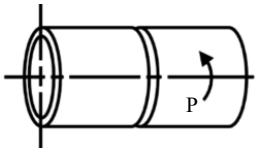 (Pipe fixed)	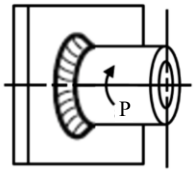 (Pipe fixed)
Pipe position for welding downwards	PJ	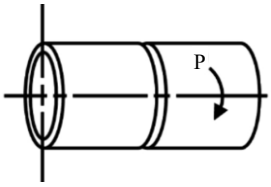 (Pipe fixed)	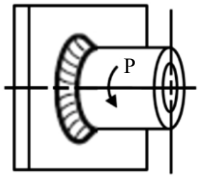 (Pipe fixed)

Note: The symbol "P" in this figure indicates the following:
- PA, PB, PC, PD: welding position.
- PH, PJ: welding progression or direction.

Fig. XII 3-2
Welding Positions of Test Assembly for Pipe Welding

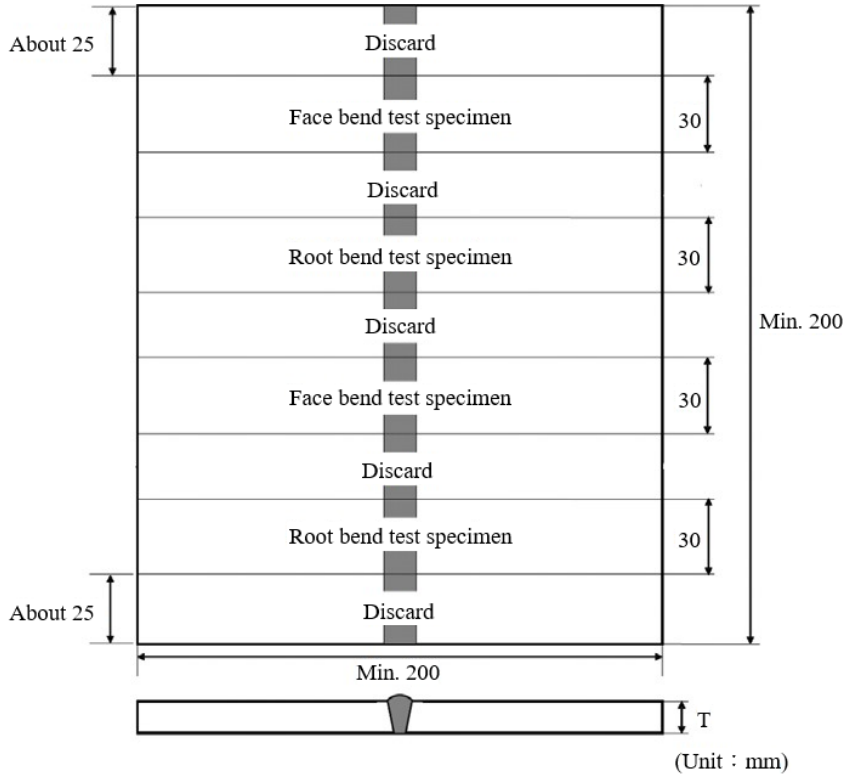

Fig. XII 3-3
Dimensions and Types of Test Assembly for Butt Welds (T < 12mm)

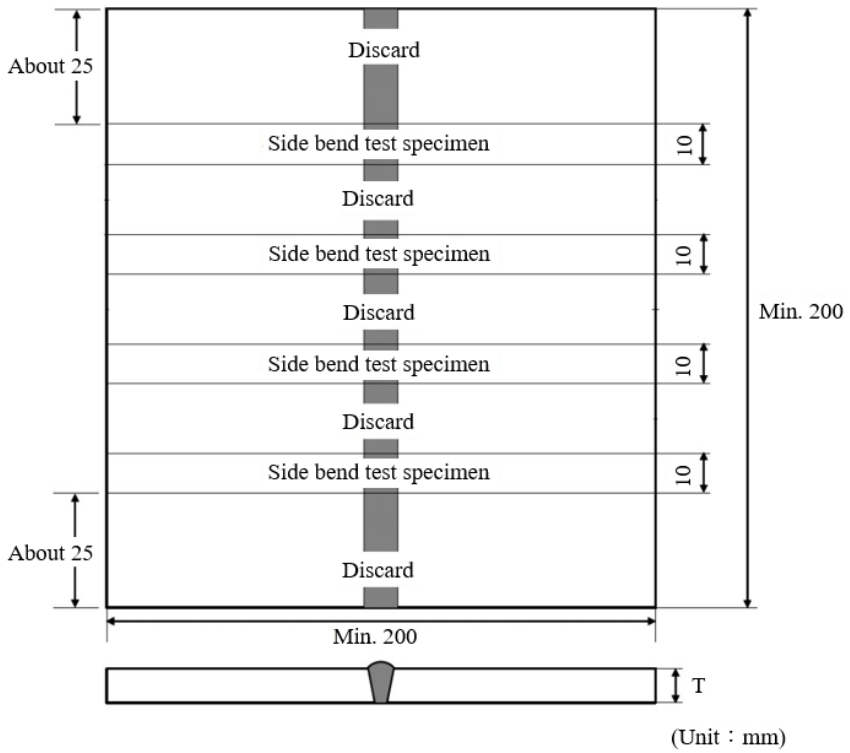

Fig. XII 3-4
Dimensions and Types of Test Assembly for Butt Welds (T ≥ 12mm)

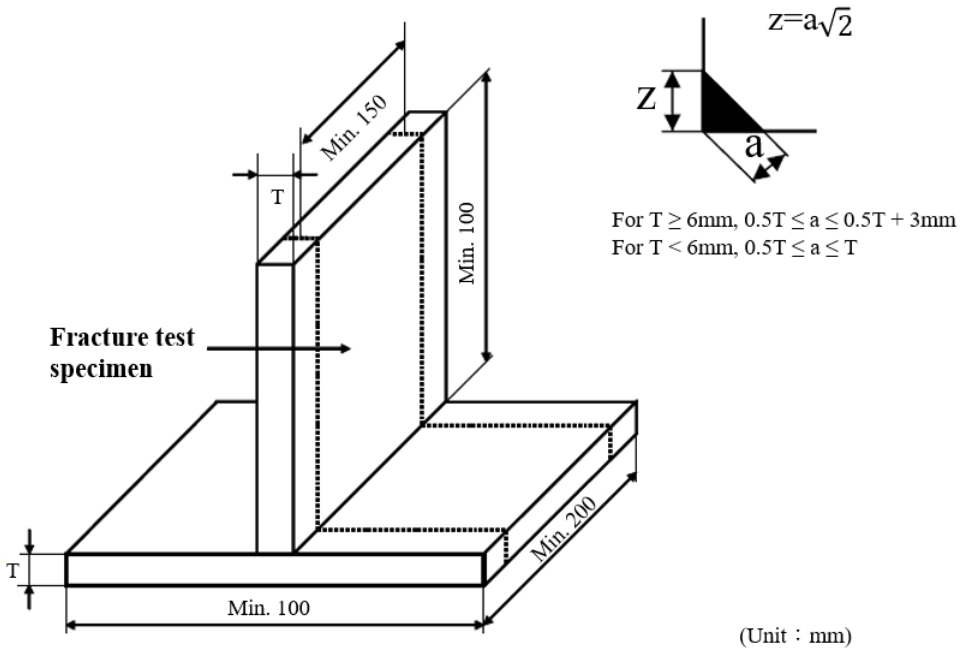

Fig. XII 3-5
Dimensions and Types of Test Assembly for Fillet Welds

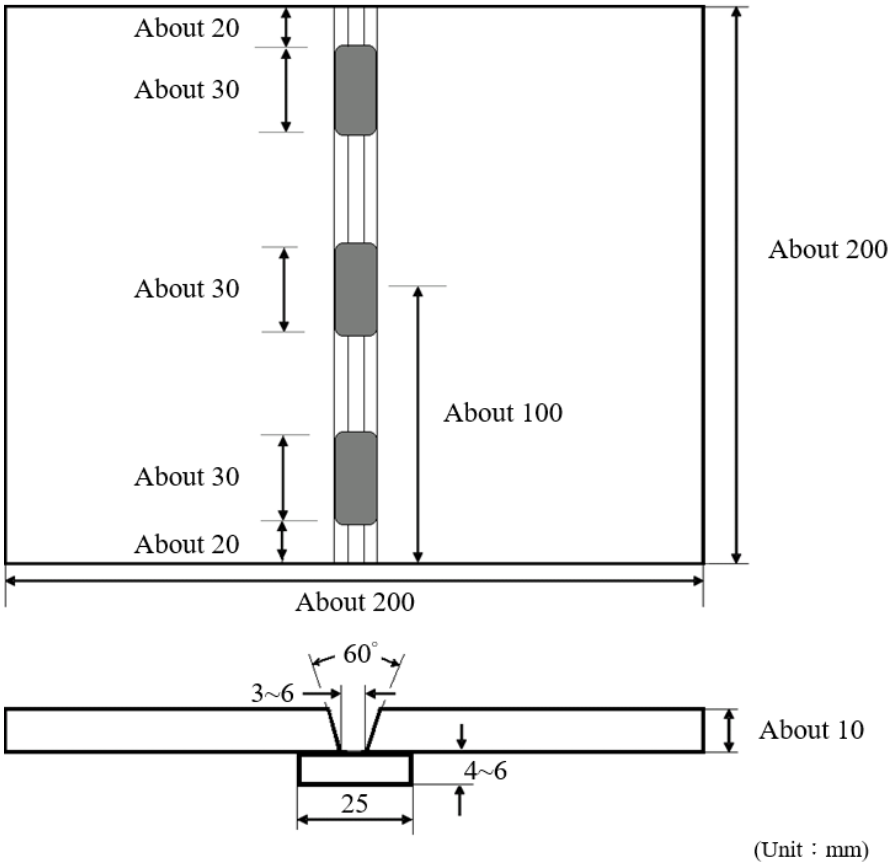

Fig. XII 3-6
Dimensions and Types of Test Assembly for Tack Butt Welds

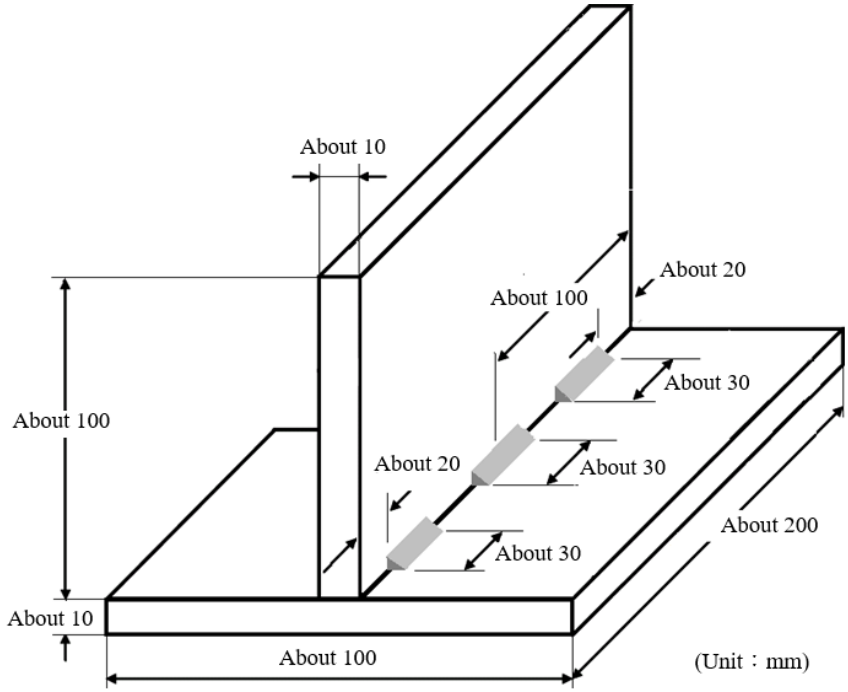

Fig. XII 3-7
Dimensions and Types of Test Assembly for Tack Fillet Welds

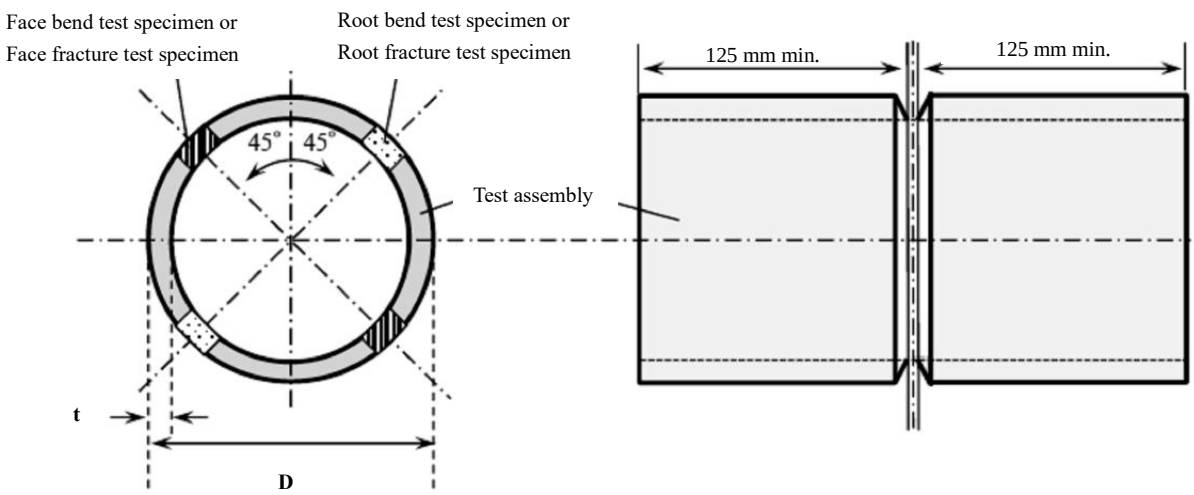

Fig. XII 3-8
Dimensions of Test Assembly for Pipe Butt Welding

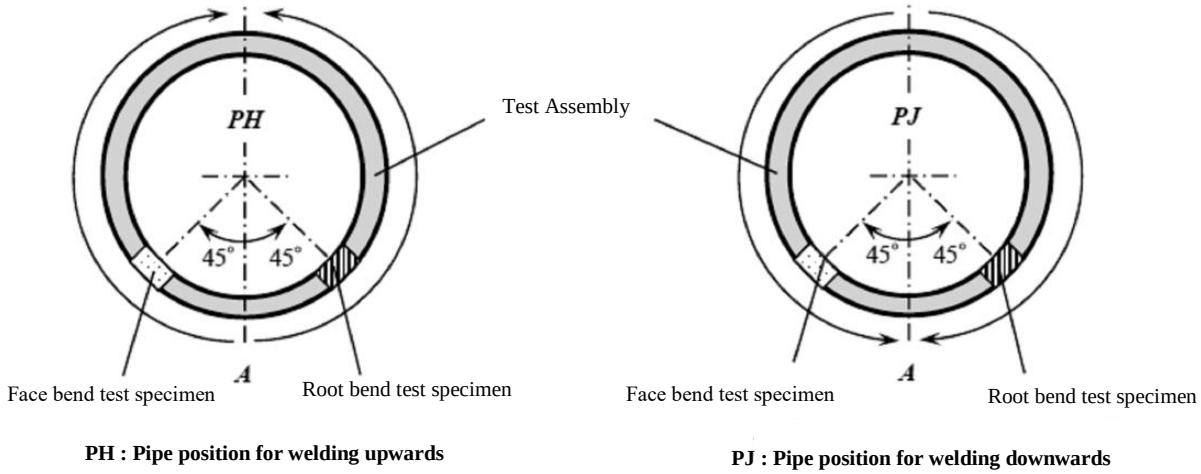

Notes:
(1) A is to just under horizontal axis.
(2) Arrows in the figure indicates the welding direction.

Fig. XII 3-9
Selection of Test specimen for Test Assemblies Applied with PH and PJ positions in Qualification and Renewal Tests

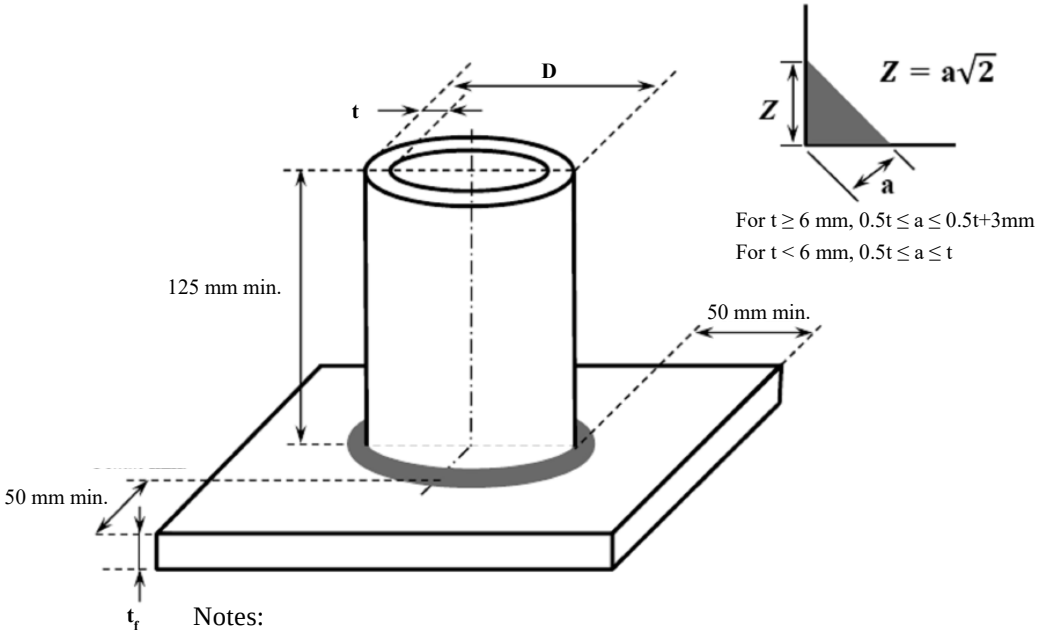

Notes:
(1) t_f may be different value of t.
(2) The shape of flange may be optional. However, distance from outside of pipe assembly to edge of flange is not less than 50 mm on the flange plate surface.

Fig. XII 3-10
Dimensions of Test Assemblies for Pipe Fillet Welding

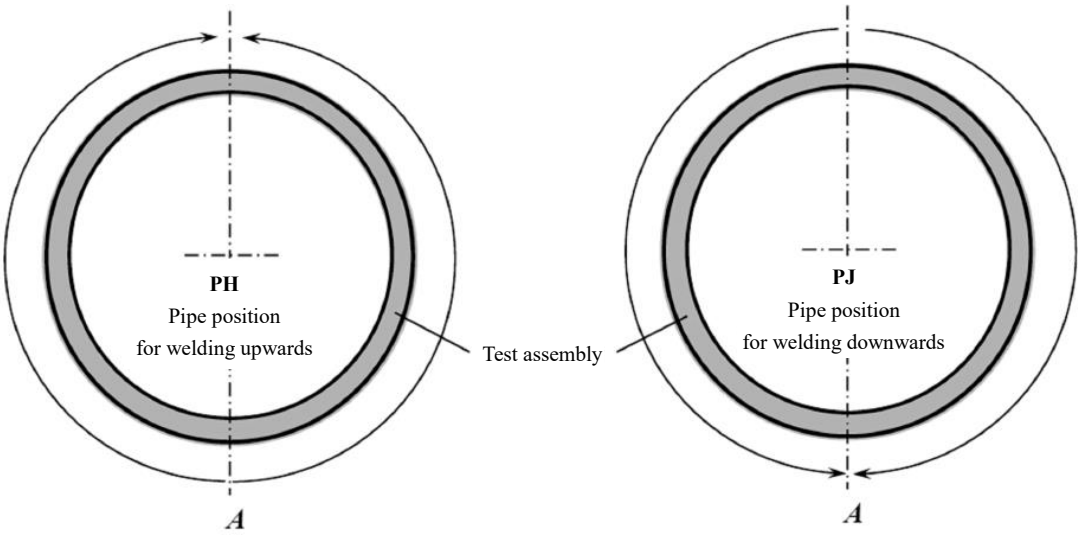

Notes:
(1) Point A is to just under the horizontal axis.
(2) Arrows in the figure indicates the welding direction.

Fig. XII 3-11
Welding for Test Assemblies of Pipes Applied with PH and PJ Positions

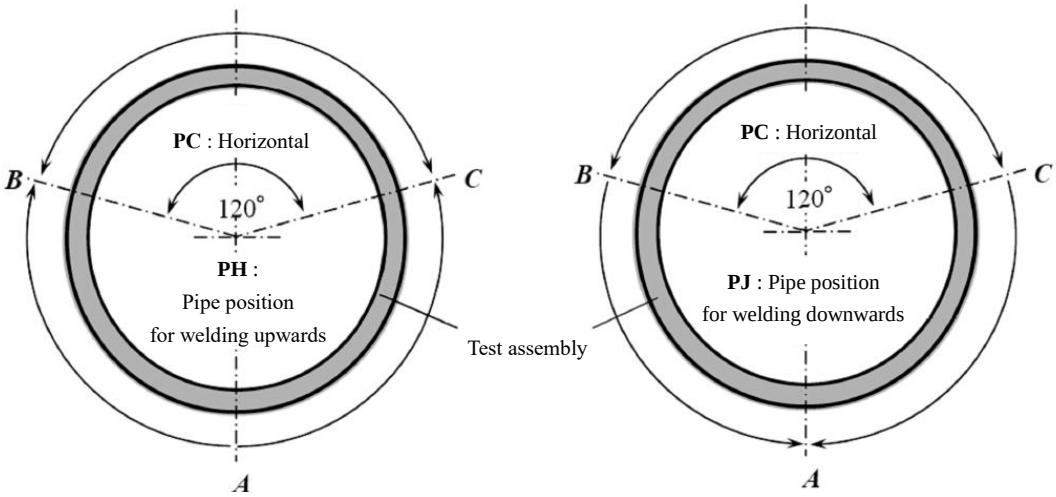

Notes:
(1) In welding on the arc BAC, A is to just under the horizontal axis.
(2) Arrows in the figure indicates the welding direction. In arc BC, whichever direction is acceptable.

Fig. XII 3-12
Welding for Test Assemblies of Pipes Applied with Multiple Welding Positions

Chapter 4
Welding Materials

4.1 General

4.1.1 General applications

(a) The electrodes, wires, fluxes and other welding materials (hereinafter referred to as "welding materials") for welding of hull structures, equipments, machinery parts, boilers, pressure vessels, piping, etc. in ships classed or intended to be classed with the Society, are to be specially approved by the Society.

(b) This chapter gives the general requirements for the approval of welding materials which are intended for use in the welding of rolled materials of normal strength, higher strength and extra high strength steels, low temperature service steels, stainless steels and aluminium alloys as specified in Chapter 3, 4, 9 and 11 of Part XI.

(c) The welding materials, which have been approved in accordance with the requirements given in this Chapter, may also applicable to the welding for other materials than those mentioned in 4.1.1(b) above subject to the special consideration of the Society.

4.1.2 Manufacturing and approval

(a) The plant manufacturing welding materials submitted for approval is to be inspected by the Surveyor to satisfy himself that the facilities, methods of production and quality control procedures in that plant are to be such as to ensure reasonable uniformity in manufacture. Where a plant manufacturing welding materials were approved by the Society to submit a new welding material for approval, plant inspection may be required for the facilities, methods of production and quality control procedures for the new product.

(b) Welding materials intended to be approved by the Society are to be subjected to a satisfactory approval test. Data in connection with characteristics of the welding materials are to be submitted.

(c) Welding materials are to have approval at each manufacturer's plant for each brand. Where approval welding materials are intended to be produced at plants other than those of the manufacturers or at plants of their licenses of the said welding materials, approval tests may be dispensed with partially by the Society.

(d) Approval tests and annual tests for welding materials which are not covered by the requirements specified in this Chapter are to be carried out in accordance with the test specification approved by the Society.

(e) The Society may require, in any particular case, such additional tests or requirements as may be necessary. The Society is also to be notified of any alteration proposed to be made in the process of manufacture subsequent to approval.

(f) In the following cases, the approval of welding materials by the Society is to be revoked, after notice is given to the manufacturer:
   (i) Where the Society has recognized that the quality of welding materials is remarkably worse than that when the approval test was carried out.
   (ii) Where welding materials have failed to meet the requirements in annual inspections and tests.
   (iii) Where welding materials are not inspected and tested annually as required by the Rules.

4.1.3 Grading

(a) Welding materials for rolled steels are grading as follows based upon the kind of steels to be welded and upon the strength and toughness of the welding materials:

(i) Grades 1, 2 and 3, for welding normal strength steels.

(ii) Grades 1Y, 2Y, 3Y and 4Y, for welding higher strength steels with specified minimum yield stress up to 355 N/mm^2.

(iii) Grades 2Y40, 3Y40 and 4Y40, for welding higher strength steels with specified minimum yield stress up to 390 N/ mm^2.

(iv) Grades 2Y47, 3Y47 and 4Y47, for welding higher strength steels with specified minimum yield stress 390 N/mm^2 and 460 N/mm^2.

(v) Grades 3Yxx, 4Yxx and 5Yxx, where xx is to be 42, 46, 50, 55, 62 or 69, for welding extra high strength steels with specified minimum yield stress 420, 460, 500, 550, 620 and 690 N/mm^2 respectively.

(vi) Grades L1, L1Y, L2, L2Y and L3Y, for welding low temperature service steels.

(b) The welding materials for austenitic stainless steels and aluminium alloys are graded corresponding to the grades of which the materials are to be welded.

(c) The following suffixes are to be affixed to the grade marks given in 4.1.3(a) above where:

H15, H10 or H5	:	Welding materials approved as low hydrogen type, for which, the hydrogen test results have been complied with the requirements given in 4.2.6 of this Chapter and based on the content of diffusible hydrogen for affixing a H15, H10 or H5.
S	:	Welding materials approved for semi-automatic multi-run technique welding.
T	:	Automatic welding materials approved for two-run technique welding.
M	:	Automatic welding materials approved for multi-run technique welding.
TM	:	Automatic welding materials approved for both two-run and multi-run technique welding.
SM	:	Welding materials approved for both semi-automatic and automatic multi-run technique welding.
SR	:	One-side automatic welding material approved for one-run technique welding.
MR	:	One-side automatic welding material approved for multi-run technique welding.
SMR	:	One-side automatic welding material approved for both one-run and multi-run technique welding.
E	:	Welding materials approved for electro-slag and electro-gas welding.

(d) Welding materials for normal strength steels and higher strength steels, but excluding nY47, which have satisfied the requirements for a higher grade are considered to have complied with the requirements for a lower grade in each strength level, i.e. grade 2 covers grade 1, grade 3 covers grades 1 and 2, grade 2Y covers grade 1Y, grade 3Y covers grades 1Y and 2Y, grade 4Y covers grades 1Y, 2Y and 3Y. nY47, where n is to be 2, 3 or 4, is generally considered suitable for welding steels in the one strength level below that for which they have been approved, see Table XII 5-2 of this Part.

(e) Welding materials for extra high strength steels, each higher grade includes the one (or those) below grades Axxx and Dxxx steels are to be welded using welding materials of at least grade 3Yxx, grade Exxx steels using at least grade 4Yxx and grade Fxxx steels using at least grade 5Yxx. Welding materials approved with grades nY42, nY46 and nY50, where n is to be 3, 4 or 5, are generally considered suitable for welding steels in the two strength levels below that for which they have been approved. Welding materials approved with grades nY55, nY62 and nY69 are generally considered suitable for welding steels in the one strength level below that for which they have been approved, see Table XII 5-2 of this Part.

(f) Upgrading of approved welding materials may be accepted at the request of manufacturers, preferably at the time of annual test. Generally, the necessary tests for this purpose are to be required in addition to the normal annual test items.

(g) Welding materials which have been approved as grade 1Y, 2Y or 3Y are generally considered also to have been approved as grade 1, 2 or 3 respectively, unless otherwise specified.

4.1.4 Annual inspections and tests

All establishments where approved welding materials are manufactured, and the associated quality control procedures, are to be subjected to annual inspections at an interval of approximately 12 months. On these occasions, samples of approved welding materials are to be selected by the Surveyor and subjected to the tests detailed in this Chapter.

4.1.5 Preparation of test assemblies

(a) For welding materials subjected for approval and annual tests, test assemblies are to be prepared as specified in this Chapter.

(b) The plate materials used for preparation of test assemblies are to be as given in Table XII 4-1. However, for deposited metal test assemblies and hydrogen test specimens, any grade in each kind of materials may be used.

(c) The welding current, voltage, travel speed, etc. used for preparation of test assemblies are to be held within the range recommended by the manufacturer and, where a welding material is stated to be suitable for both alternating current (A.C.) and direct current (D.C.), test assemblies are to be welded with A.C.

(d) In the making of deposited metal and butt weld test assemblies, after each run, the test assembly is to be left in still air until it has cooled to less than 250°C (100°C in the case of two run technique), the temperature being taken in the center of the weld, on the surface of the seam.

(e) Test assemblies after being welded are not to be subjected to any heat treatment. However, test specimens for deposited tensile and longitudinal tensile tests may be subjected to a temperature not exceeding 250°C for a period not exceeding 16 hours for hydrogen removal, prior to testing.

4.1.6 Test procedures

(a) Mechanical tests

(i) Tensile, bending and impact test specimens taken from the deposited metal and butt weld test assemblies are to be prepared in accordance with the requirements given in 1.3 of this Part and are to be subjected to mechanical tests to fulfill the requirements given in Tables XII 4-2, XII 4-3, XII 4-4 and XII 4-5.

(ii) Fracture tests for fillet weld tests are to be carried out in compliance with the requirements given in 1.3.5 of this Part.

(iii) Where any test fails, retests and additional tests may be carried out in accordance with the requirements given in 1.3.7 of this Part.

(b) Other examinations

(i) All welded test assemblies are to be subjected to a surface inspection in compliance with the requirements given in 1.4.1 of this Part, prior to testing.

(ii) It is recommended that welded assemblies be subjected to non-destructive examinations in compliance with the requirements given in 1.4.3 of this Part to ascertain any defects in the weld prior

to testing. The soundness of the weld is to be complied, unless otherwise specified, with ISO 5817 level B for ferrous materials or ISO 10042 level B for aluminum alloy, or equivalent specifications.

(iii) Macro-etching examination for cross sections of welding joints, if required, is to be satisfactorily carried out in accordance with the requirements given in 1.4.2 of this Part.

4.1.7 Chemical analysis

The chemical analysis of the deposited weld metal in each test assembly is to be reported by the manufacturer and is to include the content of all significant alloying elements.

4.1.8 Packing

Approved welding materials are to be packed thoroughly to keep the quality during their transportation and storage.

4.2 Approval Tests for Manual Arc Welding Electrodes

4.2.1 Applications

The approval test requirements given herein-after are applicable to the arc welding electrodes which are operated by manual and by gravity or similar contact methods, intended for welding normal strength, higher strength, extra high strength or low temperature service rolled steels.

4.2.2 Approval tests

Electrodes intended to be approved by the Society are generally to be subjected to a satisfactory approval test which consist of the following test items:

(a) Deposited metal test,

(b) Butt weld test (for the electrodes intended solely for fillet welding purpose, this test is not required),

(c) Fillet weld test (for the electrodes intended solely for butt welding purpose, this test is not required), and

(d) Hydrogen test (the test is only required for the electrodes of low hydrogen type)

4.2.3 Deposited metal tests

Test assemblies and test specimens are to be prepared and tested in accordance with Tables XII 4-1, XII 4-2, XII 4-4 and XII 4-6.

4.2.4 Butt weld tests

Test assemblies and test specimens are to be prepared and tested in accordance with Tables XII 4-1, XII 4-3, XII 4-4 and XII 4-6 for the welding positions which are intended to be approved.

4.2.5 Fillet weld tests

(a) Preparation of test assemblies

Fillet weld test assemblies in form of T joint are to be prepared in accordance with Table XII 4-7 for the welding positions which are intended to be approved.

(i) The length of the test assembly is to be sufficient to allow at least the deposition of the entire length of the largest diameter electrode being tested.

(ii) The fillet size is generally to be determined by the electrode size and the welding current employed during test. The manufacturer's recommended current range is to be reported for each electrode size.

(iii) Where the approval for a fillet welding electrode is carried out by the method of automatic gravity or similar contact welding, the fillet welding is to be carried out with the longest size of the electrode manufactured, using the welding process recommended by the manufacturer.

(b) Test requirements

Test specimens as shown in Fig. XII 4-3 are to be taken from each test assembly and subjected to the following tests:

(i) Macro-etching examinations.

The cutting sections of three test specimens are to be satisfactorily examined in compliance with the requirements given in 1.4.2 of this Part.

(ii) Hardness tests.

Hardness tests as shown in Fig. XII 4-4 are to be made on each of three macro-etching sections. Hardness readings in way of weld metals, heat affected zones and base materials are to be reported.

(iii) Fracture tests

Two fracture test specimens are to be subjected to a satisfactory test in compliance with the requirements given in 1.3.5 of this Part. One of these specimens is to be cut out the first side fillet weld and the other specimen is to be cut out the second side fillet weld.

4.2.6 Hydrogen tests

(a) The hydrogen tests are to be carried out through the mercury method, thermal conductivity detector method or gas chromatography method according to Standard ISO 3690.

Four weld assemblies are to be prepared. The temperature of the specimens and minimum holding time are to be complied with following, according to the measuring method respectively:

Measuring Method		Test Temperature (°C)	Minimum Holding Time (h)
Thermal Conductivity Detector Method(1)	Gas Chromatography	45	72
		150	6

Note:

(1) The use of hot carrier gas extraction method may be considered subject to verification of the testing procedure to confirm that collection and measurement of the hydrogen occurs continuously until all of the diffusible hydrogen is quantified.

The use of the glycerin method as described in 4.2.6 (b) & (c) below or other methods may be admitted at the Society discretion.

(b) Preparation of test specimens

(i) Four test specimens are to be prepared, measuring 12 mm by 25 mm in cross section by about 125 mm in length. Before welding, specimens are to be weighed to the nearest 0.1g.

(ii) On the 25 mm surface of each test specimen, a single bead of welding is to be deposited about 100 mm length, by a 4 mm electrode, fusing about 150 mm of the electrode. The welding is to be carried out with an arc as short as possible and with a current of about 150 amp. Electrodes, prior to welding, can be submitted to the normal drying process recommended by the manufacturer.

(iii) Within 30 seconds of the completion of the welding of each specimen, the slag is to be removed and the specimen quenched in water at approximately 20°C. After 30 seconds in the water, specimens are to be cleaned, dried and placed in an apparatus suitable for the collection of hydrogen by displacement of glycerin. The glycerin is to be kept at a temperature of 45°C during the test. All four specimens are to be welded and placed in the hydrogen collecting apparatus within 30 minutes.

(c) Test procedures

(i) Specimens are to be kept immersed in the glycerin for a period of 48 hours and, after removal, are to be cleaned in water and spirit dried and weighed to the nearest 0.1 g to determine the amount of weld deposited.

(ii) The amount of gas evolved is to be measured to the nearest 0.05 cm^3 and corrected for temperature and pressure to 0°C and 760 mmHg.

(d) Test requirements

The individual and average diffusible hydrogen contents of the four specimens are to be reported, and the average value in cm^3 per 100 grams is not to exceed the following:

Grade Suffixes	Diffusible Hydrogen Contents	Measuring Method
H15	15(1)	Mercury method Thermal conductivity detector method Glycerine method
H10	10(2)	
H5(3)	5	Mercury method Thermal conductivity detector method

Notes:
(1) 10 cm^3 per 100 grams where the glycerine method is used.
(2) 5 cm^3 per 100 grams where the glycerine method is used.
(3) The glycerine method is not to be used for the welding consumables with H5 mark.

(e) For the welding materials of higher strength steels and extra high strength steels, the diffusible hydrogen content is generally not to exceed the grade of hydrogen content:

Grade	Grade of Hydrogen Content
1Y, 2Y, 3Y, 4Y	H10
2Y40, 3Y40, 4Y40, 2Y47, 3Y47, 4Y47	H10
nY42, nY46, nY50	H10
nY55, nY62, nY69	H5

Note: Where n = 3, 4 or 5

4.3 Approval Tests for Semi-Automatic Welding Materials

4.3.1 Applications

The approval test requirements given herein-after are applicable to wire-gas combinations, flux-cored or flux-coated wires with or without shielding gas for semi-automatic multi-run welding which are intended for welding normal strength, higher strength, extra high strength or low temperature service rolled steels.

4.3.2 Approval Tests

(a) Welding materials intended to be approved by the Society are generally to be subjected to a satisfactory approval test which consist of the following test items:

(i) Deposited metal test,

(ii) Butt weld test, and

(iii) Fillet weld test.

(b) The test assemblies and test specimens for the above tests are to be prepared and tested in accordance with the requirements given in Tables XII 4-1, XII 4-2, XII 4-3, XII 4-4 and XII 4-8 and in 4.2.5(b) of this Chapter.

(c) For the test of welding materials intended to be approved with low hydrogen characteristic, special considerations to the requirements as specified in 4.2.6 of this Chapter may be given.

4.4 Approval Tests for Automatic Welding Materials

4.4.1 Applications

(a) The approval test requirements given hereinafter are applicable to the following single electrode automatic welding materials by two-run and/or multi-run techniques which are intended for welding normal strength, higher strength or low temperature service rolled steels and by multi-run technique which is intended for welding extra high strength rolled steels:
   (i) wire-flux combinations for submerged arc welding,
   (ii) wire-gas combinations, and
   (iii) flux-cored or flux-coated wires with or without shielding gas.

(b) For the approval of multiple electrode automatic welding materials, special considerations to the requirements as specified in this section may be given.

4.4.2 Approval tests

(a) Welding materials intended to be approved by the Society are generally to be subjected to a satisfactory approval test which consist of the following test items:
   (i) Multi-run technique welding materials:
      (1) Deposited metal test, and
      (2) Butt weld test.
   (ii) Two-run technique welding materials:
      (1) Butt weld tests.
   (iii) Welding materials for both multi-run and two-run techniques:
      (1) Deposited metal test by multi-run,
      (2) Butt weld test by multi-run, and
      (3) Butt weld tests by two-run.

(b) The test assemblies and test specimens for the above tests are to be prepared and tested in accordance with the requirements given in Tables XII 4-1, XII 4-2, XII 4-3, XII 4-4, XII 4-9 and/or XII 4-10.

(c) For the test of welding materials intended to be approved with low hydrogen characteristics, special considerations to the requirements as specified in 4.2.6 of this Chapter may be given.

4.5 Approval Tests for One-side Welding Materials

4.5.1 Applications

The approval test requirements given herein-after are applicable to single-electrode or multiple-electrodes of wire-flux or wire-gas combinations and flux-cored or flux-coated wires with or without shielding gas for one-run or multi-run one-side automatic and semi-automatic welding sealed with temporary backing materials, which are intended for welding normal strength, higher strength or low temperature service rolled steels.

4.5.2 Approval tests

One-side welding materials intended to be approved by the Society are to be subjected to a satisfactory approval test, for which, the test assemblies and test specimens have been prepared and tested in compliance with the requirements given in Tables XII 4-1, XII 4-2, XII 4-3, XII 4-4 and XII 4-11.

4.6 Approval Tests for Electro-slag and Electro-gas Welding Materials

4.6.1 Applications

The approval test requirements given herein-after are applicable to the electro-slag and electro-gas welding materials which are intended for welding normal strength and higher strength, but excluding H47, rolled steels.

4.6.2 Approval tests

The electro-slag and electro-gas welding materials intended to be approved by the Society are to be subjected to a satisfactory approval test, for which, the test assemblies and test specimens have been prepared and tested in compliance with the requirements given in Tables XII 4-1, XII 4-2, XII 4-3 and XII 4-12.

4.7 Approval Tests for Stainless Steel Welding Materials

4.7.1 The approval test requirements for manual, semi-automatic and automatic welding materials intended for welding the stainless steels are generally to be in accordance with the requirements given in 4.2, 4.3 and 4.4 of this Chapter and Table XII 4-5, unless otherwise specified in following 4.7.2 and 4.7.3.

4.7.2 At the request of manufacturer, the size of welding material, plate thickness, edge preparation, etc. to be used for the preparation of test assemblies as required in 4.2, 4.3 and 4.4 of this Chapter may be modified subject to the approval of the Society.

4.7.3 The impact tests and macro-etching examinations are generally not required unless otherwise deemed necessary.

4.8 Approval Tests for Aluminium Alloy Welding Materials

4.8.1 Grading and Designation

(a) The welding materials preferably to be used for the aluminium alloys concerned are divided into two categories as follows:

W = wire electrode and wire – gas combinations for
metal–arc inert gas welding (MIG), tungsten inert gas arc welding (TIG) or plasma arc welding

R = rod – gas combinations for
tungsten inert gas arc welding or plasma arc welding

(b) The welding materials concerned are graded as mentioned in Table XII 4-14, in accordance with the alloy type and strength level of the base materials used for the approval tests.

(c) Approval of a wire or a rod is to be granted in conjunction with a specific shielding gas according to Table XII 4-15 or defined in terms of composition and purity of "special" gas to be designated with group sign "S". The composition of the shielding gas is to be reported. The approval of a wire or a rod with any particular gas can be applied or transferred to any combination of the same wire or rod and any gas in the same numbered group as defined in Table XII 4-15 subject to the agreement of the Society.

4.8.2 Test and Required Properties

(a) Deposited metal tests

(i) For the testing of the chemical composition of the deposited weld metal, a test piece according to Fig. XII 4-10 is to be prepared. The size depends on the type of the welding material (and on the welding process) and is to give a sufficient amount of pure weld metal for chemical analysis. The base metal used is to be compatible with the weld metal in respect of chemical composition.

(ii) The chemical composition of the deposited weld metal is to be determined and certified in a manner analogous to that prescribed in 4.1.7 of this Chapter. The results of the analysis are not to exceed the limit values specified by the manufacturer.

(b) Butt weld tests

(i) The testing of the welded joints is to be performed on butt-weld test assemblies according to Fig. XII 4-11 and Fig. XII 4-12, made from materials as given in Table XII 4-14, in an analogous manner to 4.2.4, 4.3.2, 4.4.2 of this Chapter respectively.

(ii) Butt weld test assemblies according to Fig. XII 4-11 with a thickness of 10 to 12 mm are to be prepared for each welding position (downhand, horizontal, vertical-upward and overhead) for which the welding material is recommended by the manufacturer; except that welding material satisfying the requirements for downhand and vertical-upward positions will be considered as also complying with the requirements for the horizontal position subject to the agreement of the Society.

(iii) Additionally one test assembly according to Fig. XII 4-12 with a thickness of 20 to 25 mm is to be welded in the downhand position only.

(iv) On completion of welding, assemblies are to be allowed to cool naturally to ambient temperature. Welded test assemblies and test specimens are not to be subjected to any heat treatment. Grade D assemblies are to be allowed to naturally ageing for a minimum period of 72 hours from the completion of welding before testing is carried out.

(v) The mechanical properties are to meet the requirements stated in Table XII 4-16. The position of the fractures is to be stated in the report. The macrographic specimen is to be examined for imperfections such as lack of fusion, cavities, inclusions, pores or cracks.

4.9 Annual Tests for Approved Welding Materials

4.9.1 Test assemblies and test specimens of annual tests for each kind of approved steel welding materials are to be prepared and tested in accordance with Table XII 4-13.

4.9.2 Welding conditions and the edge preparation adopted for preparation of annual test assemblies are to be in accordance with those for approval of test assemblies as required in this Chapter. The length of test assemblies may be reduced to a length sufficient for preparation of the necessary test specimens of annual tests.

4.9.3 For annual tests of approved stainless steel welding materials, the modified requirements given in 4.7.2 and 4.7.3 of this Chapter are also applicable.

4.9.4 The annual tests for approved aluminum alloy welding materials are to entail the preparation and testing of the deposited metal test assembly as prescribed under 4.8.2(a)(i) (Fig. XII 4-10) and of the downhand butt weld test assembly according to 4.8.2(b)(ii) (Fig. XII 4-11) of this Chapter.

Table XII 4-1
Grade of Plate Materials Used for Preparation of Test Assemblies

Grade of Welding materials	Grade of Plate Materials Used for Preparation of Test Assemblies (1)
1	A
2	A, B or D
3	A, B, D or E
1Y	AH32 or AH36
2Y	AH32, AH36, DH32 or DH36
3Y	AH32, AH36, DH32, DH36, EH32 or EH36
4Y	AH32, AH36, DH32, DH36, EH32, EH36, FH32, FH36
2Y40	AH40, DH40
2Y47 (2)	AH47, DH47
3Y40	AH40, DH40, EH40
3Y47 (2)	AH47, DH47, EH47
4Y40	AH40, DH40, EH40, FH40
4Y47 (2)	AH47, DH47, EH47, FH47
3Yxx (3)	Axx0, Dxx0 (3)
4Yxx (3)	Axx0, Dxx0, Exx0 (3)
5Yxx (3)	Axx0, Dxx0, Exx0, Fxx0 (3)
L1	3-235
L1Y	3-325 or 3-365
L2	4-295 or 4-315
L2Y	4-420
L3Y	4-520
For stainless steels	Corresponding grade of rolled stainless steels
For aluminum alloys	Corresponding grade of aluminum alloys

Notes:

(1) Where Grade H32, 3-325, 4-295 or 4-315 is used for preparation of butt weld test assemblies, the tensile strength of the steel is not to be less than the min. tensile strength required in Table XII 4-3 and Table XII 4-4 for each grade of welding materials respectively.

(2) For nY47 grades, where n is to be 2, 3 or 4, as an alternative to Fig. XII 4-1, Fig. XII 4-2, Fig. XII 4-3, Fig. XII 4-5, Fig. 4-6, Table XII 4-6, Table XII 4-7, Table XII 4-8, Table XII 4-9 and Table XII 4-13, the thickness of the plate used for the test assembly may be taken as 50 mm.

(3) Where xx/xx0 denotes 42/420, 46/460, 50/500, 55/550, 62/620 and 69/690.

Table XII 4-2
Deposited Metal Test Requirements of Welding Materials for Hull Construction Steels

Grade of Welding Materials	Tensile Test (1)			Impact Test (2), (3)		
	Tensile Strength (N/mm^2)	Yield Stress min. (N/mm^2)	Elongation on L=5D min. (%)	Test Temperature (°C)	Absorbed energy min. (J)	
					I	II
1	400 - 560 (4)	305	22	20	47	34
2				0		
3				–20		
1Y (5)	490 - 660	375	22	20	47	34
2Y				0		
3Y				–20		
4Y				–40		
2Y40	510 - 690	400	22	0	47	39
3Y40				–20		
4Y40				–40		
2Y47	570 - 720	460	19	0	53	
3Y47				–20		
4Y47				–40		
nY42	530 - 680	420	20	–20 for n = 3 –40 for n = 4 –60 for n = 5	47	
nY46	570 - 720	460	20		47	
nY50	610 - 770	500	18		50	
nY55	670 - 830	550	18		55	
nY62	720 - 890	620	18		62	
nY69	770 - 940	690	17		69	

Notes:

(1) The tensile test requirements in this table are also applicable to the longitudinal tensile test in butt weld test.

(2) The impact test requirements I and II are applied to the following welding materials:

I : (a) Manual arc welding electrodes.
(b) Wires and wire-gas combinations for semi-automatic multi-run welding.

II: (a) Wire-flux combinations for submerged-arc automatic welding.
(b) Wires and wire-gas combinations for automatic welding.
(c) Electro-slag and electro-gas welding material.
(d) One side automatic welding material.

(3) The specified minimum value of absorbed energy is required to the average value of three impact test specimens.

(4) In case, the tested tensile strength exceeds the required upper limit, special consideration may be given to the approval, other mechanical test results and the chemical composition of the deposited metal being taken into consideration.

(5) For manual arc welding electrodes, Grade 1Y is not applicable.

Table XII 4-3
Butt Weld Test Requirements of Welding Materials for Hull Construction Steels

<table>
<tr><th rowspan="3">Grade of Welding Materials</th><th>Transverse Tensile Test (1)</th><th>Bending Test</th><th colspan="3">Impact Test (2), (3)</th></tr>
<tr><th>Tensile Strength min. (N/mm^2)</th><th>Mandrel Dia. × Angle (t = thickness of test specimens)</th><th>Test Temperature (°C)</th><th colspan="2">Absorbed energy min. (J)</th></tr>
<tr><th>I</th><th>II</th></tr>
<tr><td>1</td><td rowspan="3">400</td><td rowspan="9">3t × 120°</td><td>20</td><td rowspan="3">47</td><td rowspan="3">34</td></tr>
<tr><td>2</td><td>0</td></tr>
<tr><td>3</td><td>–20</td></tr>
<tr><td>1Y (4)</td><td rowspan="4">490</td><td>20</td><td rowspan="4">47</td><td rowspan="4">34</td></tr>
<tr><td>2Y</td><td>0</td></tr>
<tr><td>3Y</td><td>–20</td></tr>
<tr><td>4Y</td><td>–40</td></tr>
<tr><td>2Y40</td><td rowspan="3">510</td><td>0</td><td rowspan="3">47</td><td rowspan="3">39</td></tr>
<tr><td>3Y40</td><td>–20</td></tr>
<tr><td>4Y40</td><td>–40</td></tr>
<tr><td>2Y47</td><td rowspan="3">570 - 720</td><td rowspan="3">4t × 120°</td><td>0</td><td colspan="2" rowspan="3">53</td></tr>
<tr><td>3Y47</td><td>–20</td></tr>
<tr><td>4Y47</td><td>–40</td></tr>
<tr><td>nY42</td><td>530</td><td rowspan="3">4t × 120°</td><td rowspan="6">–20 for n = 3
–40 for n = 4
–60 for n = 5</td><td colspan="2">47</td></tr>
<tr><td>nY46</td><td>570</td><td colspan="2">47</td></tr>
<tr><td>nY50</td><td>610</td><td colspan="2">50</td></tr>
<tr><td>nY55</td><td>670</td><td rowspan="3">5t × 120°</td><td colspan="2">55</td></tr>
<tr><td>nY62</td><td>720</td><td colspan="2">62</td></tr>
<tr><td>nY69</td><td>770</td><td colspan="2">69</td></tr>
</table>

Notes:

(1) For the longitudinal tensile test, the tensile test requirements of deposited metal tests specified in Table XII 4-2 are applicable.

(2) The impact test requirements I and II are applicable to the following welding materials:

I : (a)Manual arc welding electrodes - Downhand and Horizontal.
(b)Wires and wire-gas combinations for semi-automatic multi-run welding - Downhand and Horizontal.

II: (a)Manual arc welding electrodes - Vertical.
(b)Wires and wire-gas combinations for semi-automatic multi-run welding - Vertical.
(c)Wires and wire-gas combinations for automatic welding.
(d)Wire-flux combinations for submerged-arc automatic welding.
(e)Electro-slag and electro-gas welding material.
(f)One side automatic welding material.

(3) The specified minimum value of absorbed energy is required to the average value of three impact test specimens.

(4) For manual arc welding electrodes, Grade 1Y is not applicable.

Table XII 4-4
Test Requirements of Welding Materials for Low Temperature Service Steels

Grade of Welding Material	Deposited Metal Test					Butt Weld Test (1)			
	Tensile Test			Impact Test (2)		Transverse Tensile Test	Bending Test	Impact Test (2)	
	Tensile Strength min. (N/mm^2)	Yield Stress min. (N/mm^2)	Elongation on L=5D min. (%)	Test Temperature (°C)	Absorbed Energy min. (J)	Tensile Strength min. (N/mm^2)	Mandrel Dia. × Angle	Test Temperature (°C)	Absorbed Energy min. (J)
L1	400	305	22	-40	47	400	3t x 120° (t=thickness of test specimens)	-40	34
L1Y	490	375		-60		490		-60	
L2	420	340	25	-80	34	450		-80	27
L2Y	500	375		-110		540		-110	
L3Y	600	410		-196		660		-196	

Notes:

(1) For longitudinal tensile test in butt weld test, the tensile test requirements of deposited metal test are applicable.

(2) The specified minimum value of absorbed energy is required to the average value of three impact test specimens.

Table XII 4-5
Test Requirements of Welding Material for Stainless Steels

Grade of Steels to be welded	Deposited Metal Test			Butt Weld Test(See Note)	
	Tensile Test			Transverse Tensile Test	Bending Test
	Tensile Strength min. (N/mm^2)	0.2% Proof Stress min. (N/mm^2)	Elongation on L=5D min. (%)	Tensile Strength min. (N/mm^2)	Mandrel Dia. × Angle
S304	550	225	35	520	3t × 120° (t = thickness of test specimens)
S304L	510	205	35	480	
S316	550	225	30	520	
S316L	510	205	35	480	
S321	550	225	30	520	
S347	550	225	30	520	

Note:

In case longitudinal tensile tests in butt weld test are required, the deposited metal tensile test requirements are to be applied to the longitudinal tensile test.

Table XII 4-6
Approval Tests for Manual Arc Welding Electrodes (Deposited Metal Tests and Butt Weld Tests)

Tests	Test Assemblies					No. of Test Specimens to be taken from each Test Assembly for Tests
	Welding Positions	Dia. of Electrode to be used (mm)	No. of Set	Plate Thickness (mm)	Dimensions	
Deposited Metal (1)	Downhand (2)	4	1	20	See Fig. XII 4-1	1 —Deposited tensile and 1 —3 Impact
		Largest dia.	1			
Butt Weld (3)	Downhand	1st run : 4 Last 2 runs : Largest dia. Remaining runs : ≥5 (6)	1	15-20	See Fig. XII 4-2	1 — Transverse tensile. 1 — Face bending. 1 — Root bending and 1 — 3 Impact. (7)
		1st run : 4 2nd run : 5 or 6 Remaining runs : Largest dia. (6)	1 (4)			
	Horizontal (5)	1st run : 4 or 5 Remaining runs : 5 (6)	1			
	Vertical-upward	1st run : 3.2 Remaining runs : 4 or 5 (8)	1			
	Vertical-downward	Recommended by the manufacturer	1			
	Overhead	1st run : 3.2 Remaining runs : 4 or 5 (8)	1			

Notes:

(1) The weld metal is to be deposited in single or multi-run layers according to normal practice, and the direction of deposition of each layer is to alternate from each end of the plate, each run of weld metal being not less than 2 mm and not more than 4 mm thick.

(2) If an electrode is produced in one diameter only or if the largest diameter produced is not more than 4 mm, one test assembly is sufficient.

(3) For all butt weld test assemblies, the back sealing run is to be made with 4 mm diameter electrodes in the welding position appropriate to each test assembly after back chipping. For electrodes available for downhand welding only, test assemblies may be turned over to weld the back sealing run.

(4) The second downhand test assembly is only required to the electrode which is to be approved in downhand position only.

(5) Where an electrode has satisfied the requirements for downhand and vertical positions, the test for horizontal position may be omitted in case the largest dia. available for horizontal position is not larger than that for vertical position.

(6) If an electrode is produced in one diameter only or if the largest diameter produced is not more than 4 mm, the largest diameter electrode available for use in such welding position concerned is to be used for all runs. If the largest diameter produced is not more than 5 mm, the largest diameter of electrode available for use in such welding position concerned is to be used for remaining runs after 1st run.

(7) The impact test is not required for butt weld tests welded in overhead position.

(8) If an electrode is produced in one diameter only or if the largest diameter produced is not more than 3.2 mm, the largest diameter electrode available for use in such welding position concerned is to be used for all runs. If the largest diameter produced is not more than 4 mm, the largest diameter of electrode available for use in such welding position concerned is to be used for remaining runs after 1st run.

Table XII 4-7
Approval Tests for Manual Arc Welding Electrodes (Fillet Weld Tests)

Fillet Weld Test Assemblies					No. of Test Specimens
Welding Positions	Dia. of Electrode to be used	No. of Set	Plate Thickness (mm)	Dimensions	to be taken from each Test Assembly for Tests
Downhand	1st side: Largest diameter 2nd side: Smallest diameter	1	20	See Fig. XII 4-3	3 – Macro-etching / Hardness and 2 – Fracture
Horizontal (See Note)		1			
Vertical-upward		1			
Vertical-downward		1			
Overhead		1			

Note:

Where an electrode has satisfied the requirements for downhand and vertical positions, the test for horizontal position may be omitted in case the largest dia. available for horizontal position is not larger than that for vertical position.

Table XII 4-8
Approval Tests for Semi-Automatic Welding Materials

Tests	Test Assemblies					No. of Test Specimens
	Welding Positions	Dia. of Wire to be used (mm)	No. of set	Plate Thickness (mm)	Dimensions	to be taken from each Test Assembly for Tests
Deposited Metal (1), (2)	Downhand	Largest dia.	1	20	See Fig. XII 4-1	1 –Deposited tensile and 1 – 3 Impact
		Smallest dia.	1			
Butt Weld (3), (7)	Downhand (4)	1st run: smallest dia. Remaining runs: largest dia.	1	15 ~ 20	See Fig. XII 4-2	1 – Transverse tensile, 1 – Face bending, 1 – Root bending and 1 – 3 Impact (6)
	Horizontal (5)	1st run: smallest dia. Remaining runs: Largest dia. available for the position concerned.	1			
	Vertical		1			
	Overhead		1			
Fillet Weld (8)	Downhand	1.2	1	20	See Fig. XII 4-3	3 – Macro-etching/ Hardness and 2 – Fracture
		1.6	1			

Note:

(1) Where a welding material is available in one diameter only, one test assembly prepared by this size is sufficient.

(2) The weld metal is to be deposited according to the practice recommended by the manufacturer, and the thickness of each layer of weld metal is to be between 2 mm and 6 mm.

(3) For all butt weld test assemblies, the back sealing run is to be made with smallest dia. of wire in the welding position appropriate to each assembly after back chipping. For welding materials available for downhand welding only, test assemblies may be turned over to weld the back sealing run.

(4) Where approval is requested only in the downhand position, an additional butt weld test assembly is to be prepared in that position using wires of different diameters.

(5) Where a welding material has satisfied the requirements for downhand and vertical positions, the test for horizontal position may be omitted in case the largest dia. available for horizontal position is not larger than for vertical position.

(6) The impact test is not required for butt weld tests welded in overhead position.

(7) Where a welding material solely intended for fillet welding, the butt weld test is not required, and fillet weld tests are to be tested by each one test assembly prepared in every welding positions which are intended to be approved.

(8) Where a welding material solely intended for butt welding, the fillet weld test is not required.

Table XII 4-9
Approval Tests for Automatic Welding Materials (Multi-Run Technique)

Tests	Test Assemblies				No. of Test Specimens to be taken from each Test Assembly for Tests
	Welding Positions	No. of Set	Plate Thickness (mm)	Dimensions	
Deposited Metal (1), (3)	Downhand	1	20	See Fig. XII 4-5	2 – Deposited tensile, and 1 – 3 Impact
Butt Weld (2), (3), (4)	Downhand	1	20-25	See Fig. XII 4-6	2 – Transverse tensile, 2 – Face bending, 2 – Root bending, and 1 – 3 Impact

Notes:

(1) For deposited metal test assembly, the thickness of each layer is not to be less than the size of wire or 4 mm, whichever is the greater in the case of wire-flux combinations, and is not to be less than 3 mm in the case of wires and wire-gas combinations.

(2) The back sealing run of the butt weld test assembly is to be applied in downhand position. Prior to the back sealing run, the back chipping may be carried out.

(3) For both test assemblies, the direction of deposition of each run is to alternate from each end of the plate in the making of test assemblies.

(4) Where a welding material intended to be also approved for other welding positions than downhand, each one butt weld test assembly by those welding positions are also to be prepared. In this case, the transverse tensile, face bending and root bending test specimens taken from each butt weld test assembly may be reduced to each one piece.

Table XII 4-10
Approval Tests for Automatic Welding Materials (Two-Run Technique)

Welding Materials		Butt Weld Test Assemblies (1)						No. of Test Specimens to be taken from each Test Assembly for Tests
		Wire Size to be used	No. of Set	Plate Thickness (mm)	Dimensions	Typical Edge Preparation (3)		
Submerged Arc Welding Wire-Flux Combinations	Grades 1 and 1Y	max. 5 mm	1	12-15	See Fig. XII 4-7	(a)	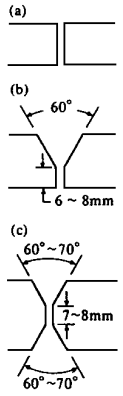	1-Longitudinal tensile. (1),(6),(7) 2-Transverse tensile. 1-Face bending. 1-Root bending and 1-3 Impact. (1), (8)
		max. 6 mm	1	20-25		(b)		
	Grades 2, 3, 2Y, 3Y and 4Y	max. 6 mm	1	20-25		(b)		
		max. 7 mm	1	30-35 (2)		(c)		
Wires or Wire-Gas Combinations (For normal strength and higher strength Steels, but excluding H47) (4)		Smallest size	1	12-15		(b)		
		Largest size	1	20-25 or Max. thickness		(c)		
Wire-Flux Combinations Wires or Wire-Gas Combinations (For Low Temperature Service Steels)		Smallest size	1	12-15		(a) or (b)		
		Largest size	1	Max. thickness		(5)		

Notes:

(1) The butt weld test assemblies are to be welded one pass on each side of the plate by same size of wire in downhand position. Where a welding material intended to be also approved for other welding positions than downhand, each one additional test assembly for such welding positions are to be prepared by the applicable largest size of wire. For these test assemblies, the longitudinal tensile test specimen is not required, and, if any, the impact test is also not required for overhead position. Between each pass, the assembly is to be left in still air until it has cooled to 100°C, the temperature being taken in the center of the weld, on the surface of the seam.

(2) In case the applicable max. thickness is different from the listed thickness range, the plate thickness for preparation of test assemblies may be recommended by the manufacturer.

(3) Small deviations in the edge preparation may be allowed if requested by the manufacturer.

(4) Modifications in the plate thickness and edge preparation for the test assemblies of wires and wire-combinations as recommended by the manufacturer may be accepted.

(5) The edge preparation for test assemblies prepared by max. thickness of plate is to be decided by the recommendations of the manufacturer.

(6) The longitudinal tensile test specimen is only to be taken from the thicker test assembly and is to have the longitudinal axis coincided with the center of the weld about 7 mm below the plate surface on the side from which the second run is made.

(7) Where a welding material has been approved or intended to be approved for multi-run technique welding, the longitudinal tensile test in this two-run technique approval test may be omitted.

(8) The positions of impact test specimens are to be taken as follows:

(a) For assembly thickness ≤ 15 mm.

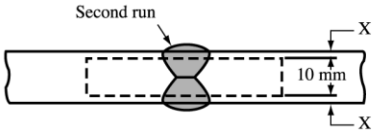

(b) For assembly thickness > 15 mm

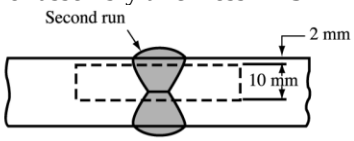

(9) The root gap is not exceed 1.0 mm on the butt weld test assembly for Submerged Arc Welding Wire-Flux Combinations.

Table XII 4-11
Approval Tests for One-side Welding Materials

Welding Techniques Intended for Approval	Butt Weld Test Assemblies (1), (2)					No. of Test Specimens to be taken from each Test Assembly for Tests
	Plate Thickness (mm)		No. of Set	Welding Technique	Dimensions	
	Single Electrode	Multiple Electrode				
One-run	12-15		1	One-run	See Fig. XII 4-8	1－Longitudinal tensile. 2－Transverse tensile. 1－Face bending. 1－Root bending. 1－Macro-etching and 1－3 Impact, for assembly thickness≦15mm 2－3 Impact, for assembly thickness＞15mm. (3)
	20-25		1			
Multi-run	12-15	20-25	1	Multi-run		
	20-25	30-35	1			
Both One-run and Multi-run	12-15		1	One-run		
	20-25	30-35	1	Multi-run		

Notes:

(1) The welding conditions and the edge preparation adopted are to be in accordance with the recommendations of the manufacturer and are to be reported.

(2) The plates for preparing test assemblies in other thickness than listed in this Table as recommended by the Manufacturer may be accepted. For nY47 grades, where n is to be 2, 3 or 4, the thicker test assembly is to be prepared from the maximum thickness for which approval is required, and the thinner test assembly is to be prepared from 50 mm thickness. Where approval is required for 50 mm thickness, only one test assembly from that thickness is required.

(3) The impact test specimens are to be taken from the positions as shown in the following figure. For test assemblies thickness ≦15 mm, only one set of three impact test specimens is to be taken from the position near the root of butt. For test assemblies of thickness 50 mm or more, 3 sets of three impact test specimens positioned and notched in accordance with Fig. (b) as follow and the third set positioned in the mid-thickness of test assemblies.

(a) For assembly thickness ≤ 25 mm.

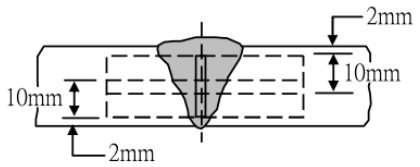

(b) For assembly thickness > 25 mm.

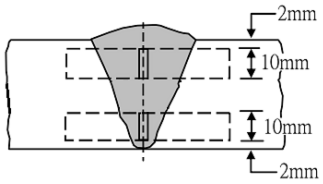

Table XII 4-12
Approval Tests for Electro-slag and Electro-gas Welding Materials

Butt Weld Test Assemblies (1)			No. of Test Specimens to be taken from each Test Assembly for Tests
Plate Thickness (mm)	No. of Set	Dimensions	
20-25	1	See Fig. XII 4-9	2 — Longitudinal tensile. 2 — Transverse tensile. 2 — Side bending. 2 — 3 Impact, (2) 1 — Longitudinal Macro-etching (3) and 1 — Transverse Macro-etching (4)
35-40	1		

Notes:

(1) The welding conditions and the edge preparation adopted are to be in accordance with the recommendations of the manufacturer and are to be reported.

(2) Each set of three impact test specimens is to be taken from the positions shown as follows:

(a) One set is to be notched at center line of weld : (b) Another set is to be notched at fusion line of welding:

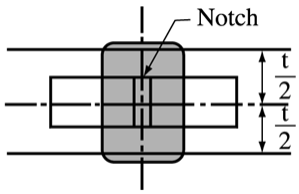

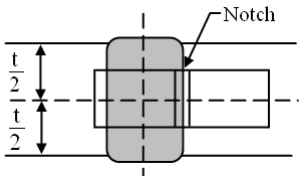

(3) Longitudinal macro-etching means to examine the longitudinal section of the butt weld joint, where the section surface is parallel to the assembly plate surface in way of half thickness of the plate.

(4) Transverse macro-etching means to examine the transverse section of the butt weld joint, where the section surface is perpendicular to the assembly plate surface.

Table XII 4-13
Annual Test for Approved Steel Welding Materials

Welding Materials	Welding Process	Tests	Test Assemblies			No. of Test Specimens to be taken from each Test Assembly for Tests
			No. of Set	Dia. of Electrode / Wire to be used (mm)	Plate Thickness (mm)	
Manual Arc Electrodes (1)	Manual	Deposited Metal	1	4 (2)	20	1 — Deposited tensile and 1 — 3 Impact
			1	largest dia.		
Wire-flux Combinations, Wires, Wire-Gas Combinations (3)	Semi-Automatic Multi-run	Deposited Metal	1	By the size within the approved range	20	1 — Deposited tensile and 1 — 3 Impact
	Automatic Multi-run		1			
	Automatic Two-run	Butt Weld	1		20-25	1 — Longitudinal tensile.(3) 1 — Transverse tensile. 1 — Face bending. 1 — Root bending. and (5) 1 — 3 Impact (6)
	One-side Automatic (4)		1			
	Electro-slag		1			
	Electro-gas		1			

Notes:

(1) If an electrode is produced in one diameter only or if the largest diameter produced is not more than 4 mm, one test assembly is sufficient. Where an electrode is approved solely for gravity or contact welding, one deposited metal tests of 4 mm diameter electrode using the gravity or other contact device as recommended by the manufacturer.

(2) Where deemed necessary by the Society, butt weld tests in the downhand or vertical welding position can be required in lieu of the deposit metal tests of 4 mm diameter electrode. One set of three impact test specimens are to be taken from the butt weld assembly.

(3) Where an automatic welding material is approved for both multi-run and two-run techniques, the annual test requirements for both techniques are to be complied with; in this case, the longitudinal tensile test specimen taken from two-run technique test assembly may be omitted.

(4) Where a one-side automatic welding material is approved for both one-run and multi-run techniques, the annual test assembly is to be prepared by one-run welding.

(5) Bending test for electo-slag and electro-gas welding materials is to be tested by two pieces of side bending test specimens instead of face and root bendings.

(6) For one-side, electro-slag and electro-gas welding materials, impact test specimens are to be taken from the position as following:
(a) One-side welding: 2 mm above the plate surface at root side.
(b) Electro-slag or electro-gas welding: notched at center line of the weld.

Table XII 4-14
Welding Material Grades and Base Materials for the Approval Test (Aluminium Alloy)

Grade of Welding Materials	Base Material for the Tests (1)	
	Alloy Designation (2)	
	Numerical Material Grade	Chem. Symbol
RA/WA	5754	A1Mg3
RB/WB	5086	AlMg4
RC/WC	5083	A1Mg4.5Mn0.7
	5383	A1Mg4.5Mn0.9
	5456	AlMg5
	5059	- - -
RD/WD	6005A	AlSiMg(A)
	6061	AlMglSiCu
	6082	AlSi1MgMn

Notes:

(1) Approval on higher strength A1Mg base materials covers also the lower strength A1Mg grades and their combination with A1Si grades.

(2) The numerical material grades are based on those of the Aluminium Alloy Association.

Table XII 4-15
Composition Limits of Shielding Gases and Mixtures for the Approval Tests (Aluminium Alloy)

Group	Gas Composition (Vol. %)	
	Argon	Helium (He)
I - 1	100	---
I - 2	---	100
I - 3	Rest	He ≤ 33
I - 4	Rest	33 < He ≤ 66
I - 5	Rest	66 < He ≤ 95
S	Special gas, composition to be specified.	

Note:

Gases of other chemical composition (mixed gases) may be considered as "special gasses" and covered by a separate test.

Table XII 4-16
Butt Weld Test Requirements of Aluminium Alloy Welding Materials

Grade of Welding Material	Base material used for the test	Tensile Strength N/mm^2 (min.)	Bending (See Note) Mandrel Dia. × Angle
RA/WA	5754	190	3t ×180°
RB/WB	5086	240	6t ×180°
RC/WC	5083	275	6t ×180°
	5383 or 5456	290	6t ×180°
	5059	330	6t ×180°
RD/WD	6061, 6005A or 6082	170	6t ×180°

Note:

During testing, the test specimen is not revealed any one single flaw greater than 3 mm in any direction. Flaws appearing at the corners of a test specimen is to be ignored in the evaluation, unless there is evidence that they result from lack of fusion.

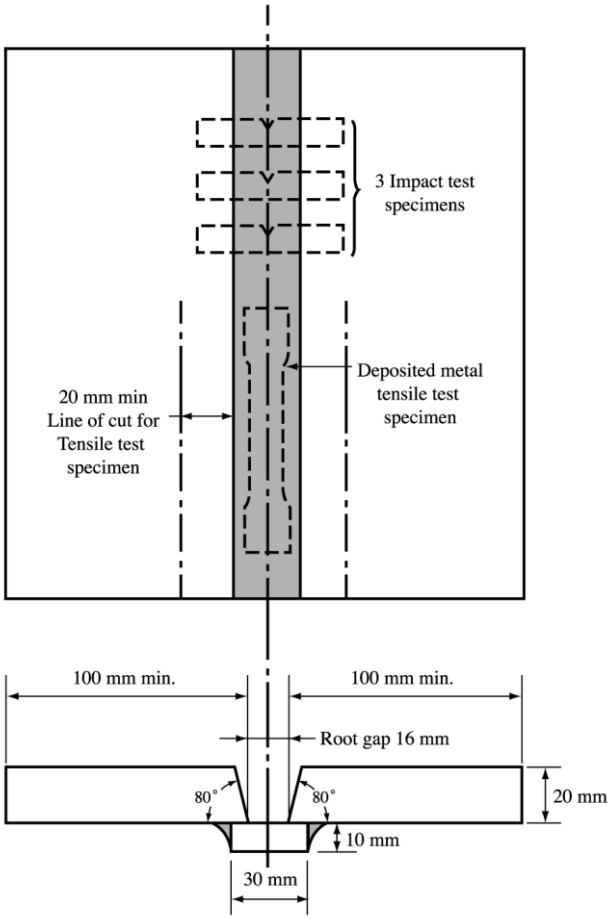

Fig. XII 4-1
Deposited Metal Test Assembly for Manual Arc Welding Electrodes and Semi-Automatic Welding Materials

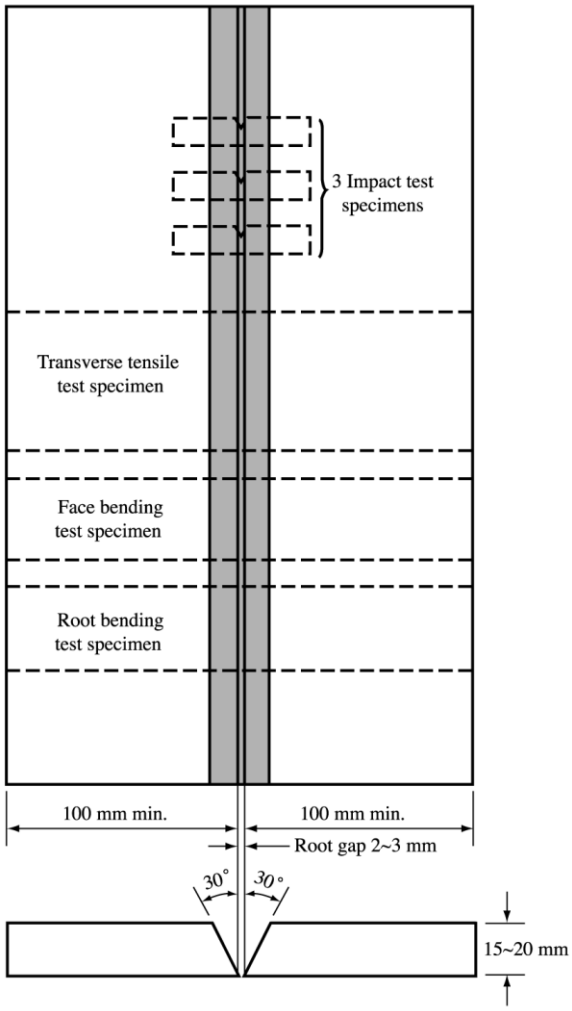

Fig. XII 4-2
Butt Weld Test Assemble for Manual Arc Welding Electrodes and Semi-Automatic Welding Material

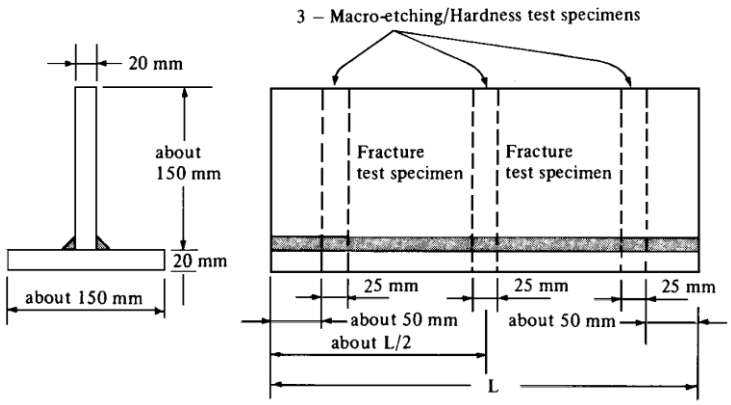

Fig. XII 4-3
Fillet Weld Test Assembly

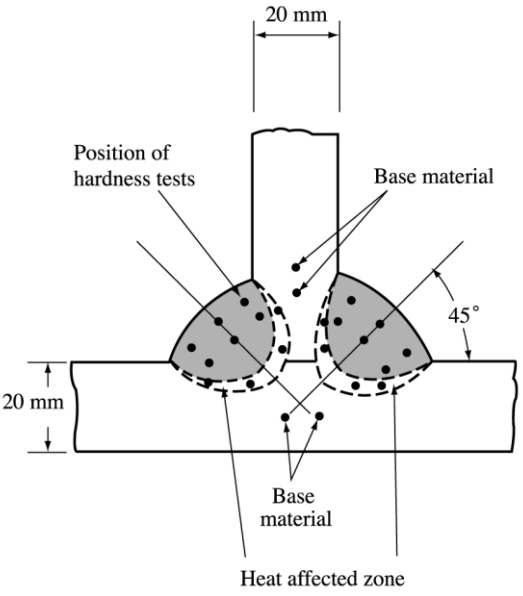

Fig. XII 4-4
Hardness Tests for Fillet Weld Test

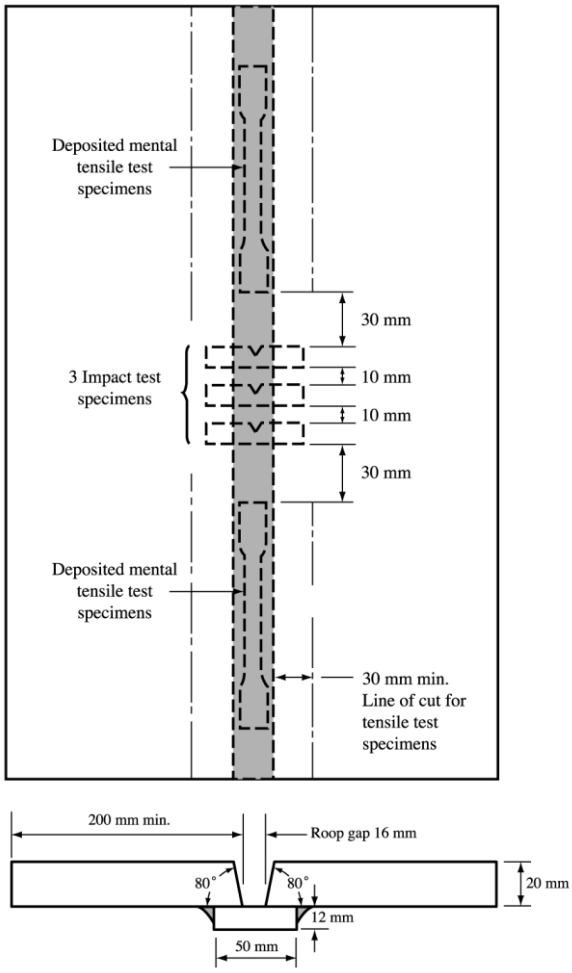

Fig. XII 4-5
Deposited Metal Test Assembly for Automatic Multi-run Technique Welding Materials

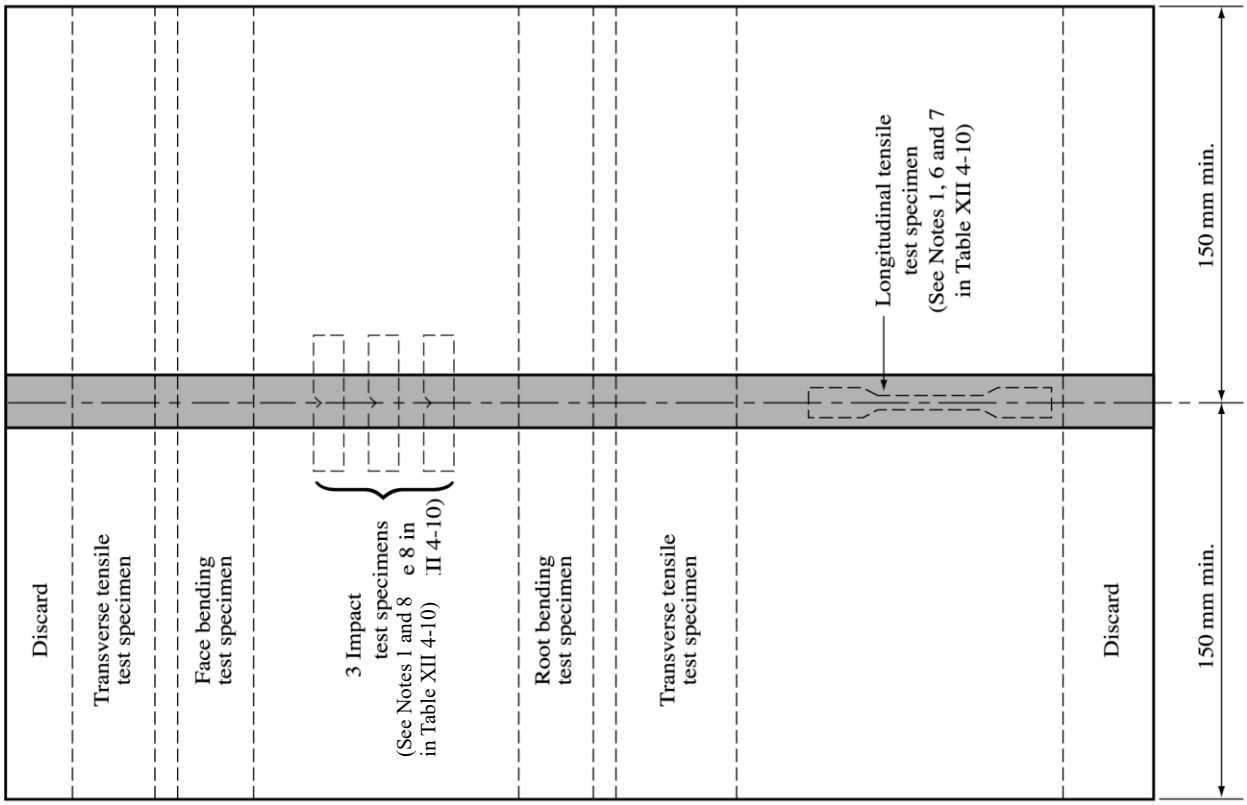

Fig. XII 4-7 Butt Weld Test Assembly for Automatic Two-run Technique Welding Materials

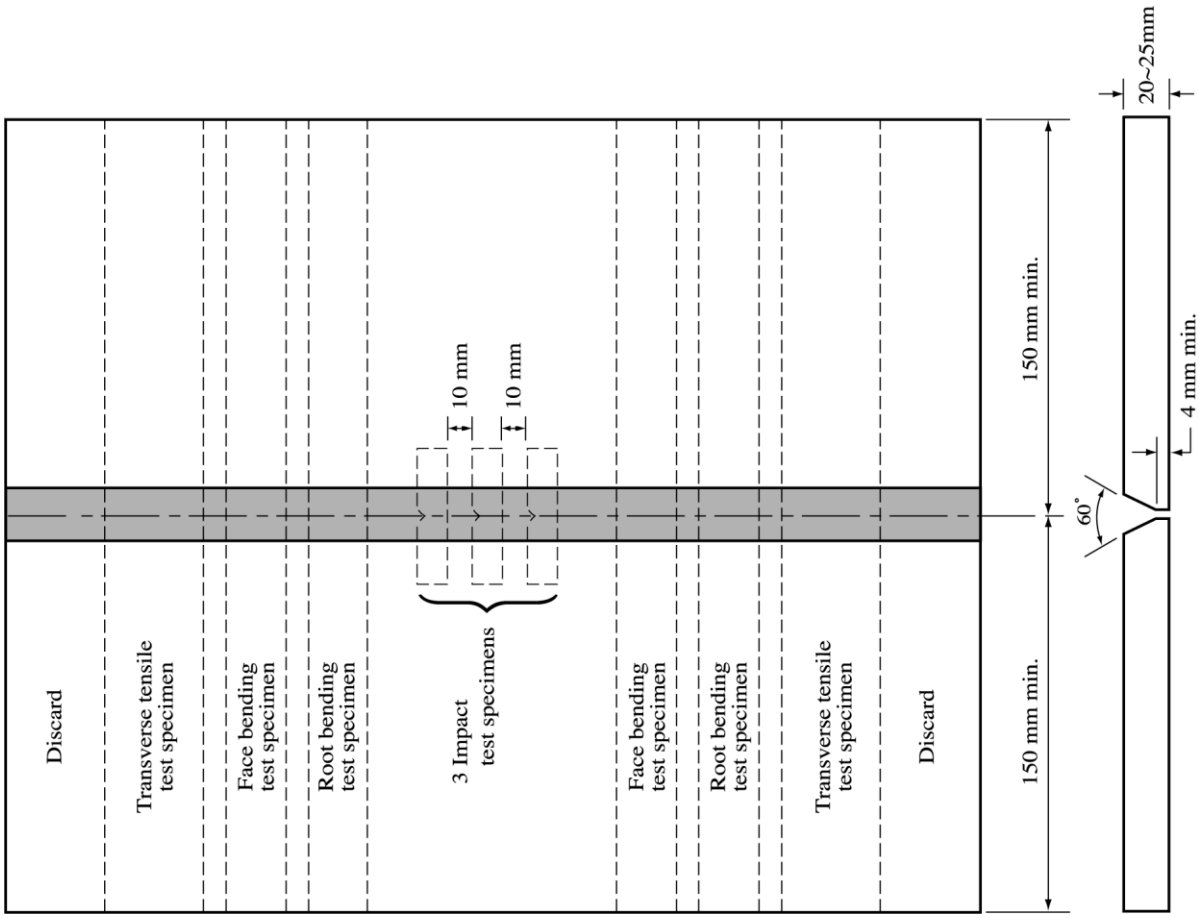

Fig. XII 4-6 Butt Weld Test Assembly for Automatic Multi-run Technique Welding Materials

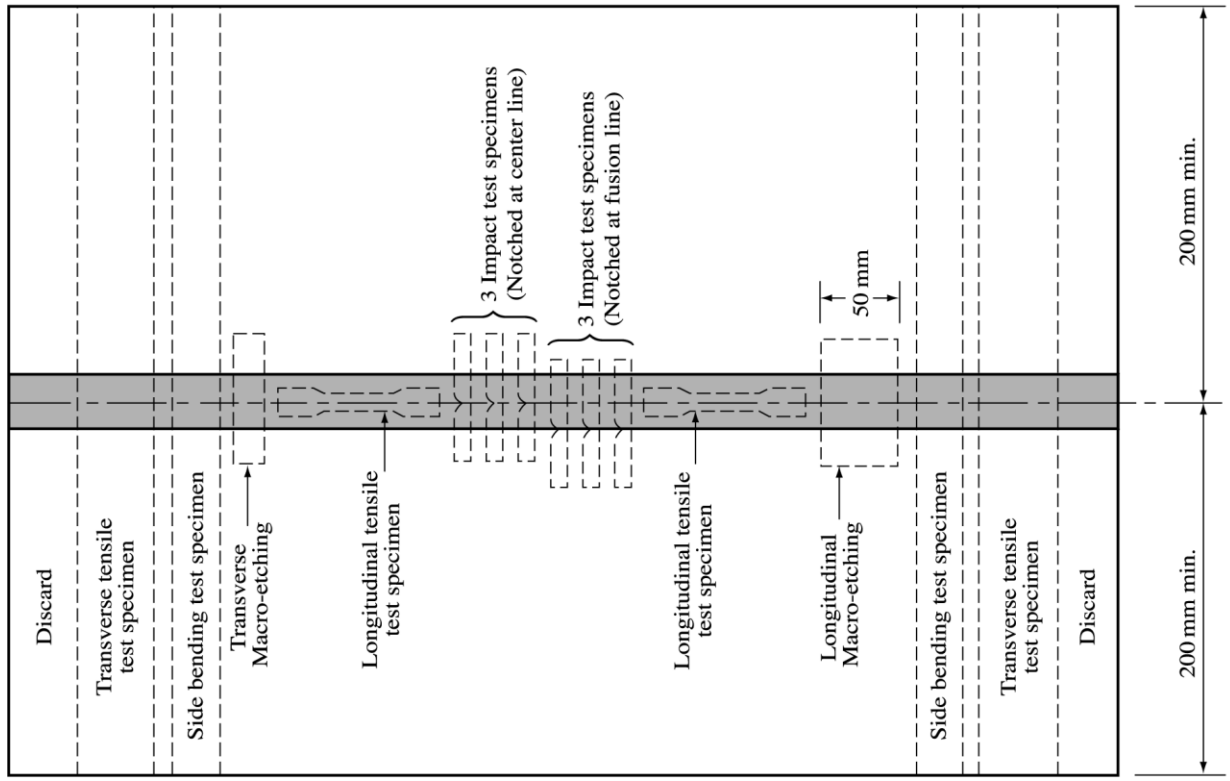

Fig. XII 4-9 Butt Weld Test Assembly for Electro-slag or Electro-gas Welding Materials

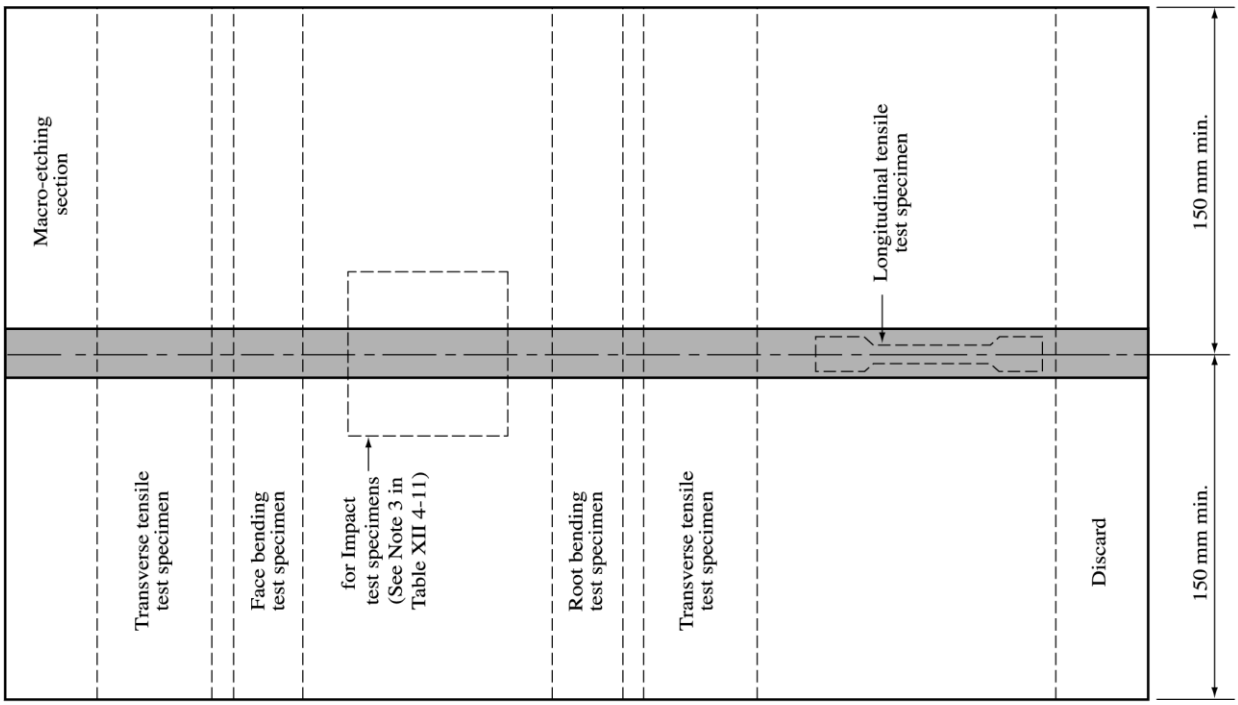

Fig. XII 4-8 Butt Weld Test Assembly for One-side Welding Materials

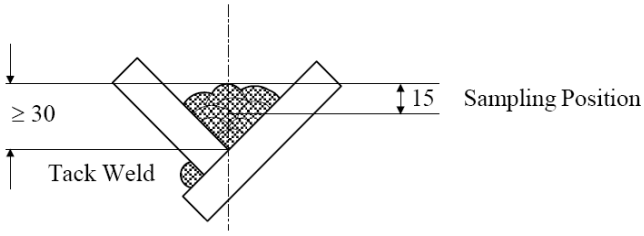

Fig. XII 4-10
Deposited Metal Test Assembly (Aluminum Alloy)

T = Flat tensile test specimen
B_c = Face bend test specimen
B_R = Root bend test specimen
M = Macrographic section

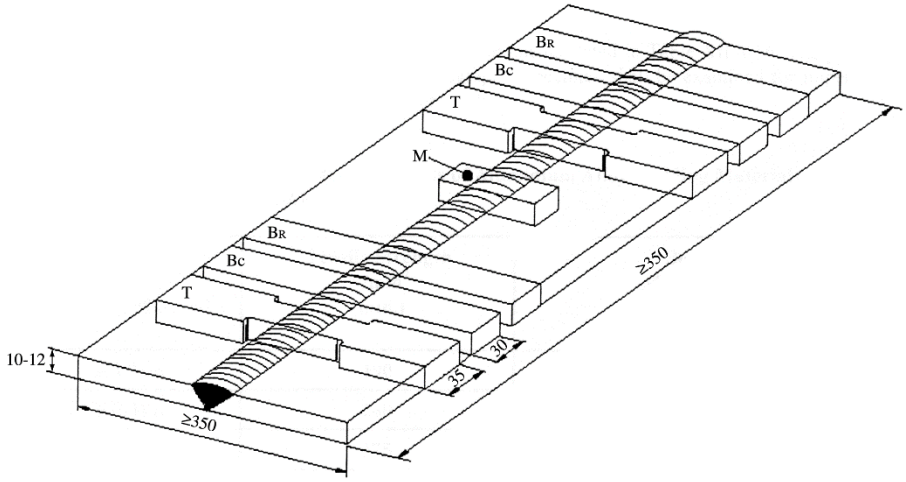

Notes: 1. Edge preparation is to be single V or double V with 70° angle.
2. Back sealing runs are allowed in single V weld assemblies.
3. In case of double V assembly both sides are to be welded in the same welding position.

Fig. XII 4-11
Butt Weld Test Assembly for Positional Welding (Aluminum Alloy)

T = Flat tensile test specimen
B_c = Face bend test specimen
B_R = Root bend test specimen
M = Macrographic section

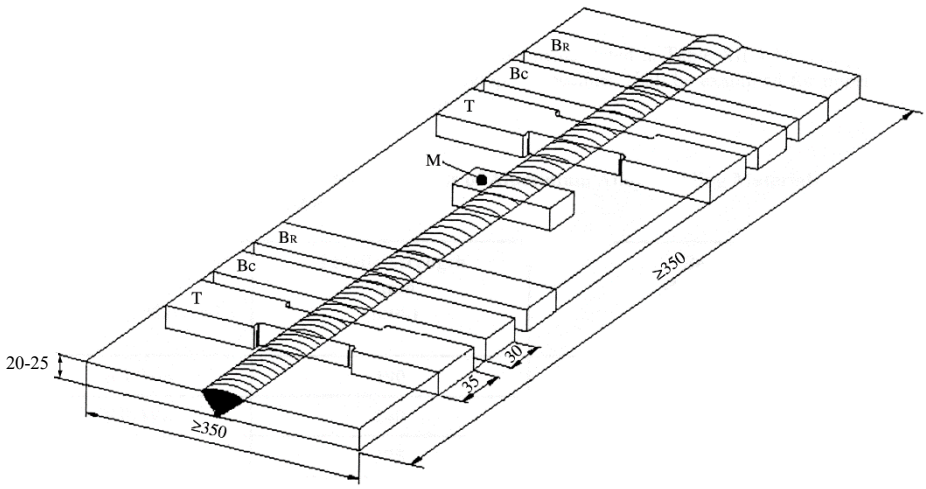

Notes: 1.Edge preparation is to be a single V with 70° angle
2.Back sealing runs are allowed.

Fig. XII 4-12
Additional Butt Weld Test Assembly in Downhand Position (Aluminum Alloy)

Chapter 5
Welding Constructions

5.1 General

5.1.1 For the welding proposed to be used, details regarding the process, extend, joint design, welding material, base material, procedure, sequence and workmanship are to be shown clearly in the drawings or in the specifications and submitted to the Society for approval prior to welding works.

5.1.2 Before undertaking the welding, the shipyard or manufacturer is to prove to the Surveyor that the welding procedures and the welding materials have been approved and that welders are duly qualified for the work intended in accordance with Chapter 2, 3 and 4 of this Part. Welding work is to be carried out by certified welders, with approved welding procedures and welding materials.

5.1.3 The shipyard or manufacturer is to establish the methods to prevent the misuse of materials.

5.2 Workmanship

5.2.1 Structural arrangements are to be such as shall admit of easy access for welding and inspection and shall facilitate the use of downhand welding wherever possible.

5.2.2 Every precaution is to be taken to avoid structural discontinuity. Sudden changes of shapes or sections are, therefore, to be avoided, and all corners are to be well rounded. Brackets and stiffeners are not to terminate on an un-stiffened plate or flange. Local concentrations of welds are also to be avoided.

5.2.3 Where welds cross supporting members, special attention is to be paid to the joint design so that full penetration can be achieved in the butt weld.

5.2.4 The welding sequence is to be so carefully planned that the welding, in general, is to progress in a symmetrical manner, from the center towards the ends and the sides and that parts may contract freely and the shrinkage may be equally distributed.

5.2.5 All surfaces to be welded are to be cleaned, dried and kept free from rust, scale and grease. Paintings of welding portion are not to give harmful effect to the quality of welds. The surface and boundary of each run of deposit are to be thoroughly cleaned and kept free from slag before the next run is applied.

5.2.6 Edge preparations are to be accurate and uniform. Parts to be welded are to be fitted in accordance with approved joint details. Means are to be provided for holding parts to be welded in correct position and alignment during welding operation without undue restraint. Excessive force is not to be used in fairing and closing the work. Where excessive gaps exist between surfaces or edges to be joined corrective measures adopted are to be to the Surveyor's satisfaction. For butt welded joints of plates with thickness difference exceeding 4 mm, the thickener plate is to be suitably tapered.

5.2.7 Tack welding is to be kept to a minimum, and where used, is not to become a part of finished welds unless they are found to be of equal quality and free from cracks or other defects. Any defect on the surface of base material after the removal of temporary fittings is to be carefully repaired and dressed to the satisfaction of the Surveyor.

5.2.8 Proper precautions are to be taken to ensure that all welding be done under protection against the deleterious effects of moisture, wind and severe cold. Welding materials are to be kept clean and dry and subjected to proper drying before welding.

5.2.9 The deposit metal is to be fused smoothly and uniformly into the base material, and there is not to be any injurious defect, such as crack, porosity, undercut, overlap, etc. Arc strike on the surface of base material is to be avoided as far as possible. Arc is to be struck in the weld groove.

5.2.10 Preheating of welding joints is to be employed when necessitated by the strength, dimension, chemical composition and heat-treatment of the base materials to be welded and the ambient condition.

5.2.11 Post-weld heat treatment may be required for welded structures subjected to high restraint during production or intended to be used under high pressure, high temperature or excessive low temperature, etc.

5.3 Welding Practices

5.3.1 Joints welded by welding techniques are generally to be carried out in accordance with approved welding procedures.

5.3.2 Manual Butt welding

(a) The edge dimension and shape of plates to be joined are to be prepared to insure thorough fusion and complete penetration at the root of joints. In general, plates exceeding 6 mm in thickness to be joined are to be beveled on one or both edges of the plate, in the case of V type edge shape, an included angle of not less than 45° is to be provided.

(b) Double-welded butt joints

Manual Welding butt joints are normally to be prepared by V, U, X or H shape of edge (see Fig. XII 5-1) and to be welded from both sides. The root face or shoulder is not to exceed 3 mm in depth and the root opening or gap between plates is not to be less than 2 mm nor more than 5 mm. Except in the case of V or U joints welded in downhand position where tight fit may be used. The reverse side is to be prepared by gouging, chipping, grinding, or otherwise cleaning out, so as to secure sound metal at the base of weld metal first deposited before applying weld metal from the reverse side unless approved otherwise.

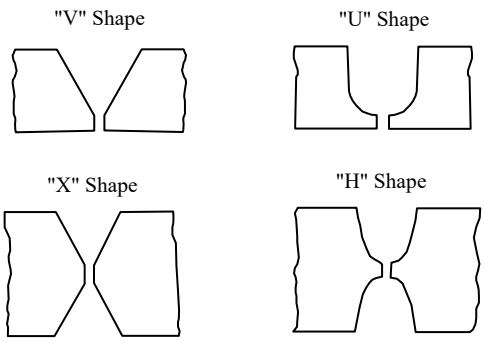

Fig. XII 5-1
Shapes of Edge Preparation

(c) Single-welded butt joints

(i) V or U shape edge joints provided with backing strap, using ordinary welding techniques and welded from one side only may be accepted in lieu of double-welded butt joints. The edges to be joined are to be spaced an adequate root gap.

(ii) Unless otherwise specified in the Rules, minor joints in a structure prepared in V or U shape edge, where the reverse side is impracticable for welding, may be welded by ordinary welding techniques from one side only without backing strap with the approval of the Surveyor. The edges of such joints are to be carefully aligned and so arranged as to insure complete penetration and fusion at the root of the joints.

5.3.3 Fillet welds

(a) The connection of T type abutting members is normally to be made by fillet welds. The sizes of fillet welds are to be indicated on detail drawings or on a separate welding schedule and are subject to approval in each case.

(b) Tee-joints are generally to be made by fillet welds on both sides of the abutting plate. Where the connection is highly stressed, deep penetration or full penetration welding may be required. Where deep penetration or full penetration welding is required, the abutting plate may be required to be beveled. Where the connection is moderately stressed, intermittent welds in staggered or chained type as shown in Fig. XII 5-2 may be used.

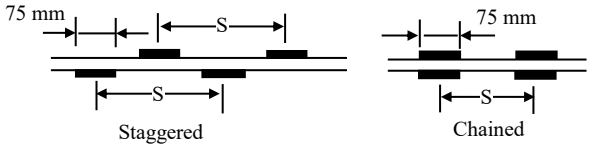

Fig. XII 5-2
Types of Intermittent Weld

(c) Where the gap between faying surfaces of members exceeds 2.0 mm and is not greater than 5 mm, the weld leg size is to be increased by the amount of the opening. Where the gap between members is greater than 5 mm, fillet weld sizes and welding procedures are to be specially approved by the Surveyor. The weld throat thickness is not to be less than 70% of the weld leg length.

(d) Where structural members pass through the boundary of a tank, and leakage into the adjacent space could be hazardous or undesirable, full penetration welding is to be adopted for the members for at least 150 mm on each side of the boundary. Alternatively a small scallop of suitable shape may be cut in the member close to the boundary outside the compartment, and carefully welded all round.

(e) Where intermittent welding is used, the double continuous welding is to be made an ample length of and carried round at the ends of abutting members and at orthogonal connections with other members. The pitch of intermittent weld is to be measured over the correctly proportioned fillet, clear of end craters.

5.3.4 Lapped joints

(a) Unless otherwise prescribed in the Rules, lapped joints are generally to have overlaps of not less than twice the thinner plate thickness plus 25 mm. Both edges of an overlap joint are to be continuously fillet welded.

(b) Overlapped end joints used in way of important structures, such as longitudinal strength members of hull within 0.4 L amidships, machinery parts, boilers and pressure vessels subjected to high stress, are to have continuous fillet welds on both edges each equal in leg size to the thickness of the thinner of the two plates joined. Other overlapped end joints are to have continuous welds on each edge of leg size that the sum of the two is not less than 1.5 times the thickness of the thinner plate.

5.3.5 Plug or slot welds

(a) Plug welds or slot welds may be specially approved for particular applications. Where used in the body of doublers and similar locations, such welds may be spaced about 300 mm between centers in both directions.

(b) Where the plug weld is unavailable, it is to be of the oval hole of sufficient size to permit a thoroughly fused bead to be supplied all round the bottom edge of the opening.

5.3.6 Automatic and semi-automatic welding

Proper precautions are to be taken to the accuracy of edge preparation and fit-up of the parts to be joined by welding, the edges be kept particularly free from grease, moisture and any foreign matters. The welding voltage, current and speed are to be carefully adjusted and maintained by the operator.

5.4 Post Weld Heat Treatment for Machineries, Boilers, Pressure Vessels and Piping

5.4.1 Procedure of post weld heat treatment

(a) For welds using carbon steel, carbon manganese steel and low alloy steel, as the base metal, stress-relieving procedures by the post weld heat treatment are generally to be of the furnace heating method and the local heating method as specified in Table XII 5-1.

Table XII 5-1
Post Weld Heat Treatment for Machinery Constructions

Kind of Steel	Furnace Temp. (°C)	Rate of Heating and Cooling (°C/h)	Min. Holding Temp.(2), (3) T (°C)	Min. Holding Time (h)	Heating Band in Local Heating Method
Carbon steel C-Mn steel 0.5 Mo steel 0.5 Cr-0.5 Mo steel 1 Cr-0.5 Mo steel $1\frac{1}{4}\mathrm{Cr}-0.5\mathrm{Mo}$ steel	< 400 When the object is placed in or out of furnace.	Above 400°C, 1. Heating: $\leq 220 \times \frac{25}{t}$, but in no case more than 220. 2. Cooling $\leq 275 \times \frac{25}{t}$, but in no case more than 275. (1)	600	$\frac{t}{25}$ (4)	1. Longitudinal joint: ≥ 6t each side measured from the center of weld. 2. Circumferential joint: ≥ 3t but 2t for piping on outer side of the welding bead of max. width.
$2\frac{1}{4}\ \mathrm{Cr}-1\ \mathrm{Mo}$ steel $5\mathrm{Cr}-0.5\mathrm{Mo}$ steel			680		
Where: t = Thickness of welded part, in mm.					

Notes:

(1) During the heating and cooling periods, there is not to be a greater variation in temperature throughout the portion being heated than 130°C within any 4,500 mm interval of length.

(2) During the temperature holding period, there is not to be a greater difference than 80°C between the highest and the lowest temperatures throughout the portion being heated.

(3) The maximum heating temperature at each portion of the object is not to exceed 20°C below the final temperature of heat treatment for the base metal.

(4) The Society is prepared to give special consideration to reduce the minimum holding temperature and its minimum holding time as follows:

Min. Holding Temp. (°C)	Min. Holding Time (h)	Notes
T – 30 T – 60 T – 90 (See Note 1)	2 3 5	1. Applicable to carbon steel and C-Mn steel only. 2. Intermediate values are to be obtained by interpolation.
Where: T = Minimum holding temperature in main table of Table XII 5-1.		

(b) For post weld heat treatment procedures on materials other than those specified in 5.4.1(a) above, a special consideration is to be given by the Society according to the base metal, the welding material and the welding procedure.

(c) Attention is to be paid to the post weld heat treatment of low alloy steels, alloy steels and other special steels to avoid of undue degrading of the notch toughness the material and crack caused by heat treatment.

5.4.2 Temperature measurements and recording during post weld heat treatment

(a) In general, temperature measurements are to be carried out automatically by thermocouples. However, where the temperature of each part of the heated object can be readily assumed on the basis of the furnace temperature, such furnace temperature may be used in place of the temperature of the heated object.

(b) When post weld heat treatment is carried out, the following items are to be recorded:

(i) Type and kind of furnace or heating equipment.

(ii) Holding temperature and period.

(iii) Rate of heating and cooling.

(iv) Other items as deemed necessary.

5.5 Welding of Ship Constructions

5.5.1 When welding is used in the construction of hull and important equipment, following plans are to be submitted for approval prior to welding works.

(a) Plans indicating the arrangement of the plating, grade of materials and type of joints together with the proposed sequence of prefabrication, assembly and welding, and the kinds of welding procedures which are applied.

(b) Plans indicating details of welded connections of main structural members with types and size of welds.

5.5.2 Welding materials

(a) The application of welding materials for welded joints of various grades of steel is to be as specified in Table XII 5-2.

Table XII 5-2
Application of Welding Materials for Hull Constructions

Grade of Welding Materials to be Applied	Grade of Steel to be Welded
1	A
2	A, B or D
3	A, B, D or E
1Y	A, AH32 or AH36
2Y	A, B, D, AH32, AH36, DH32 or DH36
3Y	A, B, D, E, AH32, AH36, DH32, DH36, EH32 or EH36
4Y	A, B, D, E, AH32, AH36, DH32, DH36, EH32, EH36, FH32 or FH36
2Y40	A, B, D, AH32, AH36, AH40, DH32, DH36 or DH40
2Y47	AH40, DH40, AH47 or DH47
3Y40	A, B, D, E, AH32, AH36, AH40, DH32, DH36, DH40, EH32, EH36 or EH40
3Y47	AH40, DH40, EH40, AH47, DH47 or EH47
4Y40	A, B, D, E, AH32, AH36, AH40, DH32, DH36, DH40, EH32, EH36, EH40, FH32, FH36 or FH40
4Y47	AH40, DH40, EH40, FH40, AH47, DH47, EH47or FH47
3Y42	AH32, AH36, AH40, DH32, DH36, DH40, EH32, EH36, EH40, A420 or D420
3Y46	AH40, DH40, EH40, A420, D420, A460 or D460
3Y50	A420, D420, A460, D460, A500 or D500
3Y55	A500, D500, A550 or D550
3Y62	A550, D550, A620 or D620
3Y69	A620, D620, A690 or D690
4Y42	AH32, AH36, AH40, DH32, DH36, DH40, EH32, EH36, EH40, FH32, FH36, FH40, A420, D420 or E420
4Y46	AH40, DH40, EH40, FH40, A420, D420, E420, A460, D460 or E460
4Y50	A420, D420, E420, A460, D460, E460, A500, D500 or E500
4Y55	A500, D500, E500, A550, D550 or E550
4Y62	A550, D550, E550, A620, D620 or E620
4Y69	A620, D620, E620, A690, D690 or E690
5Y42	AH32, AH36, AH40, DH32, DH36, DH40, EH32, EH36, EH40, FH32, FH36, FH40, A420, D420, E420 or F420
5Y46	AH40, DH40, EH40, FH40, A420, D420, E420, F420, A460, D460, E460 or F460
5Y50	A420, D420, E420, F420, A460, D460, E460, F460, A500, D500, E500 or F500
5Y55	A500, D500, E500, F500, A550, D550, E550 or F550
5Y62	A550, D550, E550, F550, A620, D620, E620 or F620
5Y69	A620, D620, E620, F620, A690, D690, E690 or F690

Notes:

(1) For the joining of different grade of same strength level steels, welding materials suitable for the lower grade of steels are generally acceptable except at discontinuities or other points of stress concentration.

(2) For the joining of steels of different strength level, welding materials suitable for the lower strength level of steels are generally acceptable provided that adequate means for preventing cracks are considered.

(b) In general, low hydrogen welding material is to be used for the welding of

(i) Important hull strength members, especially for ships in length over 90 m,

(ii) Very thick members,

(iii) Hull castings and forgings,

(iv) Members which are under restraint during welding operations, and

(v) Higher strength steels and extra high strength steels.

(c) The application of welding materials for welded joints of various grades of aluminum alloy is to be as specified in Table XII 4-14 of this Part.

5.5.3 Workmanship

(a) Welding is to be planned to progress symmetrically so that shrinkage on both sides of the structure will be equalized. The welding sequence is to be such that the parts may as far as possible contract freely in order to avoid cracks in already deposited runs of weld. Where a butt meets a seam, the welding of the seam is to be interrupted well clear of the junction and not be continued until the butt is completed. Welding of butts is to continue past the open seam and the weld be chipped out for the seam to be welded straight through.

(b) Adequate protection is to be provided where welding is required to be carried out in exposed positions in wet, windy or cold weather. In cold weather, precautions are to be taken to preheat the object and screen where necessary to prevent too rapid cooling of the weld; special care is to be taken when welding thick materials, higher strength steels and extra high strength steels.

5.5.4 Structural welding

(a) Details of welding joints are to be in accordance with the requirements given in 5.3 of this Chapter.

(b) The size of fillet welds is to comply with the requirements given in Table XII 5-3. Tee-joint fillet welds are to have at least the size of double continuous or intermittent welding as given in Table XII 5-4.

(c) In case of oil tanker, special requirements of fillet weld for cargo space as given in Table XII 5-5 are also to be complied with.

Table XII 5-3
Size of Fillet Welds for Hull Constructions

Thickness of Plate to be Welded (t) (mm)	Min. Leg Length of Fillet Welds (a) (mm)				
	Type 1	Type 2	Type 3	Type 4	Type 5
Up to 5	4.0	4.0	3.5	3.5	3.0
6	4.5	4.0	4.0	3.5	3.0
7	5.5	5.0	4.5	4.0	3.5
8	6.0	5.5	5.0	4.0	4.0
9	6.5	6.0	5.0	4.5	4.0
10	7.5	6.5	5.5	4.5	4.5
11	|	7.0	6.0	5.0	4.5
12	|	|	6.0	5.5	5.0
13	|	|	|	5.5	5.0
14	|	|	|	6.0	5.0
15	|	|	|	6.0	5.5
16	|	|	|	|	5.5
17	0.72t	0.625t	|	|	5.5
18	|	|	|	|	6.0
19	|	|	0.5t	|	6.0
20	|	|	|	0.4t	6.0
21	|	|	|	|	|
22	|	|	|	|	|
23	|	|	|	|	0.3t
24	|	|	|	|	|
25	|	|	|	|	|

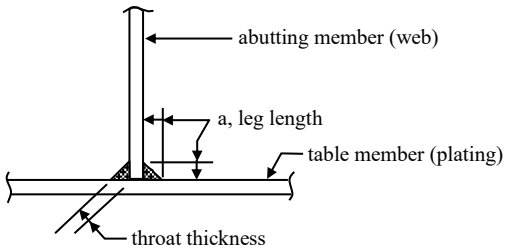

Notes:
1. Except otherwise specified, the leg length of the fillet weld is to be determined by the lesser thickness of the two members being joined.
2. The throat thickness of the weld is not to be less than 70% of the leg length.
3. For plates exceeding 25 mm in thickness, on which the fillet size is based, the leg length is to be specially considered.
4. Where the difference in thickness of the two members joined is considerable, the leg length of the fillet weld is to be specially considered.

Table XII 5-4
Fillet Welds for Hull Constructions

Connection of Structural Members			Fillet Welds	
			Double Continuous	Intermittent
			Type of fillet weld size	Pitch (S) (All with 75 mm long of Type 2 filled weld)
A. GENERAL APPLICATIONS				
1. Watertight or oiltight boundaries			3	
2. Stiffening members	(a) Top face plating	(i) In tanks	5 (3)	250
		(ii) Clear of tanks		300
	(b) End attachments (4)	(i) Unbracketed	2	
		(ii) Bracketed	3	
3. Longitudinal strength members	(a) End connections (4)	(i) Clipped	1	
		(ii) Bracketed	2	
B. SINGLE BOTTOM				
1. Floor plates	(a) To shell	(i) In strengthened bottom forward, peaks and deep tanks		200
		(ii) Elsewhere		300
	(b) End connections	(i) To side shell or long'l bulkhead	3	
		(ii) To center or side keelsons	4	
	(c) To face plate	(i) In engine room		200
		(ii) Elsewhere		300
2. Center keelson	(a) To plate keel	(i) In strengthened bottom forward	4	
		(ii) Elsewhere		200
	(b) To face plate			
3. Side keelsons	(a) To shell	(i) In strengthened bottom forward		200
		(ii) Elsewhere		300
	(b) To face plate	(i) In engine room		200
		(ii) Elsewhere		300
4. Bottom frames	(a) To shell	(i) In strengthened bottom forward	5 (3)	200
		(ii) Elsewhere		as A, 2 (a)
C. DOUBLE BOTTOM				
1. Solid floors	(a) To shell	(i) In strengthened bottom forward and peaks		200
		(ii) Elsewhere		300
	(b) To inner bottom	(i) In engine room	3	
		(ii) In strengthened bottom forward		200
		(iii) Elsewhere		300
	(c) To center or side girders		4	
	(d) Ends to margin plate or bilge shell		3	
	(e) Boundaries of floor under bulkhead		3	
	(f) Stiffeners	(i) On tank end floor or floor under bulkhead	4 (3)	150
		(ii) Elsewhere	5 (3)	as A, 2 (a)
2. Open floors	(a) Bottom frame or reverse frame to shell or inner bottom			as A, 2 (a)
	(b) Struts	(i) To girders	5	
		(ii) To bottom or reverse frames	3	

(To be continued)

Table XII 5-4
(Continued)

3. Longitudinal frames and intermediate frames	(a) To shell	(i) In strengthened bottom forward	5 (3)	200
		(ii) Elsewhere		as A, 2 (a)
	(b) To inner bottom	(i) In engine room	5 (3)	200
		(ii) Elsewhere		as A, 2 (a)
4. Center girder	(a) To shell	(i) In strengthened bottom forward	3	
		(ii) Elsewhere	5	
	(b) To inner bottom	(i) In engine room	3	
		(ii) Elsewhere	5	
5. Side girders	(a) To shell	(i) In strengthened bottom forward		200
		(ii) Elsewhere		300
	(b) To inner bottom	(i) In engine room		200
		(ii) Elsewhere		300
6. Brackets	(a) To girders		4	
	(b) To margin plate or bilge shell		3	
D. FRAMES				
1. Bottom frames	(a) To bottom shell	(i) In strengthened bottom forward	5 (3)	200
		(ii) Elsewhere		as A, 2 (a)
2. Side frames	(b) To side shell	(i) In peaks	5	
		(ii) Elsewhere	as A, 2 (a)	
E. PRIMARY SUPPORTING MEMBERS (GIRDERS, STRINGERS, TRANSVERSE WEBS)				
1. Web plates	(a) To plating	(i) Stringers in peaks	3	
		(ii) Elsewhere	5 (3)	200
	(b) To face plate	(i) When face plate sectional area ≤ 65 cm^2		250
		(ii) When face plate sectional area > 65 cm^2		200
2. End attachments (4)	(a) Clipped		2	
	(b) Bracketed		3	
F. BULKHEADS (including boundary bulkheads of superstructures and deck houses)				
1. Plating	(a) Tight boundaries		3	
	(b) Elsewhere		5	
G. DECK				
1. Boundary of plating	(a) Tight boundaries, strength deck, exposed deck		3	
	(b) Elsewhere		5	
H. HATCHWAYS				
1. Hatch coaming, hatch side girder and hatch end beams	(a) To deck		3	
	(b) To face plate		3	
	(c) Stays		4	
2. Hatch covers	(a) Plating	(i) Tight boundaries	3	
		(ii) Elsewhere		250
	(b) Stiffners, webs	(i) To plating		
		(ii) To face plate		
I. ENGINE SEATINGS (5)				
1. For main engine, thrust bearing and major auxiliaries			2	
2. For boiler and other auxiliaries			3	

(to be continued)

Table XII 5-4
(Continued)

J. RUDDER			
1. Horizontal webs	(a) To side plating		150
	(b) To vertical webs	5	
	(c) To main piece	3	
2. Vertical webs	(a) To side plating		150
	(b) To top and bottom plates	3	
3. Main piece	(a) To side plating	2	
	(b) To top and bottom casting	Full penetration welds	
4. Side plating slot welding (6)		2	

Notes:

(1) The structure connection in way of stress concentrated portions are to be double continuously welded in an ample length with the fillet size at least of Type 3.

(2) Where double continuous welding is intended to be substituted for intermittent welding, 150 mm in pitch of intermittent weld may be substituted by Type 4 double continuous weld, and 200 mm and more in pitch may be by Type 5.

(3) For stiffening members and primary supporting members, where the thickness of the web exceeds the thickness of the plating, the welding is to be double continuous with the fillet size based on the thickness of the plating or based on the half thickness of the web, whichever is the greater.

(4) For longitudinal strength members, stiffening members and primary supporting members, the welding of end connections is to be such that the area of welding is not less than the cross-sectional area of the members.

(5) Where hull structural members form or adjoint to engine seatings, the welding requirements of item I are to be applied.

(6) The fillet size of slot welding is to be based on the thickness of the rudder side plating.

(7) The welding requirements for structure connections other than those specified in this table are to be specially considered.

(8) For special requirements of oil tankers, see Table XII 5-5.

Table XII 5-5
Special Requirements of Fillet Weld for Cargo Spaces of Oil Tankers

Connection of Structural Members			Fillet Welds	
			Double Continuous	Intermittent
			Type of fillet weld size	Pitch (S) (All with 75 mm long of Type 2 filled weld)
A. PRIMARY SUPPORTING MEMBERS				
1. Web plates	(a) To plating (See Note 2)	(i) Bottom	2	
		(ii) Else wheres	3	
	(b) To face plate			150
2. End connections		(See Note 4 in Table XII 5-3)	2	
B. BULKHEADS				
1. Boundaries of oiltight bulkheads	(a) Longitudinal bulkheads		2	
	(b) Transverse bulkheads	(i) Bottom	2	
		(ii) Elsewhere	3	
2. Boundaries of non-tight bulkheads	(a) As a primary supporting member		as A, 1 (a)	
	(b) Elsewhere		5	
C. SECONDARY SUPPORTING MEMBERS (Stiffening members)				
1. To bottom shell			5	
2. To elsewhere			as A, 2 in Table XII 5-4	
3. End attachments				

Notes:

(1) The requirements in this table are to be also applied to the ballast spaces in cargo spaces region.

(2) In case the shearing force over the mid-half span of the primary supporting member is comparatively small, the fillet size within the mid-half span may be reduced provided with the web is of the same depth clear of end brackets and of same thickness throughout the length of the members.

5.5.5 Non-destructive examinations

(a) Important welds are to be examined by radiographic examinations or other approved means in positions indicated by the Surveyor. Particular attention is to be paid to butts and cross welds of the strength deck, sheer strake, side and bilge strakes, bottom and keel plates within the 0.4 L amidships.

(b) In ships over 150 m in length, all cross welds of erection butts and seams within 0.4 L amidships are to be radiographically examined.

(c) Random checks are to be made to butts of longitudinal bulkhead, butts of longitudinal stiffeners and girders which contribute to the longitudinal strength, butts of inner bottom, and joints of insert plates in way of openings.

(d) Welds for thick members, especially those made under restraint such as stern frames, masts and posts, shaft brackets, etc. are to be examined by radiographic examinations or other non-destructive examinations accepted by the Surveyors.

(e) The soundness of the welds of hull construction are to be complied, unless otherwise specified, with ISO 5817 level C for ferrous materials or ISO 10042 level C for aluminium alloy, or equivalent specifications. For critical areas of hull construction, which in way of critical load transfer points and large stress concentrations where a failure will endanger the safety of the ship, more stringent requirements such as ISO 5817 level B for ferrous materials or ISO 10042 level B for aluminium alloy, or equivalent specifications, may be applied.

(f) All injurious defects are to be carefully removed, re-welded and rechecked.

(g) Special considerations of welding examination are to be given to ships of novel design or for special purposes.

5.6 Welding of Machinery Constructions

5.6.1 Welded constructions of machinery parts are to be so designed that numbers of weld joints are reduced to a minimum and intersections of weld joints are to be avoided as far as possible. Weld joints are to be so arranged as to ensure full penetration and to weld and inspect effectively. In particular, fillet welds are to be avoided on forgings or castings. Butt-weld joints are to include a back welding as far as possible and thicker plates are to be gradually tapered down to that of thinner plates where plates of unequal thickness are joined.

5.6.2 When it is intended to build welded constructions for special services, or to use new materials in which there have been no previous experiences, or to use new welding processes, the procedures to be adopted are to be approved by the Society in advance.

5.6.3 Rolled steel plates and sections used for welded frames and bedplates of machinery as well as forged steels, hot rolled steel bars and cast steels used for welded construction parts of machinery are to be of welding quality with a carbon content generally not exceeding 0.23% for forged and cast steels, 0.35% for others, and of not a rimming steel unless specially approved otherwise.

5.6.4 Preparations and executions of welding, and preheating, stress relieving and inspections of welded construction part of machinery are to be done in accordance with the requirements stated in 5.1 to 5.5 of this Chapter, if applicable.

5.7 Welding of Boilers and Pressure Vessels

5.7.1 Application

Pressure parts of boilers and pressure vessels together with their accessories may be fabricated by means of an approved process of welding in accordance with the following requirements and to comply with all other respects with the applicable requirements of Chapter 2 in Part V.

5.7.2 Workmanship

(a) Where plates of unequal thicknesses are to be joined in a butt weld; the thicker plate is to be reduced to approximately the thickness of the thinner plate with an inclination of not more than 1/4. In this case, the reduction in thickness may be made on only one side for circumferential joints; however, for longitudinal joints, in general, the reduction is to be made on both sides so as to coincide the center lines of both plates. Where the reduction in thickness is made on one side, the distance between center lines of the weld and commencement of the inclination is to be at least equal to the thickness of the thinner plate (See Fig. XII 5-3).

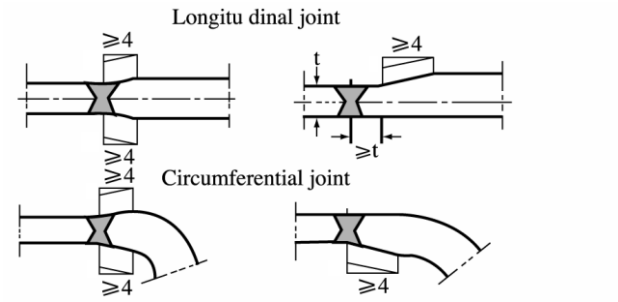

Fig. XII 5-3
Butt-welded Joints for Plates of Unequal Thickness

(b) The welded part is to be so designed as not to be subjected to the direct bending stress. Where the construction is such that bending stress is concentrated at the bottom of the weld due to deformation caused by bending, single welded butt joints or fillet welding are to be avoided.

(c) Misalignment of joints

Butting edges of plates are to be in line within a limited allowance of misalignment as shown in Table XII 5-6.

Table XII 5-6
Allowable Misalignment for Butt Joints of Boilers and Pressure Vessels

Butt Weld Joints	Plate Thickness t(mm) (See Note)	Max. Allowable Misaligment	
		Group I	Groups II and III
Longitudinal Joint	t ≤ 20	1.0 mm	2.0 mm
	t > 20	0.05t (max. 3 mm)	0.10t (max. 6 mm)
Circumferential Joint	t ≤ 15	1.5 mm	2.5 mm
	t > 15	0.10t (max. 6 mm)	0.10t + 1 mm (max. 12 mm)

Note: Where t is thickness of the thinner plate at the butt joint.

(d) Measurement of deformation

Deformation of pressure vessels of cylindrical type is to be measured upon completion of the welding or after heat treating where heat treatment is required. The shell of a drum is to be cylindrical within a limit of 1% based on the difference between the maximum and minimum diameters of any section and there is to be no flat part on welded line.

5.7.3 Post weld heat treatment for boilers

(a) Each boiler is to be subjected to post weld heat treatment for stress relieving after completion of welding work of all fittings such as nozzles, compensating plates, etc.

(b) However, the following parts may be exempted from post weld heat treatment where the thickness of welded part does not exceed 19 mm for carbon steel or 13 mm for alloy steel:

(i) Welded joints between tubes, tubes and tube flanges and tubes and headers.

(ii) Circumferential joints of headers.

(iii) Welded parts specially approved by the Society.

(c) The following fillet welded connections may be added to a boiler which has been post weld heat treated without further stress relieving:

(i) Seal welding applied to boilers provided that it does not fear to induce a remarkable strain.

(ii) Intermittent welding applied to add inside and outside attachments on boilers provided that the welds do not exceed 6 mm in throat thickness and 50 mm in length having an interval of 50 mm and more.

5.7.4 Stress relieving for pressure vessels

(a) Pressure vessels of Group I are to be subjected to post weld heat treatment for stress relieving after all fittings such as nozzles, flanges, compensating plates, etc. have been welded in place.

(b) Pressure vessels of Group II may be exempted from stress relieving except the following cases:

(i) Where the thickness of shell plates exceeds 30 mm, or

(ii) Where the thickness of shell plates is not less than 16 mm and is greater than $\frac{D}{120} + 10$ mm, in which D is the inside diameter of shell in mm.

(c) Notwithstanding the requirements in 5.7.4(a) and (b) above, the mechanical stress relieving by pressurizing for pressure vessels made of carbon steel or C-Mn steel may be employed as an alternative to the post weld heat treatment with the approval of the Society subject to the following conditions:

(i) Complicated welded parts of pressure vessels, such as nozzles, are to be heat treated before they are welded to large parts of the pressure vessels.

(ii) The plate thickness is not to exceed 40 mm.

(iii) A detailed stress analysis is made to ascertain that the maximum primary membrane stress during the mechanical stress relieving closely approaches, but does not exceed, 90% of the yield stress of the material. Strain measurements during the stress relief pressurization may be required by the Society for verifying the calculations.

(iv) The procedure for mechanical stress relieving is to be submitted for approval by the Society prior to the work is commenced.

(d) Where pressure vessels are made of materials having superior notch toughness, stress relieving may be omitted when specially approved by the Society in a particular case.

(e) The following welded connections may be added to a pressure vessel which has been post weld stress relieved without further stress relieving:

(i) For carbon steels and C-Mn steels

(1) Where fittings with inside diameter not exceeding 50 mm are added by fillet welding with throat thickness of 12 mm and under.

(2) Where fittings not subjected to the pressure are added by fillet welding with throat thickness of 12 mm and under.

(3) Where parts are stud welded.

(ii) For welds of other materials except those specified in 5.7.4(e)(i) above, the omission of further stress relieving is to be specially approved by the Society. In this case, appropriate preheating is to be carried out during the welding.

5.7.5 Workmanship tests of welding

(a) Applications

(i) Longitudinal welding joints on the shell of Groups I and II Boilers and Pressure Vessels are to be subjected to a satisfactory workmanship test by method of butt weld test.

(ii) Workmanship test for circumferential joints is not required, except in cases where a boiler has circumferential joints only, or a boiler or pressure vessel where the welding process of circumferential joints is significantly different from that used for the longitudinal joint.

(b) Preparation of test assemblies

(i) One set of test assembly is to be prepared for the longitudinal joints and, if required, for the circumferential joints on each boiler or pressure vessel. In cases where the joints are welded in significantly different process or in different construction, one set of test assembly for each joint is to be prepared.

(ii) Where a number of similar pressure vessels of Group II are produced at same time, only one set of test assembly is required to be prepared for each 30 meters of the combined total length of longitudinal and circumferential welding joints. In this case, the plates adopted in this lot of pressure vessels are not to vary by more than 5 mm in thickness, and plate for test assembly is to be taken from the thickest one.

(iii) The plates used for preparing test assembly are to be taken from the shell plate or from the plate in same charge and same heat to that adopted for the shell.

(iv) The butt weld test assembly as shown in Fig. XII 2-1 (Chapter 2 of this Part) with sufficient dimensions for preparing the necessary test specimens as required in Table XII 5-7 is to be attached to the shell plate in such a manner that edges to be welded are a continuation and simulation of corresponding edges of the shell joints. The welding process, procedure and technique are to be same as those adopted in the welding of the shell joints.

(v) Upon completion of welding, the test assembly is to be heat-treated in same furnace and same manner with the boiler or pressure vessel, for which the post weld heat treatment or stress relieving is required. The wrapped test assembly is to be straightened before being subjected to heat treat.

(c) Test Requirements

The necessary test specimens are to be taken from each test assembly and subjected to a satisfactory test in compliance with the requirements given in 1.3, 1.4 and Table XII 5-7 of this Part.

Table XII 5-7
Workmanship Tests of Welding for Boilers and Pressure Vessels

Test Items	No. of Test Specimen Required		Test Requirements
	Group I	Group II	
Transverse Tensile Test	One specimen (Fig. XII 1-1)	One specimen (Fig. XII 1-1)	1.To comply with the requirements given in 1.3.2(b) of this Part. 2.Results of tensile strength is not to be less than the specified min. tensile strength given for the plate material adopted. (1)
Bending Test	(2)	Not required	To comply with the requirements given in 1.3.3 of this Part.
Impact Test	One set of three specimens (Fig. XII 1-3) (3)	One set of three specimens (Fig. XII 1-3) (3)	1.To comply with the requirements given in 1.3.4 of this Part. 2.The average of absorbed energy and the test temperature are to comply with the requirements given for the plate material adopted.
Macro-etching Examination	Two transverse section	Not required	To comply with the requirements given in 1.4.2 of this Part.

Notes:

(1) If the tensile test specimen breaks at the base metal having a test result more than 95% of the specified min. tensile strength of the plate material adopted, the test may be considered as satisfactory, provided that the test specimen shows no sign of defect in the welded joint.

(2) No. of bending test specimens for Group I Boilers and Pressure Vessels are to be as follows:

Plate Thickness ≤ 19 mm : 1 Face and 1 root bending test specimens

Plate Thickness > 19 mm : 1 Side bending test specimen

(3) Where the impact test for plate material adopted is not required, the impact test in this workmanship test is also not necessary.

5.7.6 Non-destructive examinations

(a) The butt weld joints of the following boilers and pressure vessels are to be radiographically examined in full length:

(i) Both longitudinal and circumferential joints of Group I Boilers and Pressure vessels.

(ii) Longitudinal joints of Groups II and III Boilers or Pressure Vessels where the joint design is based on the use of joint efficiency for which the full radiographic examination is to be performed as given in Table V 2-2 of Part V.

(b) For Group II and III Boilers or Pressure Vessels where the longitudinal joint design is based on the use of joint efficiency for which the spot radiographic examination is to be performed as given in Table V 2-2 of Part V, the longitudinal butt joints are to be spot radiographically examined at least 20% of the total length of the joints (minimum 300 mm) together with the portions of circumferential joints across longitudinal joints.

(c) Surfaces of the weld on both the inside and outside are to be dressed smoothly by any mechanical process to permit an accurate radiographic examination. The finished surface of the reinforcement of all welded joints may be flushed with the plate or may have a reasonably uniform crown not to exceed the thickness as shown in Table XII 5-8.

Table XII 5-8
Thickness of Welding Reinforcement for
Radiographic Examination of Boilers and Pressure Vessels

Plate Thickness t (mm)	Thickness of Reinforcement (mm)	
	Double butt welded joint	Single butt welded joint
$t \leq 12$	1.5	1.5
$12 < t \leq 25$	2.5	1.5
$25 < t$	3.0	1.5

(d) The radiographic technique employed is to be such that the smallest diameter hole visible in the radiographic is not to exceed 3% of the weld thickness for welds not exceeding 50 mm thick, or 2.5% for welds exceeding 50 mm thick. Steps are to bear these proportions to the weld thickness radiographed, and the radiographic technique is to be capable of revealing changes of metal thickness of these percentages.

(e) The radiograph is to be marked in such a way that the corresponding portion of the welded joint can be readily and accurately identified.

(f) The radiograph is to be examined by the Surveyor on original films.

(g) Ultrasonic examination may be accepted as an alternative to radiographic examination. Supplementary examination by radiography at selected locations may be required in certain cases.

(h) For important welds other than those specified in 5.7.6(a) of Part XII, non-destructive examinations are to be carried out as considered appropriate.

(i) For carbon and carbon-manganese steel with thicknesses greater than 30 mm and for alloy steels, the non-destructive examination is normally to be carried out not earlier than 48 hours after completion of the welds in question. For carbon and carbon-manganese steels with thicknesses 30 mm and less the time limit may be reduced to 24 hours.

(j) The soundness of the weld is to be complied, unless otherwise specified, with ISO 5817 level B for ferrous materials or ISO 10042 level B for aluminum alloy, or equivalent specifications.

5.7.7 Repairs to welded joints

(a) For fully radiographically examined boilers or pressure vessels where reveal unacceptable defects in the welded joints, the defects are to be repaired and re-examined by radiography until Surveyor's satisfaction.

(b) For spot-radiographically examined boilers or pressure vessels where reveal unacceptable defects in a welded joint, at least 2 further radiographs are to be made in the length of weld represented by the first radiograph in locations selected by the Surveyor. If these reveal no further unacceptable defects, the defects revealed by the first radiograph are to be repaired and re-examined by radiography until Surveyor's satisfaction. If check radiographs reveal unacceptable defects, either.

(i) the whole length of weld represented is to be cut out and rewelded and then subjected to spot radiography as if it were a new weld, or

(ii) the whole length of weld represented is to be radiographed, and then such unacceptable defects are repaired and shown by radiograph to have been eliminated.

5.8 Welding of Piping

5.8.1 General

(a) Manual or semi-automatic electric arc welding is to be used for butt joints in pipes-to-pipes, for branch pieces attached to pressure pipes and for the attachment of pipe flanges. Oxy-acetylene welding may also be used, but, in general, is switchable only for butt joints in pipe not exceeding 100 mm in nominal diameter or 9.5 mm in wall thickness.

(b) Welding in pipe lines is to be done in the shop as far as practicable. Where joints are made in the installation on board ships, the piping is to be arranged in positions accessible for proper preheating, welding, heat treatment and examination of the joints.

(c) Preheating is to be employed when necessitated by dimensions and composition of materials to be welded. Carbon steel piping 12 mm thick and over is to be preheated to and held at a temperature of at least 50°C when the room temperature is below 10°C. Alloy steel piping is to be subjected to special consideration.

(d) The welding procedure proposed for the attachment of flanges, valve chests and other fittings to pipes, pipes-to-pipes and the fabrication of branch pieces, whether in carbon or alloy steel, is to be approved by the Society.

5.8.2 Stress relieving

(a) All Group-I and -II pipes and fabricated branch pieces of carbon and C-Mn steels having a wall thickness exceeding 9.5 mm, or all alloy steels except for C-Mn steels are to be stress relieved on completion of welding, or after being heated for forming or bending operation, or after being cold bent to a radius less than 3.5 times the nominal diameter measured at the centerline of the pipe.

(b) In the case of welded pipe connections requiring stress relieving, adjacent pipes or fittings are to be heated in a circumferential band at least 3 times the width of the widest of the welding groove, but not less than twice the width of the weld reinforcement. Other methods of stress relieving will be considered on submission of full details.

(c) Copper pipes are to be properly annealed before being installed on board ships, if required.

5.8.3 Non-destructive examinations

(a) Butt weld and fillet weld joints on Groups I and II piping systems are to be subjected to non-destructive examinations in accordance with the requirements given in Table XII 5-9.

Table XII 5-9
Non-destructive Examinations for Pipe Welding

Pining Group	Nominal Diameter of Pipe	Extent of Examinations	
		Butt Joints	Fillet Joints
		RT or UT	MT or PT
I	> 65 mm	Full	Full
	≤ 65 mm	Random	Random
II	> 90 mm	Random	Random
	≤ 90 mm	Not required	Not required

Where:
RT : Radiographic examination.
UT: Ultrasonic examination.
MT: Magnetic particle examination.
PT: Liquid penetrant examination.

Note: Random examination is to be at least 20% of the joints.

(b) The Society may require other particular non-destructive examinations considering welding procedures, welding materials or pipe materials.

(c) The repair of defects revealed during non-destructive examination is to be carried out according to agreement with the Surveyor. All such weld repairs are to be examined using the relevant test method.

5.9 Welding of Clad Steel Plates

5.9.1 General

These requirements specify welding of steel plates with austenitic stainless steel cladding.

5.9.2 Welding methods - deposited metal

(a) For welding of steel plates with austenitic stainless steel cladding, only electrodes approved by the Society are to be used, and welding is to be carried out only by certified welders.

(b) The welding may be carried out by means of shielded metal-arc welding, automatic or semi-automatic arc welding under inert gas and/or flux or a combination of these methods.

(c) The weld joint is to have the same resistance to corrosion as the cladding metal, and the corrosion resistant deposited metal is to have at least the same thickness as the cladding metal.

(d) The chemical composition of the weld metal in the top layer on the clad side is to correspond to the composition of the cladding metal. The cladding deposited by welding is to have at least the same thickness as the cladding on the original plate.

5.9.3 Groove preparation

(a) Proper groove shape in connection with correct welding sequence is to be employed. The edges are to be prepared as shown in Fig. XII 5-4 with a cutting tool or by grinding.

(b) Clad steel may be flame-cut provided this is done from the base plated side. It is recommended that the cutting face is removed in a depth of about 2 mm. When shearing is used, the cladding side must face upwards.

(c) If there are alignment difficulties or if the welded connection is highly stressed, an edge preparation involving the removal of the cladding, adjacent to the weld is recommended.

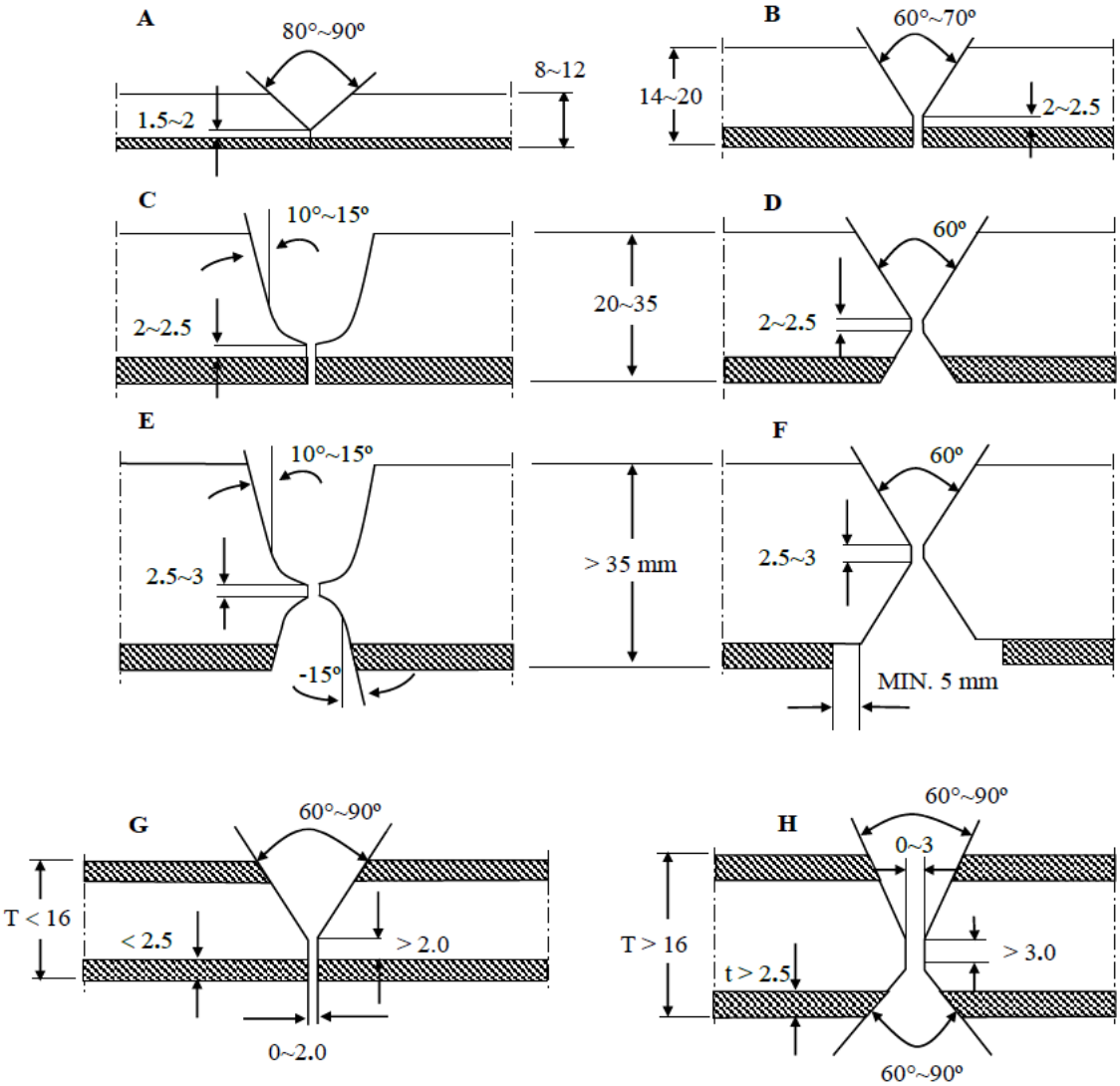

Fig. XII 5-4
Examples on Most Commonly Used Grooves

5.9.4 Welding procedure

(a) When welding clad materials, mixing of base metal and weld deposit, as well as mixing of the two types of high alloyed weld deposit is to be held at a minimum. Low welding current and small welding material dimensions are to be used. The degree of dilution is preferably to be kept below 30%. The degree of dilution is defined as the amount of base metal in the weld metal.

(b) The use of low-alloyed or non-alloyed welding materials on the cladding is not allowed.

(c) The welding sequence is to be in accordance with Fig. XII 5-5. At least two layers of the alloyed weld metal are to be deposited when welding the backing from the clad steel side, even if it is necessary to chip or grind off part of the first stainless bead to make room for the second pass. At least, the first bead is to be made with an over-alloyed welding material.

(d) The normal strength steel backing is as far as possible to be welded before the stainless cladding and is to be welded with suitable normal strength steel welding material. Care must be taken to prevent the root bead from penetrating into the cladding. Tack welds are to be of sufficient size, have full penetration and an even surface, so that they may be covered by the first weld bead without removal. For the top layer on the backing only extensively dried, extra-low hydrogen type of electrodes are to be used.

(e) When welding pipes where there is access only from the outside, the entire cross-section is to be built up by alloyed weld metal corresponding to the cladding. The sides of the groove are preferably to be covered with an over-alloyed welding material (buttering) before joining.

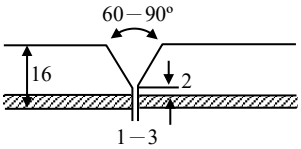

Weld groove face to be ground smooth.

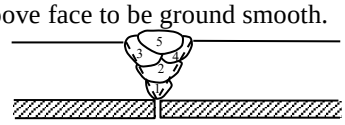

Root bead (1) of normal strength steel is not to penetrate the cladding.

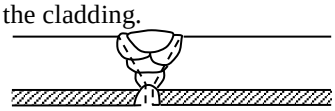

The root bead is back-gauged or ground.

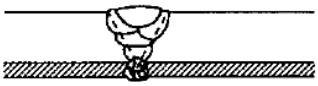

First bead on the clad side to be welded with an over-alloyed welding material, top layer to match the composition of the cladding.

Recommended types of joints

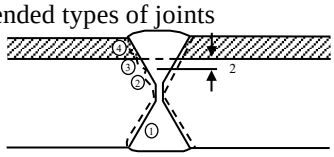

③ to be welded with an over-alloyed welding material.

④ to be welded with a welding material matching the composition of the cladding.

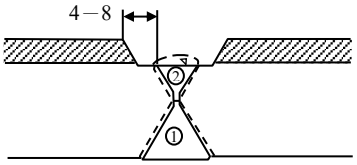

Backing to be ground back enough to give room for at least two high-alloyed layers.

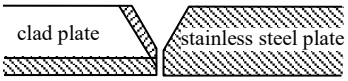

Butt weld between clad plate and stainless steel plate: The groove edge on the clad plate is buttered with an over-alloyed welding material, the joint may then be welded with a welding material matching the stainless steel.

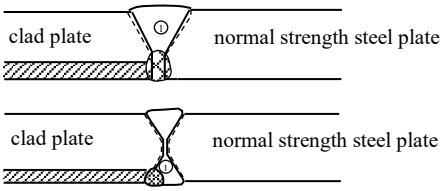

Butt weld between clad plate and normal strength steel plate: The cladding is welded with an over-alloyed type of welding material.

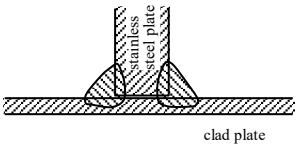

Only to be used in assemblies subjected to low stresses: Welding material to match the cladding.

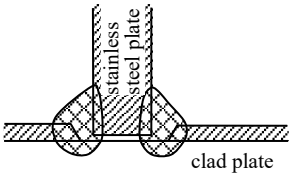

To be used in assemblies subject to high stresses: Welding material to be of over-alloyed type to compensate for the mixing with normal strength steel backing.

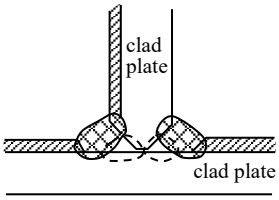

Assembly subjected to high stresses: Root beads can be welded with over-alloyed welding materials and the top layer with ordinary stainless steel welding material, or root bead is welded with normal strength steel welding material and the top layer with over-alloyed welding material.

Fig. XII 5-5
Examples on Welding Sequence

Tel: *+886 2 25062711*
Fax: *+886 2 25074722*
E-mail: *cr.tp@crclass.org*
Website: *http://www.crclass.org*
© CR – All rights reserved

財團法人驗船中心
CR CLASSIFICATION SOCIETY

RULES FOR THE CONSTRUCTION AND CLASSIFICATION OF STEEL SHIPS 2022

PART XIII – NAVIGATIONAL SAFETY SYSTEMS

July 2022

財團法人驗船中心
CR CLASSIFICATION SOCIETY

RULES FOR THE CONSTRUCTION AND CLASSIFICATION OF STEEL SHIPS 2022

PART XIII – NAVIGATIONAL SAFETY SYSTEMS

July 2022

RULES FOR THE CONSTRUCTION AND CLASSIFICATION OF STEEL SHIPS

PART I CLASSIFICATION AND SURVEY

PART II HULL CONSTRUCTION AND EQUIPMENT

PART III SPECIAL SERVICE AND TYPE OF SHIPS

PART IV MACHINERY INSTALLATIONS – CONSTRUCTION AND SHAFTING

PART V BOILERS, PRESSURE VESSELS, THERMAL OIL HEATERS AND INCINERATORS

PART VI PIPING AND PUMPING SYSTEMS

PART VII ELECTRICAL INSTALLATIONS

PART VIII AUTOMATIC OR REMOTE CONTROL AND MONITORING SYSTEMS

PART IX FIRE PROTECTION, DETECTION AND EXTINCTION

PART X REFRIGERATED CARGO INSTALLATIONS

PART XI MATERIALS

PART XII WELDING

PART XIII NAVIGATIONAL SAFETY SYSTEMS

PART XIV GOAL-BASED SHIP CONSTRUCTION STANDARDS SHIPS

PART XV HULL CONSTRUCTION AND EQUIPMENT FOR SHIPS LESS THAN 90 M IN LENGTH

List of major changes in Part XIII from 2019 edition

Acronyms

AIS	Automatic Identification System
ANTS	Automatic Navigation and Track-keeping System
ARPA	Automatic Radar Plotting Aid
BC Code	Code of Safe Practice for Solid Bulk Cargoes
BNWAS	Bridge Navigational Watch Alarm System
CA	Controlled Atmosphere
CDI	Chemical Distribution Institute
COW	Crude Oil Washing
CPA	Closest Point of Approach
CPP	Controllable Pitch Propeller
CSC	International Convention for Safe Containers
CSR	Common Structural Rules
CTOD	Crack Tip Opening Displacement
ECDIS	Electronic Chart Display and Information System
EEBD	Emergency Escape Breathing Devices
ENC	Electronic Navigational Chart
ESP	Enhance Survey Plan
ETA	Emergency Towing Arrangement
FEU	Forty-foot Equivalent Unit
FMEA	Failure Mode & Effect Analysis
FRP, GRP	Fibreglass Reinforced Plastics
FTP Code	International Code for Application of Fire Test Procedures
GBS	Goal-Based ship construction Standards
GDC	General Dry Cargo
GLONASS	Global Navigation Satellite System
GMDSS	Global Maritime Distress and Safety System
GPS	Global Positioning System
HAZ	Heat Affected Zone
HHP anchor	High Holding Power anchor
HSC	High Speed Craft
HTS	High Tensile Steel
IACS	International Association of Classification Societies
IBC Code	International Code for the Construction and Equipment of Ships Carrying Dangerous Chemicals in Bulk

ICS	The International Chamber of Shipping
IEC	International Electrotechnical Commission
IGC Code	International Code for the Construction and Equipment of Ships Carrying Liquefied Gases in Bulk
ILO	International Labour Organization
IMDG Code	International Maritime Dangerous Goods Code
IMO	International Maritime Organization
ISO	International Standards Organization
LAN	Local Area Network
LCS	Loading Computer System
LEL	Lower Explosive Limit
LRIT	Long-range Identification and Tracking of ships
MARPOL	International Convention for the Prevention of Pollution from Ships
MARVS	Maximum Allowable Relief Valve Setting
MEPC	Marine Environment Protection Committee
MLC	Maritime Labour Convention
MSC	Maritime Safety Committee
NDT	Nondestructive Testing
OCIMF	The Oil Companies International Marine Forum
OOW	Officer Of the Watch
PA	Public Address
PMA	Permanent Means of Access
PMS	Planned Machinery Maintenance Scheme
RH	Relative Humidity
PSPC	Performance Standard for Protective Coating
SENC	System Electronic Navigational Chart
SHHP anchor	Super High Holding Power anchor
SOLAS	International Convention for the Safety of Life at Sea
SRE	Ship Recycling
STCW	International Convention on Standards of Training, Certification and Watch-keeping for Seafarers
STS operation	Ship-To-Ship operation
S-VDR	Simplified Voyage Data Recorder
TCPA	Time to CPA
TEU	Twenty-foot Equivalent Unit
THD	Total Harmonic Distortion

TMCP	Thermo-Mechanical Controlled Processing
UPS	Uninterruptible Power Supply
VDR	Voyage Data Recorder
VEC	Vapor Emission Control

RULES FOR THE CONSTRUCTION AND CLASSIFICATION OF STEEL SHIPS

PART XIII
NAVIGATIONAL SAFETY SYSTEMS

CONTENTS

Chapter 1 General 1

1.1 The Classification Concept 1
1.2 Scope of Classification and Rule Requirements 2
1.3 Definitions 3
1.4 Class Notations 6
1.5 Documentation to be Submitted for Approval 7
1.6 Documentation to be Submitted for Information 9
1.7 Functional Tests 9

Chapter 2 Design of Workplace 10

2.1 General 10
2.2 Workstations for Primary Bridge Functions 11
2.3 Additional Workstations 12
2.4 Communication between Workstations 13
2.5 Passageways and Clear Deckhead Height 13
2.6 Bridge Configuration 14
2.7 Console Configuration 15
2.8 Instrument Location 15
2.9 Design Requirements for Class Notation NAV0 17
2.10 Design Requirements for Class Notation NAV1 17

Chapter 3 Bridge Working Environment 19

3.1 Requirements for Bridge Working Environment 19

Chapter 4 Equipment Carriage Requirements 21

4.1 General 21
4.2 Equipment Carriage Requirements for Class Notation NAV0 21
4.3 Additional Equipment Carriage Requirements for Class Notation NAV1 22

Chapter 5 General Bridge Equipment Requirements 24

5.1 General 24
5.2 Environmental Condition 24
5.3 Location and Installation of Equipment 24
5.4 Electrical Power Supply, Alarms, Performance Confirmation and Failure Protection 25

5.5 Computer-based Systems and Software Quality 26

Chapter 6 Specific Requirements for Different Types of Bridge Equipment 28

6.1 General 28
6.2 Course Information Systems 28
6.3 Steering Systems 28
6.4 Speed Measuring Systems 28
6.5 Depth Measuring Systems 28
6.6 Radar Systems 29
6.7 Traffic Surveillance Systems 29
6.8 Position-fixing Systems 29
6.9 Watch Monitoring and Alarm Transfer Systems 30
6.10 Internal Communication Systems 31
6.11 Nautical Communication Systems 32
6.12 Sound Reception System 33
6.13 Electronic Chart Display and Information System (ECDIS) 33
6.14 Automatic Navigation and Track- keeping System (ANTS) 33
6.15 Conning Information Display 34
6.16 Bridge Navigational Watch Alarm System (BNWAS) 34
6.17 Central Alarm Panel 36

Chapter 7 Man/Machine Interface 38

7.1 General Requirements 38
7.2 Instrument Location and Design 38
7.3 Illumination and Individual Lighting of Instruments 39
7.4 Requirements for the Man/Machine- Dialogue of Computer Based Systems 39

Chapter 8 Ship Manoeuvring Information 40

8.1 General 40
8.2 Provision of Manoeuvring Information 41
8.3 Presentation of Manoeuvring Information 42

Chapter 9 Qualifications and Operational Procedures 43

9.1 General 43
9.2 Qualifications 44
9.3 Bridge Procedures 44
9.4 Operational Safety Standard 45

Chapter 10 Bridge Equipment Tests 47

10.1 General 47
10.2 On-board Testing of Bridge Equipment 47

Chapter 1
General

1.1 The Classification Concept

1.1.1 General

The text in paragraph 1.1 describes the concept with regard to objectives and safety philosophy on which the Rules for Navigational Safety Systems are based. Consequently, the contents of this paragraph are not to be understood as rule requirements.

1.1.2 Objectives of the Rules for Navigational Safety Systems

(a) The main objectives of the Rules for Navigational Safety Systems are to reduce the risk of failures in bridge operation causing collisions, groundings and heavy weather damages and to minimize the consequences to ship and complement should an accident occur.

(b) The Rules for Navigational Safety Systems aim at setting forth requirements to regulate shipboard factors affecting safety and efficiency in bridge operations and, in this context, at:

(i) Including relevant requirements and recommendations established by the International Maritime Organization (IMO).

(ii) Including relevant international standards and specific requirements issued by governmental maritime authorities within the subjects of the Rules or indicating the points in which they differ.

1.1.3 Safety philosophy

(a) In order to achieve optimum safety and efficiency in bridge operation, the Rules for Navigational Safety Systems address the "total bridge system". The total bridge system is considered to comprise four essential parts:

(i) The "technical system", which is to deduce and present information as well as enable the proper setting of course and speed.

(ii) The "human operator", who is to evaluate available information, decide on the actions to be taken and execute the decisions.

(iii) The "man/machine interface", which is to safeguard that the technical system is designed with due regard to human abilities.

(iv) The "procedures", which are to ensure that the total bridge system performs satisfactorily under different operating conditions.

(b) The "main elements" of the various parts of the bridge system are considered to comprise:

(i) Qualifications, capacity and quality of the human operator in relation to the functions to be carried out.

(ii) Specification, automation level and condition of the technical system in relation to information needs, workloads and reliability.

(iii) Physical abilities and information processing capacity of the human operator in relation to working conditions and the technical systems he is to operate.

(iv) Tasks to be performed and technical aids available under various operating conditions as basis for establishing working routines and operating procedures.

(c) With the exception of "operator quality", the elements mentioned in (b) form the basis for the Rules for Navigational Safety Systems set forth. It is believed that improvements within these elements can also have a positive effect on operator quality (personality, responsibility) which in the context of classification is considered to be a matter of selection of personnel.

1.2 Scope of Classification and Rule Requirements

1.2.1 General

(a) Classification of bridge systems verifies in compliance with the rules developed for the safe performance of bridge functions. The classification concept involves affirmation through a set of voluntary class notations that given rules, requirements, specifications and so forth have been fulfilled for bridge design, instrumentation, components and procedures.

(b) The rule requirements are established to regulate the factors affecting the safe performance of any part of the bridge system and to ensure a consistent level of system reliability in various modes of operation under different operating conditions.

(c) The Rules for Navigational Safety Systems take into consideration that the modes of operation will vary in accordance with the condition of internal technical systems and the availability of relevant external systems, and that operating conditions can be influenced by the waters to be navigated, traffic and weather conditions.

1.2.2 Scope of Classification

(a) Safe performance of the bridge system is qualified by its ability to determine, execute and maintain the right course and speed of the ship in relation to the waters, that traffic and the weather. This ability is threatened by:
   (i) Internal bridge system failure.
   (ii) Loss of manoeuvrability (steering/propulsion).
   (iii) Loss of external information.

(b) The main concern of the Rules for Navigational Safety Systems is to prevent internal bridge system failures and, in this context, to address all parts of the system as defined in 1.1.3(a).

(c) The required reliability of propulsion and steering systems for preventing loss of manoeuvrability is addressed by the mandatory classification rules. The concern of the Rules of Navigational Safety Systems in this context is to safeguard that:
   (i) The implications of failure in propulsion and steering systems are taken into consideration in the design of the bridge system, and that system degradation is brought to the attention of the watch officer by relevant warnings.
   (ii) The emergency steering system in the steering gear compartment is properly arranged for safe and efficient operation.

(d) With regard to loss of external information, the concern of the Rules for Navigational Safety Systems is to safeguard that:
   (i) The ship borne part of an external navigation or communication system detects loss of information caused by failure in the external system.

(e) The technical reliability of any system to be operated from the bridge serving functions additional to those related to the safe navigation of the ship, such as machinery systems, cargo and ballasting systems, safety monitoring systems, etc., is addressed in other Parts of the Rules. The concern of the Rules for Navigational Safety Systems in this context is:
   (i) The location of workstations for additional bridge functions.
   (ii) The working conditions for performance of additional functions if they are the responsibility of the officer of the watch.
   (iii) The man/machine interface of a technical system serving additional bridge functions if the system is to be operated by the officer of the watch.
   (iv) The integration of any system included in a local network for performance of main bridge functions.

1.2.3 Scope of Rule requirements

The requirements set forth in each of the chapters of the Rules for Navigational Safety Systems reflect different sets of factors affecting the performance of the total bridge system and are intended to regulate the following areas:

(a) "Design of workplace", based on analysis of functions to be performed under various operating conditions and the technical aids to be installed.

(b) "Bridge working environment", based on factors affecting the performance of human operators.

(c) "Range of instrumentation", based on information needs and efficient performance of navigational tasks.

(d) "Equipment reliability" applicable to all types of bridge equipment, based on common requirements to ensure their suitability under various environmental conditions.

(e) "Specific requirements" to different types of bridge equipment, based on the facilities required for the performance of their specific functions.

(f) "Man/machine interface", based on the analysis of human limitations and compliance with ergonomic principles.

(g) "Qualifications", based on the competence required for mastering rational navigational methods and relevant technical systems installed on board the ship.

(h) "Operating procedures", based on the work organization needed to make the bridge system function under different operating conditions.

(i) Information on the ship's manoeuvring "characteristics", based on the manoeuvre commonly used in various operational situations.

(j) "Tests and trials" for new ships, based on the need to ensure that technical systems perform in accordance with their specifications before being relied upon and used in practical operation.

(k) "Reporting system" from ships in service on bridge instrument failures, based on the information needed to detect their factual reliability level.

(l) "Survey schemes" for ships in service, based on the follow-up and testing required to safeguard that bridge systems maintain their reliability.

1.2.4 Structure of the Rules for Navigational Safety Systems

(a) The Rules for Navigational Safety Systems are structured to establish functional requirements to the greatest possible extent, and to give guidance as to how functional requirements can be met by technical solutions or other remedies that safeguard the performance of the function.

(b) A functional requirements is as far as possible expressed without entering into quantification. The functional requirements have a principle status and will only be adjusted if the functions to be carried out on the bridge are altered.

1.3 Definitions

1.3.1 Bridge system: The total system for the performance of bridge functions, comprising bridge personnel, technical systems, man/machine interface and procedures.

1.3.2 Bridge: The area from which the navigation and control of the ship are exercised, comprising the wheelhouse and the bridge wings.

1.3.3 Wheelhouse: Enclosed area of the bridge.

1.3.4 Bridge wing: The part of the bridge on each side of the wheelhouse which extends to the ship's side.

1.3.5 Catwalk: Arrangement outside the wheelhouse allowing a person safe access to windows along the front bulkhead(s).

1.3.6 Superstructure: Decked structure, not including funnels, which is on or above the freeboard deck.

1.3.7 Primary bridge functions: Functions related to determination, execution and maintenance of safe course, speed and position of the ship in relation to the waters, traffic and weather conditions. Such functions are:

(a) Route planning functions.

(b) Navigation functions.

(c) Collision avoidance functions.

(d) Manoeuvring functions.

(e) Docking functions.

(f) Monitoring of internal safety systems.

(g) External and internal communication related to safety in bridge operation and distress situations.

1.3.8 Additional bridge functions: Functions performed on the bridge while the ship is under way, but not related to primary bridge functions. Examples of such functions are:

(a) General communication functions.

(b) Cargo monitoring and planning functions.

(c) Extended monitoring and control of machinery.

(d) Monitoring and control of domestic systems.

1.3.9 Workstation: Position at which one or several tasks constituting a particular activity are carried out.

1.3.10 Conning position: Place on the bridge with a commanding view, providing the necessary information and equipment for a conning officer (pilot) to carry out his functions.

1.3.11 Conning information display: A display which clearly presents the state and/or value of all sensor inputs relevant to navigation and manoeuvring as well as all corresponding orders to steering and propulsion systems.

1.3.12 Commanding view: View without obstructions which could interfere with the navigator's ability to perform his immediate tasks.

1.3.13 Field of vision: Angular size of a scene that can be observed from a position on the ship's bridge.

1.3.14 Navigation: Determination of position and course of the ship; execution of course alterations.

1.3.15 Monitoring: Act of constantly checking information from instrument displays and environment in order to detect any irregularities.

1.3.16 Route planning: Pre-determination of course and speed in relation to the waters to be navigated.

1.3.17 Route monitoring: Continuous surveillance of the ship's sailing (position and course) in relation to a pre-planned route and the waters.

1.3.18 Collision avoidance functions: Detection and plotting of other ships and moving objects; determination and execution of course and speed deviations to avoid collision.

1.3.19 Manoeuvring: Operation of steering systems and propulsion machinery as required to move the ship into predetermined directions, positions or tracks.

1.3.20 Docking: Manoeuvring the ship alongside a berth and controlling the mooring operations.

1.3.21 Display: Means by which a device presents visual information to the navigator.

1.3.22 Screen: A device used for presenting visual information based on one or several displays.

1.3.23 Electronic chart display and information system (ECDIS): means a navigation information system which, with adequate back-up arrangements, can be accepted as complying with the up-to-date chart required by Regulation V/19 of the 1974 SOLAS Convention, and be accepted as meeting the chart carriage requirements of SOLAS Chapter V, as amended by Res. MSC.282(86), by displaying selected information from a system electronic nautical chart (SENC).

1.3.24 Electronic navigational chart (ENC): means the database, standardized as to content, structure and format, issued for use with ECDIS on the authority of government-authorized hydrographic offices. The ENC contains all the chart information necessary for safe navigation, and may contain supplementary information in addition to that contained in the paper chart (e.g. sailing directions) which may be considered necessary for safe navigation.

1.3.25 System electronic navigational chart (SENC): means a database resulting from the transformation of the ENC by ECDIS for appropriate use, updates to the ENC by appropriate means, and other data added by the mariner. It is this database that is actually accessed by ECDIS for the display generation and other navigational functions, and is the equivalent to an up-to-date paper chart. The SENC may also contain information from other sources.

1.3.26 Ergonomics: Application of the human factors implication in the analysis and design of the workplace and equipment.

1.3.27 Officer of the watch: Person responsible for the safety of navigation and bridge operations until relieved by another qualified officer.

1.3.28 Helmsman: Person who steers the ship under way.

1.3.29 Ocean area: Waters that encompass navigation beyond the outer limits of coastal waters. Ocean areas do not restrict the freedom of course setting in any direction for a distance equivalent to 30 minutes of sailing with the relevant ship speed.

1.3.30 Coastal waters: Waters that encompass navigation along a coast at a distance less than the equivalence of 30 minutes of sailing with the relevant ship speed. The other side of the course line allows freedom of course setting in any direction for a distance equivalent to at least 30 minutes of sailing with the relevant speed.

1.3.31 Narrow waters: Waters that do not allow the freedom of course setting to any side of the course line for a distance equivalent to 30 minutes of sailing with the relevant ship speed.

1.3.32 Normal operating conditions: When all shipboard systems and equipment related to primary bridge functions operate within design limits and external conditions, i.e. weather and traffic, or the malfunction of position-fixing systems, do not cause excessive operator workloads.

1.3.33 Irregular operating conditions: When external conditions cause excessive operator workloads.

1.3.34 Abnormal operating conditions: When internal technical system failures require operation of back-up systems on the bridge or when they occur during an irregular operating condition, or when the officer of the watch becomes unfit to perform his duties and has not yet been replaced by another qualified officer.

1.4 Class Notations

1.4.1 General

(a) In order to offer classification to meet the individual needs of ship owners, the Rules for Navigational Safety Systems are divided into three Class Notations. Two Class Notations represent minimum requirements within bridge design, instrumentation and procedures, where **NAV** covers basic bridge design and **NAV0**, in addition, includes instrumentation and bridge procedures.

(b) The third Class Notation **NAV1** extends the basic requirements for bridge design and instrumentation and, in addition, required information on the manoeuvring characteristics of the ship and an operational safety manual for safe watch-keeping and command of the ship.

1.4.2 Contents of Class Notations and extensions

(a) **NAV** covers bridge design, comprising the following main areas:
- (i) Mandatory and additional workstations.
- (ii) Field of vision from workstations.
- (iii) Location of instruments and equipment.
- (iv) Bridge working environment.
- (v) Range of instrumentation.
- (vi) Instrument and system performance, functionality and reliability.
- (vii) Alarm management, including watch monitoring and alarm transfer system.

(b) **NAV0** covers bridge design, instrumentation and bridge procedures, comprising the following main areas:
- (i) **NAV**.
- (ii) Range of instrumentation.
- (iii) Instrument and system performance, functionality and reliability.
- (iv) Equipment installation.
- (v) Monitoring and alarm transfer system.
- (vi) Procedures for single-man watch-keeping.
- (vii) Bridge navigation watch alarm system.

(c) **NAV1** covers:
- (i) **NAV0**.
- (ii) Extensions within the following areas of **NAV0**:
  - (1) Design of one-man workstation.
  - (2) Field of vision astern.
  - (3) Range of instrumentation.
  - (4) Instrument performance.
  - (5) Automation level.
  - (6) Qualifications.
- (iii) Information on the manoeuvring characteristics of the ship comprising the following main items:
  - (1) Speed at different settings.
  - (2) Steering ability.
  - (3) Turning ability.
  - (4) Stopping ability.
- (iv) Operational safety manual comprising the following main items:
  - (1) Bridge organization and responsibilities.
  - (2) Watch-keeping procedures.

(3) System fall-back procedures.

(4) Accident and emergency procedures.

1.4.3 Documentation of compliance

(a) The Class Notations **NAV**, **NAV0** and **NAV1** imply that the ship is built and equipped in compliance with the relevant parts of Rules for Navigational Safety Systems.

(b) Ships satisfying the requirements for Class Notation **NAV** will have the following text entered in the Appendix to the Classification Certificate:

The Class Notation denotes that the bridge arrangement has been based on relevant functional requirements and designed in accordance with established principles of ergonomics for reduced workload and improved operational conditions.

(c) Ships satisfying the requirements for Class Notation **NAV0** will have the following text entered in the Appendix to the Classification Certificate in addition to the text for **NAV**:

The notation also denotes that the ship complies with a certain standard regarding range of instrumentation, reliability and performance, and that IMO's Circ. 566 Provisional guidelines in the conduct of trials in which the officer of the navigation watch acts as the sole look-out in periods of darkness.

(d) Ship satisfying the requirements for Class Notation **NAV1** will have the following text entered in the Appendix to the Classification Certificate in addition to the text for **NAV0**:

Furthermore, the bridge is equipped with an automatic navigation and track-keeping system, incorporating grounding avoidance functions and facilitating one-man bridge operation from pilot station to pilot station under normal operating conditions. In addition, the Notation denotes that the ship has extensive documentation of its manoeuvring characteristics and is provided with an operational safety manual describing procedures for normal and abnormal operating conditions and emergency situations.

1.4.4 Class assignment

(a) The ship will be assigned Class Notation **NAV** when the relevant requirements given in Chapter 2 and 3 are complied with.

(b) The ship will be assigned Class Notation **NAV0** when the relevant requirements given in Chapter 2 to 7 are complied with.

(c) The ship will be assigned Class Notation **NAV1** when the relevant requirements given in Chapter 2 to 8 are complied with.

(d) Before the ship can operate with single-man watch keeping, the relevant requirements in Chapter 9 are to be complied with.

(e) The text in (d) will be entered in the Appendix to the Classification Certificate if the relevant requirements in Chapter 9 are not complied with at the delivery of the ship.

1.5 Documentation to be Submitted for Approval

1.5.1 Class Notation **NAV**

Bridge design and the layout and location of instruments and equipment are to be documented. Specifically, the drawings are to show:

(a) Bridge configuration and dimensions, including inclination and dimensions of windows and the shape and size of divisions between windows.

(b) Bridge layout, including the configuration and location of workstations and location of toilet.

(c) Horizontal and vertical fields of vision from the various workstations (in light draught condition).

(d) Blind sectors caused by divisions between windows and obstructions outside the wheelhouse within the required field of vision from the various workstations.

(e) Configuration of consoles.

(f) Location of instruments and equipment in consoles and elsewhere on the bridge.

(g) Location of equipment not located on the bridge if related to primary bridge functions.

(h) Details such as configuration of bridge wings and height of front bulwark with windscreens, entrances, type of doors to wheelhouse and flooring in wheelhouse.

1.5.2 Class Notation **NAV0**

(a) Documentation as required for Class Notation **NAV**.

(b) A list of all navigational and manoeuvring equipment with identification of manufacturer, type, model and type approval is to be submitted.

(c) All information on design and performance relevant to documenting compliance with the Rules for Navigational Safety Systems is to be submitted for each type of equipment of the categories specified in Chapter 6 intended to the installed on the ship.

(d) The following documentation is to be submitted to verify compliance with arrangements for preventing accidents caused by sudden operator disability:
   (i) Drawings and descriptions for the monitoring and alarm transfer system.
   (ii) Procedures for single-man watch-keeping.

(e) For ships not built to Class Notation **CAU**, drawings and descriptions are to specify:
   (i) Electric power supply.
   (ii) Monitoring of electric power generating plant.

(f) A test program specifying detailed test procedures for primary bridge instruments in compliance with the requirements for on-board testing set forth in Chapter 10 is to be submitted for approval.

(g) The consequences of failures in an integrated navigational system in relation to its functional objectives are to be documented.

1.5.3 Class Notation **NAV1**

(a) Documentation is to be submitted as required for Class Notation **NAV0**.

(b) A detailed program for test and trials of the automatic navigation and track-keeping system, which includes sailing along a planned route, is to be submitted.

(c) A test program for manoeuvring trials is to be submitted.

(d) A manoeuvring booklet containing the methods and results of manoeuvring trials is to be submitted for documenting the manoeuvring characteristics of the ship.

(e) An operational safety manual with procedures for normal and abnormal operating conditions and in emergency is to be submitted.

1.6 Documentation to be Submitted for Information

1.6.1 Class Notation **NAV0** and **NAV1**

(a) Operating/technical manuals for the equipment serving primary bridge functions are to be submitted for information.

(b) Drawings showing the antenna arrangement for satellite communication systems, radars, VHF equipment and other antenna arrangements, are to be provided for the purpose of evaluating the transmitting/receiving conditions and interference aspects for bridge systems and equipment.

(c) A general arrangement drawing showing the bridge configuration and its location, superstructures and funnel(s) on the ship are to be submitted for information.

1.7 Functional Tests

1.7.1 Class Notation **NAV0**

(a) Tests which give evidence of the satisfactory operation of instruments and integrated navigation systems in accordance with the Rules are to be carried out. Failure modes are to be tested as realistically as possible.

1.7.2 Class Notation **NAV1**

(a) Tests required for Class Notation **NAV0** are to be carried out.

(b) Tests in accordance with an approved test program to give evidence of the functioning of the automatic navigation and track-keeping system are to be carried out.

(c) Tests required to establish information on the ship's manoeuvring characteristics as specified in Chapter 8 are to be carried out.

Chapter 2
Design of Workplace

2.1 General

2.1.1 Application

(a) Ships requesting Class Notation **NAV** are to comply with the requirements in 2.1 to 2.8.

(b) Ships requesting Class Notation **NAV0** are to comply with the requirements in 2.1 to 2.9.

(c) Ships requesting Class Notation **NAV1** are to comply with the requirements in 2.1 to 2.10.

2.1.2 General requirements

(a) The bridge design is to enable the officer of the watch to perform navigational duties unassisted at all times during normal operating conditions. He is to be able to maintain a proper look-out by sight and hearing as well as by all available means appropriate in the prevailing circumstances and conditions so as to make full appraisal of the situation and the risk of collision, grounding and other hazards to navigation.

(b) The safe control and command of the ship while under way are to be allocated to a certain area of the bridge where only instruments, equipment and controls necessary for the performance of primary bridge functions are to be located.

(c) From the area allocated safe control and command of the ship while under way, the navigator is to have easy access to additional information for monitoring the safety state of the ship.

(d) Workstations for the safe and efficient performance of primary bridge functions under normal and abnormal operating conditions in the various phases of the voyage from port to port are to be provided. Such workstations are to include:
   (i) Workstation for navigation.
   (ii) Workstation for traffic surveillance/manoeuvring.
   (iii) Workstation for route planning.
   (iv) Workstations for manual steering.
   (v) Workstation for safety operations.
   (vi) Workstations for docking operations.
   (vii) Workstations for conning.

(e) Workstations for additional functions may be located on the bridge provided the performance of such functions does not interfere with the tasks of maintaining safe control of the ship. Workstations for additional functions may include:
   (i) Workstation for extended communication functions.
   (ii) Workstation for monitoring/control of ballasting and cargo operation.
   (iii) Workstation for extended monitoring of machinery.
   (iv) Workstation for remote control of mooring winches, windlass, accommodation ladder, hatches and side ports.
   (v) Miscellaneous.

(f) The various workstations are to provide the field of vision specified in 2.6 and be equipped for the safe performance of the relevant tasks in accordance with the requirements set forth in 2.8.

2.2 Workstations for Primary Bridge Functions

2.2.1 General

(a) The individual workstations allocated primary bridge functions are to be designed for easy control by one person and located to allow close cooperation between the various workstations when manned for individual operations, as well as provide sufficient room for unobstructed passage between different workstation areas.

(b) The design and location of workstations are to enable the ship to be navigated and manoeuvred safely and efficiently by one navigator in ocean areas and coastal waters, as well as by two navigators in close cooperation when the workload exceeds the capacity of one person, and when under pilot age.

2.2.2 Workstations for navigation and traffic surveillance/manoeuvring

The workstations for navigation and traffic surveillance/manoeuvring and the sitting of instruments pertinent to these stations are to be sufficiently close together to enable a single navigator to carry out all functions and retrieve all necessary information from one working position, without however being restricted to a specific location.

2.2.3 Workstations for conning

(a) Workstations for conning of the ship are to be arranged to enable two extra navigators (pilots) to assist in navigating and manoeuvring the ship in pilot age waters without interfering with the tasks of the bridge personnel.

(b) A main workstation for conning is to enable a pilot to observe all relevant external and internal information for determination and maintenance of safe course and speed of the ship in narrow waters, harbour areas and during canal passages.

(c) If the view in the center line is obstructed by large masts, cranes, etc., an additional conning position providing a commanding view is to be located on the starboard side as close to the centre line as possible, but no more than 5 m from the centre line.

(d) The workstation for conning is to be located sufficiently close to:

(i) The forward centre window in order to optimize the view of the sea surface close to the sides of the ship.

(ii) The workstation for navigation and traffic surveillance and manoeuvring to allow good cooperation between the navigators, each at their workstation.

2.2.4 Workstation for route planning

(a) The workstation for route planning is to enable the navigator to plan the intended voyage without interfering with the actual navigation or manoeuvring of the ship.

(b) The workstation for route planning is to be spacious enough to facilitate the use of two charts concurrently, and adequately equipped for efficient route planning.

2.2.5 Workstations for manual steering

(a) The main workstation for manual steering is to enable a helmsman to execute and maintain course orders, both by compass readings and external visual means.

(b) The main workstation for manual steering is to preferably be located on the ship's centreline. If the workstation is located off the centre line, special steering references for use by day and by night are to be provided, e.g. sighting marks forward.

(c) A back-up workstation for manual steering in case of bridge steering system failure is to be provided in the steering gear compartment, enabling the operator to execute wheel-over orders and maintain the course in accordance with orders received from the bridge.

2.2.6 Workstation for safety operations

(a) The workstation for safety operations is to enable monitoring of the safety state of the ship as well as planning and management of emergency operations, and is to incorporate facilities for storage and use of relevant drawings and safety plans and be equipped for internal communication.

(b) The location and configuration of the workstation for safety operations and its instrumentation are to:

(i) enable a single person to carry out the relevant functions at the workstation without interfering with the tasks to be performed at the workstation for traffic surveillance/manoeuvring;

(ii) enable a person at the workstation to observe the workstation for traffic surveillance/manoeuvring and maintain the field of vision for proper look-out; and

(iii) enable the navigator at the workstation for traffic surveillance/manoeuvring to observe information related to the safety state of the ship which are not located at the traffic surveillance workstation.

2.2.7 Workstations for docking operations

The workstations for safe docking of the ship are to enable the navigator together with a pilot to observe all relevant external and internal information and control the manoeuvring of the ship.

2.3 Additional Workstations

2.3.1 General

(a) In order to maintain the safety level in bridge operation, also when other functions than those related to primary bridge functions are performed by the officer of the watch, the following requirements are to be met:

(i) Each additional function is to be designated a separate workstation (separate workstation may be adjacent).

(ii) From workstations for additional functions, it is to be possible to monitor the workstation for traffic surveillance / manoeuvring, including the ship's course and rudder angle, and to maintain the field of vision for efficient look-out.

(iii) The workload at workstations for additional functions is not to prevent the officer of the watch from maintaining a proper look-out.

(iv) In situations where primary functions may require the immediate attention of the officer of the watch, nothing is to prevent him abandoning a workstation for additional functions.

(v) It is to be possible to operate workstations for additional functions without interfering with the operation of workstations for primary functions.

(b) Other functions than those related to navigation and manoeuvring may be performed on the bridge by other personnel than the officer of the watch, provided the following requirements can be met:

(i) The location or the configuration of a workstation for other functions is not to influence the performance of primary bridge functions.

(ii) The tasks to be carried out at workstations for other functions are not in any way to affect the performance of primary bridge functions, neither by use of light, noise disturbance nor visual distraction.

2.3.2 Workstation for communications

(a) Where other internal or external communications equipment than that related to navigation is installed on the bridge, it is to be sited and used in such a manner so as not to interfere with the ship's navigation. Such equipment, which may be for distress and safety communications or for general communications, in referred to as "additional communications equipment".

(b) Additional communications equipment to be installed on the bridge is to be located in a communications workstation. Those parts of such communications equipment not fitted with operating controls and read-out facilities and which, by reason of their size or for other practical considerations, cannot be mounted in this workstation, may be mounted outside the bridge area. Equipment for distress and safety communications is to be installed in accordance with the requirements of the International Convention for the Safety of Life at Sea, 1974 (SOLAS 1974).

(c) It is to be possible for a navigator to operate the additional communications equipment located on the bridge simply and efficiently.

(d) Communications equipment on the bridge is to be so arranged that whenever the situation does not permit the navigator to operate the additional communications equipment, he is to be relieved of this task.

(e) It is to be possible to perform radio-telephone public correspondence communications without these communications being audible to the navigator.

(f) Equipment on the bridge for reception of written communications (e.g. telex, telefax) is to have the means to prevent unauthorized access to incoming communications.

(g) Where the noise level produced by a piece of communications equipment to be located on the bridge exceeds the requirements of IMO Resolution A.468 (XII), special sound-reducing measures are to be taken so that the resulting noise level on the bridge fulfills the relevant requirements of this resolution.

2.4 Communication between Workstations

2.4.1 General

Under all operating conditions, it is to be possible for persons at a workstation to communicate with persons at other workstations of relevance for the function to be performed.

2.5 Passageways and Clear Deckhead Height

2.5.1 General

(a) There are to be a clear route across the wheelhouse from bridge wing to bridge wing for two persons to pass each other. The width of the passageway is to be 1200 mm and not less than 700 mm at any single point of obstruction.

(b) There are to be no obstructions between the points of entry to the bridge from lower decks and the clear route referred to above. This passageway is to be at least 700 mm wide.

(c) The distance between separate workstation areas is to be sufficient to allow unobstructed passage for persons not working at the stations. The width of such passageways is not to be less than 700 mm including persons sitting or standing at their workstations.

(d) The distance from the bridge front bulkhead, or from any console and installation placed against the front bulkhead to any console or installation placed away from the bridge front, is to be sufficient for one person to pass a stationary person. The width of this passageway is not to be less than 800 mm.

(e) The clear deckhead height in the wheelhouse is to take into account the installation of overhead panels and instruments as well as the height of door openings required for easy entrance of the wheel house. The following clear heights for unobstructed passage are to be provided:

(i) The lower edge of deck head-mounted equipment in open areas and passageways, as well as the upper edge of door openings to bridge wing sand other open deck areas is to be at least 2100mm above the deck.

(ii) The lower edge of entrances and doors to the wheelhouse from adjacent passageways is not to be less than 2000 mm.

(f) It is to be possible to secure bridge wing doors in the open position, and it is to be possible to open doors with one hand. Ships with fully enclosed bridge wings are at least to have one door, providing direct access to the adjacent area outside the wheelhouse.

2.6 Bridge Configuration

2.6.1 General

(a) When designing the configuration of the bridge, the main factors to be considered are the overall view required from the inside of the bridge and the field of vision required form each workstation.

(b) The view through windows is not to be obstructed by glare caused by internal light sources.

2.6.2 Field of vision

(a) In order to obtain sufficient field of vision for safe navigation and manoeuvring of the ship, every effort is to be made to place the bridge above all other decked superstructures.

(b) It is to be possible to watch the area immediately in front of the bridge superstructure from the inside of the wheelhouse.

(c) The ship's side is always to be visible from the workstation for docking operations, especially where tugs or pilot boats come alongside and where the ship touches the jetty.

(d) It is to be possible to observe all objects of interest for the navigation, such as ships and lighthouses, in any direction from inside the wheelhouse.

(e) The vertical view from the workstations for navigation and traffic surveillance/manoeuvring is to enable the navigator to detect and monitor objects visually on the sea surface up to the horizon within the required horizontal field of vision when the ship is pitching and rolling.

(f) In order to observe small objects of interest for navigation and to be able to perform manoeuvre timely to avoid critical situations, the operator at the workstations for navigation and traffic surveillance/ manoeuvring is to have optimum view of the sea surface close to the ship seen from a sitting position.

(g) The forward view over the lower edge of the windows and the general view through other windows seen from a sitting position at the workstations for navigation and traffic surveillance/manoeuvring are not to be obstructed by the height of consoles located between the operator and the windows.

(h) At the workstations for navigation and traffic surveillance/ manoeuvring, the field of vision is to enable the navigator to comply with IMO's International Regulations for Preventing Collisions at Sea.

(i) From any conning position, the horizontal field of vision is to enable the conning officer to keep proper look-out in compliance with IMO's International Regulations for Preventing Collisions at Sea.

(j) From the main conning positions, the vertical field of vision is to enable the conning officer to determine the ship's exact heading and position relative to a narrow channel ahead as well as observe the relative nearness of the two sides of the channel.

(k) At the workstations for docking operations, the field of vision is to enable the operator to manoeuvre the ship safely alongside a berth and control the mooring of the ship.

(l) At the workstation for manual steering, the field of vision is to enable the helmsman to steer the ship safely in narrow channels.

(m) At a workstation for performance of additional bridge functions, the field of vision is to enable the officer of the watch to maintain a proper look-out.

2.6.3 Blind sectors

(a) Blind sectors caused by cargo, cargo gear, divisions between windows and other obstructions are to be as few and as small as possible, and in no way hamper a safe look-out from the workstations for navigation and traffic surveillance/manoeuvring.

(b) Divisions between windows are to be kept to a minimum and not placed in front of any workstation. If stiffeners between windows are to be covered, this is not to cause further obstruction of the field of vision from any position inside the wheelhouse.

2.6.4 Clear view through windows

A clear view through bridge windows is to be provided at all times regardless of weather conditions.

2.6.5 Sound signal reception

Sound signals that are audible on open deck are also to be audible inside the wheelhouse.

2.7 Console Configuration

2.7.1 General

(a) The console configuration is to enable the navigator to use all instruments and controls necessary for navigating and manoeuvring, both in a standing and a sitting position.

(b) The front chart table is to be large enough to accommodate all nautical chart sizes in common use internationally, and appropriate lighting of the chart is not to cause glare in bridge windows.

2.8 Instrument Location

2.8.1 General

Bridge equipment is to be located in workstations enabling the navigator to take into consideration pertinent information and execute actions in accordance with the functions to be performed.

2.8.2 Workstation for traffic surveillance/manoeuvring

(a) The workstation for traffic surveillance/manoeuvring is to enable the following tasks to be performed:

(i) Monitor the traffic by sight and hearing.

(ii) Analyze the traffic situation.

(iii) Decide on collision avoidance manoeuvre.

(iv) Alter course.

(v) Change speed.

(vi) Carry out a change of operational-steering mode.

(vii) Effect internal and external communications related to manoeuvring.

(viii) Operate docking aid systems

(ix) Monitor time, course, speed, track, propeller revolutions, thrust indicator (if equipped with thrusters), pitch indicator (if equipped with pitch propeller), rudder order, rudder angle and rate of turn.

(x) Monitor all alarm conditions on the bridge.

(b) Instruments and equipment which are to be operated by the navigator at the workstation for traffic surveillance/manoeuvring and considered essential for safe and efficient performance of his tasks, are to be within reach from a sitting position at the workstation.

(c) Instruments, indicators and displays providing information considered essential for the safe and efficient performance of tasks at the workstation for traffic surveillance/manoeuvring are to be easily readable from this workstation.

(d) Means to be used at intervals for securing safe course and speed in the waters to be navigated and for safety of bridge operation are to be easily accessible from the workstation for traffic surveillance/manoeuvring.

2.8.3 Workstation for navigation

(a) The workstation for navigation is to enable the following tasks to be performed:
   (i) Determine and plot the ship's position, course, track and speed.
   (ii) Effect internal and external communications related to navigation.
   (iii) Monitor time, course, speed and track, propeller revolutions, pitch indicator and rudder angle.

(b) Instruments and equipment which are to be operated by the navigator at the workstation for navigation are to be within reach of the workstation for traffic surveillance / manoeuvring.

(c) Instruments, indicators and displays providing information considered essential for the safe and efficient performance of tasks at the workstation for navigation are to be easily readable from the workstation.

(d) Means to be used at intervals for securing safe course and speed in relation to other ships and safety of bridge operation are to be easily accessible from the workstation for navigation.

2.8.4 Workstation for route planning

The workstation for route planning is to enable the following tasks to be performed:

(a) Determine the ship's position.

(b) Plan the forthcoming voyage on the basis of available information from charts and literature.

(c) Specify the detailed route by waypoints, courses and turns into the appropriate charts.

(d) Estimate time of arrival at various waypoints.

2.8.5 Workstations for manual steering

(a) The main workstation for manual steering is to enable the following tasks to be performed:
   (i) Manual steering.
   (ii) Two-way communication with workstation for docking operations.

(b) Instruments, indicators and displays providing information considered essential for the safe and efficient performance of the steering functions are to be easily readable from the workstation for manual steering.

(c) The back-up workstation for manual steering in the steering gear compartment is to enable the following tasks to be performed:
   (i) Change rudder angle by direct control of the steering gear.
   (ii) Monitor rudder angle and course.
   (iii) Effect two-way communication with the bridge.

(d) Equipment and information essential for the safe conduct of the steering functions are to be available from the position at the steering controls.

2.8.6 Workstation for safety operations

(a) The workstation for safety operations is to enable the following tasks to be performed:

(i) Monitor the safety state of the ship (fire, emergency, etc.).
(ii) Monitor and operate distress systems.
(iii) Take action on alarms and execute relevant measures.
(iv) Organize emergency operations.
(v) Consult the ship's safety plans and drawings.

(b) Information displays, alarm panels, controls and equipment enabling early detection and efficient action in abnormal internal conditions and distress situations are to be easily accessible from the workstation for safety operations.

2.8.7 Workstations for docking operations

(a) The workstation for docking operations is to enable the following tasks to be performed:
(i) Control the ship's heading and speed by having orders effected.
(ii) Monitor the heading of the ship, rudder angle and propeller revolutions (pitch and thruster effects) when relevant.
(iii) Release sound signals.
(iv) Monitor the relevant mooring stations on board and ashore.
(v) Control the mooring operations by having orders effected.

(b) Equipment essential for the safe performance of docking operations is to be available from a specific position providing the required field of vision.

(c) Information essential for safe conduct of the docking operations is to be easily readable from the workstation for docking operations.

2.9 Design Requirements for Class Notation NAV0

2.9.1 General

This paragraph contains design requirements which replace rules or are added to the requirements in 2.1 to 2.8.

2.9.2 Instrument location

External sounds received through the sound reception system are to be audible at the required volume from the workstation for navigation and traffic surveillance/manoeuvring.

2.10 Design Requirements for Class Notation NAV1

2.10.1 General

This paragraph contains design requirements which replace, or are added, to the requirements in 2.1 to 2.9.

2.10.2 Design of workplace

The workstation for navigation and traffic surveillance/manoeuvring is to be designed for one-man operation only, and a separate workstation for navigation is to be installed sufficiently close by to serve as back-up and to allow good cooperation between two navigators each at their workstation.

2.10.3 Bridge configuration

From the workstation designed for one-man operation only, it is to be possible to use lights in line astern of the ship as a visual reference for steering the ship.

2.10.4 Instrument location

(a) The workstation designed for one-man operation only, is to enable performance of the tasks specified in 2.8.2(a) (workstation for traffic surveillance/manoeuvring) and the following tasks related to navigation:

(i) Monitor the ship's performance in relation to the waters and the preplanned route on the electronic chart display.

(ii) Carry out changes of input data to the navigational system.

(iii) Monitor the performance of the automatic navigation in narrow waters by means of radar.

(b) The instruments used for monitoring and control of the navigation systems at the workstation designed for one-man operation only, are to be within reach of the navigator and the information on the display(s) is to be easily readable from the same position.

(c) The workstation for docking operations is to enable the following tasks to be performed:

(i) Effect alteration of rudder angle and propulsion.

(ii) Monitor course, speed, rudder angle, rate of turn and propeller revolutions (and indicators for pitch and thrusters, when relevant).

(iii) Acknowledge watch monitoring alarms.

(iv) Release sound signals.

(v) Monitor the mooring lines from the ship to the bollards on the wharf.

(vi) Effect two-way communication with mooring stations on board and ashore.

(vii) Effect two-way communication with wheelhouse workstations for manual steering and manoeuvring.

(viii) Effect two-way communication with machinery space and department offices.

(d) The instruments/equipment which are to be used by the docking officer at the workstation for docking operations are to be within reach.

(e) Indicators and displays providing information essential for the safe and efficient performance of docking operations are to be easily readable from the workstation.

Chapter 3
Bridge Working Environment

3.1 Requirements for Bridge Working Environment

3.1.1 Application

Ships requesting Class Notation **NAV**, **NAV0** or **NAV1** are to comply with the Rules in this Section.

3.1.2 General

(a) Throughout the various design stages of the ship, care is to be taken to achieve a good working environment for bridge personnel.

(b) Toilet facilities are to be provided on/or adjacent to the bridge.

(c) Refreshment facilities and other amenities provided for the bridge personnel are to include means for preventing damage to bridge equipment and injury to personnel resulting from the use of such facilities and amenities.

3.1.3 Vibration

Uncomfortable levels of vibration causing both short and long term effects is to be avoided in the bridge area.

3.1.4 Lighting

(a) An adequate level of lighting facilitating the performance of all bridge tasks at sea and in port, daytime and night time, is to be provided.

(b) Care is to be taken to avoid glare and stray image reflections on window and deck-head surfaces.

(c) A satisfactory degree of flexibility within the lighting system is to enable the bridge personnel to adjust lighting intensity and direction as required in the different areas of the bridge and at individual instruments and controls.

(d) During hours of darkness, it is to be possible to discern control devices and read displayed information.

3.1.5 Temperature

(a) The wheelhouse is to be equipped with an adequate temperature control system.

(b) The temperature gradient from floor level up to 2 m is to be within the range of ±1°C and not exceed ±4°C.

3.1.6 Ventilation

A sufficient range of air movement is to be available to the bridge personnel.

3.1.7 Surfaces

(a) The bridge surface finishes are to be considered an integral part of the structure, layout and environment design ad all surfaces are to be glare-free.

(b) Wheelhouse, bridge wing and upper bridge decks are to have a non-slip surface when wet or dry.

(c) All surfaces are to be robust enough to withstand the daily wear of the shipboard environment.

3.1.8 Colours

(a) Colours are to be chosen to give a calm overall impression and minimize reflection.

(b) Colour coding of functions and signals are to be in accordance with "ISO 2412 Shipbuilding: Colours of indicator lights".

3.1.9 Safety of personnel

(a) The bridge area is to be free of physical hazards to bridge personnel.

(b) Hand or grab rails are to be fitted to enable personnel to move or stand safely in bad weather. Protection of stairway openings is to be given special consideration.

(c) All safety equipment on the bridge is to be clearly marked and easily accessible and have its stowage position clearly indicated.

Chapter 4
Equipment Carriage Requirements

4.1 General

4.1.1 General

(a) Ships requesting Class Notation **NAV0** are to comply with the requirement in 4.1 and 4.2 of this Part. Ships requesting Class Notation **NAV1** are, in addition, to comply with the requirements in 4.3.

(b) The equipment listed in this chapter is to comply with the relevant requirements laid down in Chapters 5, 6 and 7.

4.2 Equipment Carriage Requirements for Class Notation NAV0

4.2.1 Course information systems

(a) The ship is to be equipped with means having the capability to determine the ship's heading in relation to geographic (true) North.

(b) The course information of the ship is to be continuously available for visual information and for integration into the relevant equipment.

(c) The ship is to be equipped with means for taking optical bearings in all directions from the bridge.

4.2.2 Steering systems

The ship is to be equipped with means for manual and automatic steering of the ship.

4.2.3 Speed measuring system

(a) The ship is to be equipped with means for measuring speed and distance through the water.

(b) Ships above 50,000 GT are to carry a speed measuring system fulfilling the requirements of (a) and are also to be capable of measuring speed in the forward, and athwart-ship directions.

4.2.4 Depth measuring system

The ship is to be equipped with means for measuring the water depth under the keel. The system is to include a separate digital display unit for installation in a deckhead console.

4.2.5 Radar systems

The vessel is to be provided with two separate and independent radar systems. At least one of the radars is to operate on X-band.

4.2.6 Traffic surveillance systems

The ship is to be equipped with means for automatic detection and tracking of other ships. The equipment is to provide continuous, accurate and rapid situation evaluation and release a visual and audible warning if a tracked target poses danger of collision.

4.2.7 Position-fixing systems

The ship is to be equipped with means for utilizing position-fixing systems applicable for the waters she is to navigate.

4.2.8 Watch monitoring and alarm transfer system

The ship is to be equipped with a technical device to monitor the alertness of the officer of the watch and warn other bridge personnel if disability occurs.

4.2.9 Internal communication systems

The ship is to be equipped with telephone systems enabling inter-communication between living quarters and the different working areas, both under normal and abnormal operating conditions.

4.2.10 Nautical safety radio communication systems

The ship is to be equipped with means for nautical safety communication with authorities and other ships as well as means for communication with tugboats and mooring station aboard and ashore.

4.2.11 Sound reception system

The ship is to be equipped with a technical device receiving sound signals outside the wheelhouse and reproducing such signals inside the wheelhouse.

4.2.12 Automatic identification system (AIS)

The ship is to be equipped with an automatic identification system (AIS) in accordance with the requirements given in SOLAS Regulation Ⅴ/19.2.4, as amended by Res. MSC.99(73).

4.2.13 Voyage date recorder (VDR)

The ship is to be equipped with a voyage data recorder (VDR) in accordance with the requirements given in SOLAS Regulation Ⅴ/20, as amended by Res. MSC.99(73).

4.2.14 Long-range identification and tracking of ships (LRIT)

The ship is to be equipped with a long-range identification and tracking (LRIT) system in accordance with the requirements given in SOLAS Regulation Ⅴ/19-1, as amended by Res. MSC.202(81).

4.2.15 Bridge Navigational Watch Alarm System (BNWAS)

The ship is to be equipped with a Bridge Navigational Watch Alarm System (BNWAS) in accordance with the requirements given in SOLAS Regulation V/19, as amended by Res. MSC.282(86).

4.3 Additional Equipment Carriage Requirements for Class Notation NAV1

4.3.1 General

In addition to the equipment carriage requirements in subsection 4.2, ships requesting Class Notation **NAV1** are to comply with the following equipment requirements:

4.3.2 Steering systems

In order to provide bridge personnel with manoeuvring information, the ship is to be equipped with means for indicating the rate of turn.

4.3.3 Course information systems

The course information of the ship is to be continuously available for visual information and for integration into the relevant equipment.

4.3.4 Speed measuring systems

The ship is to be equipped with means for measuring speed and distance and provide the traffic surveillance system with input of speed through the water.

4.3.5 Electronic chart display and information system (ECDIS)

The ship is to be equipped with an Electronic Chart Display and Information System (ECDIS) which continuously displays the ship's position and the preplanned route.

4.3.6 Automatic navigation and track-keeping system (ANTS)

The ship is to be equipped with an Automatic Navigation and Track-keeping System which automatically can keep the ship along a safe pre-planned track.

4.3.7 Conning information display

The bridge is to be equipped with a conning display which continuously presents sensor input values and corresponding orders during the ship's voyage at sea and when manoeuvring in port.

4.3.8 Central alarm panel

The bridge is to be equipped with a central alarm panel for instruments and systems related to primary bridge functions.

Chapter 5
General Bridge Equipment Requirements

5.1 General

5.1.1 Application

Ships requesting Class Notation **NAV0** or **NAV1** are to comply with the requirements in this chapter.

5.2 Environmental Condition

Instruments and equipment are to function in accordance with their specifications in the environment they are installed and under the conditions they are being used.

5.3 Location and Installation of Equipment

5.3.1 Installation

(a) All instruments, panels, etc., are to be permanently mounted in consoles or at other appropriate places, taking into account both operational and environmental conditions. All other items, such as safety equipment, tools, lights, pencils etc. to be used by bridge personnel, are to be stored in designated places.

(b) Any equipment installation and arrangement is, unless otherwise specified, to follow the instructions and recommendations detailed by the manufacturer.

(c) Radar antennas are to be installed to enable detection of targets within 360°. Blind sectors occurring in one radar system are not to occur in the other system.

5.3.2 Interference

(a) When siting equipment which is to be used in an exposed position, special care is to be taken to ensure that the siting does not impair the performance of the equipment.

(b) The antennas for radars, position-fixing receivers and VHF communication system are to be installed in such a manner that interference is avoided and designed efficiency is not substantially impaired.

(c) Transmitting and receiving antenna cables are to be widely separated.

5.3.3 Radiation hazard

(a) Antenna units are to be sited so as not to constitute a hazard to personnel working in the vicinity.

(b) Satcom or radar antenna units are required to have a warning label, detailing safe distances, posted in the vicinity or on the equipment.

(c) Radar and satcom systems are required to have relevant human risk warnings and instructions in operator handbooks.

5.3.4 Vibration and shock isolation

(a) Above-deck equipment is to be sited so as to prevent the installation from being affected by vibration.

(b) The antenna system and instrument installation are to withstand vibration to an extent which includes known standards for vibration environment according to the ship's construction, speed trim and the sea state.

(c) Antenna systems including active elements are to be provided with a mount design configurated to withstand potential shock damage.

5.3.5 Temperature protection

(a) Instruments to be installed are to be located away from excessive heat sources, such as a heating vent or equipment heat exhaust.

(b) Instruments to be fitted into a bridge instrument console are to be protected from excessive heat by conduction or, if necessary, by forced air flow.

5.3.6 Humidity protection

Equipment which is not specifically designed for outdoor installation is not to be installed near a doorway, open window or hatch opening, due to the flow of humid salt air which may cause internal corrosion.

5.3.7 Compass safe distance

When equipment is being installed, care is to be taken to ensure that the accuracy of the ship's magnetic compasses is adequately safeguarded.

5.4 Electrical Power Supply, Alarms, Performance Confirmation and Failure Protection

5.4.1 Electrical power supply

(a) Bridge equipment is to be connected to electric power supplies as specified in the International Convention for the Safety of Life at Sea.

(b) In addition to the equipment listed in (a), the emergency source of electrical power is to be provided for the Global Positioning System (GPS) and the electronic chart display and information system when installed.

(c) Equipment essential for the performance of primary bridge functions is, unless powered from a battery source, to be provided with an uninterruptible power supply (UPS) with a capacity to keep the equipment running during a black-out period of at least 60 s, and be automatically reinstated upon recovery from a black-out lasting from 60 s up to 30 minutes. The equipment regarded essential for the performance of primary bridge functions in this context is:

(i) gyro compass (at least one)

(ii) radar or ARPA (at least one including antenna)

(iii) position-fixing system — GPS or GLONASS

(iv) ECDIS.

5.4.2 Alarms

(a) Means are to be provided to release both audible and visual alarms in the case of degraded system performance for primary bridge equipment.

(b) An acknowledged alarm is to be clearly distinguishable from an unacknowledged alarm.

(c) In colour graphic systems, it is not be regarded acceptable to distinguish between unacknowledged and acknowledged alarms by means of colour only.

(d) If an alarm channel in a computer-based system is blocked manually, this is to be clearly indicated by a visual signal.

(e) When forced ventilation or cooling of equipment is required for high temperature protection, an alarm is to be released in case of failure in the ventilation or cooling system.

5.4.3 Performance confirmation

Essential equipment for performance of bridge functions is to provide the capability to perform self-test of major functions, either automatically or manually initiated.

5.4.4 Failure protection

Bridge equipment is to be protected against failure in externally connected equipment.

5.5 Computer-based Systems and Software Quality

5.5.1 Computer-based systems

(a) When failure in computer-based systems can affect safe navigation and manoeuvring of the ship, the requirements of (b), (c) and (d) are to be fulfilled.

(b) When a computer-based system forms part of a navigation or manoeuvring system, a FMEA (Failure Mode & Effect Analysis) for the total system performance is to be carried out.

(c) If integrated computer-based systems are used for automatic operation of the ship's speed and course according to input parameters from programmed routing, electronic position-fixed and traffic detection devices, a system failure is not to cause a critical situation for the ship.

(d) The switch-over function to a redundant system is to be simple to execute.

(e) A redundant programmable electronic system (PES) is not to be considered required if an easily accessible and easily operated back-up system is provided.

(f) Adequate filtering of analogue and digital input signals is to be provided.

(g) Software and data necessary to ensure satisfactory performance of the computer system is to be stored in a non-volatile memory (e.g. ROM), or a volatile memory with an uninterruptible power supply.

(h) Access to the computer's operating system is to be highly restricted, and any alteration of system software after final inspection and testing on board is to be subject to approval in advance by the Society.

(i) Each computer system is to be functionally tested in the presence of a Surveyor if no other arrangement has been made.

(j) The functional test is to be based on an approved test program and is to cover failure simulation of internal faults, as well as faults external to the computer system.

5.5.2 Software quality

(a) The relevant software quality attributes are:
   (i) reliability
   (ii) safeguard against error and misuse
   (iii) fault detection
   (iv) fault correction
   (v) fail-safe.

(b) Critical software is to be developed and tested according to well documented software development methodology. Software requirement specification, design description, coding and implementation are to be given consideration, as follows:
   (i) Software requirement specification

This specification is to clearly and precisely describe the requirements for the software and is, as a minimum, to contain the following:

(1) Input data description, including the required error tolerance capabilities of the software.

(2) Requirements for the individual functions to be performed by the software, including accuracy requirements and requirements for recovery from computation failures, hardware faults, device error, etc.

(3) Requirements for the self-testing and diagnostic capabilities of the software.

(4) Requirements for outputs, including presentation and accuracy.

(5) Requirements for user-operation (man and machine interface).
The requirements are to be explicitly itemized so that they may easily be traced back to the software design description.

(ii) Software design description

The program structure and organization are to be described and a standard design representation technique established and followed. The design is to be organized in a "top down" fashion, that is in a hierarchical tree structure, each level of the tree representing lower levels of detail description of the processing. Tasks performed at each level are to be clearly described. The programs are to be organized as small, well arranged modules and their interaction is to be standardized and kept to a minimum. The software design description is, as a minimum, to contain the following:

(1) Description of the total program structure, using a standard design representation technique.

(2) Description of inputs, outputs, processing and limitation of each module.

(3) Memory map giving a total overview of the location of the programs, e.g. located in main memory, sub-module, intelligent terminal or printer, etc., and the programming languages used to develop the programmes.

(4) Description of priority of program modules.

(5) Description of the convention used.

Chapter 6

Specific Requirements for Different Types of Bridge Equipment

6.1 General

6.1.1 Application

(a) Ships requesting Class Notation **NAV0** are to comply with the requirements in 6.1 to 6.12.

(b) Ships requesting Class Notation **NAV1** are to comply with the requirements in 6.1 to 6.16.

6.2 Course Information Systems

6.2.1 General

(a) The gyro compass system is to comply with IMO's Res. A.424(XI), "Performance Standard for Gyro Compasses".

(b) The gyro compass system is to perform according to specifications for the latitudes where the ship is to operate and at the speed it will achieve.

(c) Means are to be provided for correction of errors induced by speed and latitude.

6.3 Steering Systems

6.3.1 General

(a) The autopilot is to comply with IMO's Res. A.342(IX), "Performance Standard for Automatic pilots".

(b) The off-course alarm is not to be released when setting new course reference.

(c) The manual override control is to enable instant take-over from the autopilot as well as from the manual steering station.

(d) The rate-of-turn indicator is to comply with IMO's Res. A.526(13), "Performance Standards for Rate-Of-Turn Indicators".

(e) The maximum value on the scale of the rate-of-turn indicator is to be in accordance with the ship's manoeuvring characteristics and the maximum preset rate-of-turn value of the autopilot.

6.4 Speed Measuring Systems

6.4.1 General

The speed log is to comply with IMO's Res. A.824(19), "Performance Standards for Devices to Indicate Speed and Distance" as amended by MSC.96(72).

6.5 Depth Measuring Systems

6.5.1 General

The echo sounder is to comply with IMO's Res. A.224 (VII) "Performance Standards for Echo-Sounding Equipment".

6.6 Radar Systems

6.6.1 General

(a) The radar installation is to comply with IMO's Res. A.477(XII), "Performance Standard for Navigational Radar Equipment" as amended by MSC.192(79).

(b) The radar display is to have an effective diameter of at least 250 mm.

(c) The radar is to have facilities which enable the operator to monitor the ship's track along a coastline continuously.

(d) Inter-switching facilities are to be provided to improve the flexibility and availability of the overall radar installation.

(e) If a radar inter-switch unit is fitted, it is to be possible to bypass this unit in a simple way in case of failure in the inter-switch.

6.7 Traffic Surveillance Systems

6.7.1 General

The traffic surveillance system is to have automatic target acquisition and comply with IMO's Res. A.823(19), "Performance Standards for Automatic Radar Plotting Aids" as amended by MSC.192(79).

6.8 Position-fixing Systems

6.8.1 General

(a) The equipment is to be able to display the ship's real time position continuously.

(b) The equipment is to display the ship's real time position in geographic coordinates.

(c) The equipment is not to display data to a greater resolution than is feasible by the measurement with which it is associated.

(d) The equipment is to automatically select the best transmitter configuration available.

(e) The equipment is to be provided with effective means for preventing noise and interference.

(f) Equipment that needs input from ship-borne sensors to perform in accordance with specifications is to have facilities for manual input of data in case of sensor failure. The equipment is to indicate if the system is in manual input mode.

(g) Equipment that includes an active antenna element (pre-amplifier) is to provide means to indicate loss of amplifier function or loss of antenna connection.

(h) The equipment is to provide a digital output format to interface relevant external systems.

(i) The Global Position System (GPS) receiver is to comply with IMO's Res. A.819(19) "Performance Standards for Ship-borne Global Positioning System (GPS) Receiver Equipment" as amended by MSC.112(73).

(j) The Loran-C and Chayka Receivers are to comply with IMO's Res. A.818 (19) "Performance Standards for Ship-born Loran-C and Chayka Receivers".

(k) The Decca Navigator Receivers are to comply with IMO's Res. A816 (19) "Performance standards for Ship-born Decca Navigator Receivers".

6.8.2 Accuracy

(a) The accuracy of a position fix involves both fixed and random errors and can only be described in terms of probability. The 95% probability figure ($2d_{rms}$) is to be used to describe the accuracy of the position fix derived by the position-fixing equipment.

(b) The equipment is to provide position fixes within the accuracy standard to which the radio navigation system is designed.

(c) The equipment is to be provided with either automatic or manual means for correction of known position errors in the waters the ship is to navigate.

6.8.3 Monitoring

(a) The equipment is to be provided with either automatic or manual self-test of major functions.

(b) The equipment is to monitor the quality of both the received signals and the computed position.

(c) The equipment is to release both a visual and an audible alarm when the alarm threshold is exceeded.

6.8.4 Integrated positioning system

(a) The system is to enable automatic selection of the best position systems to use, regardless of the ship's location.

(b) When on automatic sensor selection, the equipment is to have the ability to automatically compensate for world-wide integral error models, including adjustment for both seasonal and diurnal conditions.

(c) The equipment is to enable each sensor interface to operate equivalent to that of a self-contained single mode receiver without degradation in performance.

6.9 Watch Monitoring and Alarm Transfer Systems

6.9.1 General

(a) Unattended bridge and danger to navigation caused by operator disability, traffic or improper course-keeping in relation to planned route are to be monitored.

(b) Alarms and warnings are to be released and automatically transferred to specific locations in order to alert another qualified navigator if the monitoring system indicates that the bridge is unmanned or that proper action is not being taken to avoid the danger of collision or grounding.

(c) The watch monitoring and alarm transfer system are to comply with requirements laid down by the ship's state of register.

6.9.2 Operator fitness check system

(a) The monitoring system for the detection of operator disability is to verify that the bridge is manned and indicate that the officer of the watch is alert.

(b) The monitoring system for detection of operator disability is not to cause undue interference with the performance of primary bridge functions.

(c) Any interval checking system is to be so designed to prevent mal-operation.

6.9.3 Traffic monitoring

(a) In order to safeguard against the risk of collision, a collision warning system is to enable detection of floating objects which may come into a collision course and release an alarm in accordance with procedures found appropriate for the waters to be navigated.

(b) A traffic monitoring system providing the capability of automatic acquisition is, in sufficient time for the navigator to take proper action, to identify targets which may represent danger of collision should their present course be altered at a closer range. This device may be a separate unit or it may be an integral part of an ARPA which has the required capability.

6.9.4 Position monitoring

In order to safeguard against the risk of grounding, a position-monitoring system is to enable detection of cross-track error in relation to the pre-planned route and release an alarm at a time to danger of grounding which allows for proper and effective action to be taken by the back-up officer.

6.9.5 Alarm and warning transfer system

(a) Alarms/warnings which are not acknowledged are to be transferred from the bridge to alert the master and an appointed back-up navigator if required.

(b) Whether a wireless transfer system or fixed installation is adopted in accordance with (a), the alarms/warnings are always to be transferred by a fixed installation to the following areas:
   (i) Captain's cabin.
   (ii) Captain's office.
   (iii) Officers' office.
   (iv) Officers' mess.
   (v) Officers' day room.
   (vi) Other relevant public areas.

(c) In addition to the locations listed in (b), it is to be possible to include any of the cabins of the watch officers in the fixed alarm transfer system by selection.

(d) Acknowledgment of alarms/warnings is only to be possible from the bridge.

(e) The time allowed for acknowledgement of alarms/warnings is to be as short as possible, taking into account the time required for moving from a distant position on the bridge to the device for acknowledgement.

(f) The main alarm system is to be continuously powered and is to have an automatic change-over to a stand-by power supply in case of loss of normal power supply.

6.10 Internal Communication Systems

6.10.1 Battery-less telephone systems

(a) To secure internal communications independent of electrical power supply, a battery-less telephone system is to be provided for two-way communication between wheelhouse and:
   (i) Engine control room
   (ii) Steering gear room
   (iii) Captain's living quarters
   (iv) Chief engineer's living quarters
   (v) Radio room (when located outside bridge area).

(b) In the steering gear room, facilities are to be provided to avoid noise interference when using the battery-less telephone.

6.10.2 Automatic telephone systems

(a) The automatic telephone network is to provide two-way communication between the bridge, all workstations and all relevant spaces.

(b) The telephone network is to be designed for a minimum capacity of two simultaneous calls.

(c) The wheelhouse is to be fitted with two independent user extensions.

(d) The telephones in the wheelhouse and engine control room are to have priority function over any other extension.

(e) A reference list of extensions is to be permanently posted within reach of each telephone.

(f) The automatic telephone network is to function during black-out.

(g) Incoming calls on an adjacent telephone are to be distinguishable by lights and/or different chimes.

6.10.3 Public address systems

(a) The public address (PA) system is to enable point-to-point loud hailing intercom between the bridge and all relevant areas.

(b) The PA control module is to be suitable for flush panel mounting in workstation consoles.

(c) Outdoor substations are to be mounted in a watertight housing.

(d) Each substation panel is to be equipped with an activation light to indicate communication readiness. The talk-back speaker systems are to have volume control.

(e) The amplifier units are to be protected against failure in intercom network or in substation equipment.

(f) The public address system is to work during blackout.

6.11 Nautical Communication Systems

6.11.1 VHF system

(a) The VHF system is to comply with the 1988 amendments to the 1974 SOLAS Convention concerning Radio communications for the Global Maritime Distress and Safety System.

(b) Within the bridge area, provisions are to be made for the installation of at least two VHF radio telephone stations.

6.11.2 UHF system

(a) To assist in safety and navigation, the bridge is to be provided with at least four portable UHF transceivers operating in the 457-467 MHz band.

(b) The equipment is to include microphone, loudspeaker and chargeable batteries.

(c) The capacity of the battery is to be sufficient to operate the equipment continuously for at least five hours.

(d) A minimum of two charger units providing relevant capacity are to be installed in an easily accessible location.

6.12 Sound Reception System

6.12.1 General

The sound reception system is to be capable of receiving sound signals in the frequency range 70-700 Hz outside the wheelhouse.

6.13 Electronic Chart Display and Information System (ECDIS)

6.13.1 General

The electronic chart display and information system is to comply with IMO's Res. A817(19) "Performance Standard for Electronic Chart Display and Information System (ECDIS)" as amended by MSC.232(82).

6.14 Automatic Navigation and Track- keeping System (ANTS)

6.14.1 General

(a) By integrating a position-fixing system, an electronic chart display and information system (ECDIS) and an automatic steering system, the ANTS are to be able to perform automatic steering of the ship along a route preplanned in straight and curved lines.

(b) It is to be possible to adjust the displayed chart for geographical inaccuracies.

(c) If the quality of the filtered position input to ECDIS is not accepted by the system, this is considered a malfunction condition of the ANTS and is to be indicated by both a visual warning on the display and an audible alarm.

(d) An alarm is to be activated if malfunction of the ANTS occurs. The alarm is to be included in the alarm and warning transfer system specified in 6.9.5.

(e) Malfunction of the ANTS is to result in the least critical of any new condition (fail-safe).

6.14.2 Course alteration warnings

(a) In order to warn the navigator about a forthcoming course alteration, the ANTS is to be able to give a warning at a present time before the wheel-over point.

(b) In order to warn the navigator before the alteration of course is executed, the ANTS is to request acknowledgment of course alteration.

6.14.3 Additional requirements for the course information system

The accuracy of the ship's heading used within the ANTS is to be a value that has been corrected for any errors typical to the source of the heading input.

6.14.4 Additional requirements for the steering system

(a) The steering system is to be able to perform automatic track-keeping of the ship within the limits set on both sides of the preplanned track.

(b) When performing track-keeping in the turns, the steering system is to be able to steer in accordance with the preplanned turn radius.

(c) The steering system is to provide the capability to steer the ship along a route consisting of straight and curved lines by both automatic and manual input of turn orders.

6.14.5 Additional requirements for the speed measuring system

The speed input is to be provided with sufficient accuracy to safeguard the quality of position-fixing by dead reckoning.

6.14.6 Additional requirements for the position-fixing systems

(a) The ANTS is to be provided with the most accurate position of the ship.

(b) The quality of the integrated position-fixing system is to be monitored. If the quality of the position-fixing system is lower than an acceptable limit, a warning is to appear.

6.15 Conning Information Display

6.15.1 General requirements

(a) The conning information display is to comply with the requirements in Chapter 7.

(b) All information required for the efficient monitoring of automatic performance of primary functions are to be easily accessible.

(c) The layout of the display is to be designed for easy reading of the manoeuvring state of the ship.

6.16 Bridge Navigational Watch Alarm System (BNWAS)

6.16.1 General

The purpose of a bridge navigational watch alarm system (BNWAS) is to monitor bridge activity and detect operator disability which could lead to marine accidents. The system monitors the awareness of the Officer of the Watch (OOW) and automatically alerts the Master or another qualified OOW if for any reason the OOW becomes incapable of performing the OOW's duties. This purpose is achieved by a series of indications and alarms to alert first the OOW and, if he is not responding, then to alert the Master or another qualified OOW. Additionally, the BNWAS may provide the OOW with a means of calling for immediate assistance if required. The BNWAS is to be operational whenever the ship's heading or track control system is engaged, unless inhibited by the Master.

6.16.2 Operational requirements

(a) The BNWAS is to incorporate the following operational modes:
  (i) Manual ON (In operation constantly)
  (ii) Manual OFF (Does not operate under any circumstances)

(b) Operational sequence of indications and alarms
  (i) Once operational, the alarm system is to remain dormant for a period of between 3 and 12 min (Td).
  (ii) At the end of this dormant period, the alarm system is to initiate a visual indication on the bridge.
  (iii) If not reset, the BNWAS is additionally to sound a first stage audible alarm on the bridge 15 s after the visual indication is initiated.
  (iv) If not reset, the BNWAS is additionally to sound a second stage remote audible alarm in the back-up officer's and/or Master's location 15 s after the first stage audible alarm is initiated.
  (v) If not reset, the BNWAS is additionally to sound a third stage remote audible alarm at the locations of further crew members capable of taking corrective actions 90 s after the second stage remote audible alarm is initiated.
  (vi) In vessels other than passenger vessels, the second or third stage remote audible alarms may sound in all the above locations at the same time. If the second stage audible alarm is sounded in this way, the third stage alarm may be omitted.

(vii) In larger vessels, the delay between the second and third stage alarms may be set to a longer value on installation, up to a maximum of 3 min, to allow sufficient time for the back-up officer and/or Master to reach the bridge.

(c) Reset function

(i) It is not to be possible to initiate the reset function or cancel any audible alarm from any device, equipment or system not physically located in areas of the bridge providing proper look out.

(ii) The reset function is, by a single operator action, to cancel the visual indication and all audible alarms and initiate a further dormant period. If the reset function is activated before the end of the dormant period, the period is to be re-initiated to run for its full duration from the time of the reset.

(iii) To initiate the reset function, an input representing a single operator action by the OOW is required. This input may be generated by reset devices forming an integral part of the BNWAS or by external inputs from other equipment capable of registering physical activity and mental alertness of the OOW.

(iv) A continuous activation of any reset device is not to prolong the dormant period or cause a suppression of the sequence of indications and alarms.

(d) Emergency call facility

Means may be provided on the bridge to immediately activate the second, and subsequently third, stage remote audible alarms by means of an "Emergency Call" push button or similar.

6.16.3 Accuracy

The alarm system is to be capable of achieving the timings stated in section 6.16.2(b) with an accuracy of 5 % or 5 s, whichever is less, under all environmental conditions.

6.16.4 Security

The means of selecting the Operational Mode and the duration of the Dormant Period (Td) is to be security protected so that access to these controls is to be restricted to the Master only.

6.16.5 Malfunction

If a malfunction of, or power supply failure to, the BNWAS is detected, this is to be indicated. Means are to be provided to allow the repeat of this indication on a central alarm panel if fitted.

6.16.6 Operational controls

(a) A protected means of selecting the operational mode of the BNWAS.

(b) A protected means of selecting the duration of the dormant period of the BNWAS.

(c) A means of activating the "Emergency Call" function if this facility is incorporated within the BNWAS.

(d) Reset facilities

Means of activating the reset function is only to be available in positions on the bridge giving proper look out and preferably adjacent to visual indications. Means of activating the reset function is to be easily accessible from the conning position, the workstation for navigating and manoeuvring, the workstation for monitoring and the bridge wings.

6.16.7 The operational mode of the equipment is to be indicated to the OOW.

6.16.8 Visual indications

The visual indication initiated at the end of the dormant period is to take the form of a flashing indication. Flashing indications are to be visible from all operational positions on the bridge where the OOW may reasonably be expected to be stationed. The colour of the indication(s) is to be chosen so as not to impair night vision and dimming facilities (although not to extinction) are to be incorporated.

6.16.9 First stage bridge audible alarm

The first stage audible alarm which sounds on the bridge at the end of the visual indication period is to have its own characteristic tone or modulation intended to alert, but not to startle, the OOW. This alarm is to be audible from all operational positions on the bridge where the OOW may reasonably be expected to be stationed. This function may be engineered using one or more sounding devices. Tone/modulation characteristics and volume level are to be selectable during commissioning of the system.

6.16.10 The remote audible alarm which sounds in the locations of the Master, officers and further crew members capable of taking corrective action at the end of the bridge audible alarm period is to be easily identifiable by its sound and is to indicate urgency. The volume of this alarm is to be sufficient for it to be heard throughout the locations above and to wake sleeping persons.

6.16.11 design and installation

(a) General

The equipment is to comply with IMO resolutions A.694(17) and A.813(19), their associated international standards and MSC/Circ.982 regarding Guidelines for Ergonomic Criteria for Bridge Equipment and Layout.

(b) System physical integrity

All items of equipment forming part of the BNWAS are to be tamper-proof so that no member of the crew may interfere with the system's operation.

(c) Reset devices

Reset devices are to be designed and installed so as to minimize the possibility of their operation by any means other than activation by the OOW. Reset devices are all to be of a uniform design and are to be illuminated for identification at night.

(d) Alternative reset arrangements may be incorporated to initiate the reset function from other equipment on the bridge capable of registering operator actions in positions giving proper look out.

(e) Power supply

The BNWAS is to be powered from the ship's main power supply. The malfunction indication and all elements of the Emergency Call facility, if incorporated, are to be powered from a battery maintained supply.

6.16.12 Interfacing

(a) Inputs

Inputs are to be available for additional reset devices or for connection to bridge equipment capable of generating a reset signal by contacts, equivalent circuits or serial data.

(b) Outputs

Outputs are to be available for connection of additional bridge visual indications and audible alarms and remote audible alarms as shown in Fig. XIII 6-1.

6.17 Central Alarm Panel

6.17.1 General requirements

(a) Alarms and warnings to be emitted by instruments and systems for performance of primary bridge functions are to be centralized in one common panel on the bridge for easy identification and acknowledgement of the individual alarms.

(b) The alarm panel is to provide the capability of emitting both a visual and an audible warning for the individual instruments.

(c) Acknowledgement of an alarm at either the instrument or the alarm panel is to cancel the audible warning at both sources.

(d) Cancellation of the visual warning on the alarm panel is only to be possible at the instrument.

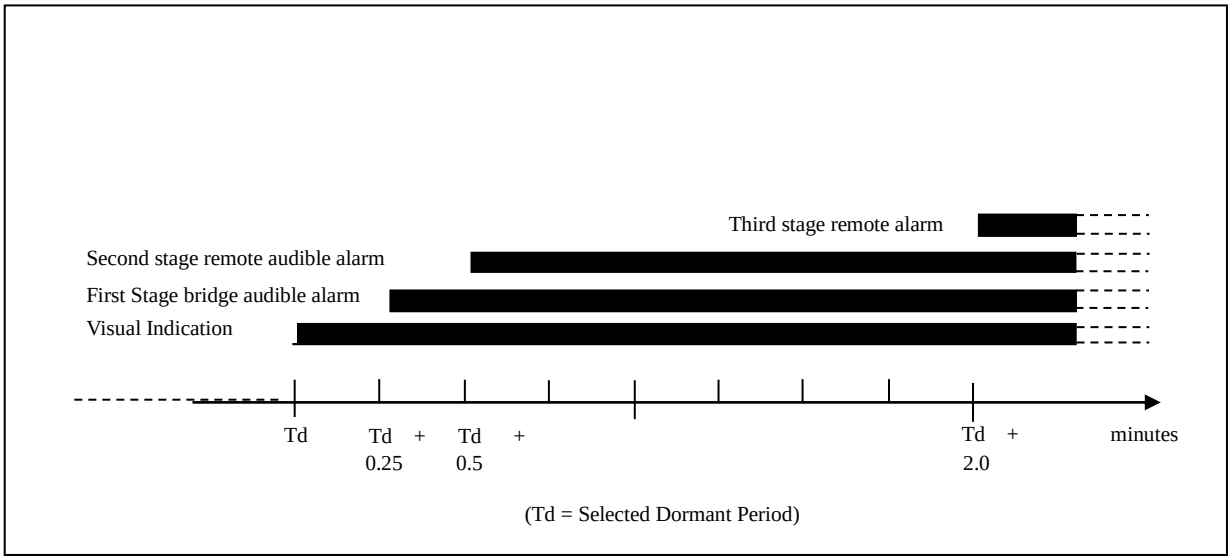

Fig. XIII 6-1
Alarm Sequence without Acknowledgements

Chapter 7

Man/Machine Interface

7.1 General Requirements

7.1.1 Application

(a) Ships requesting Class Notation **NAV0** or **NAV1** are to comply with the requirements in this chapter.

(b) All instruments are to be logically grouped according to their functions within each workstation. Their location and design are to give consideration to the physical capabilities of the human operator and comply with accepted ergonomic principles.

(c) The amount of information to be presented for conducting the various tasks as well as the methods of displaying the information needed are to give consideration to the capabilities of the human operator to percept and process the information made available.

7.2 Instrument Location and Design

7.2.1 General

(a) Instruments or displays providing visual information to more than one person is to be located for easy viewing by all users concurrently. If this is not possible, the instruments or displays are to be duplicated.

(b) The method of presentation is to ensure that the instrument data is clearly visible to the observer at a practicable distance in the light conditions normally experienced on the bridge by day and by night. All menus and displays are to provide a self-explanatory interface to the user.

(c) The operation of a control is not to obscure indicator elements where observation of these elements is necessary for adjustments to be made.

7.2.2 Location

(a) Instruments are to be readable from the operating position of the workstation they are providing information to.

(b) Instruments operated or fitted in connection with controls are to be readable from a distance of at least 1000 mm. All other instruments are to be readable from a distance of at least 2000 mm.

(c) Each instrument is to be placed with its face normal to the navigator's line of sight, or to the mean value if the navigator's line of sight varies through an angle.

(d) Controls or combined controls/indicators are to be visually and tactually distinguishable from elements which only indicate.

(e) Instruments are to be designed to facilitate console installation and mounting in a group with instruments of other makes.

7.2.3 Design

(a) All instruments are to be designed to permit easy and accurate reading by day and by night.

(b) Instrument letter type is to be of simple, clear-cut design.

(c) The purpose of each control and indicator is either to be clearly illustrated by symbols where standard symbols have been internationally adopted or indicated by a label in English.

(d) Operational controls are to be easily accessible and easy to identify.

(e) The shape of mechanical controls is to indicate the method of operation of the control.

(f) The position/function allocation and purpose of control elements, as well as the function and layout of indicator elements, are to be logically coordinated.

(g) The presentation of graphic or mimic diagrams is to be in accordance with ergonomic principles and easy to understand and operate. The status of the information displayed is to be clearly indicated.

(h) Mal-operation of a computer-based bridge instrument is not to cause any loss of data, damage of programmes or malfunction of the system.

7.3 Illumination and Individual Lighting of Instruments

7.3.1 General

All illumination and lighting of instruments, keyboards and controls are to be adjustable down to zero, except the lighting of warning and alarm indicators and the control of dimmers, which are to remain readable.

7.3.2 Illumination

(a) To avoid unnecessary light sources in the front area of the bridge, only instruments necessary for the safe navigation and manoeuvring of the ship are to be located in this area.

(b) Instruments are to be designed and fitted to minimize glare or reflection and prevent being obscured by strong light.

(c) All information is to be presented on a background of high contrast, emitting as little light as possible by night.

(d) Indicator lights and the illumination of all instruments are to be designed and fitted to avoid unnecessary glare or reflection, or the instruments being obscured by strong light.

(e) Operator keyboards and other functional controls are to be illuminated to ensure ease of operation in darkness.

(f) Means for adjusting the display and keyboard brightness are to be provided.

(g) Warning and alarm indicators are to be designed to show no light in normal position (indication of a safe situation). Means are to be provided to test the lamps.

(h) Each instrument is to be fitted with an individual light adjustment. In addition, groups of instruments normally in use simultaneously may be equipped with common light adjustment.

(i) Colour coding of functions and signals is to be in accordance with ISO 2412 "Shipbuilding: Colours of indicator lights".

7.4 Requirements for the Man/Machine- Dialogue of Computer Based Systems

7.4.1 General

The man/machine-dialogue of a computer based system is to enable the operator to perform his tasks as intended in an efficient and user-friendly manner.

Chapter 8
Ship Manoeuvring Information

8.1 General

8.1.1 Application

Ships requesting Class Notation **NAV1** are to comply with the requirements in this chapter.

8.1.2 General

(a) Information about the ship's manoeuvring characteristics enabling the navigator to safely carry out manoeuvring functions is to be available on the bridge.

(b) This chapter deals with:
  (i) manoeuvring information to be provided; and
  (ii) presentation of the manoeuvring information.

(c) The manoeuvring information to be provided is to be presented by means of:
  (i) pilot card;
  (ii) wheelhouse poster; and
  (iii) manoeuvring booklet.

(d) The method of identifying the manoeuvring characteristics of the ship are subject to approval. These results of individual tests, trials and estimations are to be submitted for information.

8.1.3 Manoeuvring information

(a) Before being assigned Class Notation **NAV1**, the information on the manoeuvrability of the ship is to be established for at least one loading condition.

(b) Information on the manoeuvrability of the ship not covered by the original data is to be complied as experience is gained in manoeuvring the ship under different operating conditions.

(c) Additional information compiled on the manoeuvring characteristics is to be registered in the manoeuvring booklet and the wheelhouse poster when applicable.

8.1.4 Sister ships

(a) For ships built in series according to identical drawings, only one ship in the series has to undertake the complete trial program according to these Rules. The other ships of the series can adopt the information from these trials provided a reduced trial programme is satisfactory completed.

(b) A sister ship is at least to make the following trials:
  (i) speed trial at full speed ahead;
  (ii) stopping trial from full speed ahead; and
  (iii) turning circle trials at full speed ahead to both port and starboard.

(c) All information which is duplicated from a sister ship is to be marked with a statement to this effect together with the identification of the sister ship.

8.2 Provision of Manoeuvring Information

8.2.1 General

Information regarding the ship's manoeuvring characteristics is to be provided to give the navigator the best presumption in selecting the correct speed and rudder angle relative to the prevailing conditions and intended manoeuvre.

8.2.2 Speed ability

Information about speed ability in terms of the actual speed potential of the ship at various engine settings is to be provided. Trials are to be performed at three engine settings identifying the percentage used for the maximum continuous rating (MCR) of power:

(a) at full speed ahead

(b) at half speed ahead

(c) at slow speed ahead

8.2.3 Stopping ability

Information about the ship's stopping abilities is to be provided. Trials are to be made from an initial full speed ahead and with application of the following astern powers:

(a) constant full astern power

(b) with propulsion and engine stopped.

8.2.4 Turning ability

Information about the ship's turning ability at full speed, from full speed with engines stopped and when accelerating from rest to full speed ahead is to be provided. Turning trial runs are to be made to port and to starboard.

(a) Using maximum rudder angle without changing engine control settings form initial full speed ahead.

(b) From an initial full speed ahead and then stopping the engine at the start of the turn (coasting turn).

(c) From initial standstill with propeller stopped and applying half speed ahead using maximum rudder simultaneously (accelerated turning trial).

8.2.5 Course change ability

Information about the ship's initial turning ability at various rudder angles is to be provided for full and slow speed situations. Zigzag trials are to be made to port and to starboard for rudder angles equal to 10° and 20° for conventional rudder systems.

8.2.6 Low speed steering abilities

Information about the lowest constant engine revolutions or lowest pitch control setting at which the ship can safely be steered in ballast and loaded conditions is to be provided.

8.2.7 Course stability

Information about the course stability of the ship is to be provided. A pullout trial is to be made to port and starboard. A spiral trial is to be made if the pullout trial indicates that the ship is unstable.

8.2.8 Auxiliary manoeuvring device trial

(a) Information about the performance and effect of auxiliary devices installed in order to improve the manoeuvring abilities of the ship is to be provided.

(b) The ability to turn by means of thrusters is to be determined.

(c) The forward speed at which the device ceases to be effective is to be determined.

(d) When applicable, the ability to move sideways is to be determined. Depending on the device configuration, the trial is to be made with at least one unit at maximum output and the others adjusted to give practically pure sidling.

8.2.9 Man-overboard rescue manoeuvre

Information about the performance of an effective man-overboard rescue manoeuvre is to be provided. Manoeuvring test to establish the most effective manoeuvre procedure in case of man over board is to be carried out.

8.3 Presentation of Manoeuvring Information

8.3.1 Pilot card

(a) A pilot card is to provide the pilot with information on the current condition of the ship with regard to its loading condition, propulsion and manoeuvring equipment and other relevant equipment.

(b) A pilot card form is to be available on the bridge at each port call.

8.3.2 Wheelhouse poster

(a) A summary of manoeuvring information on the ship is to be worked out in the format of a wheelhouse poster.

(b) The wheelhouse poster is to be permanently displayed in the wheelhouse. It is to contain general particulars and detailed information describing the manoeuvring characteristics of the ship, and be of sufficient size to ensure ease of use.

(c) The wheelhouse poster is to be marked with a warning that the manoeuvring performance of the ship may differ from that shown on the poster due to environmental, hull and loading conditions.

8.3.3 Manoeuvring booklet

The manoeuvring booklet is to be available on board and is to contain details of the ship's manoeuvring characteristics and other relevant data. The manoeuvring booklet is to include the information shown on the wheelhouse poster together with other available manoeuvring information. Most of the manoeuvring information in the booklet can be estimated, based on the data obtained from the trials specified in this chapter. The information in the booklet may be supplemented in the course of the ship's life.

Chapter 9
Qualifications and Operational Procedures

9.1 General

9.1.1 Application

(a) Ships requesting Class Notation **NAV0** are to comply with the requirements in 9.1, 9.2.1, 9.2.2 and 9.3.1 to 9.3.6.

(b) Ships requesting Class Notation **NAV1** are to comply with all the requirements in this chapter.

9.1.2 Responsibilities of ship-owners and ship operators.

(a) The ship-owner or the ship operator is to submit for approval copies of the instructions and procedures established to comply with the requirements in this chapter with regard to:

(i) Responsibilities and duties of relevant personnel on board.

(ii) Qualification.

(iii) Bridge procedures.

(iv) Operational safety procedures.

The approval is limited to ensure that relevant requirements in this chapter are included in the instructions and procedures.

(b) For ships requesting Class Notation **NAV0**, instructions and procedures documenting compliance with the requirements in 9.1, 9.2.1, 9.2.2 and 9.3.1 to 9.3.6 are to be submitted for approval.

(c) For ships requesting Class Notation **NAV1**, instructions and procedures documenting compliance with the requirements in 9.1, 9.2 and 9.3 are to be contained in the operational safety manual to be submitted for approval in accordance with the requirements in 9.4.

9.1.3 Responsibilities of the master

(a) The master is to ensure that watch-keeping arrangements are adequate for maintaining a safe navigational watch.

(b) Before assigning a navigational officer of the ship the responsibility of single-man watch-keeping, the master is to ascertain that the officer is qualified.

(c) The master is to ensure that the officer of the watch only acts as a sole look-out when, in that officer's judgement, the workload is well within his capacity to maintain a proper look-out and full control of the prevailing situation.

(d) The master is to designate individuals who are to provide assistance when needed by the officer of the navigational watch acting as sole look-out.

(e) The master is to ensure that the manning of the bridge watch is in accordance with national regulations in the country of registration and for the waters the ship is navigating.

9.1.4 Responsibilities of the officer in charge of single-man watch-keeping

(a) Under the master's general direction, the officers of the watch are to be responsible for navigating the ship safely during their periods of duty and carry out bridge operations in accordance with established procedures.

(b) The officer of the watch is carefully to assess that the workloads is well within his capacity to maintain full control of the functions to be performed and the operational situation.

(c) The officer is immediately to summon assistance to the bridge in case of abnormal operational conditions including situations causing excessive workloads.

9.2 Qualifications

9.2.1 Assumptions

It is assumed that masters and officers in charge of a navigational watch meet the relevant mandatory minimum requirements for certification as specified in the Annex of the International Convention on Standards of Training, Certification and Watch-keeping for Seafarers, 1978, as amended 2010, Chapter II, Regulations II/1 to II/3, as well as meet the knowledge requirements set forth in this chapter for officers in charge of single-man watch-keeping applicable for the relevant Class Notation.

9.2.2 Knowledge requirements for Class Notation **NAV0**

An officer assigned single-man watch-keeping is to have watch-keeping experience and proper knowledge of the specific instruments and equipment to be used.

9.2.3 Knowledge requirements for Class Notation **NAV1**

An officer being assigned single-man watch-keeping in narrow waters is to have watch-keeping experience from such waters and proper knowledge of methods for the planning and performance of navigation in narrow waters in various operational modes.

9.2.4 Documentation of qualifications

Officers to be assigned the responsibility of single-man watch-keeping in narrow waters are to be able to document that they are properly qualified to carry out the bridge functions and operate the equipment and systems installed on the bridge.

9.3 Bridge Procedures

9.3.1 Assumptions

It is assumed that the bridge personnel is to observe the basic principles in keeping a navigational watch as set forth in the Annex of the International Convention on Standards of Training, Certification and Watchkeeping for Seafarers, 1978, as amended 2010, Chapter VIII, Regulation VIII/2.

9.3.2 General

(a) The basic principles referred to 9.3.1, including but not limited to the following, is to be taken into account on all ships:

(i) Watch arrangements

(ii) Fitness for duty

(iii) Taking over the watch

(iv) Performing the navigational watch

(v) Look-out (notwithstanding the words "in daylight" in paragraph 15) of Section A-VIII/2 of STCW Code

(vi) Watch-keeping under different conditions and in different areas

(vii) Protection of the marine environment.

(b) Operational procedures for single-man watch-keeping are to be established to ensure that the bridge is manned at all times and that another qualified officer can attend the bridge within a specified response time.

9.3.3 Back-up navigator

(a) When single-man watch-keeping is applied, another fully qualified officer is to be appointed as back-up officer.

(b) Procedures are to be established which ensure that the back-up officer is able to hear alarm and communication calls from the bridge.

9.3.4 Response time

(a) The total response time from alarm is sounded to the appearance of the back-up officer on the bridge is to be set in relation to the time to danger of collision or grounding, taking into account all relevant factors necessary to allow proper and effective action to be taken.

(b) Based on the actual time to danger, calculation of the response time is to take into account the time lapsed in acknowledging the alarm, proceeding to the bridge, evaluating the situation and taking proper and effective action in due time to avoid danger.

9.3.5 Testing of equipment

Procedures are to be established for testing the watch monitoring and alarm transfer system.

9.3.6 Route planning

Procedures are to be established for route planning incorporating the use of parallel index and constant radius turn techniques.

9.3.7 Navigation in narrow waters

(a) Procedures are to be established for efficient visual monitoring of the automatic navigation and track-keeping as well as for the keeping of a proper look-out.

(b) Procedures for active monitoring of the ship's position in relation to the preplanned route by another method than that used by the automatic navigation system are to be established.

9.4 Operational Safety Standard

9.4.1 General

(a) The purpose of the operational safety standard is to regulate conditions that will affect the safety of watch-keeping and command, and to provide a useful aid for managing abnormal operating conditions and emergency situations.

(b) A manual which presents and describes procedures, routines, duties and responsibilities of relevant personnel for normal and abnormal operating conditions is to be developed and implemented on board the ship.

9.4.2 Operational safety manual

(a) Procedures and routines for normal operating conditions are to be established to reduce the probability of undesired and hazardous events to occur.

(b) Adequate contingency and emergency procedures are to be established to increase the ability to counteract and handle an abnormal operating situation.

(c) The operational safety manual is to cover the following conditions and situations:

(i) Normal conditions requiring daily routines and duties and situations which, to some degree, require precautionary procedures and/or action for a continued controlled operation.

(ii) Accident situations, i.e. casualties affecting course and speed, which do not represent imminent danger for the complement.

(iii) Abnormal situation arisen due to threats against the ship and/or her complement put forward by the environmental conditions.

(iv) Emergency situations, i.e. situations where the ship and/or her complement are threatened by a grave and imminent danger.

(v) Miscellaneous situations not covered by the previous items.

(d) The contents of the operational safety manual are to include the requirements of 9.1.2, 9.1.3 and 9.1.4 as well as the requirements of 9.2 and 9.3.

Chapter 10
Bridge Equipment Tests

10.1 General

10.1.1 Application

Ships requesting Class Notation **NAV0** or **NAV1** are to comply with the requirements in this chapter.

10.2 On-board Testing of Bridge Equipment

10.2.1 General

(a) After installation of equipment in ships requesting Class Notation **NAV0** or **NAV1**, on-board testing of the equipment is to be performed in order to ascertain that the equipment, as installed, operates satisfactory.

(b) It is to be noted that reliable figures for all aspects of equipment performance/accuracy cannot be established by the on-board testing required for classification.

Therefore, to ensure that equipment performance is in accordance with specifications, ship-owners are advised to choose equipment that is type approved.

10.2.2 Test program

(a) A detailed program for the on-board testing of this equipment is to be submitted for approval at the earliest possible stage before sea trials.

(b) The test program is to be in accordance with the requirements for on-board testing set forth in 10.2.3 to 10.2.14, and is to specify in detail the tests to be performed for each type of equipment.

10.2.3 General requirements for the testing of all types of bridge equipment

(a) Prior to testing, all equipment is to be checked and calibrated by a representative of the manufacturer or the equipment supplier.

(b) Prior to testing, all equipment, etc., necessary for the observation and recording of test results is to be made available. Charts for the area where the sea trials are to take place must be available. Large-scale charts for the area where the ship is berthed must be available.

(c) Equipment and systems are to be subject to the tests required to ascertain that all controls, indicators, displays, etc., operate in accordance with their specifications and meet Rule requirements.

(d) Failure conditions are to be simulated on equipment and systems.

(e) The instruments for performance of primary bridge functions are to be tested at black-out for a period of up to and over 30 seconds. At least one of the tests is to be carried out at sea.

(f) A demonstration including start-up of the individual systems and change-over from normal conditions to failure conditions is to be carried out.

(g) Tests, additional to the approved test program, may be required carried out by the Surveyor.

(h) If the ship is not assigned the additional Class Notation **CAU**, tests of the remote control system for propulsion machinery as well as black-out tests, are to be carried out.

10.2.4 Gyro compass

(a) The settle point error of the master compass and the alignment with the ship's centreline are to be determined. The true heading is to be taken to be the bearing (direction) of the quay at which the ship is berthed.

(b) The bearing repeaters' alignment with the ship's centre-line is to be checked. A bearing diopter must be available.

(c) The divergence between No. 1 master compass and the gyro repeaters is to be checked. After switching to No. 2 master compass, the divergence with the gyro repeaters is to be checked again.

(d) The monitoring functions of the compass system are to be tested.

(e) The performance of the gyro-compass system is to be tested.

(f) The means for correcting errors caused by speed and latitude are to be tested.

10.2.5 Automatic steering system

(a) The course-keeping performance of the autopilot is to be tested at full sea speed. Adaptive autopilots are also to be tested at reduced speed.

(b) The performance of the autopilot is to be checked for a change in course of 10 degrees and 90 degrees to both sides. The overshoot angle is to be observed.

(c) The off course alarm is to be tested.

(d) The rate-of-turn or radius function is to be tested.

(e) Change of operational steering mode is to be tested.

(f) The override function is to be tested in all steering modes.

10.2.6 Rudder indicator(s)

The rudder indicator(s) on the bridge is(are) to be checked against the indicator on the rudder stock.

10.2.7 Rate-of-turn indicator

The rate-of-turn indicator is to be tested by measuring the number of degrees turned in 60 seconds at a constant rate of turn.

10.2.8 Speed log

The speed log is to be checked for accuracy and, if necessary, calibrated.

10.2.9 Echo sounder

(a) Function testing of the echo sounder is to be carried out. Depth is to be measured at a fixed position for exact comparison of accuracy and at full speed ahead on all range scales available.

(b) The depth warning/alarm is to be tested.

10.2.10 Radar system

(a) Function testing of the radar is to be carried out. The various ranges, presentation modes and the basic radar functions are to be tested.

(b) The accuracy of bearing of the radars is to be tested by the reading of at least four fixed positions on the display at a known position of the ship.

(c) The accuracy of range measurement is to be tested by measuring the distance to at least two fixed positions at each range while the ship is in a known position.

(d) The "heading marker" is to be checked against a visible target dead ahead and adjusted if necessary.

(e) Failure mode by disconnecting a fuse is to be observed.

(f) Inter-switching facilities, including bypass function, are to be tested.

(g) Performance monitors are to be checked.

(h) Self-check programs are to be run.

10.2.11 ARPA system

(a) The equipment is to be function-tested whilst the ship keeps steady speed and course.

(b) When manoeuvring the ship, the normal functioning of the system, including automatic acquisition, is to be checked.

(c) Indication on the display of the bearing and distance to the object, as well as the heading of own ship, is to be tested.

(d) The trial manoeuvre function of the ARPA is to be tested.

(e) Tests are to be carried out to verify that the system gives warning when the limits of CPA and TCPA are exceed and that a warning is given when the object enters the guard ring.

(f) Input from speed sensors is to be checked.

10.2.12 Electronic position-fixing systems

(a) All electronic position-fixing fitted systems are to be function-tested.

(b) The accuracy of the electronic position-fixing systems is to be checked.

10.2.13 Watch monitoring and alarm transfer system

(a) The off-track monitoring system is to be tested. It is to be checked that the off-track alarm is transferred to the places specified if it is not acknowledged within the pre-set limit.

(b) The traffic-monitoring function of the ARPA (guard zones and CPA/TCPA) is to be tested. It is to be checked that the warning is transferred if not acknowledged within the pre-set limit.

(c) The watch monitoring (dead-man) alarm system is to be tested and the transfer of alarms checked.

(d) The off-heading monitoring system is to be tested. It is to be checked that the off-course alarm from the heading control system and compass deviation alarm from the compass monitor is transferred to the places specified if it is not acknowledged within the pre-set limit.

(e) It is to be checked that the wheel over point approach alarm from the ECDIS is transferred to the places specified if it is not acknowledged within the pre-set limit.

10.2.14 Internal communication systems

The automatic telephone system and internal communication system between workstations are to be tested. The priority function for the telephones in the wheel house and engine control room over the other extensions is to be tested.

10.2.15 Nautical communication system

VHF/UHF systems are to be tested.

10.2.16 Sound reception system

The sound reception system is to be tested by measuring the sound level outside and inside the wheelhouse.

10.2.17 Computer system(s)

(a) The tests can be combined with tests specified for the different primary functions. Failure conditions, especially power failure in the computer system as well as the computer equipment, are to be simulated as realistically as possible. Manual restart and, if relevant, automatic restart and automatic back-up are to be tested. Successive power breaks are to be simulated.

(b) If the computer system is used to carry out secondary functions, testing of the system is to be carried out with all primary functions in operation and with maximum load from both primary and secondary functions.

10.2.18 Electronic chart display and information system (ECDIS)

The accuracy, functionality and the alarm/warning functions of the electronic chart display system are to be tested. Performance of automatic functions, such as positioning of the ship by means of dead reckoning and GPS, plotting of the track and updating of the data base, is to be included in the tests together with the following operations:

(a) Route planning

(b) Altering of the route while underway

(c) Positioning by bearings and ranges

(d) Scale changes and zooming functions.

(e) Manual adjustment of the ship's position on the screen.

10.2.19 Automatic navigation and track-keeping system

The electronic chart display and information system is included in the testing of the automatic navigation and track-keeping system if such system is installed. The performance of the automatic track-keeping system, including alarm/warning functions, is to be tested along a preplanned route consisting of different courses. The route is to consist of at least six course changes and include a course change not less than 135° at minimum radius turn to each side as well as a turn of approximately 90° at a radius of not less than 2 nautical miles. The track keeping in a turn during essential speed reduction is to be tested. The alarm and warning functions of the track keeping system are to be tested. Failure conditions are to be simulated to verify conclusions of approved FMEA (Failure Mode & Effect Analysis).

10.2.20 Conning display

The performance of the conning display is to be tested as well as the accuracy and readability of the data displayed.

10.2.21 Bridge watch surveillance system

The functionality and time settings of the surveillance system shall be tested.

Tel: *+886 2 25062711*
Fax: *+886 2 25074722*
E-mail: *cr.tp@crclass.org*
Website: *http://www.crclass.org*
© CR – All rights reserved

財團法人驗船中心
CR CLASSIFICATION SOCIETY

RULES FOR THE CONSTRUCTION AND CLASSIFICATION OF STEEL SHIPS 2022

PART XIV – GOAL-BASED SHIP CONSTRUCTION STANDARDS SHIPS

July 2022

財團法人驗船中心
CR CLASSIFICATION SOCIETY

RULES FOR THE CONSTRUCTION AND CLASSIFICATION OF STEEL SHIPS 2022

PART XIV – GOAL-BASED SHIP CONSTRUCTION STANDARDS SHIPS

July 2022

RULES FOR THE CONSTRUCTION AND CLASSIFICATION OF STEEL SHIPS

PART I CLASSIFICATION AND SURVEY

PART II HULL CONSTRUCTION AND EQUIPMENT

PART III SPECIAL SERVICE AND TYPE OF SHIPS

PART IV MACHINERY INSTALLATIONS – CONSTRUCTION AND SHAFTING

PART V BOILERS, PRESSURE VESSELS, THERMAL OIL HEATERS AND INCINERATORS

PART VI PIPING AND PUMPING SYSTEMS

PART VII ELECTRICAL INSTALLATIONS

PART VIII AUTOMATIC OR REMOTE CONTROL AND MONITORING SYSTEMS

PART IX FIRE PROTECTION, DETECTION AND EXTINCTION

PART X REFRIGERATED CARGO INSTALLATIONS

PART XI MATERIALS

PART XII WELDING

PART XIII NAVIGATIONAL SAFETY SYSTEMS

PART XIV GOAL-BASED SHIP CONSTRUCTION STANDARDS SHIPS

PART XV HULL CONSTRUCTION AND EQUIPMENT FOR SHIPS LESS THAN 90 M IN LENGTH

List of major changes in Part XIV from 2019 edition

2.8	Amend No.1
2.8.2	Amend No.1
5.1.2	Amend No.1
5.2.4(b)	Amend No.1
5.3.1, 5.3.2	Amend No.1
6.1.2	Amend No.1
6.1.3	Amend No.1

Acronyms

AIS	Automatic Identification System
ANTS	Automatic Navigation and Track-keeping System
ARPA	Automatic Radar Plotting Aid
BC Code	Code of Safe Practice for Solid Bulk Cargoes
BNWAS	Bridge Navigational Watch Alarm System
CA	Controlled Atmosphere
CDI	Chemical Distribution Institute
COW	Crude Oil Washing
CPA	Closest Point of Approach
CPP	Controllable Pitch Propeller
CSC	International Convention for Safe Containers
CSR	Common Structural Rules
CTOD	Crack Tip Opening Displacement
ECDIS	Electronic Chart Display and Information System
EEBD	Emergency Escape Breathing Devices
ENC	Electronic Navigational Chart
ESP	Enhance Survey Plan
ETA	Emergency Towing Arrangement
FEU	Forty-foot Equivalent Unit
FMEA	Failure Mode & Effect Analysis
FRP, GRP	Fibreglass Reinforced Plastics
FTP Code	International Code for Application of Fire Test Procedures
GBS	Goal-Based ship construction Standards
GDC	General Dry Cargo
GLONASS	Global Navigation Satellite System
GMDSS	Global Maritime Distress and Safety System
GPS	Global Positioning System
HAZ	Heat Affected Zone
HHP anchor	High Holding Power anchor
HSC	High Speed Craft
HTS	High Tensile Steel
IACS	International Association of Classification Societies
IBC Code	International Code for the Construction and Equipment of Ships Carrying Dangerous Chemicals in Bulk

ICS	The International Chamber of Shipping
IEC	International Electrotechnical Commission
IGC Code	International Code for the Construction and Equipment of Ships Carrying Liquefied Gases in Bulk
ILO	International Labour Organization
IMDG Code	International Maritime Dangerous Goods Code
IMO	International Maritime Organization
ISO	International Standards Organization
LAN	Local Area Network
LCS	Loading Computer System
LEL	Lower Explosive Limit
LRIT	Long-range Identification and Tracking of ships
MARPOL	International Convention for the Prevention of Pollution from Ships
MARVS	Maximum Allowable Relief Valve Setting
MEPC	Marine Environment Protection Committee
MLC	Maritime Labour Convention
MSC	Maritime Safety Committee
NDT	Nondestructive Testing
OCIMF	The Oil Companies International Marine Forum
OOW	Officer Of the Watch
PA	Public Address
PMA	Permanent Means of Access
PMS	Planned Machinery Maintenance Scheme
RH	Relative Humidity
PSPC	Performance Standard for Protective Coating
SENC	System Electronic Navigational Chart
SHHP anchor	Super High Holding Power anchor
SOLAS	International Convention for the Safety of Life at Sea
SRE	Ship Recycling
STCW	International Convention on Standards of Training, Certification and Watch-keeping for Seafarers
STS operation	Ship-To-Ship operation
S-VDR	Simplified Voyage Data Recorder
TCPA	Time to CPA
TEU	Twenty-foot Equivalent Unit
THD	Total Harmonic Distortion

TMCP	Thermo-Mechanical Controlled Processing
UPS	Uninterruptible Power Supply
VDR	Voyage Data Recorder
VEC	Vapor Emission Control

RULES FOR THE CONSTRUCTION AND CLASSIFICATION OF STEEL SHIPS

PART XIV
GOAL-BASED SHIP CONSTRUCTION STANDARDS SHIPS

CONTENTS

Chapter 1 General 1

1.1 General 1
1.2 Definition 2
1.3 Design 2
1.4 Construction 2
1.5 In-service Considerations 2
1.6 Recycling Considerations 2

Chapter 2 Complements to CSR-H 3

2.1 General 3
2.2 Periodical Survey 3
2.3 Plan Approval Procedure 3
2.4 Design Temperature 3
2.5 Approval of Loading Instrument 3
2.6 Lifting Appliance 3
2.7 Material 3
2.8 Direct Loads Assessment 5
2.9 Hull Outfitting 5
2.10 Welding Procedures, Welding Consumables and Welders 5
2.11 Non-Destructive Examination (NDE) 6
2.12 Hatch Covers Supporting Containers 6
2.13 Watertight Door Fitted in the Pump Room for Access to the Duct Keel 6

Chapter 3 Human Element Considerations 7

3.1 General 7
3.2 Permanent Means of Access 7
3.3 Lighting 7
3.4 Ventilation 8
3.5 Noise and Vibration 8
3.6 Emergency Egress 9

Chapter 4 Design Transparency **10**

4.1 General 10
4.2 Ship Construction File (SCF) 10
4.3 Information Availability During Construction 11

Chapter 5 Construction Quality Procedures **16**

5.1 General 16
5.2 Construction Quality Procedures 16
5.3 Continual Improvement 17
5.4 Benchmark for Quality Construction Requirements 17

Chapter 6 Survey During Construction **18**

6.1 General 18
6.2 Construction Survey Procedures 18
6.3 Benchmark for Construction Survey Requirements 19

Chapter 7 Survey and Maintenance **20**

7.1 General 20
7.2 Facilitation for Survey and Maintenance 20

Chapter 8 Structural Accessibility **21**

8.1 General 21
8.2 Structural Accessibility 21

Chapter 9 Recycling **22**

9.1 General 22
9.2 Ship Recycling 22

Chapter 1
General

1.1 General

1.1.1 This Part is to apply to oil tankers of 150 m in length and above and to bulk carriers of 150 m in length and above, constructed with single deck, top-side tanks and hopper side tanks in cargo spaces, excluding ore carriers and combination carriers:

(a) for which the building contract is placed on or after 1 July 2016;

(b) in the absence of a building contract, the keels of which are laid or which are at a similar stage of construction on or after 1 July 2017; or

(c) the delivery of which is on or after 1 July 2020.

1.1.2 Ships are to be designed and constructed for a specified design life to be safe and environmentally friendly, when properly operated and maintained under the specified operating and environmental conditions, in intact and specified damage conditions, throughout their life.

(a) Safe and environmentally friendly means the ship is to have adequate strength, integrity and stability to minimize the risk of the loss of the ship or pollution to the marine environment due to structural failure, including collapse, resulting in flooding or the loss of watertight integrity.

(b) Environmentally friendly also includes the ship being constructed of materials for environmentally acceptable recycling.

(c) Safety also includes the ship's structure, fittings and arrangements providing for safe access, escape, inspection and proper maintenance and facilitating safe operation.

(d) Specified operating and environmental conditions are defined by the intended operating area for the ship throughout its life and cover the conditions, including intermediate conditions, arising from cargo and ballast operations in port, waterways and at sea.

(e) Specified design life is the nominal period that the ship is assumed to be exposed to operating and/or environmental conditions and/or the corrosive environment and is used for selecting appropriate ship design parameters. However, the ship's actual service life may be longer or shorter depending on the actual operating conditions and maintenance of the ship throughout its life cycle.

1.1.3 The requirements of 1.1.2 are to be achieved through satisfying applicable structural requirements of the Society, conforming to the functional requirements of the Goal-based Ship Construction Standards for Bulk Carriers and Oil Tankers.

1.1.4 A Ship Construction File with specific information on how the functional requirements of the Goal-based Ship Construction Standards for Bulk Carriers and Oil Tankers have been applied in the ship design and construction is to be provided upon delivery of a new ship, and kept on board the ship and/or ashore and updated as appropriate throughout the ship's service. The contents of the Ship Construction File are to, at least, conform to the guidelines developed by the IMO. Refer to the MSC.1/Circ.1343 for the information to be included in a Ship Construction File.

1.2 Definition

1.2.1 Goal-based Ship Construction Standards for Bulk Carriers and Oil Tankers (GBS) means the International Goal-Based Ship Construction Standards for Bulk Carriers and Oil Tankers, adopted by the Maritime Safety Committee by resolution MSC.287(87), as may be amended by the IMO, provided that such amendments are adopted, brought into force and take effect in accordance with the provisions of article VIII of the SOLAS Convention.

1.2.2 GBS ships mean the bulk carriers and oil tankers which are specified by 1.1.1, conforming to the GBS as defined in 1.2.1.

1.2.3 Harmonised Common Structural Rules(CSR-H) means the Common Structural Rules for Bulk Carriers and Oil tankers, as amended, developed and released by the IACS and adopted and implemented by the Society.

1.3 Design

1.3.1 The structural design of GBS ships is to be in accordance with the CSR-H, which mainly includes the functional requirements of design life, environmental conditions, structural strength, fatigue life, residual strength, protection against corrosion, structural redundancy and watertight and weathertight integrity. Where the structure and equipment, as well as the machinery and electrical installations, of the Ships are not regulated by the CSR-H, the relevant requirements of the Society's Rules are to be conformed.

1.3.2 The functional requirement of human element considerations is to be in accordance with Chapter 3 of this Part.

1.3.3 The functional requirement of design transparency is to be in accordance with Chapter 4 of this Part.

1.4 Construction

1.4.1 The functional requirement of construction quality procedures is to be in accordance with Chapter 5 of this Part.

1.4.2 The functional requirement of survey during construction is to be in accordance with Chapter 6 of this Part.

1.5 In-service Considerations

1.5.1 The functional requirement of survey and maintenance is to be in accordance with Chapter 7 of this Part.

1.5.2 The functional requirement of structural accessibility is to be in accordance with Chapter 8 of this Part.

1.6 Recycling Considerations

1.6.1 The functional requirement of recycling is to be in accordance with Chapter 9 of this Part.

Chapter 2
Complements to CSR-H

2.1 General

2.1.1 This Chapter includes the complementary requirements to the CSR-H.

2.2 Periodical Survey

2.2.1 The CSR-H defines the renewal criteria for the individual structural items. The structural requirements included are developed on the assumption that the structure is subject to appropriate monitoring by the ship owner and to periodical survey in accordance with Part I of the Rules.

2.3 Plan Approval Procedure

2.3.1 An appropriate term to indicate that the plans, reports or documents have been reviewed for compliance with the Rules is to be used according to the plan approval procedures of the Society.

2.4 Design Temperature

2.4.1 The CSR-H assumes that the structural assessment of hull strength members is valid for the following design temperatures:

(a) Lowest mean daily average temperature in air is -10°C.

(b) Lowest mean daily average temperature in seawater is 0°C.

Ships operating for long periods in areas with lower mean daily average temperature are subject to the requirements as specified in 1.5.5 of Part II of the Rules.

2.5 Approval of Loading Instrument

2.5.1 The loading instrument is subject to approval based on Appendix 1 of Part I of the Rules.

2.6 Lifting Appliance

2.6.1 The fixed parts of lifting appliances and their connections to the ship's structure is covered by the Rules for the Construction and Survey of Cargo Gear of this Society, and by the certification of lifting appliances when required.

2.6.2 The crane, derrick or lifting mast is to be certified in accordance with the Rules for the Construction and Survey of Cargo Gear of the Society.

2.7 Material

2.7.1 Standard of material

Materials used during construction are to comply with Part XI of the Rules.

2.7.2 Testing of material

Materials are to be tested in compliance with the applicable requirements of Part XI of the Rules.

2.7.3 Manufacturing process

The welding and other cold or hot manufacturing processes are to be carried out in compliance with current sound working practice defined in IACS UR W and the applicable requirements of Part XI and XII of the Rules.

2.7.4 Through thickness property

Where tee or cruciform connections employ partial or full penetration welds, and the plate material is subject to significant tensile strain in a direction perpendicular to the rolled surfaces, consideration is to be given tote use of special material with specified through thickness properties, in accordance with Chapter 3 of Part XI of the Rules. These steels are to be designated on the approved plan by the required steel strength grade followed by the letter Z (e.g. EH36Z).

2.7.5 Stainless steel

Stainless steels are considered by the Society on a case-by-case basis with the requirements of Chapter 9 of Part XI of the Rules.

2.7.6 Steels for forging and casting

(a) Mechanical and chemical properties of steels for forging and casting to be used for structural members are to comply with the applicable requirements of Part XI of the Rules.

(b) The steels used are to be tested in accordance with the applicable requirements of Part XI of the Rules.

(c) Rolled bars may be accepted in lieu of forged products, after consideration by the Society on a case-by-case basis. In such case, compliance with the applicable requirements of Part XI of the Rules, relevant to the quality and testing of rolled parts accepted in lieu of forged parts, may be required.

(d) Cast parts intended for stems and stern frames in general may be made of C and C-Mn weldable steels, having specified minimum tensile strength, R_m = 400 N/mm^2, in accordance with the applicable requirements of Part XI of the Rules.

2.7.7 Aluminium alloy

Material requirements and scantlings are to comply with Part XI of the Rules.

2.7.8 Other material and product

Other materials and products such as parts made of iron castings, where allowed, products made of copper and copper alloys, rivets, anchors, chain cables, cranes, masts, derrick posts, derricks, accessories and wire ropes are to comply with the applicable requirements of Part XI of the Rules.

2.7.9 Material for small hatch cover

Materials used for the construction of small steel hatch covers are to comply with the applicable requirements of Part XI of the Rules.

2.7.10 Material for cargo hatch cover

Materials used for the construction of cargo steel hatch covers for bulk carriers are to comply with the applicable requirements of Part XI of the Rules.

2.7.11 The corrosion additions for materials other than carbon-manganese steels, stainless steels, stainless clad steels and aluminium alloys, which are used as ship structural members, are to be considered by the Society on a case-by-case basis.

2.8 Direct Loads Assessment

2.8.1 The sloshing pressures defined in the CSR-H does not include the effect of impact pressures due to high velocity impacts with tank boundaries or internal structures. For tanks with a maximum effective sloshing breadth, b_{slh}, greater than 0.56 B or a maximum effective sloshing length, l_{slh}, greater than 0.13 L at any filling level from 0.05 h_{max} to 0.95 h_{max}, a separate impact assessment is to be carried out in accordance with Chapter 33 of Part II of the Rules. See CSR-H Part 1 Ch.4 Sec.6 for the definitions of the above-mentioned symbol.

2.8.2 Seakeeping design motions and loads assessment for hull forms outside the limits specified in CSR-H Part 1 Ch. 1 Sec. 2 [3] and Sec. 3 [6.2], CR Internal Guidance IG-RES-XIV-002 is to be applied for seakeeping motions and loads assessment.

2.9 Hull Outfitting

2.9.1 Testing for anchors and chain cables

All anchors and chain cables are to be tested at establishments and on machines recognized by the Society, under the supervision of surveyors or other representatives of the Society and in accordance with the relevant requirements of Chapter 12 and 13 of Part XI of the Rules.

2.9.2 High and Super High Holding power anchors

High Holding Power (HHP) and Super High Holding Power (SHHP) anchors, if any, are to be approved according to the applicable requirements of Chapter 12 of Part XI of the Rules.

2.9.3 Chain cables

The characteristics of the steel used and the method of manufacture of chain cables are to be approved by the Society for each manufacturer. The material from which chain cables are manufactured and the completed chain cables themselves are to be tested in accordance with the applicable requirements of Chapter 13 of Part XI of the Rules.

2.9.4 Windlass

A windlass of sufficient power and suitable for the size of chain is to be fitted to the ship in accordance with the requirements of Chapter 4 of Part IV of the Rules. Where an owner requires equipment significantly in excess of the Rule requirements, it is the owner's responsibility to specify increased windlass power.

2.10 Welding Procedures, Welding Consumables and Welders

2.10.1 All welding is to be carried out by approved welders, in accordance with approved welding procedures, using approved welding consumables, in compliance with Part XII of the Rules. Personnel manning automatic welding machines and equipment are to be competent, sufficiently trained and certified by the Society as specified in Part XII of the Rules.

2.10.2 Preparation, execution and inspection

The welding requirements of CSR-H are to be complemented by the general requirements relevant to fabrication by welding and qualification of welding procedures given by Part XII of the Rules when deemed appropriate by the Society.

2.11 Non-Destructive Examination (NDE)

2.11.1 The NDE plan to be submitted for approval has to contain the necessary data relevant to the locations and number of examinations, welding procedures applied, method of NDE applied, etc. Visual inspection of finished welds is to be carried out by the yard to ensure that all welding has been satisfactory completed. In addition to visual inspection, welded joints are to be examined using any one or a combination of ultrasonic, radiographic, magnetic particle, eddy current, dye penetrant or other acceptable methods appropriate to the configuration of the weld. Above inspections are to be carried out as per the requirements of the relevant Parts of the Rules.

2.11.2 NDE of welding is to be carried out at the positions indicated by the NDE plan in order to ensure that the welds are free from cracks and unacceptable internal defects with regards to the requirements of the relevant Parts of the Rules. NDE is to be carried out by qualified personnel certified by recognized bodies in compliance with recognized standards.

2.12 Hatch Covers Supporting Containers

2.12.1 The scantlings of hatch covers supporting containers are to comply with the applicable requirements of Chapter 17 of Part II of the Rules.

2.12.2 In the case of carriage of containers on the hatch covers, the concentrated forces under the containers corners are to be determined in accordance with the applicable requirements of Chapter 17 of Part II of the Rules.

2.13 Watertight Door Fitted in the Pump Room for Access to the Duct Keel

2.13.1 Where a watertight door is fitted in the pump room for access to the duct keel, the scantlings of the watertight door are to comply with the requirements of 14.3 of Part II of the Rules and the following additional requirements:

(a) The watertight door is to be capable of being manually closed from outside the main pump room entrance, in addition to bridge operation. A means of indicating whether the door is open or closed is to be provided locally and on the bridge.

(b) A notice is to be affixed at each operating position to the effect that the watertight door is to be kept closed during normal operations of the ship, except when access to the pipe tunnel is required.

Chapter 3

Human Element Considerations

3.1 General

3.1.1 Ship's structures and fittings are to be designed and arranged using ergonomic principles to ensure safety during operations, inspection and maintenance. These considerations are to include, but not be limited to, stairs, vertical ladders, ramps, walkways and standing platforms used for means of access, the work environment, inspection and maintenance and the facilitation of operation.

3.1.2 In addition to those required by this Chapter, all relevant IMO requirements on the human element considerations are to be complied with.

3.1.3 Where ILO MLC Title 3 Standard A3.1 is required in this Chapter for lighting, ventilation, noise and vibration, reference can be made to IACS/Rev.0 2013 "MLC, 2006."

3.2 Permanent Means of Access

3.2.1 Stairs, vertical ladders, ramps, walkways and work platforms used for permanent means of access and/or for inspection and maintenance operations are to comply with the following provisions.

(a) Chapter 13 and 28 of Part II of the Rules.

(b) All relevant provisions of Part VII and IX of the Rules.

(c) CSR-H Part 1 Ch. 2 Sec. 4.

(d) CSR-H Part 1 Ch. 11 Sec. 5 [1.4] to [1.5].

(e) CSR-H Part 2 Ch. 2 Sec. 1 [4].

(f) SOLAS Ch.II-1 Reg.3-3: Safe access to tanker bows.

(g) SOLAS Ch.II-1 Reg.3-6: Access to and within spaces in, and forward of, the cargo area of oil tanker sand bulk carriers.

(h) MSC.133(76): Technical provisions for means of access for inspections.

(i) IACS UI SC 191.

(j) IACS Rec. 132.

3.3 Lighting

3.3.1 The lighting requirements are to comply with the following provisions.

(a) Part VII of the Rules.

(b) 3.1.5 of Part XIII of the Rules.

(c) ILO MLC Title 3 Standard A3.1.

(d) IACS Rec. 132.

3.4 Ventilation

3.4.1 The ventilation requirements are to comply with the following provisions.

(a) Part VII and IX of the Rules.

(b) 3.1.7 of Part XIII of the Rules.

(c) CSR-H Part 2 Ch. 2 Sec. 1 [4.1.1].

(d) SOLAS Ch.II-1 Reg.35: Ventilating systems in machinery spaces.

(e) ILO MLC Title 3 Standard A3.1.

(f) IACS Rec. 132.

3.5 Noise and Vibration

3.5.1 The noise and vibration requirements are to comply with the following provisions:

(a) 1.6.11 of Part IV of the Rules: Protection against noise.

(b) Part IV of the Rules for any machinery vibration minimization.

(c) 3.1.3 and 3.1.4 of Part XIII of the Rules.

(d) CSR-H Part 1 Ch. 2 Sec. 10 [3.1.1].

(e) SOLAS Ch.II-1 Reg.3-12: Protection against noise.

(f) MSC.337(91): Code on Noise Levels on Board Ships.

(g) ILO MLC Title 3 Standard A3.1.

(h) IACS Rec. 132.

3.6 Emergency Egress

3.6.1 The emergency egress requirements are to comply with the following provisions:

(a) 19.5.3, 19.5.10 and 27.1.3 of Part II of the Rules.

(b) 7.10.3(b) of Part VIII of the Rules.

(c) 10.2 and all relevant provisions of Part IX of the Rules.

(d) SOLAS Ch.II-2 Reg.13: Means of Escape.

(e) IACS Rec. 132.

Chapter 4

Design Transparency

4.1 General

4.1.1 Ships are to be designed under a reliable, controlled and transparent process made accessible to the extent necessary to confirm the safety of the new as-built ship, with due consideration to intellectual property rights. Readily available documentation is to include the main goal-based parameters and all relevant design parameters that may limit the operation of the ship.

4.2 Ship Construction File (SCF)

4.2.1 A Ship Construction File with specific information on how the functional requirements of the Goal-based Ship Construction Standards for Bulk Carriers and Oil Tankers have been applied in the ship design and construction is to be provided upon delivery of a new ship, and kept on board the ship and/or ashore and updated as appropriate throughout the ship's service.

4.2.2 Scope of information

(a) The SCF is to include the list of documents constituting the SCF and all information listed in Table XIV 4-1, which is required for a ship's safe operation, maintenance, survey, repair and in emergency situations. Details of specific information that is not considered to be critical to safety might be included directly or by reference to other documents.

(b) When developing a SCF, the contents are to, at least, conform to MSC.1/Circ.1343, as shown in Table XIV 4-1. All of the columns in Table XIV 4-1 are to be reviewed to ensure that all necessary information has been provided. "Tier II items" in the Table mean the functional requirements included in the International Goal-based Ship Construction Standards for Bulk Carriers and Oil Tankers, adopted by resolution MSC 287(87).

(c) Any alternatives to the Rules, including structural details and equivalency calculations, are to be provided by the designer and to be included in the SCF.

(d) "As built" drawings and information which are verified to incorporate all alterations approved by the Society or flag State during the construction process are to be included in the SCF.

4.2.3 Availability and storage

The SCF is to remain with the ship and, in addition, be available to the Society, Owner and flag State throughout the ship's life. Where information not considered necessary to be onboard is stored ashore, procedures to access this information are to be specified in the on board SCF. The intellectual property provisions within the SCF are to be duly complied with.

4.2.4 Updates

(a) The SCF is to be updated throughout the ship's life at any major event, including, but not limited to, substantial repair and conversion, or any modification to the ship structure.

(b) It is the responsibility of the ship owner to inform the Society of any major event.

(c) The Society is to inform the shore archive about the updates, if necessary.

4.2.5 In addition to the requirements of 4.2.1 to 4.2.4, the requirements of the IACS UR Z23/10 "Ship Construction File" are to be conformed.

4.3 Information Availability During Construction

All relevant design and construction information, including correspondence exchanged between shipyard and this Society, e.g., on net scantlings, corrosion margins used, etc., is available to Owner and flag State upon request during the construction process.

Table XIV 4-1
List of Information to be Included in the Ship Construction File (SCF)

Tier II items		Information to be included	Further explanation of the content	Example documents	Normal storage location
DESIGN					
1	Design life	• assumed design life in years	• statement or note on midship section	• SCF-specific • midship section	on board ship on board ship
2	Environmental conditions	• assumed environmental conditions	• statement referencing data source or Rule (specific rule and data) or; • in accordance with Rule (date and revision)	• SCF-specific	on board ship
3	Structural strength				
3.1	General design	• applied Rule (date and revision) • applied alternative to Rule	• applied design method alternative to Rule and subject structure(s)	• SCF-specific • capacity plan	on board ship on board ship
3.2	Deformation and failure modes	• calculating conditions and results; • assumed loading conditions	• allowable loading pattern • maximum allowable hull girder bending moment and shear force	• loading manual • trim and stability booklet	on board ship on board ship
3.3	Ultimate strength	• operational restrictions due to structural strength	• maximum allowable cargo density or storage factor	• loading instrument instruction manual • operation and maintenance manuals	on board ship on board ship
3.4	Safety margins	• strength calculation results • gross hull girder section modulus • minimum hull girder section modulus along the length of the ship to be maintained throughout the ship's	• bulky output of strength calculation • plan showing highly stressed areas prone to yielding and/or buckling	• strength calculation • areas prone to yielding and/or buckling • general arrangement	on shore archive on board ship on board ship

		life • gross scantlings of structural constituent parts • net scantlings of structural constituent parts • hull form	• structural drawings • rudder and stern frame • structural details of typical members • hull form information indicated in key construction plans • hull form data stored within an onboard computer necessary for trim and stability and longitudinal strength calculations	• key construction plans • rudder and rudder stock • structural details • yard plans • dangerous area plan • lines plan or equivalent	on board ship on board ship on board ship on shore archive on board ship on shore archive on board ship
4	Fatigue life	• applied Rule (date and revision) • applied alternative to Rule • calculating conditions and results; • assumed loading conditions • fatigue life calculation results	• applied design method alternative to Rule and subject structure(s) • assumed loading conditions and rates • bulky output of fatigue life calculation • plan showing areas prone to fatigue	• SCF-specific • structural details • fatigue life calculation • areas prone to fatigue	on board ship on board ship on shore archive on board ship
5	Residual strength	• applied Rule (date and revision)		• SCF-specific	on board ship
6	Protection against corrosion				
6.1 6.2	Coating life Corrosion addition	• coated areas and target coating life and other measures for corrosion protection in holds, cargo and ballast tanks, other structure-integrated deep tanks and void spaces • specification for coating and other measures for corrosion protection in holds, cargo and ballast tanks, other structure-integrated deep tanks and void spaces • gross scantlings of structural constituent parts • net scantlings of structural constituent parts	• plans showing areas prone to excessive corrosion	• SCF-specific • Coating Technical File required by PSPC • areas prone to excessive corrosion • key construction plans	on board ship on board ship on board ship on board ship
7	Structural	• applied Rule (date		• SCF-specific	on board ship

	redundancy	and revision)			
8	Watertight and weathertight integrity	• applied Rule (date and revision) • key factors for watertight and weathertight integrity	• details of equipment forming part of the watertight and weathertight integrity	• SCF-specific • structural details of hatch covers, doors and other closings integral with the shell and bulkheads	on board ship on board ship
9	Human element considerations	• list of ergonomic design principles applied to ship structure design to enhance safety during operations, inspections and maintenance of ship		• SCF-specific	on board ship
10	Design transparency	• applied Rule (date and revision) • applicable industry standards for design transparency and IP protection • reference to part of SCF information kept ashore		• intellectual property provisions • summary, location and access procedure for part of SCF information onshore	on board ship on board ship
CONSTRUCTION					
11	Construction quality procedures	• applied construction quality standard	• recognized national or international construction quality standard	• SCF-specific	on board ship
12	Survey during construction	• survey regime applied during construction (to include all owner and class scheduled inspections during construction) • information on non-destructive examination	• applied Rules (date and revision) • copies of certificates of forgings and castings welded into the hull	• SCF-specific • tank testing plan • non-destructive testing plan • Coating Technical File required by PSPC	on board ship on board ship on board ship on board ship
IN-SERVICE CONSIDERATIONS					
13	Survey and maintenance	• maintenance plans specific to the structure of the ship where higher attention is called for • preparations for survey	• plan showing highly stressed areas prone to yielding, buckling, fatigue and/or excessive Corrosion • arrangement and details of all penetrations normally examined at dry-docking	• SCF-specific • operation and maintenance manuals (e.g., hatch covers and doors) • docking plan	on board ship on board ship on board ship

		• gross hull girder section modulus • minimum hull girder section modulus along the length of the ship to be maintained throughout the ship's life • gross scantlings of structural constituent parts • net scantlings of structural constituent parts • hull form	• details for dry-docking • details for in-water survey • hull form information indicated in key construction plans	• dangerous area plan • Ship Structure Access Manual • Means of access to other structure-integrated deep tanks • Coating Technical File required by PSPC • key construction plans • rudder and rudder stock • structural details • yard plans • lines plan or equivalent	on board ship on board ship on board ship on board ship onboard ship on board ship on board ship on shore archive on shore archive on board ship
14	Structural accessibility	• means of access to holds, cargo and ballast tanks and other structure-integrated deep tanks	• plans showing arrangement and details of means of access	• Ship Structure Access Manual • means of access to other structure-integrated deep tanks	onboard ship on board ship
RECYCLING CONSIDERATIONS					
15	Recycling	• identification of all materials that were used in construction and may need special handling due to environmental and safety concerns	• list of materials used for the construction of the hull structure	• SCF-specific	on board ship

Notes:

(1) "SCF-specific" means documents to be developed especially to meet the requirements of 4.2 of this Chapter.

(2) "Key construction plans" means plans such as midship section, main O.T. and W.T. transverse bulkheads, construction profiles/plans, shell expansions, forward and aft sections in cargo tank (or hold) region, engine-room construction, forward construction and stern construction drawings.

(3) "Yard plans" means a full set of structural drawings, which include scantling information of all structural members.

(4) "Hull form" means a graphical or numerical representation of the geometry of the hull. Examples would include the graphical description provided by a lines plan and the numerical description provided by the hull form data stored within an onboard computer.

(5) "Lines plan" means a special drawing which is dedicated to show the entire hull form of a ship.

(6)	"Equivalent (to Lines plan)" means a set of information of hull form to be indicated in key construction plans for SCF purposes. Sufficient information is to be included in the drawings to provide the geometric definition to facilitate the repair of any part of the hull structure.
(7)	"Normal storage location" means a standard location where each SCF information item is to be stored. However, those items listed as being on board in the table above are to be on board as a minimum to ensure that they are transferred with the ship on a change of owner.
(8)	"Shore archive" is to be operated in accordance with applicable international standards.

Chapter 5
Construction Quality Procedures

5.1 General

5.1.1 Ships are to be built in accordance with controlled and transparent quality production standards with due regard to intellectual property rights. The ship construction quality procedures are to include, but not be limited to, specifications for material, manufacturing, alignment, assembling, joining and welding procedures, surface preparation and coating.

5.1.2 IACS Rec.47 Part A is to be applied as the minimum standard for hull new construction activities. Where the Builder/Fabricator proposes to use national and/or local standards, these are to be confirmed equivalent to, or of a higher standard than Rec.47 Part A accordingly to the procedure provided in IACS UR Z23.

5.2 Construction Quality Procedures

5.2.1 Kick-off Meeting

(a) Prior to commencement of surveys for any new building project, a kick-off meeting is to be held.

(b) The following procedures and/or documents are to be specially addressed and to be submitted to the surveyor for review.
   (i) Procedures for specifying the materials and their tracking.
   (ii) Assembly requirements, including alignment, joining, welding, surface preparation, coating, castings, heat treatment, etc.
   (iii) Approved scheme of welding procedures.
   (iv) List of qualified welders.
   (v) Requirements for assembly, erection and other quality control inspections.

(c) The detailed requirements of a kick-off meeting are to be in accordance with the IACS UR Z23/7 "New building survey planning".

5.2.2 The construction facility is to be reviewed by the surveyor according to the IACS UR Z23/6 "Review of the construction facility".

5.2.3 When a shipyard is determined as not meeting the minimum level of quality construction, the surveyor may issue a Corrective Action Request (CAR) and suspend the inspections. The Society will then dispatch a senior surveyor for further communication and evaluation. If the minimum level of quality construction still cannot be reached, the Society may inform the Owner and/or flag State with a letter of the decision to cancel the contract of the new shipbuilding.

5.2.4 Procedures followed when the "as built" is different than "design"

(a) When the dimension and the grade of materials are changed, the relevant "as built" drawings are to be submitted for review. Nevertheless, in the situations of increasing in the scantling or the material grade deemed satisfactory by the surveyor, the review may be waived.

(b) The review includes the re-evaluation of the strength and/or fatigue life for both net and gross scantlings where found necessary according to IACS Rec. 165.

5.2.5 The shipbuilder is to submit the precision measurement record to the surveyor, and the surveyor may randomly monitor these measurement and record for the sake of ensuring that construction tolerances are verified and maintained.

5.3 Continual Improvement

5.3.1 When any deviation occurs during implementation of the construction quality procedures, the experience is to be fed back by the shipbuilder, the owner or the surveyor for possible rule improvement. Actions are to be taken according to the internal procedure of Quality Manual of the Society.

5.3.2 Major experience from new construction and in-service is to be fed back by the shipbuilder, the owner or the Surveyor to update the Rules according to the internal procedure of Quality Manual of the Society.

5.4 Benchmark for Quality Construction Requirements

5.4.1 To verify that the quality construction requirements have been benchmarked with recognized international shipbuilding and repair quality standards, the site surveyor is to monitor all the QA and/or QC records randomly and record them in the inspection records, and a senior surveyor is to monitor the site surveyor according to the monitoring procedure of Quality Manual of the Society.

Chapter 6

Survey During Construction

6.1 General

6.1.1 A survey plan is to be developed for the construction phase of the ship, taking into account the ship type and design. The survey plan is to contain a set of requirements, including specifying the extent and scope of the construction survey(s) and identifying areas that need special attention during the survey(s), to ensure compliance of construction with mandatory ship construction standards.

6.1.2 The shipbuilder is to submit a construction survey plan to the surveyor during the initial kick-off meeting for review. The surveyor is to carry out inspections according to the plan in order to meet the minimum construction quality level as provided in 5.1.2.

6.2 Construction Survey Procedures

6.2.1 The following items are to be included in the construction survey plan.

(a) Types of surveys (visual, non-destructive examination, etc.) depending on location, materials, welding, casting, coatings, etc.

(b) Establishment of a construction survey schedule for all assembly stages from the kick-off meeting, through all major construction phases, up to delivery.

(c) Inspection/survey plan, including provisions for critical areas, with high stress or fatigue risk, identified during design approval with adequate detail and extent.

(d) Survey criteria for acceptance.

(e) Interaction with shipyard, including notification and documentation of survey results.

(f) Correction procedures to remedy construction defects.

(g) List of items that would require scheduling or formal surveys.

(h) Determination and documentation of areas that need special attention throughout ship's life, including criteria used in making the determination.

6.2.2 Test requirements and acceptance criteria are to be determined according to the Rules or recognized industrial standards and to be submitted to the Society for approval.

6.2.3 The qualification of surveyors is to be determined according to the internal procedure of Quality Manual of the Society.

6.2.4 The number of qualified surveyors for a project is to be determined under the interaction with the shipbuilder. However, the shipbuilder is responsible for scheduling all survey items in a one-by-one and reasonable manner as far as possible.

6.2.5 Delivery of survey results

Survey results with Corrective Action Request (CAR), if any, are to be returned to the shipbuilder upon the completion of the survey(s). Survey applications, survey results, CARs, and correspondence between shipyard and the Society are to be available to the ship owner and flag Administration for review upon request.

6.3 Benchmark for Construction Survey Requirements

6.3.1 To verify that the construction survey requirements have been benchmarked with recognized international shipbuilding and repair quality standards, the site surveyor is to confirm that all survey items are completed satisfactorily and is to review the QA/QC records by randomly monitoring.

Chapter 7
Survey and Maintenance

7.1 General

7.1.1 Ships are to be designed and constructed to facilitate ease of survey and maintenance, in particular avoiding the creation of spaces too confined to allow for adequate survey and maintenance activities. Areas are to be identified that need special attention during surveys throughout the ship's life. In particular, this is to include all necessary in-service survey and maintenance that was assumed when selecting ship design parameters.

7.2 Facilitation for Survey and Maintenance

7.2.1 In order to provide for spaces of adequate size to facilitate ship survey and maintenance, Chapter 8 of this Part is to be conformed.

7.2.2 In order to facilitate in-service survey, the in-service Survey Plan including following information are to be submitted for approval.

(a) Areas of high stress and with special fatigue considerations.

(b) Any other areas that need special attention throughout the ship's life, including criteria used in making the determination (e.g., wave impact loading, mechanical impact areas, special materials, etc.).

(c) Structural design features that were selected on the basis of special in-service requirements.

Chapter 8
Structural Accessibility

8.1 General

8.1.1 The ship is to be designed, constructed and equipped to provide adequate means of access to all internal structures to facilitate overall and close-up inspections and thickness measurements.

8.1.2 In addition to those required by this Chapter, all relevant IMO requirements on the structural accessibility are to be complied with.

8.2 Structural Accessibility

8.2.1 In order to facilitate overall and close-up inspections and thickness measurements of the internal structure, the following provisions are to be conformed.

(a) Chapter 28 of Part II of the Rules (Means of Access).

(b) CSR-H Part 1 Ch. 2 Sec. 4.

(c) CSR-H Part 1 Ch. 11 Sec. 5 [1.4] to [1.5].

(d) CSR-H Part 2 Ch. 2 Sec. 1 [4].

(e) SOLAS Ch.II-1 Reg.3-6: Access to and within spaces in, and forward of, the cargo area of oil tankers and bulk carriers.

(f) MSC.133(76): Technical provisions for means of access for inspections.

(g) IACS UI SC 191.

8.2.2 An Access Plan in compliance with 28.2.6 of Part II of the Rules is to be developed and submitted for approval. Special attention is to be paid for that the safe access to critical areas listed in 7.2.2 of this Part is to be included.

Chapter 9
Recycling

9.1 General

9.1.1 Ships are to be designed and constructed of materials for environmentally acceptable recycling without compromising the safety and operational efficiency of the ship.

9.1.2 The ship recycling requirements in 9.2 are currently recommendatory and will take effect upon entry into force of the Hong Kong International Convention for the Safe and Environmentally Sound Recycling of Ship, 2009 (the Hong Kong Convention).

9.2 Ship Recycling

9.2.1 For GBS ships, the provisions related to hull structure materials in Chapter 31 (Ship Recycling) of Part II of the Rules are deemed as mandatory.

9.2.2 List of materials used for the construction of the hull structure

(a) A list of hazardous materials is to be developed in accordance with the hull-structure-related items of 31.2(b) of Part II of the Rules. A fully-developed Inventory of Hazardous Materials (IHM), including all the items of 31.2(b) of Part II, is accepted as well and recommendable.

(b) For those materials not belong to the Hazardous Materials, see the relevant documents listed in CSR-H Part I Ch. 1 Sec. 3 [2] for the extents and locations of each material.

9.2.3 The list of materials is to be a part of the Ship Construction File. See 4.2 of this Part and MSC.1/Circ.1343 for the requirements.

9.2.4 Documenting changes to any of the above during the ship's service life are to be in accordance with the requirements of 31.5.4 and 31.5.5 of Part II of the Rules and to update the Ship Construction File in accordance with 4.2.5 of this Part.

Tel: *+886 2 25062711*
Fax: *+886 2 25074722*
E-mail: *cr.tp@crclass.org*
Website: *http://www.crclass.org*
© CR – All rights reserved

財團法人驗船中心
CR CLASSIFICATION SOCIETY

RULES FOR THE CONSTRUCTION AND CLASSIFICATION OF STEEL SHIPS 2022

PART XV – HULL CONSTRUCTION AND EQUIPMENT FOR SHIPS LESS THAN 90 M IN LENGTH

July 2022

財團法人驗船中心
CR CLASSIFICATION SOCIETY

RULES FOR THE CONSTRUCTION AND CLASSIFICATION OF STEEL SHIPS 2022

PART XV – HULL CONSTRUCTION AND EQUIPMENT FOR SHIPS LESS THAN 90 M IN LENGTH

July 2022

RULES FOR THE CONSTRUCTION AND CLASSIFICATION OF STEEL SHIPS

PART I CLASSIFICATION AND SURVEY

PART II HULL CONSTRUCTION AND EQUIPMENT

PART III SPECIAL SERVICE AND TYPE OF SHIPS

PART IV MACHINERY INSTALLATIONS – CONSTRUCTION AND SHAFTING

PART V BOILERS, PRESSURE VESSELS, THERMAL OIL HEATERS AND INCINERATORS

PART VI PIPING AND PUMPING SYSTEMS

PART VII ELECTRICAL INSTALLATIONS

PART VIII AUTOMATIC OR REMOTE CONTROL AND MONITORING SYSTEMS

PART IX FIRE PROTECTION, DETECTION AND EXTINCTION

PART X REFRIGERATED CARGO INSTALLATIONS

PART XI MATERIALS

PART XII WELDING

PART XIII NAVIGATIONAL SAFETY SYSTEMS

PART XIV GOAL-BASED SHIP CONSTRUCTION STANDARDS SHIPS

PART XV HULL CONSTRUCTION AND EQUIPMENT FOR SHIPS LESS THAN 90 M IN LENGTH

List of major changes in Part XV from 2019 edition

13.4	Amend No.2	Fig. XV 24-11	Amend No.2
14.3.3(d)	Amend No.2	24.12.9	Amend No.2
24.1.4	Amend No.2	24.12.10~13	Amend No.2
24.1.5~6	Amend No.2	Fig. XV 24-12	Amend No.2
24.11.7	Amend No.2	25.4.2	Amend No.2
24.12.1	Amend No.2		
24.12.2	Amend No.2		
24.12.4	Amend No.2		

Acronyms

AIS	Automatic Identification System
ANTS	Automatic Navigation and Track-keeping System
ARPA	Automatic Radar Plotting Aid
BC Code	Code of Safe Practice for Solid Bulk Cargoes
BNWAS	Bridge Navigational Watch Alarm System
CA	Controlled Atmosphere
CDI	Chemical Distribution Institute
COW	Crude Oil Washing
CPA	Closest Point of Approach
CPP	Controllable Pitch Propeller
CSC	International Convention for Safe Containers
CSR	Common Structural Rules
CTOD	Crack Tip Opening Displacement
ECDIS	Electronic Chart Display and Information System
EEBD	Emergency Escape Breathing Devices
ENC	Electronic Navigational Chart
ESP	Enhance Survey Plan
ETA	Emergency Towing Arrangement
FEU	Forty-foot Equivalent Unit
FMEA	Failure Mode & Effect Analysis
FRP, GRP	Fibreglass Reinforced Plastics
FTP Code	International Code for Application of Fire Test Procedures
GBS	Goal-Based ship construction Standards
GDC	General Dry Cargo
GLONASS	Global Navigation Satellite System
GMDSS	Global Maritime Distress and Safety System
GPS	Global Positioning System
HAZ	Heat Affected Zone

HHP anchor	High Holding Power anchor
HSC	High Speed Craft
HTS	High Tensile Steel
IACS	International Association of Classification Societies
IBC Code	International Code for the Construction and Equipment of Ships Carrying Dangerous Chemicals in Bulk
ICS	The International Chamber of Shipping
IEC	International Electrotechnical Commission
IGC Code	International Code for the Construction and Equipment of Ships Carrying Liquefied Gases in Bulk
ILO	International Labour Organization
IMDG Code	International Maritime Dangerous Goods Code
IMO	International Maritime Organization
ISO	International Standards Organization
LAN	Local Area Network
LCS	Loading Computer System
LEL	Lower Explosive Limit
LRIT	Long-range Identification and Tracking of ships
MARPOL	International Convention for the Prevention of Pollution from Ships
MARVS	Maximum Allowable Relief Valve Setting
MEPC	Marine Environment Protection Committee
MLC	Maritime Labour Convention
MSC	Maritime Safety Committee
NDT	Nondestructive Testing
OCIMF	The Oil Companies International Marine Forum
OOW	Officer Of the Watch
PA	Public Address
PMA	Permanent Means of Access
PMS	Planned Machinery Maintenance Scheme
RH	Relative Humidity

PSPC	Performance Standard for Protective Coating
SENC	System Electronic Navigational Chart
SHHP anchor	Super High Holding Power anchor
SOLAS	International Convention for the Safety of Life at Sea
SRE	Ship Recycling
STCW	International Convention on Standards of Training, Certification and Watch-keeping for Seafarers
STS operation	Ship-To-Ship operation
S-VDR	Simplified Voyage Data Recorder
TCPA	Time to CPA
TEU	Twenty-foot Equivalent Unit
THD	Total Harmonic Distortion
TMCP	Thermo-Mechanical Controlled Processing
UPS	Uninterruptible Power Supply
VDR	Voyage Data Recorder
VEC	Vapor Emission Control

RULES FOR THE CONSTRUCTION AND CLASSIFICATION OF STEEL SHIPS

PART XV
HULL CONSTRUCTION AND EQUIPMENT FOR SHIPS LESS THAN 90 M IN LENGTH

CONTENTS

Chapter 1 General 1

1.1 Application and Equivalency 1
1.2 Stability 2
1.3 Fire Protection 2
1.4 Materials, Scantlings and End Connections 2
1.5 Definitions 9

Chapter 2 Stems and Stern Frames 12

2.1 Stems 12
2.2 Stern Frames 12

Chapter 3 Longitudinal Strength 16

3.1 General 16
3.2 Bending Strength 16
3.3 Buckling Strength 18

Chapter 4 Single Bottoms 19

4.1 Floors 19
4.2 Center Girders 20
4.3 Side Girders 21
4.4 Strengthening of Bottom Forward 22
4.5 Longitudinals 22

Chapter 5 Double Bottoms **23**

5.1 General 23
5.2 Center Girders 24
5.3 Side Girders 25
5.4 Solid Floors 25
5.5 Open Floors 26
5.6 Longitudinal Framing in Double Bottom 27
5.7 Inner Bottoms and Margin Plates 28
5.8 Tank Side Brackets 28
5.9 Manholes and Lightening Holes 28

Chapter 6 Frames **30**

6.1 General 30
6.2 Frame Spacing 30
6.3 Transverse Hold Frames 30
6.4 Side Longitudinals and Other Structural Members 31
6.5 Tween Deck Frames 33
6.6 Frames in Fore and After Peaks 34

Chapter 7 Cantilever Beam Construction **35**

7.1 Cantilever Beam Systems 35
7.2 Web Frames 36
7.3 Connection of Cantilever Beams to Web Frames 38

Chapter 8 Shell Plating **39**

8.1 General 39
8.2 Plate Keels 39
8.3 Shell Plating for Midship Part of Ship 39
8.4 Shell Plating for End Parts 40
8.5 Side Plating in way of Superstructure 41
8.6 Local Compensation of Shell Plating 41

Chapter 9 Strengthening of Bottom Structure Forward **43**

9.1 General 43
9.2 Construction 43

Chapter 10 Beams **46**

10.1 General 46
10.2 Longitudinal Beams 46
10.3 Transverse Beams 47
10.4 Beams on Bulkhead Recesses and Others 47
10.5 Beams on top of Deep Tanks 47
10.6 Deck Beams Supporting Especially Heavy Loads 47
10.7 Deck Beams Supporting Vehicles 48
10.8 Deck Beams Supporting Unusual Cargoes 48

Chapter 11 Deck Girders and Pillars **49**

11.1 General 49
11.2 Longitudinal Deck Girders 50
11.3 Transverse Deck Girders 52
11.4 Deck Girders in Tanks 53
11.5 Hatch Side Girders 53
11.6 Hatch End Beams 53
11.7 Scantlings of Pillars 53
11.8 Bulkheads in lieu of Pillars 55
11.9 Casing provided in lieu of Pillars 55

Chapter 12 Decks **56**

12.1 Value of Deck Load h 56
12.2 General 58
12.3 Effective Sectional Area of Strength Deck 58
12.4 Deck Plating 59

Chapter 13 Superstructures and Deckhouses **61**

13.1 General 61
13.2 Construction and Scantlings 61
13.3 Closing Means for Access Openings in Superstructure End Bulkheads and Deckhouses Protecting Companion 63
13.4 Aluminum Superstructures and Deckhouses 64

Chapter 14 Bulwarks, Freeing Ports, Side Scuttles, Shell Doors and Gangways **65**

14.1 Bulwarks and Guardrails 65
14.2 Freeing Ports 66
14.3 Side Scuttles and Windows 68
14.4 Bow Doors and Inner Doors 71
14.5 Side Shell Doors and Stern Doors 80

14.6 Ventilators 84
14.7 Gangways 86
14.8 Means of Embarkation and Disembarkation 86

Chapter 15 Watertight Bulkheads 87

15.1 General 87
15.2 Construction of Watertight Bulkheads 88
15.3 Watertight Doors 91
15.4 Other Watertight Construction 91

Chapter 16 Arrangements to Resist Panting 92

16.1 General 92
16.2 Arrangements to Resist Panting Forward of Collision Bulkhead 92
16.3 Arrangements to Resist Panting abaft of After Peak Bulkhead 94

Chapter 17 Deep Tanks 96

17.1 General 96
17.2 Deep Tank Bulkheads 96
17.3 Fittings of Deep Tanks 98

Chapter 18 Hatchways, Machinery Space Openings and Other Deck Openings 100

18.1 General 100
18.2 Hatchways 100
18.3 Machinery Space Openings 126
18.4 Companionways and Other Deck Openings 127

Chapter 19 Machinery Spaces and Tunnels 133

19.1 General 133
19.2 Engine Seatings 133
19.3 Construction of Boiler Rooms 134
19.4 Block and Auxiliary Foundations 134
19.5 Tunnels and Tunnel Recesses 134

Chapter 20 Ceiling and Sparring 137

20.1 Ceiling 137

20.2 Sparring 137

Chapter 21 Subdivisions and Damage Stability 138

21.1 General 138

Chapter 22 Means of Access 139

22.1 General Rules 139
22.2 Special Requirements for Oil Tankers 139

Chapter 23 Painting 144

23.1 Painting 144
23.2 Cementing 144

Chapter 24 Rudders 145

24.1 General 145
24.2 Rudder Force and Rudder Torque 147
24.3 Rudder Strength Calculation 150
24.4 Rudder Stock Scantlings 151
24.5 Rudder Plating, Rudder Frames and Rudder Main Pieces 151
24.6 Connections of Rudder Blade Structure with Solid Parts 153
24.7 Single Plate Rudders 155
24.8 Rudder Stock Couplings 156
24.9 Pintles 161
24.10 Rudder Stock Bearings, Rudder Shaft Bearing and Pintle Bearings 162
24.11 Steering Nozzles 163
24.12 Azimuthal Thruster 169

Chapter 25 Equipment 177

25.1 General 177
25.2 Equipment Number 177
25.3 Anchors 178
25.4 Chain Cables 178
25.5 Towlines and Mooring Ropes 179
25.6 Chain Lockers 179
25.7 Emergency Towing Procedures 179
25.8 Towing and Mooring Fittings 180
25.9 Towing and Mooring Arrangements Plan 182

Chapter 26 Ships for Restricted Services 184

26.1 Application..... 184
26.2 Ships for Coastal Service 184
26.3 Ships for Protected Water Service..... 185
26.4 Ships not Engaged on International Voyages 186

Appendix 1 Guidance on Conditions for Loading Manual..... 187

A1.1 General..... 187
A1.2 Loading Manual 187

Chapter 1
General

1.1 Application and Equivalency

1.1.1 Application

(a) This Part applies to steel ships of which are less than 90 m in length for unrestricted service.

(b) In addition to the requirements in Chapter 26 of this Part, hull construction, equipment and scantlings of ships for restricted service may be appropriately modified according to the condition of service as approved by the Society. However, relevant information for the modification is to be submitted.

1.1.2 Special cases in application

(a) International Convention on Load Lines
  (i) For ships which International Convention on Load Lines is not applicable to, L_f defined in 1.5.2 of this Chapter is to be read as L.
  (ii) Even where a ship is intended to be classified for restricted services, the provisions in 26.3.3 and 26.3.4 of this Part can not be applied as far as International Convention on Load Lines is to apply to the ship.

(b) Ships less than 30 m in length
  (i) Notwithstanding the provisions in 1.1.1, the requirements for hull construction, equipment, arrangement and scantlings of ships less than 30 m in length or that do not comply with the requirements in this Part for some special reason are to be at the Society's discretion.
  (ii) For ships up to 24 m in length, recognized standards may be accedpted by the Society, such as the following standards:
    (1) ISO 12215: Small craft - Hull construction and scantlings
    (2) ISO 12217: Small craft - Stability and buoyancy assessment and categorization

(c) Cargo vessels which are engaged in international voyages and are not less than 500 gross tonnage are to comply with the requirements in Chapter 29 of Part II.

(d) Ships of unusual form or proportion, or intended for carriage of special cargoes
  (i) In ships of unusual form or proportion, or intended for carriage of special cargoes, the requirements concerning hull construction, equipment, arrangement and scantlings will be decided individually basing upon the general principle of this Part instead of the requirements in this Part.
  (ii) The hull structural members of ships intended for the carriage of cargoes having moisture contents which exceed transportable moisture limit are to be in accordance with the requirements provided in this Part. In addition, the special considerations deemed necessary by the Society are to be taken into account.

1.1.3 Equivalency

Alternative hull construction, equipment, arrangement and scantlings will be accepted by the Society, provided that the Society is satisfied that such construction, equipment, arrangement and scantlings are equivalent to those required in this Part.

1.1.4 Special consideration

Where the requirements of this part are impractical to a ship (e.g., considering the ship's type, size and service area), special consideration may be given by the Society.

1.2 Stability

The requirements of intact stability are to be in accordance with Chapter 30 of Part II.

1.3 Fire Protection

Fire protection, detection and extinction are to be in accordance with the requirements in Part IX of the Rules.

1.4 Materials, Scantlings and End Connections

1.4.1 Materials

(a) The requirements in this Part concerning hull construction and equipment are based upon the use of materials which comply with the requirements in Part XI.

(b) Where higher strength steels specified in Chapter 3 of Part XI, are used, the construction and scantlings of ships are to comply with (i) to (iii):

(i) The section modulus of the transverse sections of the hull is not to be less than the value obtained by multiplying the following material factor (K) to the value specified in Chapter 3 of this Part. Moreover, the extent of higher strength steel use is to be in accordance with the discretion of the Society.

K = 1.0, where only mild steels are used

K = 0.78, where higher strength steels AH32, DH32, EH32 and FH32 are used

K = 0.72, where higher strength steels AH36, DH36, EH36 and FH36 are used

K = 0.68, where higher strength steels AH40, DH40, EH40 and FH40 are used

(ii) With the exception of the requirements in (i), details such as the thickness of decks and shell plating, the section modulus of stiffeners, and other scantlings are to be at the discretion of the Society.

(iii) With the exception of the requirements in (i), the construction and scantlings where higher strength steels are used are to be at the discretion of Society.

(c) Where materials other than those specified in Part XI are used for the main hull structure, the use of such materials and corresponding scantlings are to be at the discretion of the Society.

(d) Where stainless steel or stainless clad steel specified in Chapter 9 of Part XI is used for the main hull structure, use of the materials and their scantlings are to be subject to the following:

(i) The section modulus of the transverse section of the hull is not to be less than the value obtained by multiplying the following material factor (K) with the value specified in Chapter 3 of this Part. However, the material factor (K) is to be rounded to three decimal places and not less than 0.63.

$K = f_T \{8.81(\sigma_y/1000)^2 - 7.56(\sigma_y/1000) + 2.29\}$ for $\sigma_y \leq 355$ (N/mm^2)

$K = f_T f_C (235/\sigma_y)$ for stainless steel with $\sigma_y > 355$ (N/mm^2)

Where

f_C = $3.04(\sigma_y/1000)^2 - 1.09(\sigma_y/1000) + 1.09$

where:

σ_y = The minimum value of yield strength (N/mm^2) or proof stress (N/mm^2) of stainless steel or stainless clad steel specified in Chapter 3 of Part XI

f_T = $0.0025(T-60)+1.00$

where:

T = The maximum temperature (^{0}C) of cargo in contact with the materials. Where the temperature is less than 60^{0}C, T is to be taken as 60^{0}C.
However, if T is more than 100^{0}C, the value is at the discretion of the Society.

(ii) Where the materials used acts effectively for corrosion resistance to cargoes intended to be carried, the value deemed appropriate by the Society may be reduced from the scantlings required by the relevant requirements.

(iii) Notwithstanding the requirements in 1.4.1(d)(i) of this Chapter, 0.78 is to be used as the lower limit of the material factor (K) when determining the construction and scantlings for areas of anticipated stress concentration, except where deemed appropriate by the Society.

(e) Where materials other than those specified in the Rules are used, the use of such materials and corresponding scantlings are to be specially approved by the Society.

(f) Materials used for the hull construction of ships assigned with **Protected Waters Service** notation are to be at the discretion of the Society.

(g) The steels used for hull structures are to be in accordance with the requirements of 1.5 of Part II. However, the steel grades shown in Table XV 1-1 and Table XV 1-2 as below may be used in lieu of Table II 1-4 to Table II 1-9 of Part II. Where stainless clad steel specified in Chapter 9 of Part XI is used for hull construction, the thickness of the base steel is to be used as the thickness of the plate in Table II 1-4 to Table II 1-9 of Part II.

Table XV 1-1
Application of Normal Strength Steels for Ships of Less Than 90 m in Length

<table>
<tr><th rowspan="2">Structural member</th><th rowspan="2" colspan="2">Application</th><th colspan="6">Thickness of plate : t (mm)</th></tr>
<tr><th>t ≤ 15</th><th>15 < t ≤ 20</th><th>20 < t ≤ 25</th><th>25 < t ≤ 30</th><th>30 < t ≤ 40</th><th>40 < t ≤ 50</th></tr>
<tr><td colspan="9">Shell Plating</td></tr>
<tr><td rowspan="3">Sheer strake at strength deck</td><td colspan="2">within 0.4L amidship</td><td>A</td><td>B</td><td colspan="2">D</td><td colspan="2">E</td></tr>
<tr><td colspan="2">within 0.6L amidship excluding the above</td><td colspan="2">A</td><td>B</td><td colspan="2">D</td><td>E</td></tr>
<tr><td colspan="2">other than those mentioned above</td><td colspan="4">A</td><td>B</td><td>D</td></tr>
<tr><td rowspan="2">Side plating</td><td rowspan="2">Within 0.4L amidship</td><td>within 0.1D downward from the lower surface of strength deck</td><td colspan="2">A</td><td>B</td><td colspan="2">D</td><td>E</td></tr>
<tr><td>other than those mentioned above</td><td colspan="4">A</td><td>B</td><td>D</td></tr>
<tr><td rowspan="2">Bilge strake</td><td colspan="2">within 0.6L amidship</td><td colspan="2">A</td><td>B</td><td colspan="2">D</td><td>E</td></tr>
<tr><td colspan="2">other than those mentioned above</td><td colspan="4">A</td><td>B</td><td>D</td></tr>
<tr><td>Bottom plating including keel plate</td><td colspan="2">within 0.4L amidship</td><td colspan="2">A</td><td>B</td><td colspan="2">D</td><td>E</td></tr>
<tr><td colspan="9">Deck plating</td></tr>
<tr><td rowspan="3">Stringer plate in strength deck</td><td colspan="2">within 0.4L amidship</td><td>A</td><td>B</td><td colspan="2">D</td><td colspan="2">E</td></tr>
<tr><td colspan="2">within 0.6L amidship excluding the above</td><td colspan="2">A</td><td>B</td><td colspan="2">D</td><td>E</td></tr>
<tr><td colspan="2">other than those mentioned above</td><td colspan="4">A</td><td>B</td><td>D</td></tr>
<tr><td rowspan="3">Strength deck strake adjoining to longitudinal bulkhead</td><td colspan="2">within 0.4L amidship</td><td>A</td><td>B</td><td colspan="2">D</td><td colspan="2">E</td></tr>
<tr><td colspan="2">within 0.6L amidship excluding the above</td><td colspan="2">A</td><td>B</td><td colspan="2">D</td><td>E</td></tr>
<tr><td colspan="2">other than those mentioned above</td><td colspan="4">A</td><td>B</td><td>D</td></tr>
<tr><td rowspan="2">Strength deck at cargo hatch corner</td><td colspan="2">within 0.4L amidship</td><td>A</td><td>B</td><td colspan="2">D</td><td colspan="2">E</td></tr>
<tr><td colspan="2">other than those mentioned above (requirements for large hatch openings are to be as given in the row above)</td><td colspan="4">A</td><td>B</td><td>D</td></tr>
<tr><td>Strength deck other than mentioned above</td><td colspan="2">within 0.4L amidship</td><td colspan="2">A</td><td>B</td><td colspan="2">D</td><td>E</td></tr>
<tr><td>Deck plating exposed to weather, in general</td><td colspan="2">within 0.4L amidship</td><td colspan="4">A</td><td>B</td><td>D</td></tr>
<tr><td colspan="9">Longitudinal bulkhead</td></tr>
</table>

<table>
<tr><th rowspan="2">Structural member</th><th rowspan="2">Application</th><th colspan="6">Thickness of plate : t (mm)</th></tr>
<tr><th>t ≤ 15</th><th>15 < t ≤ 20</th><th>20 < t ≤ 25</th><th>25 < t ≤ 30</th><th>30 < t ≤ 40</th><th>40 < t ≤ 50</th></tr>
<tr><td>Upper strake in longitudinal bulkhead adjoining to strength deck</td><td>within 0.4L amidship</td><td colspan="2">A</td><td>B</td><td colspan="2">D</td><td>E</td></tr>
<tr><td>Lower strake in longitudinal bulkhead adjoining to bottom plate</td><td>within 0.4L amidship</td><td colspan="4">A</td><td>B</td><td>D</td></tr>
<tr><td colspan="8">Longitudinals</td></tr>
<tr><td>Upper strake in sloping plate of topside tank adjoining to strength deck</td><td>within 0.4L amidship</td><td colspan="2">A</td><td>B</td><td colspan="2">D</td><td>E</td></tr>
<tr><td>Longitudinal plating members above strength deck including end bracket and face plate of longitudinal girders</td><td>within 0.4L amidship</td><td colspan="2">A</td><td>B</td><td colspan="2">D</td><td>E</td></tr>
<tr><td colspan="8">Cargo Hatch</td></tr>
<tr><td>Cargo hatch coaming longitudinally extended on the strength deck over 0.15L (including face plate and its flange, but excluding other stiffeners)</td><td>within 0.4L amidship</td><td colspan="2">A</td><td>B</td><td colspan="2">D</td><td>E</td></tr>
<tr><td>Hatch cover</td><td>top plates, bottom plates and primary supporting members</td><td colspan="4">A</td><td>B</td><td>D</td></tr>
<tr><td colspan="8">Stern</td></tr>
<tr><td>Stern frame, rudder horn, rudder trunk, shaft bracket</td><td>-</td><td colspan="4">A</td><td>B</td><td>D</td></tr>
<tr><td colspan="8">Rudder</td></tr>
<tr><td>Rudder Plate</td><td>-</td><td colspan="4">A</td><td>B</td><td>D</td></tr>
<tr><td colspan="8">Other</td></tr>
<tr><td colspan="2">Other members than those mentioned above (including stiffeners)</td><td colspan="6">A</td></tr>
</table>

Note:

(1) Where the strength deck strake adjoined to the inner skin bulkhead of double hull ships is not a deck stringer plate, the deck strake may be treated as an ordinary strength deck strake.

Table XV 1-2
Application of Higher Strength Steels for Ships of Less Than 90 m in Length

<table>
<tr><th rowspan="2">Structural member</th><th rowspan="2" colspan="2">Application</th><th colspan="6">Thickness of plate : t (mm)</th></tr>
<tr><th>t ≤ 15</th><th>15 < t ≤ 20</th><th>20 < t ≤ 25</th><th>25 < t ≤ 30</th><th>30 < t ≤ 40</th><th>40 < t ≤ 50</th></tr>
<tr><td colspan="9">Shell Plating</td></tr>
<tr><td rowspan="3">Sheer strake at strength deck</td><td colspan="2">within 0.4L amidship</td><td colspan="2">AH</td><td colspan="2">DH</td><td colspan="2">EH</td></tr>
<tr><td colspan="2">within 0.6L amidship excluding the above</td><td colspan="3">AH</td><td colspan="2">DH</td><td>EH</td></tr>
<tr><td colspan="2">other than those mentioned above</td><td colspan="5">AH</td><td>DH</td></tr>
<tr><td rowspan="2">Side plating</td><td rowspan="2">Within 0.4L amidship</td><td>within 0.1D downward from the lower surface of strength deck</td><td colspan="4">AH</td><td colspan="2">DH</td><td>EH</td></tr>
<tr><td>other than those mentioned above</td><td colspan="6">AH</td><td>DH</td></tr>
<tr><td rowspan="2">Bilge strake</td><td colspan="2">within 0.6L amidship</td><td colspan="4">AH</td><td colspan="2">DH</td><td>EH</td></tr>
<tr><td colspan="2">other than those mentioned above</td><td colspan="6">AH</td><td>DH</td></tr>
<tr><td>Bottom plating including keel plate</td><td colspan="2">within 0.4L amidship</td><td colspan="4">AH</td><td colspan="2">DH</td><td>EH</td></tr>
<tr><td colspan="9">Deck plating</td></tr>
<tr><td rowspan="3">Stringer plate in strength deck</td><td colspan="2">within 0.4L amidship</td><td colspan="2">AH</td><td colspan="2">DH</td><td colspan="2">EH</td></tr>
<tr><td colspan="2">within 0.6L amidship excluding the above</td><td colspan="4">AH</td><td colspan="2">DH</td><td>EH</td></tr>
<tr><td colspan="2">other than those mentioned above</td><td colspan="6">AH</td><td>DH</td></tr>
<tr><td rowspan="3">Strength deck strake adjoining to longitudinal bulkhead</td><td colspan="2">within 0.4L amidship</td><td colspan="2">AH</td><td colspan="2">DH</td><td colspan="2">EH</td></tr>
<tr><td colspan="2">within 0.6L amidship excluding the above</td><td colspan="4">AH</td><td colspan="2">DH</td><td>EH</td></tr>
<tr><td colspan="2">other than those mentioned above</td><td colspan="6">AH</td><td>DH</td></tr>
<tr><td rowspan="2">Strength deck at cargo hatch corner</td><td colspan="2">within 0.4L amidship</td><td colspan="2">AH</td><td colspan="2">DH</td><td colspan="2">EH</td></tr>
<tr><td colspan="2">other than those mentioned above (requirements for large hatch openings are to be as given in the row above)</td><td colspan="6">AH</td><td>DH</td></tr>
<tr><td>Strength deck other than mentioned above</td><td colspan="2">within 0.4L amidship</td><td colspan="4">AH</td><td colspan="2">DH</td><td>EH</td></tr>
<tr><td>Deck plating exposed to weather, in general</td><td colspan="2">within 0.4L amidship</td><td colspan="6">AH</td><td>DH</td></tr>
<tr><td colspan="9">Longitudinal bulkhead</td></tr>
<tr><td>Upper strake in longitudinal bulkhead adjoining to strength deck</td><td colspan="2">within 0.4L amidship</td><td colspan="4">AH</td><td colspan="2">DH</td><td>EH</td></tr>
</table>

Structural member	Application	Thickness of plate : t (mm)					
		t ≤ 15	15 < t ≤ 20	20 < t ≤ 25	25 < t ≤ 30	30 < t ≤ 40	40 < t ≤ 50
Lower strake in longitudinal bulkhead adjoining to bottom plate	within 0.4L amidship	AH					DH
Longitudinals							
Upper strake in sloping plate of topside tank adjoining to strength deck	within 0.4L amidship	AH			DH		EH
Longitudinal plating members above strength deck including end bracket and face plate of longitudinal girders	within 0.4L amidship	AH			DH		EH
Cargo Hatch							
Cargo hatch coaming longitudinally extended on the strength deck over 0.15L (including face plate and its flange, but excluding other stiffeners)	within 0.4L amidship	AH			DH		EH
Hatch cover	top plates, bottom plates and primary supporting members	AH					DH
Stern							
Stern frame, rudder horn, rudder trunk, shaft bracket	-	AH					DH
Rudder							
Rudder Plate	-	AH					DH
Other							
Other members than those mentioned above (including stiffeners)		AH					

Note:

(1) Where the strength deck strake adjoined to the inner skin bulkhead of double hull ships is not a deck stringer plate, the deck strake may be treated as an ordinary strength deck strake.

1.4.2 Scantlings

(a) Section moduli include the steel plates with an effective breadth of 0.1*l* on either side of the members, unless specified otherwise. However, the 0.1*l* steel plates are not to exceed one-half of the distance to the next member. *l* is the length of the member specified in the relevant chapters.

(b) Where flat bars, angles or flanged plates are welded to form beams, frames or stiffeners for which section moduli are specified, they are to be of suitable depth and thickness in proportion to the section modulus specified in the Rules.

(c) The inside radius of flanged plates is not to be less than twice but not more than three times the thickness of steel plates.

(d) The thickness of face plates composing girders and transverses is not to be less than that of web plates and the full width is not to be less than that obtained from the following formula:

$$85.4\sqrt{d_0 l}$$

d_0 = Depth (m) of girders and transverses specified in the relevant chapters

l = Distance (m) between supports of girders and transverses specified in the relevant chapters; However, where effective tripping brackets are provided, they may be taken as supports.

(e) Scantlings of stiffeners based on requirements in this Part may be decided based on the concept of grouping designated sequentially placed stiffeners of equal scantlings. The scantling of the group is to be taken as the greater of the values obtained from the following requirements (i) and (ii). However, this requirement is not applicable to fatigue requirements.

(i) the average of the required scantling of all stiffeners within a group

(ii) 90% of the maximum scantling required for any one stiffener within the group

1.4.3 Connection of ends of stiffeners, girders and frames

(a) Where the ends of girders are connected to structures such as bulkheads and tank tops, the end connections are to be balanced by effective supporting members on the opposite side of these structures.

(b) The length of the frame-side arm of brackets connected to the frames or stiffeners of structures such as bulkheads or deep tanks is not to be less than one-eighth of *l* specified in the relevant chapter, unless specified otherwise.

1.4.4 Brackets

(a) The size of brackets is to be determined by Table XV 1-3 of this Chapter according to the length of longer arm.

(b) The thickness of brackets is to be suitably increased where the depth of the brackets at the throat is less than two-thirds of the longer arm of the bracket.

(c) Where lightening holes are cut into the brackets, the distance from the circumference of the hole to the free flange of the bracket is not to be less than the diameter of the lightening hole.

(d) Where the length of the longer arm exceeds 800 mm, the free edges of the brackets are to be stiffened by flanging or by other means, except where tripping brackets or the like are provided.

1.4.5 Modification of span (*l*) for thicker brackets

Where brackets are not thinner than the girder plates, the value of *l* specified in Chapter 7, 11, 15 and 17 of this Part may be modified in accordance with the following:

(a) Where the sectional area of the face plate of the bracket is not less than one-half that of the girder and the face plate of the girder is carried to the bulkhead, deck, tank top, etc., *l* may be measured to a point 0.15 m inside the toe of the bracket.

(b) Where the sectional area of the face plate of the bracket is less than one-half that of the girder and the face plate of the girder is carried on to the bulkhead, deck, tank top, etc., l may be measured to a point where the sum of sectional areas of the bracket and its face plate outside the line of the girder is equal to the sectional area of the face plate of the girder, or to a point 0.15 m inside the toe of the bracket, whichever is the greater.

(c) Where brackets are provided and the face plates of girders extend along the free edge of brackets to the bulkhead, deck, tank top, etc., even if the free edge of brackets is curved, *l* is to be measured to the toe of the bracket.

(d) Brackets are not to be considered effective beyond the point where the arm along the girder is 1.5 times the length of the arm on the bulkhead, deck, tank top, etc.

(e) In no case is the modification of *l* at either end to exceed one-quarter of the overall length of the girder including the Parts of end connection.

Table XV 1-3
Brackets

Length of longer arm	Thickness		Breadth of flange	Length of longer arm	Thickness		Breadth of flange
	Plane	Flanged			Plane	Flanged	
150	6.5	-	-	700	14.0	9.5	70
200	7.0	6.5	30	750	14.5	10.0	70
250	8.0	6.5	30	800	-	10.5	80
300	8.5	7.0	40	850	-	11.0	85
350	9.0	7.0	40	900	-	11.0	90
400	10.0	8.0	50	950	-	11.5	90
450	10.5	8.0	50	1,000	-	11.5	95
500	11.0	8.5	55	1,050	-	12.0	100
550	12.0	8.5	55	1,100	-	12.5	105
600	12.5	9.0	65	1,150	-	12.5	110
650	13.0	9.0	65	-	-	-	-

1.4.6 Carriage of oil or other flammable liquid substances

(a) The requirements for construction and arrangement of ships for the carriage of fuel oils specified in this Part apply to ships carrying fuel oils having a flashpoint not less than 60°C determined by a closed cup test.

(b) The construction and arrangement of ships for the carriage of fuel oils having a flashpoint less than 60°C determined by a closed cup test, are to be in accordance with the requirements provided in this Chapter, as well as other requirements deemed necessary by the Society.

(c) The construction and arrangement of deep oil tanks of ships intended to carry cargo oils are to be in accordance with the requirements in Part III.

(d) In ships of not less than 400 gross tonnage, oils or other flammable liquid substances are not to be carried in compartments forward of the collision bulkhead.

1.5 Definitions

The definitions of terms which appear in this Part are to be as specified in this Chapter, unless specified elsewhere.

1.5.1 Length of ship (L)

Length of ship is the distance in metres on the designed maximum load line defined in 1.5.8(b) of this Chapter, from the fore side of the stem to the aft side of the rudder post for ships with a rudder post, or to the axis of the rudder stock for ships without a rudder post. However, for ships with a cruiser stern, L is as defined above or 96% of the total length on the designed maximum load line, whichever is the greater.

1.5.2 Length for freeboard (L_f)

The length for freeboard is 96% of the length in metres measured from the fore side of the stem to the aft side of the aft end shell plate on a waterline at 85% of the least moulded depth measured from the top of the keel, or the length in metres measured from the fore side of the stem to the axis of the rudder stock on that waterline, whichever is the greater. However, where the stem contour is concave above the waterline at 85% of the least moulded depth, the forward terminal of this length is to be taken at the vertical projection to this waterline of the aftermost point of the stem contour. The waterline on which this length is measured is to be parallel to the load line defined in 1.5.8 of this Chapter.

1.5.3 Breadth of ship (B)

The breadth of ship is the horizontal distance in metres from the outside of frame to the outside of frame measured at the broadest part of the hull.

1.5.4 Depth of ship (D)

The depth of ship is the vertical distance in metres measured at the middle of L from the top of the keel to the top of the freeboard deck beam at side. Where watertight bulkheads extend to a deck above the freeboard deck and are recorded in the Register Book as effective up to that deck, the depth is to be measured to the bulkhead deck.

1.5.5 Speed of ship (V)

Speed of shipis the designed speed, in knots at the maximum continuous rating of the propelling machinery when the ship with clean bottom runs ahead on calm sea at the designed summer load draught.

1.5.6 Midship part of ship

The midship Part of ship is the part 0.4L amidships unless otherwise specified.

1.5.7 End parts of ship

The end parts of ship are the parts within 0.1L from each end of the ship.

1.5.8 Load line and designed maximum load line

(a) Load line is the water line corresponding to each freeboard assigned in accordance with International Convention on Load Lines, 1966.

(b) Designed maximum load line is the water line corresponding to the full load condition.

1.5.9 Load draught and designed maximum load draught

(a) Load draught is the vertical distance in metres measured at the middle of L_f from the top of the keel plate to the load line.

(b) Designed maximum load draught (d) is the vertical distance in metres from the top of the keel plate to the designed maximum load line measured at the middle of L.

1.5.10 Full load displacement (W)

Full load displacement is the moulded displacement in tons corresponding to the full load condition.

1.5.11 Block coefficient (C_b)

Block coefficient is the coefficient given by dividing the volume corresponding to full load displacement (W) by LBd.

1.5.12 Strength deck

The strength deck is the uppermost deck to which the shell plates extend at each section on the length of the ship. However, for superstructures (not including sunken superstructures) not exceeding 0.15L in length, the strength deck is the deck just below the superstructure deck. For design reasons, this deck may be taken as the strength deck even for superstructures exceeding 0.15L in length.

1.5.13 Freeboard deck

(a) The freeboard deck is normally the uppermost continuous deck. However, in cases where openings without permanent closing means exist on the exposed part of the uppermost continuous deck or where openings without permanent watertight closing means exist on the side of the ship below that deck, the freeboard deck is the continuous deck below that deck.

(b) In a ship having a discontinuous freeboard deck, the lowest line of the exposed deck and the continuation of that line parallel to the upper part of the deck is taken as the freeboard deck.

(c) Where a ship has multiple decks, an actual deck lower than one that complies with the freeboard deck defined in (a) or (b) above can be deemed the freeboard deck, and the load line can be marked corresponding to this deck in accordance with the requirements in International Convention on Load Lines, 1966. However, this lower deck is to be continuous in a fore and aft direction at least between the machinery space and peak bulkheads and continuous athwartships. When this lower deck is stepped, the lowest line of the deck and the continuation of that line parallel to the upper part of the deck is taken as the freeboard deck.

Chapter 2

Stems and Stern Frames

2.1 Stems

2.1.1 Plate stems

(a) The thickness of steel plate stems is not to be less than that obtained from the following formula:

$t_{min} = 0.10L + 4$ (mm)

Above and below the designed maximum load line, the thickness may be gradually tapered toward the stem head and the keel. At the upper end of the stem, it may be equal to the thickness of the side shell plating (at the fore end part) of the ship,and at the lower end of the stem, it may be equal to the thickness of the plate keel.

(b) Ribs are to be provided on the stem plates at an interval preferably not exceeding one meter, and where the radius of curvature at the fore end of the stem is large, proper reinforcement is to be made by providing it with a centre line stiffener or by any other means.

2.2 Stern Frames

2.2.1 Application

The requirements of this section apply only to stern frames without rudder post.

2.2.2 Propeller posts

(a) Propeller posts of cast steel stern frames and those of plate stern frames are to be of a shape suitable for the stream line at the after part of the hull, and the standard scantlings are given by the formulae and figures in Fig. XV 2-1 as below. Below the propeller boss, the breadth and thickness of the propeller post are to be gradually increased in order to provide sufficient strength and stiffness in proportion to the shoe pieces.

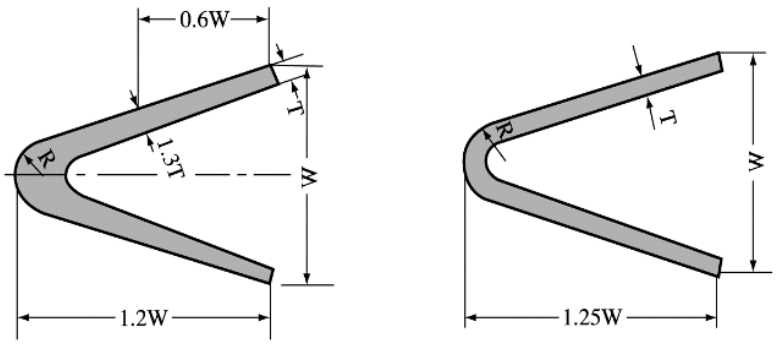

W:2.2L+88 (mm)
T:0.18L+15 (mm)
R:0.40L+16 (mm)
Propeller Post of Cast Steel Stern Frame

W:2.5L+100 (mm)
T:2.2√L+5.0 (mm)
R:0.40L+16 (mm)
Propeller Post of Steel Plate Stern Frame

Fig. XV 2-1
Standards of Propeller Posts

(b) The thickness of the boss of the propeller post is not to be less than that obtained from the following formula:

$t_{min} = 0.9L + 10$ (mm)

(c) The propeller posts of cast steel stern frames and those of plate stern frames are to be provided with ribs at a suitable interval. Where the radius of curvature is large, a centre line stiffener is to be provided.

(d) For ships with relatively high speed for their length, the scantlings of various parts of propeller posts are to be suitably increased.

2.2.3 Shoe pieces

(a) The scantling of each cross-section of the shoe piece as shown in Fig. XV 2-2 as below, is to be determined by the following formula (i) to (iv), considering the bending moment and shear force acting on the shoe piece when the rudder force specified in 24.2.1 of this Part is applied to the rudder.

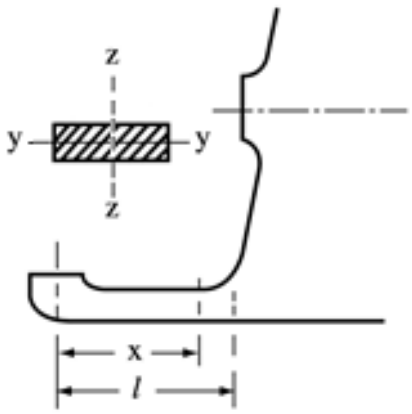

Fig. XV 2-2
Shoe Piece

(i) The section modulus Z_Z around the vertical Z-axis is not to be less than:

$$Z_Z = \frac{MK_{sp}}{80} \quad cm^3$$

where:

M = Bending moment (N-m) at the section considered, which is obtained from the following formula:

$M = Bx \qquad (M_{max} = Bl)$

where:

B = Supporting force (N) in the pintle bearing as given in 24.3 of this Part.

x = Distance (m) from the mid-point of the pintle bearing to the section considered, as specified in Fig. XV 2-2 as above.

l = Distance (m) from the mid-point of the pintle bearing to the fixed point of the shoe piece, as specified in Fig. XV 2-2 as above.

K_{sp} = Material factor for the shoe piece as given in 24.1.2 of this Part.

(ii) The section modulus Z_Y around the transverse Y-axis is not to be less than:

$Z_Y = 0.5Z_Z \qquad (cm^3)$

where:

Z_Z = As specified in 2.2.3(a)(i) above

(iii) The total section area A_s of the members in the Y-direction is not to be less than:

$$A_S = \frac{BK_{sp}}{48} \qquad mm^2$$

where:

B and K_{sp} = As specified in 2.2.3(a)(i) above

(iv) At no section within length *l* is the equivalent stress to exceed 115 / K_{sp} (N/mm^2).

The equivalent stress σ_e is to be obtained from the following formula:

$$\sigma_e = \sqrt{\sigma_b^2 + 3\tau^2} \qquad N/mm^2$$

The bending stress and the shear stress acting on the shoe piece are to be obtained from the following formulae respectively:

Bending stress: $\sigma_b = \frac{M}{Z_z(x)} \quad N/mm^2$

Shear stress: $\tau = \frac{B}{A_s}$

where:

Z_Z, A_S, M, and B = As specified in (i) to (iii)

(b) The thickness of the steel plates forming the main part of the shoe piece of steel plate stern frame is not to be less than that of the steel plates forming the main part of the propeller post. Ribs are to be arranged in the shoe piece below the propeller post, under brackets and at other suitable positions.

2.2.4 Heel pieces

The heel piece of the stern frame is to be of a length at least three times the frame space at that part and is to be strongly connected to the keel.

2.2.5 Attachment of stern frame to floor plates

The stern frame is to be sufficiently extended upward at the part of the propeller post and connected securely to the transom floor of a thickness not less than the value obtained from the following formula. At the upper part of the extended stern frame, the transom floor is to be reinforced to avoid a sudden change in stiffness.

0.035 L + 10.0 (mm)

2.2.6 Gudgeons

(a) The depth of gudgeons is not to be less than the length of the pintle bearing.

(b) The thickness of the gudgeon is not to be less than 0.25 × d_{p0}. For ships specified in 24.1.3 of this Part, the thickness of the gudgeon is to be appropriately increased. Where d_{p0} means actual diameter (mm) of the pintle measured at the outer surface of the sleeve.

2.2.7 Rudder trunk

(a) Materials, welding and connection to hull

This requirement applies to both trunk configurations (extending or not below stern frame).

The steel used for the rudder trunk is to be of weldable quality, with a carbon content not exceeding 0.23% on ladle analysis and a carbon equivalent C_{EQ} not exceeding 0.41%.

The weld at the connection between the rudder trunk and the shell or the bottom of the skeg is to be full penetration. The fillet shoulder radius r (mm) (See Fig. XV 2-3 of this Chapter) is to be as large as practicable and to comply with the following formulae:

$r = 60$	when $\sigma \geq 40 / K_s$	N/mm^2
$r = 0.1 \times d_{ls}$	without being less than 30, when $\sigma < 40 / K_s$	N/mm^2

where:

d_{ls} = Rudder stock diameter axis defined in 24.4.2 of this Part.

σ = Bending stress in the rudder trunk (N/mm^2).

K_s = Material factor as given in 24.1.2 of this Part.

The radius may be obtained by grinding. If disk grinding is carried out, score marks are to be avoided in the direction of the weld. The radius is to be checked with a template for accuracy. Four profiles at least are to be checked. A report is to be submitted to the Surveyor.

Rudder trunks comprising of materials other than steel are to be specially considered by the Society.

(b) Scantlings

Where the rudder stock is arranged in a trunk in such a way that the trunk is stressed by forces due to rudder action, the scantlings of the trunk are to be such that:

- the equivalent stress due to bending and shear does not exceed $0.35 \times \sigma_Y$,
- the bending stress on welded rudder trunk is to be in compliance with the following formula:

$\sigma \leq 80 / K_s$ (N/mm^2)

with:

σ = As defined in (a) above.

K_S = Material factor for the rudder trunk as given in 24.1.2, not to be taken less than 0.7

σ_Y = Yield stress (N/mm^2) of the material used.

For calculation of bending stress, the span to be considered is the distance between the mid-height of the lower rudder stock bearing and the point where the trunk is clamped into the shell or the bottom of the skeg.

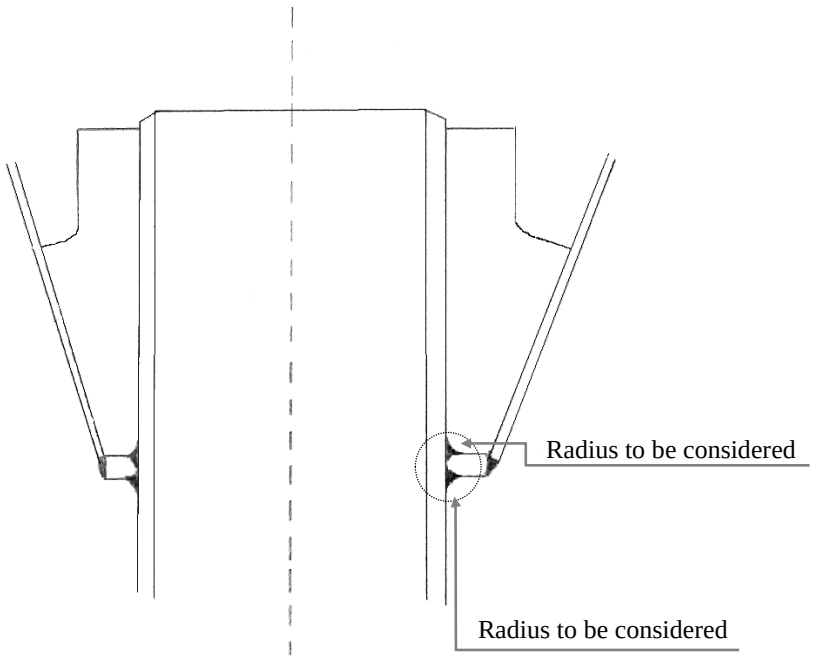

Fig. XV 2-3
Fillet Shoulder Radius

Chapter 3
Longitudinal Strength

3.1 General

3.1.1 Special cases in application

Where direct application of the requirements in this Chapter for items is deemed unreasonable, these items are to be in compliance with the discretion of the Society.

3.1.2 Continuity of strength

The arrangement of longitudinal members are to maintain continuity of strength.

3.2 Bending Strength

3.2.1 Bending strength at the midship part

(a) The section modulus of the transverse section of the hull at the midship part is not to be less than the Z_σ value calculated by the following formula. However, at the discretion of the Society, the requirements applicable to ships not exceeding 60 meters in length can be dispensed with.

$$Z_\sigma = 5.72(M_S + M_W) \qquad cm^3$$

where:

M_S = Maximum longitudinal bending moments, in kN-m, that sagging and hogging in still water are calculated at the transverse section under consideration along the length of the hull for all conceivable loading conditions by a method of calculation deemed appropriate by the Society.

M_W = In consideration of the wave-induced longitudinal bending moment, in kN-m, at the transverse section along the length of the hull, which is obtained by the following formula, corresponding to either the sagging or the hogging moment of M_S:

$0.19C_1C_2L^2BC_b$ (kN-m) for hogging moment of M_S

$0.11C_1C_2L^2B(C_b+0.7)$ (kN-m) for sagging moment of M_S

where:

C_1 = As given by the following formula: 0.03L+5

C_2 = Coefficient specified along the length at positions where the transverse section of the hull is under consideration, as given in Fig. XV 3-1 of this Chapter.

L = Length of ship as specified in 1.5.1 of this Part.

C_b = Block coefficient at summer load water-line based on L as defined in 1.2.1 of Part II. However, the value is to be taken as 0.6, where it is less than 0.6.

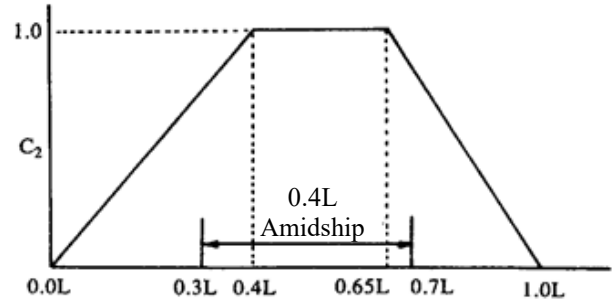

After End Fore End

Fig. XV 3-1
Coefficient C_2

(b) Notwithstanding the requirements of (a) above, the section modulus of the transverse section of the hull at the midpoint of L is not to be less than the value of W_{min} calculated by the following formula:

$$W_{min} = C_1 L^2 B(C_b + 0.7) \qquad cm^3$$

where:

C_1, L, C_b : As specified in (a) above.

(c) Moment of inertia of the transverse section of the hull at the middle point of L is not to be less than the value calculated by the following formula. However, that the method of calculating the moment of inertia of the actual transverse section is to be consistent with the requirements of 3.2.3 of this Chapter.

$$3W_{min}L \qquad cm^4$$

where:

W_{min} = Section modulus of the transverse section of hull at the middle point of L as specified in (b) above.

L = As specified in (a) above.

(d) The scantlings of longitudinal members in way of the midship part are not to be less than the scantlings of longitudinal members at the middle point of L which are determined by the requirement in (b) and (c) above, excluding changes in the scantlings due to variations in the sectional form of the transverse section of the hull.

3.2.2 Bending strength at sections other than the midship part

The bending strength of hull at sections except the middle part is to be as determined according to the requirements of 12.3 of this Part.

3.2.3 Calculation of section modulus of transverse section of hull

The calculation of the section modulus of the transverse section of the hull is to be based on the following requirements as given in (a) through (f).

(a) All longitudinal members which are considered effective to longitudinal strength are to be included in the calculation.

(b) Deck openings on the strength deck are to be deducted from the section area for the calculation of the section modulus. However, small openings not exceeding 2.5 m in length or 1.2 m in breadth need not to be deducted provided that the sum of their breadths in any single transverse section is not more than 0.06(B - ∑b), where B = breadth of ship, and ∑b is the total breadth of openings exceeding 1.2 m in breadth or 2.5 m in length.

(c) Notwithstanding the requirement in (b) above, small openings on the strength deck need not to be deducted, provided that the sum of their breadths in a single transverse section does not reduce the section modulus at strength deck or bottom by more than 3%.

(d) Deck openings specified in (b) and (c) above included the shadow area which is obtained by drawing two tangential lines with an opening angle of 30 degrees having their apex on the line drawn through the centre of the small openings along the length of the ship.

(e) The section modulus at the strength deck is to be calculated by dividing the moment of inertia of the athwartship section about its horizontal neutral axis by the following distance (i) or (ii), whichever is greater:

(i) Vertical distance, in m, from the neutral axis to the top of the strength deck beam at the side of the ship.

(ii) Distance obtained from the following formula:

$$y\left(0.9 + 0.2\frac{x}{B}\right) \qquad \text{m}$$

where:

x = Horizontal distance, in m, from the top of continuous strength member to the center line of the ship.

y = Vertical distance, in m, from the neutral axis to the top of continuous strength member.

In this case, x and y are to be measured to the point giving the largest value of the above formula.

(f) The section modulus at the bottom is to be calculated by dividing the moment of inertia of the athwartship section about its horizontal neutral axis by the vertical distance from the neutral axis to the top of keel.

3.3 Buckling Strength

3.3.1 Compressive buckling strength

Parts, such as the strength deck plating and bottom shell plating etc., subjected to large compressive stresses due to longitudinal bending are to be sufficient to withstand any compressive buckling.

Chapter 4
Single Bottoms

4.1 Floors

4.1.1 Scantling of floors

(a) Floors are to be fitted at every frame and to have the scantling necessary to obtain section modulus as obtained from the following formula:

$4.27\ s\ d\ l^2$ cm^3

where:

s = The spacing of floor, in m.

d = Draught or 0.66 times the depth, whichever is greater, in m.

l = Unsupported span of floor in m, generally measured between the toes of frame brackets plus 0.3 meters, as shown in Fig. XV 4-1 of this Chapter. Where curved floors are provided, the length *l* may be suitably modified.

(b) The depth of floor plates at centerline is not to be less than 0.0625 *l*, in m.

(c) In the midship part, the depth of floors measured at a distance h, from the inner edge of the frames along the upper edge of floors is not to be less than 0.5 times h, as shown in Fig. XV 4-1 of this Chapter, Where frame brackets are provided the depth of floors at the inner edge of brackets may be 0.5 times h.

(d) The thickness of floor plates is to be maintained throughout the midship one-half ship length, and is not to be less than:

0.01 h + 4 mm or 12 mm, whichever is the smaller

where:

h = Depth of floor plates at centerline, in mm.

(e) The thickness of floor plates may be gradually reduced by 15% beyond the midship one-half ship length. However, in the flat part of bottom forward, this reduction is not to be made.

(f) In ship having an unusually large rise of floor the depth of floor plates at the center line is to be suitably increased.

(g) Upper edges of floor plates at any part are not to be blow the level of the upper edges at the center line.

4.1.2 Spacing of floor plates

(a) In ship with the bottom of transverse framing, the standard spacing of floors is as stipulated in 6.2.1 of this Part.

(b) In ship with the bottom of longitudinal framing, floors are to be so arranged that their spacing is not more than about 3.5 m.

4.1.3 Face plates and flanges

(a) The thickness of face plates on the floor plates is not to be less than that required for the floor plates, and the breadth of face plates is to be adequate for lateral stability of the floors.

(b) Face plaes provided on the floor plates are to be continuous from the upper part of the bilge at one side to the upper part of the bilge on the opposite side in case of curved floors, or extend over the floor plate in case of floors connected by frame brackets.

4.1.4 Floors under engines and thrust seats are to be of ample depth and to be especially strengthened. Their thickness is not to be less than that of the center girder web plates.

4.1.5 At the strengthened bottom forward specified in Table XV 9-1 of this Chapter, the depth of floor plates is to be increased, or alternatively, the section modulus of floor plates required in 4.1.1 of this Chapter is to be suitably increase

4.1.6 Limber holes are to be provided above the frames in all floor plates on each side of the center line, and in addition, at the lower turn of the bilge in ships having flat bottoms.

4.1.7 Lighting holes may be provided in floor plates. Where the holes are provided, appropriate strength compensation is to be made by increasing the floor depth or by some other suitable means if deemed necessary.

4.1.8 The size of frame bracket, which is the connection between side frame and floor, as shown in Fig. XV 4-1 of this Chapter, is to be in accordance with the following requirements, and the free edge of bracket is to be stiffened also.

(a) The brackets are to extend to the height above the top of keel higher than twice the required depth of floors at the center line.

(b) The arm length of brackets measured from the outer edge of frames to the bracket toe along the upper edge of floors is not to be less than the required depth of floors at the center line.

(c) The thickness of brackets is not to be less than that of the floors required in 4.1.1 of this Chapter.

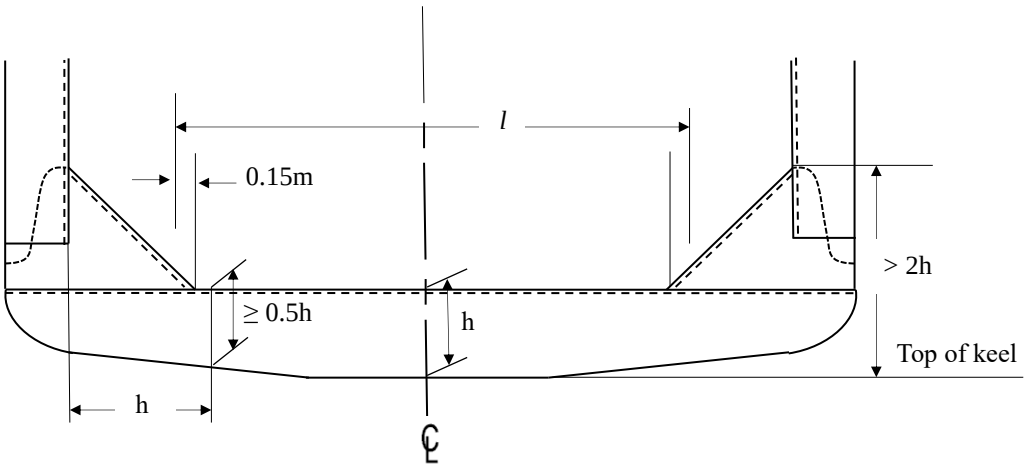

Fig. XV 4-1
Side Frame Bracket

4.2 Center Girders

4.2.1 All single bottom ships are to have center girder composed of web plates and face plates, and the center girder is to extend as far forward and afterward as practicable. The depth of web plates is not to be less than the floor.

4.2.2 The scantling of center girders is to be obtained from the following formula:

(a) Minimum thickness of web plates and face plates amidships:

0.065 L + 5.2 mm

where:
L = Length of ship as specified in 1.5.1 of this Part.
The thickness of web plates may be gradually reduced by 15% beyond the midship one-half ship length

(b) Sectional area of face plates amidships:

0.6 L + 9 cm^2

where:
L = Length of ship as specified in 1.5.1 of this Part.

(c) The breadth of face plate is not to be less than:

2.3 L + 160 mm

where:
L = Length of ship as specified in 1.5.1 of this Part.

(d) The face plates are to extend from the collision bulkhead to after peak bulkhead

4.3 Side Girders

4.3.1 The side girders are to be composed of continuous web plates in association with face plates, and they are to extend as far forward and aft as practicable.

4.3.2 The minimum thickness of web plates and face plates of side girders amidships is to be obtained from the following formula:

0.042 L + 5.8 mm

where:
L = Length of ship as specified in 1.5.1 of this Part.

(a) Beyond the midship part, the thickness may be gradually reduced by 15% at end parts of the ship.

(b) The thickness of web plate in the engine space is not to be less than that required in 4.2.2 of this Chapter.

4.3.3 Sectional area of face plates amidships

(a) The minimum sectional area of face plate is to be obtained from the following formula:

0.45 L + 8.8 cm^2

where:
L = Length of ship as specified in 1.5.1 of this Part.

(b) The face plate area is to be maintained continuously amidships, but may be grdually reduced by 15% beyond amidships.

4.3.4 Spacing of side girders

(a) Side girders are to be so arranged that the spacing is not more than 2.5 m between the center girder and the side girder.

(b) Additional side girders are to be fitted in the machinery space.

4.3.5 In ships having a partial double bottom, side girders are to extend at least 3 frame spacings into the double bottom.

4.4 Strengthening of Bottom Forward

The strengthening of the bottom structure forward is to be in accordance with the requirements in Chapter 9 of this Part.

4.5 Longitudinals

4.5.1 The section modulus of bottom longitudinals is not to be less than that obtained from the following formula:

$9shl^2$ cm^3

where:

l = Spacing of solid floors, in m.

s = Spacing of bottom longitudinals, in m.

h = Vertical distance, in m, from the longitudinals to a point of d + 0.026 L above the top of the keel.

4.5.2 Spacing of longitudinals

The standard spacing of bottom logitudinals is from following formula:

2 L + 550 mm

where:

L = Length of ship as specified in 1.5.1 of this Part.

Chapter 5
Double Bottoms

5.1 General

5.1.1 Application

(a) Ships are to be provided with watertight double bottoms extending from the collision bulkhead to the after peak bulkhead. The longitudinal system of framing is, in general, to be adopted. The inner bottom is to be continued out to the ship's sides in such a manner as to protect the bottom to the turn of the bilge, and is not lower at any part than a plane parallel with the keel line and which is located not less than a vertical distance h (m) measured from the keel line specified in 1.2.15 of Part II.

$$h = \frac{B'}{20}$$

Where

B' = The greatest moulded breadth, in m, of the ship at or below the deepest subdivision draught.

However, in no case is the value of h to be less than 0.76 m, and need not be taken as more than 2.0 m.

(b) Part or all of double bottoms may be omitted for ships deemed by the Society to not require a double bottom for special reasons and for ships deemed appropriate by the Society which are less than 500 gross tonnage or which are not engaged in international voyages.

(c) For ships other than ships specified in 5.1.1(b) above, double bottoms may be omitted in way of watertight tanks on the condition that the safety of the ship is not impaired in the event of bottom or side damage.

(d) The requirements in this Chapter may be suitably modified, where partial double bottoms are provided and where special arrangements such as longitudinal bulkheads or inner skins are made to reduce the unsupported breadth of double bottoms.

(e) Where the longitudinal system of framing is transformed into the transverse system, or depth of the double bottom changes suddenly, special care is to be taken for the continuity of strength by means of additional intercostal girders or floors.

(f) Special consideration is to be given to the double bottom structure of the hold when it is intended to carry heavy cargoes or where cargo loads can not be treated as evenly distributed loads.

5.1.2 Drainage

(a) Efficient arrangements are to be provided for draining water from the tank top.

(b) Regarding the application of 5.1.2(a) above, small wells may be constructed in the double bottom in connection with drainage arrangements of holds. Such wells are not to extend downward more than necessary. In addition, such wells are not to extend for more than one-half the depth of the double bottom as far as practicable. However, a well extending to the outer bottom is permitted at the after end of the shaft tunnel.

(c) Other wells (e.g. for lubricating oil under main engines) may be permitted by the Society if satisfied that the arrangements give protection equivalent to that afforded by a double bottom complying with this Chapter.

(d) For the wells specified in 5.1.2(b) and 5.1.2(c) above, except those at the ends of shaft tunnels, the vertical distance from the bottom of such a well to a plane coinciding with the keel line specified in 1.2.15 of Part II, is not to be less than 0.5 m. This requirement may be waived, however, where bilge tanks deemed appropriate by the Society are provided instead of wells for the purpose of complying with 5.1.2(a) above or where it is ascertained that the ship meets the requirements for the omission of double bottoms given in 5.1.1(b) or 5.1.2(c) above.

5.1.3 Oiltight cofferdams are to be provided in the double bottom between tanks carrying oils and those carrying fresh water, such as for personnel use or boiler feed water, to prevent fresh water from being contaminated by oil.

5.1.4 The thickness of watertight girders and floors, and the scantlings of stiffeners attached to them are to comply with the relevant requirements for girders and floors, as well as the requirements in 15.2.2 and 15.2.3 of this Part.

5.1.5 No structural member of the double bottom construction is to be less than 6 (mm) in thickness.

5.2 Center Girders

5.2.1 The scantling of center girders is to be obtained from the following formulae:

(a) Depth of center girder plate is not to be less than B/16 unless specially approved by the Society, but is not to be less than 700 mm.

(b) The minimum thickness of center girder plate is not to be less than:

$0.05\,L + 6$ mm

where:

L = Length of ship as specified in 1.5.1 of this Part.

5.2.2 Center girders are to extend as far forward and aft as practicable.

5.2.3 Center girder plates are to be continuous within the midship 0.5L.

5.2.4 Where double bottoms are used for carriage of fuel oil, fresh water or water ballast, the center girders are to be watertight. This requirements may be suitably modified in narrow tanks at the end parts of the ship or where other watertight longitudinal girders are provided at about 0.25B from the center line or where deemed appropriate by the Society.

5.2.5 Where the longitudinal framing system is adopted in the double bottom, transverse brackets are to be provided between the solid floors with a spacing of not more than 1.75 meters connecting the center girder plates to the bottom shell plating as well as the adjacent bottom longitudinals. The thickness of the bracket is not to be less than the following formula:

$0.6\sqrt{L} + 2.5$ mm

where:

L = Length of ship as specified in 1.5.1 of this Part.

However, the thickness need not be greater than that of the solid floors at the same location

5.2.6 Where the spacing of these brackets exceeds 1.25 meters, additional stiffeners are to be provided on the center girder plates. The stiffeners are to be flat bars having the same thickness as that of the girder plates and the depth not less than:

$0.08\,d_0$ m

where:

d_0 = Depth of the center girder, in m.

5.3 Side Girders

5.3.1 The scantling of side girders is to be obtained from the following formula:

(a) The minimum thickness of side girder plates in holds:

$0.65\sqrt{L} + 2.5$ mm

where
L = Length of ship as specified in 1.5.1 of this Part.
In the engine room, the thickness is to be increased by 1.5 (mm)

(b) The thickness of half-height girders is not to be less than that obtained from the formula in 5.3.1(a) above.

5.3.2 Side girders may be fitted intercostally between floors

5.3.3 Side girders in 0.5L amidships and aft are to be so arranged that the spacing between the center girder and the first side girder, between the girders, or from the outermost girder to the margin plate is not to be more than 4.6 m, and to extend as far afterwards as practicable.

5.3.4 In the strengthened bottom forward specified in 9.1.3 of this Part, side girders and half-height girders are to be provided as required in 9.2 of this Part.

5.3.5 Additional girders of full or half depth are to be fitted under the machinery space and the thrust seating.

5.3.6 Vertical stiffeners are to be provided to side girders at every open floor where the double bottom is framed transversely, or at a suitable distance where the double bottom is framed longitudinally, and vertical struts are to be provided on half-height girders at every open floor.

(a) The vertical stiffeners are to be flat bars having the same thickness as that of the girder plates and the depth is not to be less than requirements in 5.2.6 of this Chapter.

(b) The sectional area of vertical struts is not to be less than requirements in 5.6.3 of this Chapter.

5.4 Solid Floors

5.4.1 Solid floors are to be provided at a spacing not exceeding approximately 3.5 meters.

5.4.2 In addition to complying with the requirements in 5.4.1 above, solid floors are to be provided at the following locations:

(a) At every frame in the main engine room
Solid floors may, however, be provided at alternate frames outside the engine seatings, if the double bottom is framed longitudinally.

(b) Under thrust seatings and boiler bearers

(c) Under transverse bulkheads

(d) At the locations specified in 9.2 of this Part, between the collision bulkhead and the after end of the strengthened bottom forward specified in 9.1.3 of this Part.

5.4.3 Watertight floors are to be so arranged that the subdivision of the double bottom generally corresponds to that of the ship.

5.4.4 The thickness of solid floors is not to be less than that obtained from the following formulae and in the engine room, the thickness is to be increased by 1.5 mm.

$0.6\sqrt{L} + 2.5$ (mm), in ships with transverse framing
$0.7\sqrt{L} + 2.5$ (mm), in ships with longitudinal framing

5.4.5 Vertical stiffeners are to be provided at a suitable spacing on solid floors when the double bottom is framed transversely, and at every longitudinal when the double bottom is framed longitudinally. The vertical stiffeners are to be flat bars having the same thickness as that of the floor plates and the depth is not to be less than 0.08 d_0, where d_0 is as stipulated in 5.2.6 of this Chapter.

5.5 Open Floors

5.5.1 Where the double bottom is framed transversely, open floors are to be provided at every hold frame between solid floors in accordance with the requirements in 5.5.

5.5.2 Bottom frames and reverse frames

(a) The section modulus of frames is not to be less than 30 cm^3 and is obtained from the following formula:

$Csh l^2$ cm^3

where:

l = Distance, in m, between the brackets attached to the center girder and the margin plate:
Where side girders are provided, l is the greatest distance among the distance between the vertical stiffeners on side girders and the brackets, as shown in Fig. XV 5-1 of this Chapter.

s = Frame spacing, in m.

h = d + 0.026 L, in m

C = Coefficient given in Table XV 5-1 of this Chapter.

Table XV 5-1
Value of C

C =	6.0	for open floors without vertical struts as specified in 5.5.3 of this Chapter
	4.4	for open floors under deep tanks with vertical struts as specified in 5.5.3 of this Chapter
	2.9	for elsewhere

(b) The section modulus of reverse frames is not to be less than that obtained from the formula in 5.5.2(a) above with C equal to 0.85 times the value specified for frames at the same location. Where no vertical strut is provided on the open floors under deep tanks, the section modulus of reverse frames is to be the value specified in 17.2.3 of this Part.

5.5.3 Vertical struts are to be rolled sections other than flat bars and bulb plates and are to sufficiently overlap the webs of frames and reverse frames. The sectional area of vertical struts is to be in accordance with the requirements in 5.6.4 of this Chapter.

5.5.4 Frames and reverse frames are to be connected to the center girder and margin plates by brackets whose thickness is not to be less than that obtained from the formula in 5.2.5 of this Chapter. The breadth of brackets is not to be less than 0.05B and the brackets are to sufficiently overlap the frames and reverse frames. The free edges of the brackets are to be properly stiffened.

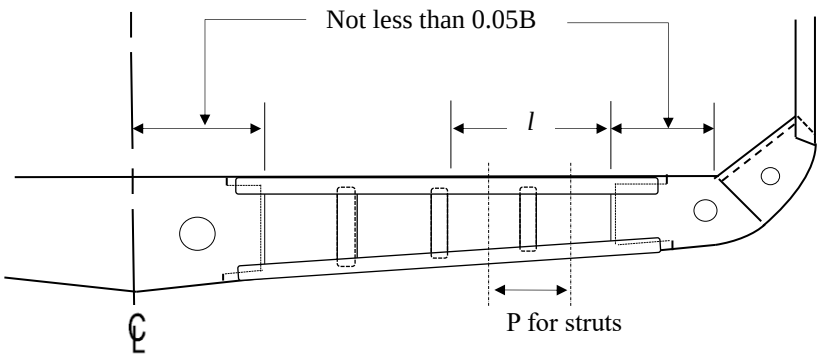

Fig. XV 5-1
Open Floors

5.6 Longitudinal Framing in Double Bottom

5.6.1 The standard spacing of longitudinal frames may be obtained from the following formula:

2L + 550 mm

where:

L = Length of ship as specified in 1.5.1 of this Part.

5.6.2 The section modulus of bottom longitudinal frames is not to be less than that obtained from the following formula:

$Csh\,l^2$ cm^3

where:

l = Spacing, in m, of solid floors.

s = Spacing, in m, of longitudinal frame.

h = Vertical distance, in m, from the longitudinals to a point of (d + 0.026 L) above the top of the keel.

C = Coefficient given in Table XV 5-2 as below.

Table XV 5-2
Value of C

C =	8.6	For longitudinals without struts as specified in 5.6.4 of this Chapter
	6.2	for longitudinals under deep tanks with struts as specified in 5.6.4 of this Chapter
	4.1	for elsewhere

5.6.3 The section modulus of inner bottom longitudinals is not to be less than obtained from the formula in 5.6.2 with C equal to 0.85 times the value specified for bottom longitudinals at the same location. Where no vertical struts is provided on the longitudinals under deep tanks, the section modulus of inner bottom longitudinals is to be the value specified in 1.2.3 of this Part.

5.6.4 Vertical struts are to be rolled section other than flat bars or bulb plates and are to sufficiently overlap the webs of bottom and inner bottom longitudinals.

(a) The sectional area of vertical struts is not to be less than obtained from the following formula:

2.2 SPh cm^2

where:
S = Spacing, in m, of longitudinals
P = Breadth, in m, of the area supported by the struts, as shown in Fig. XV 5-1 of this Chapter
h = Vertical distance, in m, from the longitudinals to a point of (d + 0.026 L) above the top of the keel

5.7 Inner Bottoms and Margin Plates

5.7.1 The thickness of the inner bottom plating is not to be less than that obtained from the following formula. Under the hatchway, if no ceiling is provided, and in the main engine room, the thickness is to be increased by 2 mm.

$$3.8S\sqrt{d} + 2.5$$

where:
S = Spacing, in m, of inner bottom longitudinals for longitudinally framed inner bottom plating, or spacing of floor plates for transversely framed inner bottom plating

5.7.2 In ships in which cargoes are regularly handled by grabs or similar mechanical appliances, the thickness of inner bottom plating is to be increased by 2.5 (mm) above that specified in 5.7.1 above, except where a ceiling is provided.

5.7.3 The thickness of margin plates is to be increased by 1.5 mm above that obtained from the formula in 5.7.1 above.

5.7.4 Margin plates are to be of adequate breadth and to extend well inside from the line of toes of tank side brackets.

5.7.5 Where the double bottom is framed longitudinally, brackets are to be provided transversely at every hold frame extending from the margin plate to the adjacent bottom and inner bottom longitudinals and to be connected with the margin plates, shell plating and longitudinals. The thickness of brackets is not to be less than that obtained from the formula in 5.2.5 of this Chapter.

5.8 Tank Side Brackets

5.8.1 The thickness of brackets connecting hold frames to margin plates is to be increased by 1.5 mm above that obtained from the formula in 5.2.5 of this Chapter.

5.8.2 The free edges of brackets are to be properly stiffened.

5.8.3 Where the shape of the ship requires exceptionally long brackets, additional stiffness is to be provided by fitting angles longitudinally across the top of the flanges, or by other suitable means.

5.9 Manholes and Lightening Holes

5.9.1 Manholes and lightening holes are to be provided in all non-watertight members to ensure accessibility and ventilation, except in way of widely spaced pillars and where such openings are not permitted by the Rules.

5.9.2 The number of manholes in tank tops is to be kept to the minimum compatible with securing free ventilation and ready access to all parts of the double bottom. Care is to be taken for locating the manholes to avoid the possibility of interconnection of main subdivision compartments through the double bottom so far as practicable.

5.9.3 Covers of manholes specified in 5.9.2 above are to be of steel, and where no ceiling is provided in the cargo holds, the covers and their fittings are to be effectively protected against damage by the cargo.

5.9.4 Air and drainage holes are to be provided in all non-watertight members of the double bottom structure.

5.9.5 The proposed locations and sizes of manholes and lightening holes are to be indicated in the plans submitted for approval.

5.9.6 Lightening holes may be provided on center girders in every frame space outside 0.75 L amidships.

5.9.7 Lightening holes may be provided on center girders in alternate frame spaces for 0.75 L amidships, provided that the depth of the holes does not exceed one-third of the depth of the center girder.

5.9.8 Lightening holes in the side girder located within 10% of the length of a hold from a transverse bulkhead, are to have a diameter not more than one-third the depth of the girder. However, this requirement may be modified in exceptional short holds and outside 0.75L amidships and where suitable compensation is made to the girder plate.

5.9.9 Within 0.1 B from side shell plating, the diameter of lightening holes provided in the solid floors in the middle half length of a hold is not to exceed about one-fifth of the depth of floors. However, this requirement may be modified at the end parts of ship and in exceptionally short holds and where suitable compensation is made to the solid floors.

Chapter 6

Frames

6.1 General

6.1.1 The requirements in this Chapter apply to ships having transverse strength and transverse stiffness provided by bulkheads. Where the transverse strength and stiffness provided by bulkheads are not sufficient or the hold length is over 25 meters in length, additional stiffening is to be made by means of increasing scantling of frames, additional provision of web frames, etc.

6.1.2 The scantlings of frames in way of deep tanks are not to be less than required for stiffeners on deep tank bulkheads.

6.1.3 Frames are not to extend through the tops of water or oil tanks, unless the effective watertight or oiltight arrangements are specially submitted and approved.

6.1.4 Frames in boiler spaces and in way of bossing

(a) In boiler spaces, the scantlings of members such as frames, web frames, and side stringers are to be appropriately increased.

(b) The construction and scantlings of frames in way of bossing are to be at the discretion of the Society.

6.2 Frame Spacing

6.2.1 Transverse frame spacing

(a) The standard spacing of transverse frames is obtained from the following formula:

$2L + 450$ mm

(b) Transverse frame spacing in peaks or cruiser sterns between 0.2 L from the fore end and the collision bulkhead is not to exceed 610 mm or the standard spacing specified in 6.2.1(a) above, whichever is smaller.

(c) The requirements in 6.2.1(b) above may be modified, where structural arrangements or scantlings are suitably considered.

6.2.2 The standard spacing of longitudinal frames is obtained from the following formula:

$2L + 550$ mm

6.2.3 Where the spacing of frames exceeds the standard spacing stipulated in 6.2.1 and 6.2.2 above by at least 170 mm, the scantlings and structural arrangement of single and double bottoms and other relevant structures are to be specially considered.

6.3 Transverse Hold Frames

6.3.1 Application

(a) The transverse hold frame is the frame below the lowest deck from the collision bulkhead to the after peak bulkhead including the machinery space.

(b) The application of these provisions to transverse hold frames of ships which have hopper side tanks, top side tanks, etc. or which have a special construction such as inner hulls, are to be at the discretion of the Society.

6.3.2 Scantlings of transverse hold frames

(a) The section modulus of transverse hold frames is not to be less than that obtained from the following formula, and is not to be less than 30 cm^3:

$CShl^2$ cm^3

where:

S = Frame spacing, in m.

l = Vertical distance, in m, from the top of inner bottom plating or single bottom floors at side to the top of deck beams above the frames.

h = Vertical distance, in m, from the lower end of the hold frame to a point ($d+0.044L-0.54$) above the top of the keel.

C = Coefficient obtained from the following formula:
For frames between 0.15L from the fore end and the after peak bulkhead: 2.6
For frames between 0.15L from the fore end and the collision bulkhead: 3.4

(b) For the frames under transverse web beams supporting deck longitudinals, the section modulus is to be obtained as in 6.3.2(a), but not to be taken as less than that obtained from the following formula:

$$2.4Kn\left[0.17 + \frac{h_1}{9.81h}\left(\frac{l_1}{l}\right)^2 - 0.1\frac{l}{h}\right]Sh\,l^2 \qquad cm^3$$

where:

K = Material factor as specified in 1.4.1(b)(i) of this Part.

n = Ratio of transverse web beam spacing to frame spacing.

h_1 = Deck load, in kN/m^2, stipulated in 9.2 of this Part for the deck beam at the top of frame.

l_1 = Total length, in m, of the transverse web beam.

S, l and h = As specified in 6.3.2(a) of this Chapter.

(c) Where the depth of the bottom center girder is less than B/16, the scantlings of frames are to be suitably increased.

6.3.3 Connection of transverse hold frames

(a) Transverse hold frames are to be overlapped with heel brackets by at least 1.5 times the depth of frame sections and are to be effectively connected thereto.

(b) The upper ends of transverse hold frames are to be effectively connected by brackets with the deck or deck beams, and where the deck at the top of frames is longitudinally framed, the upper end brackets are to be extended and connected to the deck longitudinals adjacent to the frames.

6.4 Side Longitudinals and Other Structural Members

6.4.1 Side longitudinals

(a) The section modulus of side longitudinals in the midship part below the freeboard deck is not to be less than that obtained from the following formulae, whichever is greater, and is not to be less than 30 cm^3:

$8.6Shl^2$ cm^3
$2.9K\sqrt{L}Sl^2$ cm^3

where:

K = Material factor as specified in 1.4.1(b)(i) of this Part.

S = Spacing, in m, of longitudinals.

l = Distance, in m, between the web frames or between the transverse bulkhead and the web frame including the length of connection.

h = Vertical distance, in m, from the side longitudinals to a point (d + 0.044L - 0.54) above the top of keel.

(b) Beyond the midship part, the section modulus of side longitudinals may be gradually reduced towards the ends of the ship, and may be 0.85 times that obtained from the formula in 6.4.1(a) above at the ends. However, the section modulus of side longitudinals between 0.15L from the fore end and the collision bulkhead is not to be less than that obtained from the formula in 6.4.1(a) above.

(c) The depth of flat bars used for longitudinals is not to exceed 15 times the thickness of flat bars.

(d) Side longitudinals on sheer strakes in the midship part are to be of a slenderness ratio not greater than 60.

(e) The section modulus of bilge longitudinals need not exceed that of bottom longitudinals.

6.4.2 The web frames supporting side longitudinals are to be arranged at an interval not exceeding 4.8 meters at sections where solid floors are provided.

(a) The scantlings of web frames are not to be less than that obtained from the following formulae:

Depth: 0.1l, in m, or 2.5 times the depth of the slot for longitudinals, whichever is greater.

Section modulus: KC_1Shl^2 cm^3

Thickness of web: $\frac{KC_2}{1000}\frac{Shl}{d_1} + 2.5$ mm

where:

K = Material factor as specified in 1.4.1(b)(i) of this Part.

S = Web frame spacing, in m.

l = Vertical distance, in m, from the top of inner bottom plating or single bottom floors at side to the deck at the top of web frames. However, where there are effective deck transverses, l may be measured up to the lower surface of such transverses.

d_0 = Depth, in m, of web frame. However, the depth of slots for side longitudinals is to be deducted from the web depth.

h = Vertical distance, in m, from the lower end of l to a point (d+0.044L-0.54) above the top of keel. However, where the distance is less than 1.43 l (m), h is to be taken as 1.43 l (m).

C_1, C_2 = As specified in Table XV 6-1 of this Chapter.

(b) Web frames are to be provided with tripping brackets at an interval of about three meters and stiffeners are to be provided on the webs at each longitudinal except for the middle part of the span of web frames where stiffeners may be provided at alternate longitudinals.

Table XV 6-1
Coefficients C_1 and C_2

	For web frames abaft 0.15 L from the fore end	For web frames between 0.15 L from the fore end and collision bulkhead
C_1	4.7	6.0
C_2	45	58

6.5 Tween Deck Frames

6.5.1 General

(a) The scantlings of tween deck frames are to be determined in relation to the strength of hold frames, the arrangement and transverse stiffness of bulkheads, etc.

(b) In the design of tween deck framing, considerations are to be given in conjunction with hold frames to the continuity of strength in the framing from the bottom to the top of the hull.

(c) The provisions in 6.5 are based on the standard structural arrangement so as to maintain transverse stiffness of the ship by means of efficient tween deck bulkheads provided above the hold bulkheads or by web frames extended to the top of superstructures at proper intervals.

6.5.2 Scantlings of tween deck frames

(a) The section modulus of tween deck frames is not to be less than that obtained from the following formula:

$CKSlL$ cm^3

where:

K = Material factor as specified in 1.4.1(b)(i) of this Part.

S = Frame space, in m.

l = Tween deck height, in m.

However, the height is to be taken as 1.8 (m) where it is less than 1.8 (m) for superstructure frames and as 2.15 (m) where the height is less than 2.15 (m) for others, respectively.

C = Coefficient given in Table XV 6-2 of this Chapter.

L = Length of ship as specified in 1.5.1 of this Part.

(b) The scantlings of tween deck frames below the freeboard deck within 0.125 L from the fore and after ends are to be appropriately increased above those given by 6.5.2(a) of this Chapter.

(c) Where decks are supported by longitudinal beams and transverse strong beams, the section modulus of tween deck strong frames which support beams is not to be less than that given in 6.5.2(a) and (b) above multiplied by the coefficient obtained from the following formula. In this case, the section modulus of tween deck frames between strong frames is not to be less than 0.85 times that given by 6.5.2(a) and (b) above and the upper ends are to be connected with brackets.

$1 + 0.2\,n$

where:

n = Number of tween deck frames between web frames.

Table XV 6-2
Coefficients C

Description of tween deck frames	C
Superstructure frames (excluding the following two items)	0.44
Superstructure frames for 0.125L from aft end	0.57
Superstructure frames for 0.125L from fore end and cant frames at stern	0.74
Tween deck frames between the freeboard deck and the second deck	0.74
Tween deck frames between the second deck and the third deck	0.89
Tween deck frames between the third deck and the fourth deck	0.97

6.5.3 Special precautions regarding tween deck frames

(a) Care is to be taken so that the strength and stiffness of framing at the ends of the ship may be increased in proportion to the actual unsupported length of frame as well as the vertical height of tween decks.

(b) In ships having an especially large freeboard, the scantlings of tween deck frames may be properly reduced.

6.5.4 Superstructure frames

(a) Superstructure frames are to be provided at every frame located below.

(b) Notwithstanding the requirements in 6.5.2 of this Chapter, superstructure frames for four frame spaces at the ends of bridges and of detached superstructures within 0.5 L amidships are to be of the section modulus obtained from the formula in 6.5.2 of this Chapter using 0.74 as the coefficient C.

(c) Web frames or partial bulkheads are to be provided above the bulkheads required by Chapter 15 of this Part or at other positions such as may be considered necessary to give effective transverse rigidity to the superstructures.

6.6 Frames in Fore and After Peaks

6.6.1 Transverse frames in fore peaks

The section modulus of transverse frames forward of the collision bulkhead is not to be less than that obtained from the following formula, and is not to be less than 30 cm^3:

$8SKhl^2$ cm^3

where:

K = Material factor as specified in 1.4.1(b)(i) of this Part.

S = Frame spacing, in m.

l = Distance, in m, between the supports of transverse.
However, where the height is less than 2 (m), it to be taken as 2 (m).

h = Vertical distance, in m, from the middle of l to a point 0.12 L above the top of keel

6.6.2 Longitudinals frames in fore peaks

The section modulus of longitudinals is not to be less than that obtained from the following formula. However, the modulus obtained from the formula is to be increased by 25% (between 0.05D and 0.15D from the top of the keel), and 50% (below 0.05D from the top of the keel).

$8SKhl^2$ cm^3

where:

K = Material factor as specified in 1.4.1(b)(i) of this Part.

S and l = As specified in 6.4.1 of this Chapter.

h = Vertical distance, in m, from the longitudinals to a point 0.12L above the top of keel, but is not to be less than 0.06 L in m

6.6.3 Transverse frames in after peaks

The section modulus of transverse frames below the freeboard deck abaft the after peak bulkhead is not to be less than obtained from the following formula, and is not to be less than 30 cm^3:

$8Shl^2$ cm^3

where:

S = Frame spacing, in m.

l = As specified in 6.3.2 of this Chapter, but to be taken as 2 meters where the height is less than 2 meters

h = Vertical distance, in m, from the midpoint of l to a point (d + 0.044 L – 0.54) above the top of keel

Chapter 7
Cantilever Beam Construction

7.1 Cantilever Beam Systems

7.1.1 The depth of cantilever beams measured at the toe of end brackets is not to be less than one-fifth of the horizontal distance from the inboard end of the cantilever beam to the toe of the end bracket at side.

7.1.2 The depth of cantilever beams may be gradually tapered from the toe of end brackets towards the inboard end where it may be reduced to about a half of the depth at the toe of the end bracket.

7.1.3 The section modulus of cantilever beams at the toe of end brackets is not to be less than that obtained from the following formula: (see Fig. XV 7-1 of this Chapter)

$$7.1Sl_0\left(\frac{1}{2}b_1h_1 + b_2h_2\right) \qquad \text{cm}^3$$

where:

S = Cantilever beam spacing, in m.

l_0 = Horizontal distance, in m, from the inboard end of cantilever beams to the toe of end brackets.

b_1 = Horizontal distance, in m, from the inboard end of cantilever beams to the toe of end brackets of beam or transverse deck girder at side. However, where the deck is framed longitudinally and no deck transverse is provided between the cantilever beams, b_1 is to be taken as l_0.

b_2 = A half of the breadth, in m, of the hatch opening in the deck supported by the cantilever beams.

h_1 = Deck load, in kN/m^2, stipulated in 12.1 for the deck transverses supported by the cantilever beams.

h_2 = Load, in kN/m^2, on hatch covers of the deck supported by the cantilever beams which is not to be less than obtained from 7.1.3(a) to (c) as follows, depending on the type of deck.

(a) For weather decks, h_2 is the deck load stipulated in 12.1.1(b) of this Part for the deck transverses or the maximum design cargo weight on hatches per unit area, in kN/m^2, whichever is greater. The value of y in 12.1.1(b) of this Part may be taken as the vertical distance from the designed maximum load line to the upper edge of the hatch coaming. In either case, h_2 is not to be less than 17.5 kN/m^2 for hatches at Position 1 and 12.8 kN/m^2 for those at Position 2 specified in Chapter 18, respectively.

(b) For decks other than the weather deck where ordinary cargoes or stores are intended to be carried, h_2 is the deck load stipulated in 12.1.1(a) of this Part.

(c) For decks other than those specified in (a) or (b) above, h_2 is the value equal to h_1.

7.1.4 The sectional area of face plates of cantilever beams may be gradually tapered from the inner edge of end brackets towards the inboard end of cantilever beams, where it may be reduced to 0.60 times that at the inner edge of the end brackets.

7.1.5 The web thickness of cantilever beams at any point is not to be less than the greater of the values obtained from the following formula:

$$t_1 = 0.0095\left(\frac{Sb_1h_1}{2d_c} + \frac{Sb_2h_2}{d_c}\right) + 2.5 \qquad \text{mm}$$

$$t_2 = 7.5d_c + 0.46t_1 + 1.5 \qquad \text{mm}$$

where:

S, b_1, b_2, h_1 and h_2	=	As specified in 7.1.3 of this Chapter. However, where the deck is framed longitudinally and no deck transverse is provided between the cantilever beams, $b_1/2$ is to be substituted by the horizontal distance in meters from the inboard end of cantilever beams to the section under consideration in the formula for t_1.
d_c	=	Depth, in m, of the cantilever beam at the section under consideration. However, in the calculation of t_1, the depth of slots for deck longitudinals, if any, is to be deducted from the depth of cantilever beams. Where the webs are provided with horizontal stiffeners, the divided web depth may be used for d_c in the formula for t_2.

7.1.6 Cantilever beams are to be provided with tripping brackets at an interval of about 3 m. Moreover, a stiffener is to be provided on the web at every longitudinal in the root of cantilever beams and at alternate longitudinals elsewhere.

7.1.7 Cantilever beams supporting hatch covers on lower decks are to comply with the requirements in following:

(a) The leg length of the fillet welds between webs and hatch side girders is to be Type 1 specified in Table XII 5-3 of Part XII.

(b) Where the stiffeners are provided to prevent web plates from buckling, consideration is to be given to the arrangement of the ends of such stiffeners to ensure that there are no stress concentrations at the connections between web plates and the members supporting hatch covers on lower decks.

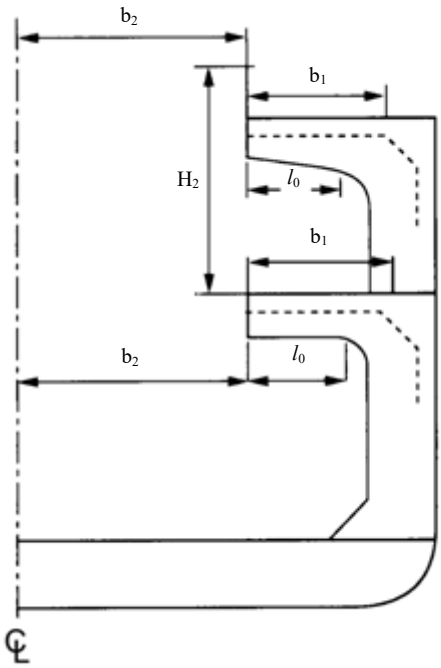

The loading height of cargo (H_2) is to be taken into consideration when h_2 of the lower deck is assumed.

Fig. XV 7-1
Measurement of l_0, b_1, b_2 and H_2

7.2 Web Frames

7.2.1 The depth of web frames is not to be less than one-eighth of the length including the length of connections at both ends.

7.2.2 The section modulus of web frames is not to be less than that obtained from the following formula. However, where a tween deck web frame in association with a cantilever beam supporting the deck above is provided at the top of the web frame, the value of the formula may be reduced to 60%.

$$7.1Sl_1\left(\frac{1}{2}b_1h_1 + b_2h_2\right) \qquad \text{cm}^3$$

where:

S = Web frame spacing, in m.

l_1 = Horizontal distance, in m, from the end of supported cantilever beams to the inside of web frames

b_1, b_2, h_1, h_2 = As specified in 7.1.3 of this Chapter for the supported cantilever beams. However, where the deck is framed longitudinally and no deck transverse is provided between the cantilever beams, l_1 is to be substituted for b_1.

7.2.3 The section modulus of tween deck web frames is to be in accordance with the requirements in 7.2.2 of this Chapter, and is not to be less than that obtained from the following formula:

$$7.1C_1Sl_1\left(\frac{1}{2}b_1h_1 + b_2h_2\right) \qquad cm^3$$

where:

S, l_1, b_1, b_2, h_1 and h_2 = As specified in 7.2.2 of this Chapter.

C_1 = $$0.15 + 0.5\left(\frac{\frac{1}{2}b_1'h_1' + b_2'h_2'}{\frac{1}{2}b_1h_1 + b_2h_2}\right)$$

b_1', b_2', h_1' and h_2' = b_1, b_2, h_1 and h_2 respectively stipulated in 7.2.2 above in respect to the cantilever beams provided below the web frames concerned.

7.2.4 The web thickness is not to be less than that obtained from the following formula, whichever is greater:

$$t_1 = 0.0095\frac{C_2S}{d_w}\left(\frac{1}{2}b_1h_1 + b_2h_2\right)\frac{l_1}{l} + 2.5 \qquad mm$$

$$t_2 = 7.5d_w + 0.46t_1 + 1.5 \qquad mm$$

where:

S, b_1, b_2, h_1, h_2, and l_1 = As specified in 7.2.2 of this Chapter.

d_w = The smallest depth, in m, of web frame.

However, in the calculation of t_1, the depth of slots for side longitudinals, if any, is to be deducted from the web depth. Where the depth of webs is divided by vertical stiffeners, the divided depth may be used for d_w in the calculation of t_2.

l = Length, in m, of web frame including the length of connections at both ends.

C_2 = Coefficient given below:

- For hold web frames:

  Where a web frame in association with a cantilever beam supporting the deck above is provided directly above: 0.9
  Elsewhere: 1.5

- For tween deck web frames: C_1+0.6, where C_1= Coefficient given by 7.2.3

7.2.5 Where web frames supporting cantilever beams also support side longitudinals or side stringers, the scantlings are to comply with the following requirements in addition to those in 6.4.2 of this Part.

(a) The section modulus is not to be less than that obtained from the formula in 7.2.2 of this Chapter, multiplied by the following coefficient:

Where tween deck web frame together with cantilever beam is provided above:

$$0.6 + 9.81\frac{0.05\mathrm{h}l^2 + 0.09\mathrm{h_u}l_\mathrm{u}^2}{1.4\left(\frac{1}{2}\mathrm{b_1h_1} + \mathrm{b_2h_2}\right)l_1}$$

Elsewhere: 1.0

where:

l	=	Length, in m, of hold web frame including the length of connections at both ends.
l_u	=	Length, in m, of tween deck web frame provided directly above, including the length of connections at both ends.
h	=	Vertical distance, in m, from the middle of l to a point d+0.038L above the top of keel.
h_u	=	Vertical distance, in m, from the middle of l_u to a point to which h is measured. However, where the point is below the middle of l_u , h_u is to be taken as zero.
b_1, b_2, h_1, h_2, and l_1	=	As specified in 7.2.2 of this Chapter.

(b) The web thickness is not to be less than that given by 7.2.4 of this Chapter, in which the value of t_1 is to be increased by the amount obtained from the following formula:

$$0.03\frac{\mathrm{Sh}l}{\mathrm{d_w}} \qquad \mathrm{mm}$$

where:

S	=	Web frame spacing, in m.
h, l	=	As specified in 7.2.5 (a) above.
d_w	=	As specified in 7.2.4 of this Chapter.

7.2.6 Tripping brackets are to be provided on the webs at an interval of about three meters, and stiffeners are to be provided on the webs at every side longitudinal at the ends of frames and at alternate longitudinals elsewhere.

7.2.7 Web frames are to be effectively connected with other web frames located beneath or bottom floors so as to maintain strength continuity.

7.3 Connection of Cantilever Beams to Web Frames

Cantilever beams and web frames supporting them are to be effectively connected by brackets required as follows:

7.3.1 The radius of curvature of the free edges of brackets is not to be less than the depth of cantilever beams at the toes of brackets.

7.3.2 The thickness of brackets is not to be less than that of the webs of cantilever beams or web frames, whichever is greater.

7.3.3 The brackets are to be properly strengthened by stiffeners.

7.3.4 The free edges of brackets are to have face plates of a sectional area not less than that of cantilever beams or web frames, whichever is greater, and the face plates are to be connected with those of cantilever beams and web frames.

Chapter 8
Shell Plating

8.1 General

8.1.1 Consideration for corrosion

The thickness of shell plating at such parts that the corrosion is considered excessive due to the location and/or special service condition of the ship is to be appropriately increased to exceed the required in this Chapter.

8.1.2 Special consideration for contact with wharf

Where the shell plating is prone to denting due to continual contact with the wharf, special consideration is to be given to the thickness of the shell plating.

8.1.3 Moving parts penetrating the shell plating

Moving parts penetrate the shell plating below the deepest subdivision draught is to be fitted with watertight sealing arrangement acceptable to the Society. Deepest subdivision draught is the draught which corresponds to the summer draught assigned to the ship. The inboard gland is to be located within a watertight space of such volume that, if flooded, the bulkhead deck is not to be submerged. The Society may require that if such a compartment is flooded, internal communication, essential or emergency power and lighting, signals or other emergency devices remain available in other parts of the ship.

8.2 Plate Keels

8.2.1 Breadth and thickness of plate keels

(a) The breadth of the plate keel over the whole length of the ship is not to be less than that obtained from the following formula:

$4.5L + 775$ mm

(b) The thickness of the plate keel over the whole length of the ship is not to be less than the thickness of the bottom shell obtained in accordance with requirement in 8.3.4 of this Chapter plus 1.5 mm. However, the thickness is not to be less than the thickness of the adjacent shell plating.

8.3 Shell Plating for Midship Part of Ship

8.3.1 Minimum thickness

The minimum thickness of shell plating below the strength deck for the midship part of ship is not to be less than that obtained from the following formula:

$0.044\,L + 5.6$ mm

8.3.2 Thickness of side shell plating

The thickness of side shell plating other than the sheer strake at the strength deck for the midship part of ship is not to be less than that obtained from the following formula:

$4.1S\sqrt{d + 0.04L} + 2.5$ mm

where:

S = Spacing, in m, of longitudinal or transverse frames.

8.3.3 Sheer strakes

The thickness of sheer strakes at the strength deck is not to be less than 0.75 times that of the stringer plate of the strength deck. However, the thickness is not to be less than that of the adjacent side shell plating.

8.3.4 Thickness of bottom shell plating

The thickness of bottom shell plating (including bilge strake and excluding keel plate) for the midship part of ship is to meet the requirements in the following (a) and (b).

(a) In ships with transverse framing, the thickness is not to be less than that obtained from the following formula:

$$4.7S\sqrt{d + 0.035L} + 2.5 \quad \text{mm}$$

where:
S = Spacing, in m, of transverse frames.

(b) In ships with longitudinal framing, the thickness is not to be less than that obtained from the following formula.

$$4S\sqrt{d + 0.035L} + 2.5 \quad \text{mm}$$

where:
S = Spacing, in m, of longitudinal frames.

8.4 Shell Plating for End Parts

8.4.1 Shell plating for end parts

Beyond the midship part, the thickness of shell plating below the strength deck may gradually decrease, but at the end parts the thickness is not to be less than that calculated by the following formula. However, for the parts specified in 8.4.2 to 8.4.5 as below, the thickness is not to be less than that required in the respective provisions.

$$0.044L + 5.6 \quad \text{mm}$$

8.4.2 Shell plating for 0.3L from the fore end

The thickness of shell plating for 0.3L from the fore end is not to be less than that obtained from the following formula:

$$1.34S\sqrt{L} + 2.5 \quad \text{mm}$$

where:
S = Spacing, in m, of longitudinal or transverse frames.

8.4.3 Shell plating for 0.3L from the after end

The thickness of shell plating for 0.3L from the after end is not to be less than that calculated by the following formula. In ships with machinery aft or in ships with powerful engines, the thickness is to be appropriately increased:

$$1.20S\sqrt{L} + 2.5 \quad \text{mm}$$

where:
S = Spacing, in m, of longitudinal or transverse frames.

8.4.4 Shell plating of bottom forward

The thickness of shell plating at the strengthened bottom forward specified in Chapter 9 of this Part is to meet the requirements in the following (a), (b) and (c). Where the ship has an unusually small draught at the ballast condition and has especially high speed for the ship's length, special consideration is to be paid to the thickness of shell plating.

(a) For ships with a bow draught not exceeding 0.025L at the ballast conditions, the thickness of shell plating at the strengthened bottom forward is not to be less than the value calculated by the following formula:

$$CS\sqrt{KP} + 2.5 \quad \text{mm}$$

where:

K = Material factor as specified in 1.4.1(b)(i) of this Part.
C = Coefficient give in Table XV 8-1 as below.
For intermediate values of α, C is to be obtained by linear interpolation.
S = Spacing, in m, of frames, girders or longitudinal shell stiffeners, whichever is the smallest.
α = Value, in m, of the spacing of frames, girders or longitudinal shell stiffeners, whichever is the greatest divided by S.
P = Slamming impact pressure, in kPa, specified in Chapter 9 of this Part.

Table XV 8-1
Value of C

α	1.0	1.2	1.4	1.6	1.8	2.0 and above
C	1.04	1.17	1.24	1.29	1.32	1.33

(b) At the ballast condition, where ships having a bow draught of not less than 0.037 L, the thickness of shell plating at the strengthened bottom forward may be of thickness in accordance with 8.4.1 and 8.4.2 above.

(c) In ships having an intermediate value of the bow draught specified in (a) and (b) above, the thickness is to be obtained by linear interpolation from the requirements in (a) and (b) above.

8.4.5 Shell plating adjacent to stern frames or in way of spectacle bossing

The thickness of shell panel adjacent to the stern frame or in way of spectacle bossing is not to be less than the thickness calculated by the following formula:

$4.5 + 0.09L$ mm

8.5 Side Plating in way of Superstructure

8.5.1 Side plating in way of superstructure deck designed as a strength deck

When the superstructure deck is designed as a strength deck, the thickness of the superstructure side plating is to be in compliance with the provisions of 8.3.1, 8.3.2 and 8.4.1 to 8.4.3 of this Chapter. However, the thickness of the superstructure side plating at end parts may be specified in 8.5.2 below.

8.5.2 Side plating in way of superstructure deck not designed as a strength deck

Where the superstructure deck is not designed as a strong deck, the thickness of the superstructure side plating is not to be less than obtained from the following formula, but it is not to be less than 5.5 mm.
For 0.25L abaft the fore end:

$1.15S\sqrt{L} + 2.0$ mm

Elsewhere:

$0.94S\sqrt{L} + 2.0$ mm

where:
S = Spacing, in m, of longitudinal or transverse frames at the position.

8.5.3 Compensation at ends of superstructure

Side plating at the ends of superstructure is to be suitably constructed to maintain the continuity of strength.

8.6 Local Compensation of Shell Plating

8.6.1 Openings in shell

All openings in the shell plating are to have their corners well rounded and be compensated as necessary.

8.6.2 Recesses

Where the recesses are provided in the shell plating for suction or discharge, the thickness of the recesses is not to be less than obtained from the following formula and be suitably stiffened so as to provide sufficient rigidity as necessary.

$5.0 + 0.07L$ mm

8.6.3 Shell plating at and below hawse pipes

The shell plating fitted with hawse pipes and the plating below them is to be increased in thickness or be doubled, and be constructed so that their longitudinal seams are not damaged by anchors or anchor cables.

Chapter 9

Strengthening of Bottom Structure Forward

9.1 General

9.1.1 In ships having a bow draught under 0.037L in ballast condition, the construction of the strengthened bottom forward is to be in accordance with the requirements in this Chapter.

9.1.2 In ships having an unusually small draught in the ballast condition and that have especially high speed for the ship's length, special attention is to be paid to the construction of the strengthened bottom forward.

9.1.3 The part of the flat bottom forward from the position specified in Table XV 9-1 as below is defined as the strengthened bottom forward. However, ships that have an especially small draught in ballast condition or where C_b is especially small are to have the strengthened bottom forward extended to the satisfaction of the Society.

Table XV 9-1
After End of Range of Strengthened Bottom Forward

$\alpha = \frac{V}{\sqrt{L}}$	$\alpha \leq 1.1$	$1.1 < \alpha \leq 1.25$	$1.25 < \alpha \leq 1.4$	$1.4 < \alpha \leq 1.5$	$1.5 < \alpha \leq 1.6$	$1.6 < \alpha \leq 1.7$	$\alpha > 1.7$
Position (from the fore side of stem)	0.15L	0.175L	0.2L	0.225L	0.25L	0.275L	0.3L

9.2 Construction

9.2.1 Between the collision bulkhead and 0.05L abaft the after end of the strengthened bottom forward, full or half-height girders are to be provided in accordance with Table XV 9-2 as below. Where transverse framing is adopted between the collision bulkhead and 0.025L abaft the after end of the strengthened bottom forward, half-height girders or shell stiffeners are to be provided in accordance with Table XV 9-2 as below.

9.2.2 Between the collision bulkhead and the after end of the strengthened bottom forward, solid floors are to be provided in accordance with Table XV 9-2 as below.

9.2.3 The solid floors are to be strengthened by providing vertical stiffeners in way of half-height girders or longitudinal shell stiffeners, except where the longitudinal shell stiffeners are spaced especially close and the solid floors are adequately reinforced, the vertical stiffeners for the solid floors may be provided on alternate shell stiffeners.

9.2.4 In ship having a bow draught of more than 0.025L but less than 0.037L in ballast condition, where the construction and arrangement of the strengthened bottom forward are impracticable to comply with the requirements in 9.2.1 to 9.2.2 above, suitable compensation is to be provided for the floors and side girders.

Table XV 9-2
Construction of Strengthened Bottom Forward

Side / Members / Double Bottom		Side Girder	Half-height Girders or Shell Stiffeners	Solid Floors
Transverse framing	Transverse framing	To be provided at intervals within 2.5 m	To be provided between side girders	To be provided at every frame
	Longitudinal framing			To be provided at intervals within 2.5 m
Longitudinal framing	Transverse framing	To be provided at intervals within 2.5 m	-	To be provided at alternate frame
	Longitudinal framing			To be provided at intervals within 2.5 m

9.2.5 In ships having a bow draught of not more than 0.025L in ballast condition, the section modulus of longitudinal shell stiffeners or bottom longitudinals in way of the strengthened bottom forward is not to be less than that obtained from the following formula:

$0.53KP\lambda l^2$ cm^3

where:

K = Material factor as specified in 1.4.1(b)(i) of this Part.

l = Spacing, in m, of solid floors.

λ = 0.774 l

However, where the spacing of longitudinal shell stiffeners or bottom longitudinals is not more than 0.774 l, λ is to be taken as the spacing.

P = $2.48\frac{LC_1C_2}{\beta}$ kPa

Slamming impact pressure, where C_1 and C_2 given in Table XV 9-3 as below.

For intermediate values of $V/\sqrt{L}$, C_1 is to be obtained by linear interpolation.

β = Slope of the ship's bottom obtained from the following formula, but C_2 / β need not be taken as greater than 11.43 (See Fig. XV 9-1 as below)

$$\frac{0.0025L}{b}$$

where:

b = Horizontal distance measured at 0.2L from the stem, from the center line of the ship to the intersection of the horizontal line 0.0025L above the top of the keel with the shell plating, in m (See Fig. XV 9-1 as below).

Table XV 9-3
Values of C_1 and C_2

α	α ≤1.0	1.1	1.2	1.3	1.4	α ≥1.5
C_1	0.12	0.18	0.23	0.26	0.28	0.29
α	α ≤1.0	1.0<α<1.3		α ≥1.3		
C_2	0.4	$0.667\alpha - 0.267$		$1.5\alpha - 1.35$		
Note: $\alpha = V/\sqrt{L}$						

9.2.6 In ships having a bow draught of more than 0.025L but less than 0.037L in ballast condition, the section modulus of longitudinal shell stiffeners or bottom longitudinals in way of the strengthened bottom forward is to be obtained by linear interpolation from the values given by the requirements of above-mentioned in 9.2.5 above and 5.6 of this Part.

Hull section at the station 0.2L from the stem

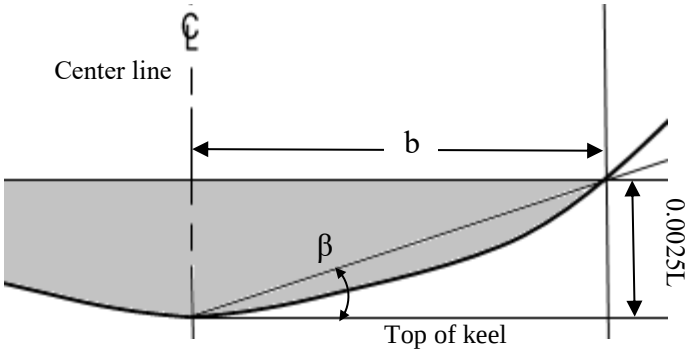

Fig. XV 9-1
Measurement of b

Chapter 10

Beams

10.1 General

10.1.1 Camber of weather deck

The standard camber of weather deck is B/50 at midship.

10.1.2 Connections of ends of beams

(a) Longitudinal beams are to be continuous or to be connected with brackets at their ends in such a manner as to effectively uphold the sectional area and to have sufficient strength to withstand bending and tension.

(b) Transverse beams are to be connected to frames by brackets.

(c) Transverse beams provided at positions where frames are omitted in tween decks or superstructures, are to be connected to the side plating by brackets.

(d) Transverse beams on decks (boat decks, promenade decks, etc.) may be connected at their ends by clips.

10.1.3 Transition from longitudinal beam to transverse beams system

Special care is to be taken to keep the continuity of strength in parts where longitudinal beam system changes to a transverse beam system.

10.2 Longitudinal Beams

10.2.1 Spacing

The standard spacing of longitudinal beams is obtained from the following formula:

$2L + 550$ mm

10.2.2 Proportion

(a) Longitudinal beams are to be supported by deck transverses of appropriate spacing. The slenderness ratio of deck longitudinals in the strength deck of the midship part is not to exceed 60. However, this requirement may be suitably modified where longitudinal beams are given sufficient strength to prevent buckling.

(b) Flat bars used for longitudinals are not to be of a depth-thickness ratio exceeding 15.

10.2.3 Section modulus of longitudinal beams

(a) The section modulus of longitudinal beams outside the line of openings of the strength deck for the midship part is not to be less than that obtained from the following formula:

$1.14\ SKhl^2$ cm^3

where:

K = Material factor as specified in 1.4.1(b)(i) of this Part.

S = Spacing (m) of longitudinal beams.

h = Deck loads (kN/m^2) specified in 12.1 of this Part.

l = Horizontal distance (m) between bulkhead and deck transverse or between deck transverses

(b) The coefficient in formula in 10.2.3(a) above may be gradually reduced for longitudinal beams outside the line of openings of the strength deck for parts forward and afterward of the midship part. However, the section modulus is not to be less than that obtained from the following formula:

$0.43SKhl^2$ cm^3

where:

S, K, h and l = As specified in 10.2.3(a) above.

The section modulus of longitudinal beams for parts other than those stipulated in 10.2.3(a) and 10.2.3(b) above is not to be less than that obtained from the formula in 10.2.3(b) above.

10.2.4 Deck transverses supporting longitudinal beams

In single deck ships, the deck transverse are to be provided in line with the solid floors in the bottom. In two deck ships, the transverses are also to be provided in line with the solid floors in the double bottom as far as is practicable.

10.3 Transverse Beams

10.3.1 Arrangement of transverse beams

Transverse beams are to be provided on every frame.

10.3.2 Proportion

It is preferable that the length/-depth ratio of transverse beams be 30 or less at the strength deck, and 40 or less at effective decks (the decks below the strength deck which are considered as strength members in the longitudinal strength of the hull) and superstructure decks as far as practicable.

10.3.3 Section modulus of transverse beams

The section modulus of transverse beams is not to be less than that obtained from the following formula:

$0.43\ SKhl^2$ cm^3

where:

K = Material factor as specified in 1.4.1(b)(i) of this Part.

S = Spacing (m) of transverse beams.

h = Deck load (kN/m^2) specified in 12.1 of this Part.

l = Horizontal distance (m) from the inner edge of beam brackets to the longitudinal deck girder, or between the longitudinal deck girders

10.4 Beams on Bulkhead Recesses and Others

10.4.1 Section modulus

The section modulus of beams at deck forming the top of bulkhead recesses, tunnels and tunnel recesses is not to be less than that obtained from the formula in 15.2.8 of this Part.

10.5 Beams on top of Deep Tanks

10.5.1 Section modulus

The section modulus of beams at deck forming the top of deep tanks is to be in accordance with this Chapter, and not to be less than that obtained from the formula in 17.2.3 of this Part, taking the top of deck beams as the lower end of h and beams as stiffeners.

10.6 Deck Beams Supporting Especially Heavy Loads

10.6.1 Reinforcement of deck beams

The deck beams supporting especially heavy loads or arranged at the ends of superstructures or deckhouses, in way of masts, winches, windlasses and auxiliary machinery, etc. are to be properly reinforced by increasing the scantlings of the beams, or by the addition of deck girders or pillars.

10.7 Deck Beams Supporting Vehicles

10.7.1 Section modulus of beams

The section modulus of beams of decks loaded with wheeled vehicles is to be determined by considering the concentrated loads from the wheeled vehicles.

10.8 Deck Beams Supporting Unusual Cargoes

10.8.1 Section modulus of beams

The section modulus of beams of decks carrying cargo loads which can not be treated as evenly distributed loads is to be determined by taking into account the load distribution of each particular cargo.

Chapter 11
Deck Girders and Pillars

11.1 General

11.1.1 Application of deck girders

Transverse deck girders supporting longitudinal deck beams and longitudinal deck girders supporting transverse deck beams are to be in accordance with the requirements in this Chapter.

11.1.2 Arrangement of deck girders

In way of the bulkhead recesses and the top of tanks, deck girders are to be arranged at intervals not exceeding 4.6 metres as far as practicable.

11.1.3 Construction of deck girders

(a) Deck girders are to be composed of face plates provided along the lower edge.

(b) Tripping brackets are to be provided at intervals of about 3 metres and where the breadth of face plates exceeds 180 mm on either side of the girder, these brackets are to be so arranged as to support the face plates as well.

(c) The thickness of face plates forming girders is not to be less than that of web plates and the width of the face plates is not to be less than that obtained from the following formula:

$85.4\sqrt{d_0 l}$ mm

where:

d_0 = Depth (m) of girders

l = Distance (m) between the supports of girders

However, if effective tripping brackets are provided, they may be taken as supporting points.

(d) The depth of girders between bulkheads is to be kept constant between two adjacent bulkheads, and not to be less than 2.5 times that of the slots for beams.

(e) The girders are to have sufficient rigidity to prevent excessive deflection of decks and excessive additional stresses in deck beams.

11.1.4 End Connection of deck girders

(a) End connections of deck girders are to be in accordance with the requirements in 1.4.4 of this Part.

(b) Bulkhead stiffeners or girders at the ends of deck girders are to be suitably strengthened to support deck girder.

(c) Longitudinal deck girders are to be continuous or to be effectively connected so as to maintain the continuity at ends.

11.1.5 Tween deck pillars

Tween deck pillars are to be arranged directly above those in the holds, or effective means are to be provided for transmitting their loads to the supports below.

11.1.6 Pillars in hold

Pillars in hold are to be provided in line with the single or double bottom girders or as close thereto practicable, and the structures above and under where the pillars are connected are to be of ample strength to provide effective distribution of the load.

11.1.7 End connection of pillars

The head and heel of pillars are to be secured by thick doubling plates and brackets as necessary. For pillars which may be subject to tensile loads in locations such as under bulkhead recesses, tunnel tops or deep tank tops, the head and heel of the pillars are to be efficiently secured to withstand these loads.

11.1.8 Reinforcement of structures connected to pillars

Where the pillars are connected to the deck plating, the top of shaft tunnels, or the frames, those structures are to be efficiently strengthened.

11.2 Longitudinal Deck Girders

11.2.1 Section modulus of girders

(a) The section modulus of longitudinal deck girders outside the lines of hatchway openings of the strength deck for the midship part is not to be less than that obtained from the following formula:

$1.29\ K\ l\ (l\ bh + kw)$ cm^3

where:

K = Material factor as specified in 1.4.1(b)(i) of this Part.

l = Distance (m) between the centres of pillars or from the centre of the pillar to the bulkhead where deck girders are fixed to the bulkhead by effective brackets, l may be modified as specified in 1.4.5 of this Part. (See Fig. XV 11-1 as below)

b = Distance (m) between the centres of two adjacent spans of beams supported by girders or frames (See Fig. XV 11-1 as below)

h = Deck load (kN/m^2) specified in 12.1 of this Part

w = Deck load (kN) supported by the tween deck pillar as specified in 11.7 of this Chapter.

k = As specified in the following (i) and (ii):

(i) Coefficient obtained from the following formula according to the ratio of the horizontal distance (m) from the pillar or bulkhead supporting the deck girder to the tween deck pillar a and l. (See Fig. XV 11-1 as below)

$$12\frac{a}{l}\left(1-\frac{a}{l}\right)^2$$

(ii) Where there is only one tween deck pillar, k is to be obtained by measuring a from the closest pillar or bulkhead. Where there are two or more tween deck pillars, a is to be measured from the same end of l for each tween deck pillar, and sum of kw is to be used for the calculation of the formula. In this case, the greater value of kw is to be used.

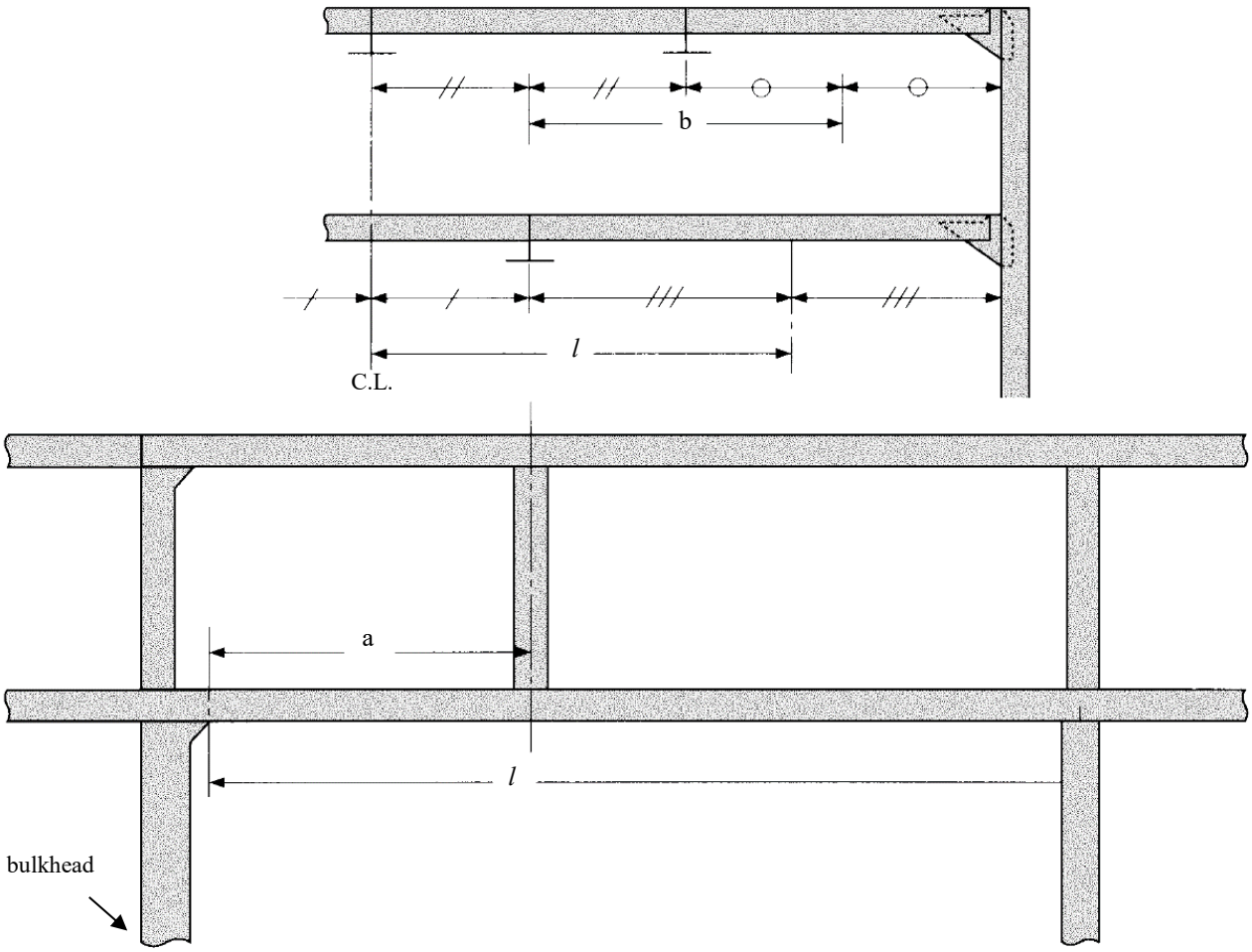

Fig. XV 11-1
Measurement of *l*, a and b

(b) The section modulus may be gradually reduced for longitudinal deck girders outside the line of openings of the strength deck for the parts forward and afterward of the midship part. However, the section modulus is not to be less than that obtained from the following formula under any circumstances:

$0.484Kl\ (lbh + kw)$ cm^3

where:
K, *l*, b, h, w and k = As specified in 11.2.1(a) above.

(c) The section modulus of longitudinal deck girders for parts other than that stipulated in 11.2.1(a) and 11.2.1(b) above is not to be less than that obtained from the formula in 11.2.1(b) above.

(d) The section modulus of longitudinal deck girders of decks carrying cargoes which can not be treated as evenly distributed loads is to be determined by taking into account the load distribution of each other particular cargo. Where cargo loads can be treated as concentrated loads acting on specific points, the provisions of 11.2.1(a) to 11.2.1(c) above may be applied so that such concentrated loads are treated as deck loads supported by the upper tween deck pillars (w).

11.2.2 Moment of inertia of girders

It is advised that the moment of inertia of girders is not to be less than that obtained from the following formula:

CZl cm^4

where:

C = Coefficient obtained from the followings:

For deck girders arranged outside the line of deck openings of strength deck of midship part of ship: 1.6

For other deck girders: 4.2

Z = Required section modulus (cm^3) of girders specified in 11.2.1 of this Chapter

l = As specified in 11.2.1(a) of this Chapter

11.2.3 Thickness of web plates

(a) The thickness of web plates is not to be less than that obtained from the following formula:
Longitudinal girders under strength deck outside the line of openings in midship part:

$$10S_1\sqrt{f_{DH}} + 2.5 \quad \text{mm}$$

Other longitudinal and transverse girders:

$$10S_1 + 2.5 \quad \text{mm}$$

where:

f_{DH} = Ratio of the section modulus of transverse section of hull at deck according to the requirements in Chapter 3 when mild steel is used to the actual section modulus of hull at strength deck. Where the ratio is less than 0.79/K, f_{DH} is to be assumed as 0.79/K

K = Material factor as specified in 1.4.1(b)(i) of this Part.

S_1 = Spacing (m) of web stiffeners or depth of girders, whichever is smaller

(b) The thickness of web plates at both end parts for 0.2l is not to be less than that specified in 11.2.3(a) above and obtained from the following formula, whichever is greater.

$$\frac{4.43K}{1000}\frac{bhl}{d_0} + 2.5 \quad \text{mm}$$

where:

d_0 = Depth of girder (m)

K, b, h and l = As specified in 11.2.1(a) of this Chapter

(c) The thickness of web plates provided in the deep tanks is to be 1 mm thicker than that those obtained from the formulae in 11.2.3(a) and 11.2.3(b) above.

11.3 Transverse Deck Girders

11.3.1 Section modulus of girders

(a) The section modulus of transverse deck girders is not to be less than that obtained from the following formula:

$$0.484Kl\,(lbh + kw) \quad cm^3$$

where:

K = Material factor as specified in 1.4.1(b)(i) of this Part.

l = Distance (m) between the centres of pillars or from the centre of the pillar to the inner edge of the beam bracket

b = Distance (m) between the centres of two adjacent girders or from the centre of the girder to the bulkhead

h = Deck load specified in 12.1 (kN/m^2)

w and k = In accordance with 11.2.1(a) of this Chapter.

(b) The section modulus of transverse deck girders of decks carrying cargoes which can not be treated as evenly distributed loads is to be determined by taking into account the load distribution of each particular cargo. Where cargo loads can be treated as concentrated loads acting on specific points, the provisions of 11.3.1(a) above may be applied so that such concentrated loads are treated as deck loads supported by the upper tween deck pillars (w).

11.3.2 Moment of inertia of girders

It is advised that the moment of Inertia of girders is not to be less than that obtained from the following formula:

$4.2Zl$ cm^4

where:

Z = Required section modulus (cm^3) of girders specified in 11.3.1 above

l = As specified in 11.3.1 above

11.3.3 Thickness of web plates

The thickness of web plates is to be in accordance with the requirements in 11.2.3 of this Chapter.

11.4 Deck Girders in Tanks

11.4.1 Section modulus of girders

The section modulus of deck girders in tanks is to be in accordance with the requirements in 11.2.1 or 11.3.1 of this Chapter, and the requirements in 17.2.4(a) of this Part.

11.4.2 The moment of inertia of girders

The moment of inertia of girders in tanks is to be in accordance with the requirements in 17.2.4(b) of this Part.

11.4.3 Thickness of web plates

The thickness of web plates is to be in accordance with the requirements in 11.2.3 or 11.3.3 of this Chapter, and the requirements in 17.2.4(c).

11.5 Hatch Side Girders

11.5.1 Girders having deep coamings on decks

Where deep coamings are provided on decks as in the case of hatchway on weather decks, the horizontal coaming stiffener and the coaming up to its stiffener may be included in the calculation of the section modulus, subject to the approval by the Society.

11.5.2 Strength continuity at hatchway corners

At hatchway corners, the face plates of hatch coamings and longitudinal deck girders or their extensions and the face plates on both sides of hatch end girders are to be effectively connected so as to maintain strength continuity.

11.6 Hatch End Beams

11.6.1 Scantlings of hatch end beams

The scantlings of hatch end beams are to be in accordance with the requirements in 11.3 and 11.4 of this Chapter.

11.7 Scantlings of Pillars

11.7.1 Sectional area of pillars

The sectional area of pillars is not to be less than that obtained from the following formula:

$$\frac{0.223wK}{2.72 - \frac{l}{k_0\sqrt{K}}} \quad \text{cm}^2$$

where:

K = Material factor as specified in 1.4.1(b)(i) of this Part.

l = Distance (m) from the top of inner bottom, deck or other structures on which the pillars are based to the underside of beam or girder supported by the pillars (See Fig. XV 11-2 of this Chapter)

$k_0 = \sqrt{\frac{I}{A}}$

Where:

I = The least moment of inertia (cm^4) of the pillar

A = Sectional area (cm^2) of the pillar

w = Deck load (kN) supported by pillars as specified in 11.7.2 of this Chapter

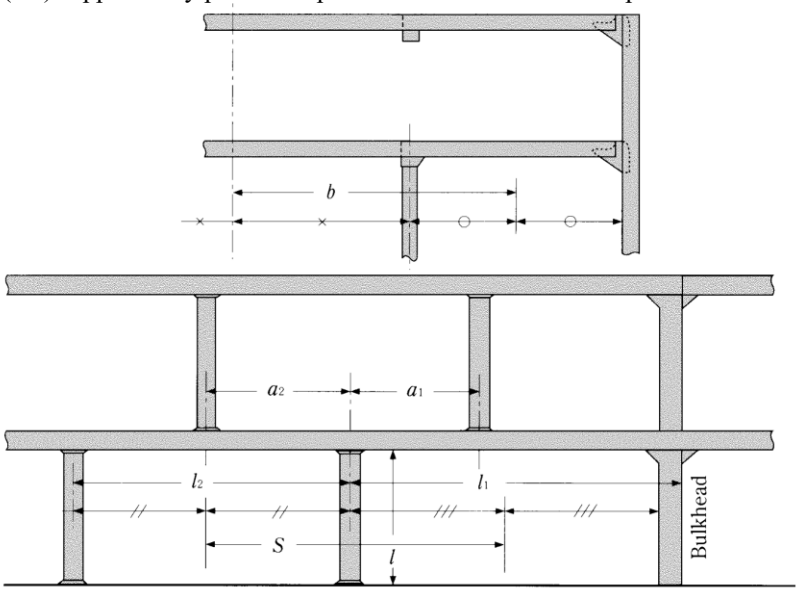

Fig. XV 11-2
Measurement of S, b, *l*, etc.

11.7.2 Deck load supported by pillars

(a) Deck load w supported by pillars is not to be less than that obtained from the following formula:

kw_0+Sbh kN

where:

S = Distance (m) between the mid-points of two adjacent spans of girders supported by the pillars or the bulkhead stiffeners or bulkhead girders. (See Fig. XV 11-2 above)

b = Mean distance (m) between the mid-points of two adjacent spans of beams supported by the pillars or the beam brackets. (See Fig. XV 11-2 above)

h = Deck load (kN/m^2) specified in 12.1 of this Part for the deck under consideration

w_0 = Deck load (kN) supported by the upper tween deck pillar

k = As obtained from the following formula:

$= 2(\frac{a_i}{l_i})^3 - 3(\frac{a_i}{l_i})^2 + 1$

a_i = Horizontal distance (m) from the pillars to the tween deck pillars above

l_i = Span (m) of girder supporting the tween deck pillar or bulkhead (See Fig. XV 11-2 above)

(b) Where there are two or more tween deck pillars provided on the deck girder supported by a line of lower pillars, the lower pillars are to be of the scantling required in 11.7.2(a), taking kw_0 for each tween deck pillar provided on two adjacent spans supported by the lower pillars.

(c) Where tween deck pillars are located athwartships from the lower pillars, the scantlings of the lower pillars are to be determined by applying the same principles as in 11.7.2(a) and 11.7.2(b) of this Chapter.

(d) The load supported by pillars of decks carrying cargoes which can not be treated as evenly distributed loads is to be determined by taking into account the load distribution of each particular cargo. Where cargo loads can be treated as concentrated loads acting on specific points, the provisions of 11.7.2(a) and 11.7.2(b) above may be applied so that such concentrated loads are treated as deck loads supported by the upper tween deck pillars (w_0).

11.7.3 Thickness of plates

(a) The plate thickness of tubular pillars is not to be less than that obtained from the following formula:

$0.022d_p + 4.6$ mm

where:

d_p = Outside diameter (mm) of the tubular pillar.

However, this requirement may be suitably modified for pillars provided in accommodation spaces.

(b) The thickness of web and flange plate of built-up pillars is to be sufficient for the prevention of local buckling.

11.7.4 Outside diameters of round pillars

The outside diameter of solid round pillars and tubular pillars is not to be less than 50 mm.

11.7.5 Pillars provided in deep tanks

(a) Pillars provided in deep tanks are not to be tubular pillars.

(b) The sectional area of pillars is not to be less than that specified in 11.7.2(a) above or obtained from the following formula:

1.09 Sbh cm^2

where:

S and b = As specified in 11.7.2(a) above.

h = 0.7 times the vertical distance (m) from the top of the deep tank to the point of 2.0 metres above the top of the overflow pipe (m).

11.8 Bulkheads in lieu of Pillars

11.8.1 Construction

The transverse bulkheads supporting longitudinal deck girders and the longitudinal bulkheads provided in lieu of pillars are to be stiffened in such a manner as to provide supports not less effective than that required for pillars.

11.9 Casing provided in lieu of Pillars

11.9.1 Construction

The casings provided in lieu of pillars are to be of sufficient scantlings to withstand the deck load and side pressure.

Chapter 12

Decks

12.1 Value of Deck Load h

12.1.1 Value of h

(a) Deck load h (kN/m^2) for decks intended to carry ordinary cargoes or stores is to be in accordance with the following (i) through (iii).

(i) The standard value (kN/m^2) for h is given by taking 7 times the tween deck height (m) at side of the space or the height (m) from the deck concerned to the upper edge of the hatch coaming of the deck above as the height of the cargo and multiplying it by 7. However, h may be specified as the maximum design cargo weight per unit area of deck (kN/m^2). In this case, the value of h is to be determined by considering the height of the loaded cargo.

(ii) Where timber and/or other cargoes are intended to be carried on the weather deck, h is to be the maximum design cargo weight per unit area of deck (kN/m^2), or the value specified in 12.1.1(b) of this Chapter, whichever is greater.

(iii) Where cargoes are suspended from the deck beams or deck machinery is installed, h is to be suitably increased.

(b) Deck load h (kN/m^2) for the weather deck is to be as specified in the following (i) to (iv).

(i) For the freeboard decks, superstructure deck and top of deckhouses on the freeboard deck, h is not to be less than that obtained from the following formula:

$a(0.067bL - y)$ kN/m^2

Where:

a and b = As given by Table XV 12-1 as below according to the position of decks.

However, where C_b is less than 0.7, value of b may be suitably modified.

Table XV 12-1
Values of a and b

Column	Position of Deck	a				b
		Deck plating	Beams	Pillars	Deck girders	
I	Forward of 0.15L abaft the fore end	14.7	9.80	4.90	7.35	1.42
II	Between 0.15L and 0.3L abaft the fore end	11.8	7.85	3.90	5.90	1.20
III	Between 0.3L abaft the fore end and 0.2L afore the aft end	6.90	4.60	2.25	2.25(1) 3.45(2)	1.00
IV	Afterward of 0.2L afore the aft end	9.80	6.60	3.25	4.90	1.15

Notes:

(1) For longitudinal deck girders outside the line of hatchway openings of the strength deck for the midship part.

(2) For deck girders other than those specified in (1) above.

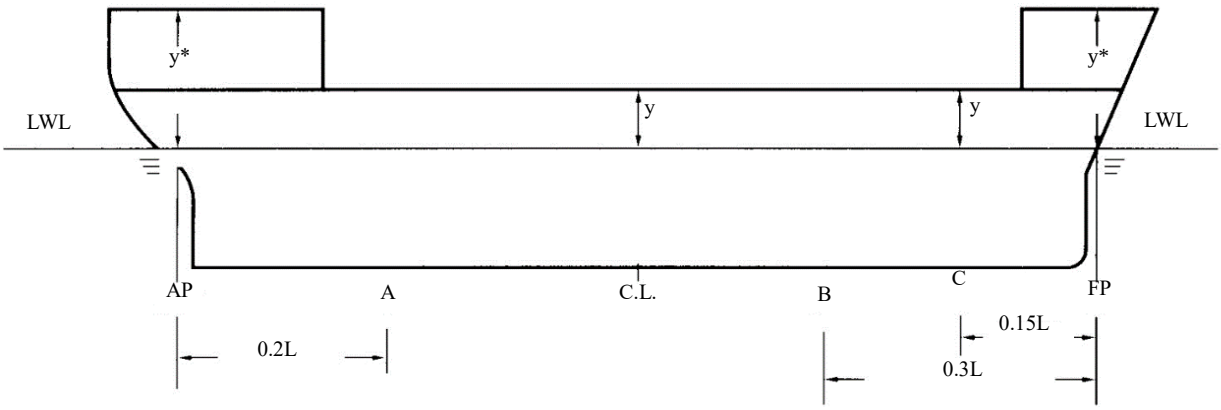

Notes:

(1) Abaft A y is measured at AP

Between A and B y is measured at C.L.

Between B and C y is measured at C

Afore C y is measured at FP

(2) In case of no superstructure, y is the distance to the upper deck.

Fig. XV 12-1
Position of Measuring y

y: Vertical distance from the designed maximum load line to the weather deck at side (m), and y is to be measured at fore end for deck forward of 0.15L abaft the fore end; at 0.15L abaft the fore end for deck between 0.3L and 0.15L abaft the fore end; at midship for deck between 0.3L abaft the fore end and 0.2L afore that aft end; and at aft end for deck afterward of 0.2L afore the aft end. (See Fig.XV 12-1 above)

(ii) h for the deck given in Column II in Table XV 12-1 above does not need to exceed that in Column I.

(iii) Notwithstanding the provision in (i) and (ii), h is not to be less than obtained from the formulae given by Table XV 12-2 as below However, where the h value calculated from the formula in Table XV 12-2 as below is less than 12.8, the h value is to be taken as 12.8.

(iv) Value of h may be suitably modified where the ship has an unusually large freeboard.

(c) On the first and second tiers above the freeboard deck, h is to be 12.8 for enclosures of superstructure decks and of top of deckhouses in accommodation or navigation spaces.

Table XV 12-2
Minimum Value of h

Column	Position of deck	h	C		
			beams	Pillars, Longitudinal and transverse deck girders	Deck plating
I and II	Forward of 0.3L abaft the fore end	$C\sqrt{L+50}$	2.85	1.37	4.20
III	Between 0.3L abaft the fore end and 0.2L afore the aft end		1.37	1.18	2.05
IV	Afterward of 0.2L afore the aft end	$C\sqrt{L}$	1.95	1.47	2.95
Second tier superstructure deck above the freeboard deck			1.28	0.69	1.95

12.2 General

12.2.1 Steel deck plating

Decks are to be plated from side to side of the ship except where there are specialized deck openings. However, decks may be of only stringer plates and tie plates, subject to the approval by the Society.

12.2.2 Watertightness of decks

(a) Weather decks, except where hatchway and other openings specified in Chapter 19 are provided, are to be made watertight.

(b) Special consideration is to be given to the water influx to the compartments under the bulkhead deck on ro-ro spaces.

(c) Special consideration is to be given to maintaining watertightness where the decks are required to be watertight in compliance with the requirements of Chapter 21 of this Part.

12.2.3 Continuity of steps of decks

Where the strength deck or effective decks (the decks below the strength deck which are considered as strength members in the longitudinal strength of the hull) change in level, special care to preserve the continuity of strength is to be taken. The change in height is to be accomplished by gradual sloping, or by extending each of the structural members which form the decks and tying them effectively together by diaphragms, girders, brackets, etc.

12.2.4 Compensation for openings

(a) Hatchways or other openings on strength or effective decks are to have well rounded corners, and compensation is to be suitably provided as necessary.

(b) Where attachments such as slant plates or protective means are provided on hatch corners of cargo hatchways, such attachments are not to be directly welded onto strength decks.

12.2.5 Rounded gunwales

Rounded gunwales, where adopted, are to have a sufficient radius for the thickness of the plates.

12.3 Effective Sectional Area of Strength Deck

12.3.1 Definition

The effective sectional area of the strength deck is the sectional area, on each side of the ship, of steel plating, longitudinal beams, girders, etc. extending for 0.5L amidships.

12.3.2 Effective sectional area of strength deck

(a) The effective sectional area for the midship part for which the modulus of athwartship section of the hull is specified in Chapter 15 is to be so determined as to comply with the requirements in Chapter 3 of this Part.

(b) Beyond the midship part, the effective sectional area of strength deck may be gradually reduced less than the value at the end of the midship part. However, the values at the position 0.15L from the after and fore end of L, respectively, are not to be less than 0.4 times the value at the middle point of L for ships with machinery amidships, or 0.5 times for ships with machinery aft.

(c) Where the section modulus of the athwartship section other than the midship part is greater than the value approved by the Society, the requirements specified in the provisory clause in 12.3.2(b) above may not be necessarily applied.

12.3.3 Strength deck beyond 0.15L from both ends

Beyond 0.15L from each end, the effective sectional area and the thickness of the strength deck plating may be gradually reduced avoiding abrupt changes.

12.3.4 Effective sectional area of strength deck within long poop

Notwithstanding the requirements in 12.3.2 above, the effective sectional area of the strength deck within long poop may be properly modified.

12.3.5 Deck within superstructure where superstructure deck is designed as strength deck

Where the superstructure deck is designed as the strength deck, the strength deck plating clear of the superstructure is to extend into the superstructure for about 0.05L without reducing the effective sectional area, and may be gradually reduced within.

12.4 Deck Plating

12.4.1 Thickness of deck plating

(a) The thickness of deck plating is not to be less than that obtained from the formula in 12.4.1(a)(i) or 12.4.1(a)(ii) as below. However, within enclosed spaces such as superstructures and deckhouses, the thickness may be reduced by 1 mm.

(i) The thickness of strength deck plating:

(1) Outside the line of openings for the midship part with longitudinal beams

$1.47S\sqrt{h} + 2.5$ mm

where:

S= Spacing (m) of longitudinal beams

h= Deck load (kN/m^2) specified in 12.1 of this Chapter

(2) Outside the line of openings for the midship part with transverse beams

$1.63S\sqrt{h} + 2.5$ mm

where:

S= Spacing (m) of transverse beams

h= Deck load (kN/m^2) specified in 12.1 of this Chapter

(3) Elsewhere

$1.25S\sqrt{h} + 2.5$ mm

where:

S= Spacing (m) of longitudinal beams

h= Deck load (kN/m^2) specified in 12.1 of this Chapter

(ii) The thickness of deck plating other than the strength deck is to be specified in the following:

$1.25S\sqrt{h} + 2.5$ mm

where:

S = Spacing (m) of longitudinal beams

h = Deck load (kN/m^2) specified in 12.1 of this Chapter

(b) Where decks inside the line of openings are longitudinally framed, adequate care is to be taken to prevent buckling of the deck plating.

12.4.2 Deck plating forming the tops of tanks

The thickness of deck plating forming the top of tanks is not to be less than that required in 17.2.2 of this Part for deep tank bulkhead plating, taking the beam spacing as the stiffener spacing.

12.4.3 Deck plating forming bulkhead recesses

The thickness of deck plating forming the top of shaft tunnels, thrust recesses or bulkhead recesses is not to be less than that required in 15.2.8(b) of this Part.

12.4.4 Deck plating under boilers or refrigerated cargoes

(a) The thickness of deck plating under boilers is to be increased by 3 mm above the specified thickness.

(b) The thickness of deck plating under refrigerating chamber is to be increased by one mm above the specified thickness. Where special means for the protection against the corrosion of the deck is provided, the thickness need not be increased.

12.4.5 Thickness of deck plating loaded with wheeled vehicles

The thickness of deck plating loaded with wheeled vehicles is to be determined by considering the concentrated loads from the wheeled vehicles.

12.4.6 Thickness of decks supporting unusual cargoes

The thickness of plates of decks carrying cargo loads which can not be treated as evenly distributed loads is to be determined by taking into account the load distribution of each particular cargo.

Chapter 13
Superstructures and Deckhouses

13.1 General

13.1.1 Application

(a) Ships are to be provided with forecastles. However, it may be omitted where the bow freeboard is deemed sufficient by the Society.

(b) The construction and scantlings of superstructures and deckhouses are to be in accordance with the relevant chapters in addition to this Chapter.

(c) The requirements in this Chapter are prescribed for the superstructures and deckhouses up to the third tier above the freeboard deck. As for the superstructures and deckhouses above the third tier, the construction and scantlings thereof are to be as deemed appropriate by the Society.

(d) As for the superstructures and deckhouses in ships with an especially large freeboard, the construction of bulkhead may be suitably modified subject to the approval by the Society.

13.2 Construction and Scantlings

13.2.1 Head of water h

(a) The head of water for the calculation of the scantlings of superstructure end bulkheads and boundary walls of deckhouses is not to be less than that obtained from the following formula:

ac(0.067bL - y) m

where:

a = As given by the following formulae:

Exposed front bulkhead and wall of the first tier:

$$2.0 + \frac{L}{120}$$

Exposed front bulkhead and wall of the second tier:

$$1.0 + \frac{L}{120}$$

Exposed front bulkhead and wall of the third tier, and side walls and protected end bulkheads and front walls:

$$0.5 + \frac{L}{120}$$

Aft bulkheads and walls located abaft the midship:

$$0.7 + \frac{L}{1000} - \frac{0.8x}{L}$$

Aft bulkheads and walls located afore the midship:

$$0.5 + \frac{L}{1000} - \frac{0.4x}{L}$$

b = As given by the following formulae:

where

x/L is less than 0.45:

$$1.0 + \left(0.5 - 1.1\frac{x}{L}\right)^2$$

where

x/L is 0.45 and over:

$$1.0 + 1.5\left(1.1\frac{x}{L} - 0.5\right)^2$$

x = Distance (m) from the bulkhead or end wall to the after perpendicular, or distance from the mid-point of the side wall to the after perpendicular.

However, where the length of the side wall exceeds 0.15 L, the side wall is to be equally subdivided into span not exceeding 0.15L and the distance from the mid-point of the subdivisions to the after perpendicular is to be taken.

c = Coefficient as given by the following formulae:

For end bulkheads of superstructures: 1.0

For boundary walls of deckhouses: $0.3 + 0.7\frac{b'}{B'}$

However, where $\frac{b'}{B'}$ is less than 0.25, $\frac{b'}{B'}$ is to be taken as 0.25.

b' = Breadth (m) of deckhouse at the position under consideration.

B'= Breadth (m) of ship on the exposed deck at the position under consideration.

y = Vertical distance (m) from the designed maximum load line to the mid-point of the span of stiffeners when determining the scantlings of stiffeners; and to the mid-point of plating when determining the thickness of bulkhead or boundary wall plating.

(b) The head of water for the calculation of the scantlings of superstructure end bulkheads and boundary walls of deckhouses is not to be less than that obtained from the formulae in Table XV 13-1 irrespective of the provision in 13.2.1(a) of this Chapter.

Table XV 13-1
The Head of Water

	Exposed front bulkhead and wall of the first tier	Others
L is 50 metres and under	3.0 (m)	1.5 (m)
L exceeds 50 metres	$2.5 + \frac{L}{100}$ (m)	$1.25 + \frac{L}{200}$ (m)

13.2.2 Thickness of bulkhead and wall plating

(a) The thickness of superstructure end bulkhead plating and boundary wall plating is not to be less than that obtained from the following formula:

$3S\sqrt{h}$ mm

where:

h = Head of water (m) specified in 13.2.1 of this Chapter

S = Spacing of stiffeners (m)

(b) The thickness of bulkhead and wall plating is not to be less than that obtained from the following formulae or 5 mm, whichever is greater, irrespective of the provisions in 13.2.2(a) above:

Bulkhead plating of the first tier:

$$5.0 + \frac{L}{100} \quad \text{mm}$$

Plating of other bulkheads:

$$4.0 + \frac{L}{100} \quad \text{mm}$$

13.2.3 Stiffeners

(a) The section modulus of stiffeners on superstructure end bulkheads and deckhouse boundary walls is not to be less than that obtained from the following formula:

$$3.5Sh\ell^2 \quad \text{cm}^3$$

where:

S and h = As specified in 13.2.2 above

ℓ = Tween deck height (m)

However, where ℓ is less than 2 metres, ℓ is to be taken as 2 metres.

(b) Both ends of stiffeners on the exposed bulkheads of superstructures and boundary walls of deckhouses are to be connected to the deck by welding except where otherwise approved by the Society.

13.3 Closing Means for Access Openings in Superstructure End Bulkheads and Deckhouses Protecting Companion

13.3.1 Closing means for access openings

(a) The doors to be provided on the access openings in the end bulkheads of enclosed superstructures and deckhouses protecting companion ways giving access to the spaces under the freeboard deck or the spaces in the enclosed superstructures are to be in accordance with the requirements in (i) through (v):

(i) The doors are to be made of steel or other equivalent materials and to be permanently and rigidly fitted to the bulkheads.

(ii) The doors are to be rigidly constructed, to be of equivalent strength to that of intact bulkhead and to be weathertight when closed.

(iii) The means for securing weathertightness are to consist of gaskets and clamping devices or other equivalent devices and to be permanently fitted to the bulkhead or the door itself.

(iv) The doors are to be operated from both sides of the bulkheads.

(v) Hinged doors are, as a rule, to open outward.

(b) Arrangements of sills

(i) The height of sills of access openings specified in 13.3.1(a) is not to be less than 380 mm above the upper surface of the deck. For sills protecting access openings to spaces below the freeboard deck, the height is to comply with the provisions of 18.4.2 of this Part. However, higher sills may be required when deemed necessary by the Society.

(ii) In principle, portable sills are not permitted.

(c) Openings in the top of a deckhouse on a raised quarterdeck or superstructure of less than standard height, having a height equal to or greater than the standard quarterdeck height, are to be provided with an acceptable means of closing but need not be protected by an efficient deckhouse or companionway, provided that the height of the deckhouse is at least the standard height of a superstructure. Openings in the top of the deckhouse which is less than a standard superstructure height may be treated in a similar manner.

13.4 Aluminum Superstructures and Deckhouses

13.4.1 Scantlings

Where deckhouses are constructed of aluminum alloys, the required plate thickness and stiffener section modulus, SM, are first to be determined as required for mild steel superstructures and deckhouses, and are then to be increased by the material factor, $(235/Y_{aw})^{0.50}$ or $235/Y_{aw}$, as indicated below.

For all deck and bulkhead plating and stiffeners, the required thickness and section modulus for aluminum alloy plate and shapes are obtained from the following equations:

Plating:

$$t_{al} = t_s \left(\frac{Y_S}{Y_{aw}}\right)^{0.5} \qquad \text{mm}$$

Stiffeners:

$$SM_{al} = \frac{Y_S}{Y_{aw}} SM_S \qquad \text{cm}^3$$

Where:

t_{al}	=	minimum thickness of aluminum plate.
t_s	=	required plate thickness for steel obtained from 12.4
SM_{al}	=	minimum section modulus of aluminum stiffeners.
SM_S	=	minimum section modulus of steel stiffeners, as determined from Chapter 10 and Chapter 11 for deck stiffeners and 13.2.3 for bulkhead stiffeners
Y_S	=	235 N/mm^2
Y_{aw}	=	minimum yield strength of the welded aluminum alloy under consideration at 0.20% offset in N/mm^2

In addition, the aluminum stiffeners are to have a depth not less than that given below:

$$d_{al} = 3SM_S \frac{d_S}{SM_{al}}$$

where

d_{al}	=	minimum required depth for aluminum stiffeners.
d_S	=	minimum required depth for steel stiffeners; not to be less than 100 mm depth for fronts and 80 mm for sides and ends.

Chapter 14

Bulwarks, Freeing Ports, Side Scuttles, Shell Doors and Gangways

14.1 Bulwarks and Guardrails

14.1.1 General

Guardrails or bulwarks are to be fitted around all exposed decks. The height of the bulwarks or guardrails is to be at least 1 m from the deck, provided that where this height would interfere with the normal operation of the ship, a lesser height may be approved, if complying with the requirements of the Administration and the Society is satisfied that adequate protection is provided.

14.1.2 Bulwark constructions

(a) Bulwarks are to be of ample strength in proportion to the height and stiffened at the upper edge and supported by the stay from the deck in way of beams or at effectively stiffened positions.

(b) Thickness of plate bulwarks

(i) The thickness of plate bulwarks of ordinary height on the freeboard deck is generally not to be less than 6 mm.

(ii) Bulwarks in way of the mooring pipe, cargo gear fittings, deck cargo lashing fittings, etc., the plating is to be suitably increased or doubled and adequate stiffened.

(c) Bulwark stays

(i) Stays on bulwarks are not to be spaced more than 1.8 m apart.

(ii) Stays on bulwarks which are designed to subject timber deck cargoes is not to be spaced more than 1.5 m apart.

(iii) A bracket type is recommended for the lower connections of bulwark stays (See Fig. XV 14-1 as below). In cases where a gusset type is applied for the lower connections of bulwark stays (See Fig. XV 14-1 as below), special consideration is to be given.

(iv) In cases where a bracket type is applied for the lower connections of bulwark stays, the bulwark stays are to beproperly stiffened for the prevention of local buckling.

(d) Miscellaneous

(i) Gangways and other openings in bulwarks are to be well clear of the breaks of superstructures.

(ii) Where bulwarks are cut to form gangways or other openings, stays of increased strength are to be provided at the ends of the openings.

(iii) At ends of superstructures, the bulwark rails are to be bracketed either to the superstructure end bulkheads or to the stringer plates of the superstructure decks, or the equivalent arrangements are to be made so that an abrupt change of strength may be avoided.

(iv) Expansion joints are to be provided at appropriate intervals in bulwarks.

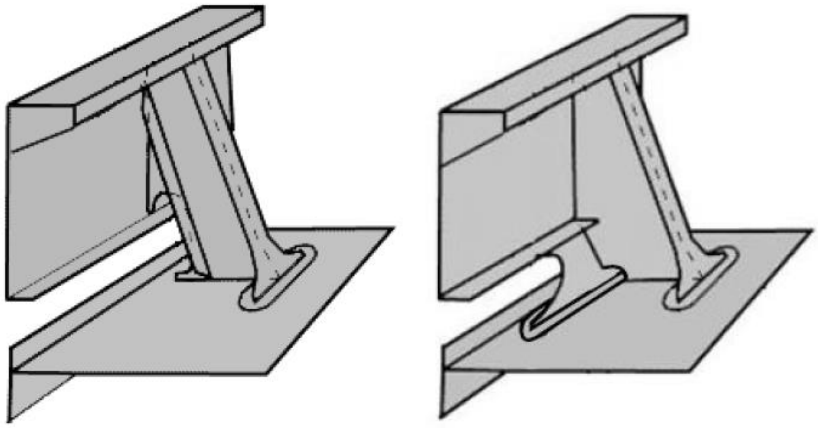

Fig. XV 14-1
Example of Bracket Type (left) and Gusset Type (right)

14.1.3 Guardrails

Guardrails fitted on superstructure and freeboard decks are to have at least three courses. The clearance below the lowest course of the guardrails is not to exceed 230 mm. The other courses are to be not more than 380 mm apart. In the case of ships with rounded gunwales the guardrail supports are to be placed on the flat of the deck. In other locations, guardrails with at least two courses are to be fitted. Guardrails are to comply with the following provisions:

(a) Fixed, removable or hinged stanchions are to be fitted about 1.5 m apart. Removable or hinged stanchions are to be capable of being locked in the upright position;

(b) At least every third stanchion is to be supported by a bracket or stay. Alternatively, measures deemed appropriate by the Society are to be taken;

(c) Where necessary for the normal operation of the ship, steel wire ropes may be accepted in lieu of guardrails. Wires are to be made taut by means of turnbuckles; and

(d) Where necessary for the normal operation of the ship, chains fitted between two fixed stanchions and/or bulwarks are acceptable in lieu of guardrails.

14.2 Freeing Ports

14.2.1 General

(a) Where bulwarks on the weather portions of freeboard or superstructure decks form wells, ample provision is to be made for rapidly freeing the decks of water and for draining them.

(b) Ample freeing ports are to be provided for clearing any space other than wells, where water is liable to be shipped and to remain.

(c) In ships having superstructures which are open at either or both ends, adaquate provision for freeing the space within superstructures is to be provided.

(d) In ships having a reduced freeboard, guardrails are to be provided for at least a half of the length of the exposed portions of weather deck or other effective freeing ports are to be considered, as required by the Society.

14.2.2 Freeing port area

(a) The freeing port area on each side of the ship for each well on the freeboard and raised quarter decks is not to be less than that obtained from the formulae. The area for each well on superstructure decks other than raised quarter deck is not to be less than one-half of that obtained from the formulae.

Where the length of bulwark (l) in the well is 20 m or less:

A= 0.7 + 0.035 l m^2

where l exceeds 20 m:

A= 0.07 l m^2

l need in no case be taken as greater than 0.7 L_f.

If the bulwark is more than 1.2 m in average height, the required area is to be increased by 0.004 m^2 per metre of length of well for each 0.1 m difference in height. If the bulwark is less than 0.9 m in average height, the required area may be decreased by 0.004 m^2 per m of length of well for each 0.1 m difference in height.

(b) In ships with no or less sheer than the standard, the minimum freeing port area obtained from the formulae in 14.2.2(a) is to be increased by multiplying with the factor obtained from the following formula:

$$1.5 - \frac{S}{2S_0}$$

where:

S = Average of actual sheer, in mm.

S_0 = Average of standard sheer according to the following requirements, in mm.

The ordinates of the standard sheer profile are given in the Table XV 14-1 as below. The standard mean height of sheer is the sums of the respective products, which are obtained from each four ordinate of the profile in forward and after half multiplied by the corresponding coefficients given in Table XV 14-1 as below, divided by eight.

Table XV 14-1
Standard Sheer Profile

	Station	Ordinates (mm)	coefficient
After half	After Perpendicular	$25(L_f/3+10)$	1
	$L_f/6$ from A.P.	$11.1(L_f/3+10)$	3
	$L_f/3$ from A.P.	$2.8(L_f/3+10)$	3
	Amidships	0	1
Forward half	Amidships	0	1
	$L_f/3$ from F.P.	$5.6(L_f/3+10)$	3
	$L_f/6$ from F.P.	$22.2(L_f/3+10)$	3
	Forward Perpendicular	$50(L_f/3+10)$	1

(c) Where a ship is provided with a trunk or a hatch side coaming which is continuous or substantially continuous between detached superstructures, the area of the freeing port opening is not to be less than that given by the following table:

Breadth of hatchway or trunk in relation to the breadth of ship	Area of freeing ports in relation to the total area of the bulwarks
40% or less	20%
75% or more	10%

The area of freeing ports at intermediate breadths is to be obtained by linear interpolation.

(d) Notwithstanding the requirements in 14.2.2(a) to 14.2.2(c) above, where deemed necessary by the Society in ships having trunks on the freeboard deck, guardrails are to be provided instead of bulwarks on the freeboard deck in way of trunks for more than half of the length of the trunk.

14.2.3 Arrangement of freeing ports

(a) Two-thirds of the freeing port area required by 14.2.2 above is to be provided in the half of the well near the lowest point of the sheer curve, and the remaining one-third is to be evenly spread along the remaining length of the well.

(b) The freeing ports are to have well rounded corners and their lower edges are to be as near the deck as practicable.

14.2.4 Construction of freeing ports

(a) Where both the length and the height of freeing ports exceed 230 mm respectively, freeing ports are to be protected by rails spaced approximately 230 mm apart.

(b) Where shutters are provided on freeing ports, ample clearance is to be provided to prevent jamming. Hinge pins or bearings of the shutters are to be of non-corrodible materials.

(c) The shuttes referred to in 14.2.4(b) above are not to be provided with securing appliances.

14.3 Side Scuttles and Windows

14.3.1 General application

(a) The requirements in this section apply to side scuttles and windows on the side shell, superstructures and deckhouses up to the third tier above the freeboard deck. The requirements for the deckhouses, superstructures and side shell above the third tier are to be as deemed appropriate by the Society.

(b) Notwithstanding 14.3.1(a) above, windows on the deckhouse up to the third tier above the freeboard deck may be as deemed appopriate by the Society for windows that do not interfere with the watertightness of the ship and are deemed as necessary for the ship's operation such as those on the navigation bridge.

(c) Definition

For the purpose of this section, the following definitions apply:

(i) "Breath of the ship" is the greatest moulded breadth in metres of the ship at or below the deepest subdivision draught or 500 mm, whichever is greater.

(ii) "Deepest subdivision druaght" is the draught which corresponds to the summer draught assigned to the ship.

14.3.2 General requirement for position of side scuttles

(a) No side scuttle is to be provided where its sill is below a line drawn parallel to the freeboard deck at side and having its lowest point 2.5% of the breath of the ship above the deepest subdivision draught. Side scuttles that have their sill below the freeboard deck and which are of a hinged type are to be provided with locking arrangements.

(b) No side scuttle is to be provided at any space solely engaged in the carriage of cargoes.

(c) The deadlights of side scuttles deemed appropriate by Society may be portable, provided that such scuttles comply with the following requirements (i) to (iv):

(i) Fitting Type A side scuttles or Type B side scuttles is not required.

(ii) Such side scuttles are fitted abaft one eighth of the subdivision length from the forward perpendicular. The subdivision length is the greatest projected moulded length in metres of the ship at or below deck or decks limiting the vertical extent of flooding with the ship at the deepest subdivision draught.

(iii) Such side scuttles are fitted above a line drawn parallel to the bulkhead deck at side and having its lowest point at a height of 3.7 m plus 2.5% of the breath of the ship above the deepest subdivision draught.

(iv) Such portable deadlights are to be stowed adjacent to the side scuttles they serve.

(d) Automatic ventilating side scuttles are not to be fitted in the shell plating below the freeboard deck.

14.3.3 Applcation of Side Scuttles

(a) Side scuttles inboard are to be Type A side scuttles, Type B side scuttles, or Type C side scuttles comlying with the requirements in 17.2 of Part XI or equivalent thereto.

(b) Type A side scuttles, Type B side scuttles and Type C side scuttles are to be so arranged that their design pressure is less than the maximum allowable pressure determined by their nominal diameters and grades. (See 14.3.5 of this Chapter)

(c) Side scuttles to spaces below the freeboard deck and those provided to sunken poops are to be Type A side scuttles, Type B side scuttles or equivalent thereto.

(d) The side scuttles as mentioned in (i) or (ii) as below, are to be type A, type B or equivalent thereof:
   (i) Side scuttles exposed to direct impact from waves;
   (ii) Side scuttles to the following spaces:
      (1) within the first tier of side shell or superstructures;
      (2) within the first tier deckhouses on the freeboard deck which have unprotected deck openings leading to spaces below the freeboard deck inside; or
      (3) within the deckhouses considered buoyant in stability calculations.

(e) Where an opening in the superstructure deck or in the top of the deckhouse on the freeboard deck which gives access to a space below the freeboard deck or to a space within an enclosed superstructure is protected by the deckhouse or companion, the side scuttles fitted to those spaces which give direct access to an open stairway are to be Type A side scuttles, Type B side scuttles or equivalent thereto. Where cabin bulkhead or door separate side scuttles from a direct access leading below the freeboard deck, application of side scuttles is to be as deemed appropriate by the Society.

(f) Side scuttles to the spaces in the second tier on the freeboard deck considered buoyant in stability calculations are to be Type A side scuttles, Type B side scuttles or equivalent thereto.

(g) In ships with an unusually reduced freeboard, side scuttles located below the waterline after flooding into compartments are to be of a fixed type.

14.3.4 Protection of side scuttles

All side scuttles in way of the anchor housing and other similar places where they are liable to be damaged are to be protected by strong gratings.

14.3.5 Design pressure and maximum allowable pressure of side scuttles

(a) The design pressure of side scuttles is to be less than maximum allowable pressure (See Table XV 14-2 as below) determined by their nominal diameters and grades. The design pressure P is to be determined using the following equation:

$$P = 10ac\,(0.067bL-y) \quad \text{kPa}$$

where:

a, c and b = As specified in 13.2.1(a) of this Part.

y = Vertical distance, in m, from side scuttle sill to summer load line (or timber load line if given).

(b) Notwithstanding the provision of 14.3.5(a) above, the design pressure is not to be less than the minimum design pressure given in Table XV 14-3 as below.

14.3.6 General requirement for position of windows

No rectangular window is to be provided to spaces below the freeboard deck, the first tier of superstructures, and the first tier of deckhouses considered buoyant in stability calculations or which protect deck openings leading to spaces below the freeboard deck inside.

Table XV 14-2
Maximum Allowable Pressure of Side Scuttles

Type	Nominal diameter (mm)	Glass thickness (mm)	Maximum allowable pressure (kPa)
A	200	10	328
	250	12	302
	300	15	328
	350	15	241
	400	19	297
B	200	8	210
	250	8	134
	300	10	146
	350	12	154
	400	12	118
	450	15	146
C	200	6	118
	250	6	75
	300	8	93
	350	8	68
	400	10	82
	450	10	65

Table XV 14-3
Minimum Design Pressure

	L ≤ 50 m	50 m < L < 90 m
Exposed front bulkhead of the first tier superstructure	30 (kPa)	25+L/10 (kPa)
Other places	15 (kPa)	12.5+L/20 (kPa)

14.3.7 Application to windows

(a) Windows inboard are to be Type E windows and Type F windows complying with the requirements in 18.2 of Part XI or equivalent thereto.

(b) Type E windows and Type F windows are to be so arranged that the design pressure is less than the maximum allowable pressure determined by their nominal size and grade. (See 14.3.8 as below)

(c) Windows to spaces in the second tier of the freeboard deck which gives direct access to a spaces within the first tier of enclosed superstructures or below the freeboard deck are to be provided with hinged deadlights or externally fixed shutters. Where cabin bulkheads or doors separate the space within the second tier of enclosed superstructures, application of windows to the spaces within the second tier is to be as deemed appropriate by the Society.

(d) Windows to spaces in the second tier of the freeboard deck considered buoyant in stability calculations are to be provided with hinged deadlights or externally fixed shutters.

14.3.8 Design pressure and maximum allowable pressure of rectanagular windows

(a) The design pressure of windows is to be less than the maximum allowable pressure (See Table XV 14-4 as below) determined by their grades and nominal diameters. The design pressure P is to be determined using the following equation:

$P = 10ac\,(0.067bL-y)$ kPa

where:

a, c and b = As specified in 13.2.1(a) of this Part.

y = Vertical distance, in m, from the sill of rectangular window to summer load line (or timber load line if given).

(b) Notwithstanding the provision of (a) above, the design pressure is not to be less than the minimum design pressure given in Table XV 14-2.

Table XV 14-4
Maximum Allowable Pressure of Windows

Type	Nominal size Width (mm) × height (mm)	Glass thickness (mm)	Maximum allowable pressure (kPa)
E	300 × 425	10	99
	355 × 500	10	71
	400 × 560	12	80
	450 × 630	12	63
	500 × 710	15	80
	560 × 800	15	64
	900 × 630	19	81
	1000 × 710	19	64
F	300 × 425	8	63
	355 × 500	8	45
	400 × 560	8	36
	450 × 630	8	28
	500 × 710	10	36
	560 × 800	10	28
	900 × 630	12	32
	1000 × 710	12	25
	1100 × 800	15	31

14.4 Bow Doors and Inner Doors

14.4.1 Application

(a) This section gives requirements for the arrangement, strength and securing of bow doors and inner doors leading to a complete or long forward enclosed superstructure.

(b) Two types of visor and side opening doors (hereinafter collectively referred to as "door(s)") are provided for.

(c) Other types of doors in 14.4.1(b) above are to be specially considered in association with applicable requirements of the rules.

14.4.2 Arrangement of doors

(a) Doors are to be situated above the freeboard deck. A watertight recess in the collision bulkhead and above the deepest waterline fitted with for arrangement of ramps or other related mechanical may be regarded as a part of the freeboard deck for the purpose of this requirement.

(b) A inner door is to be fitted. The inner door is to be part of the collision bulkhead. The inner door needs not be fitted directly above the bulkhead below, provided it is located within the limits specified for the position of the collision bulkhead. Refer to the regulations of 15.1.1 of this Part.

(c) A vehicle ramp may be arranged as the inner door specified in 14.4.2(b) above, provided that it forms a part of the collision bulkhead and satisfies the requirements for position of the collision bulkhead as stipulated in 15.1.1 of this Part. If this is not possible a separate inner weathertight door is to be installed, as far as is practicable within the limits specified for the position of the collision bulkhead.

(d) Doors are to be generally weathertight and give effective protection to inner doors.

(e) Inner doors forming part of the collision bulkhead are to be weathertight over the full height of the cargo space and arranged with sealing supports on the aft side of the doors.

(f) Doors and inner doors are to be arranged so as to preclude the possibility of the door causing structural damage to the inner door or to the bulkhead when damage to or detachment of the door occurs. If that is not possible, a separate inner weathertight door is to be installed, as indicated in 15.1.1 of this Part.

(g) The requirements for inner doors are based on the assumption that vehicle are effectively lashed and secured against movement in the stowed position.

14.4.3 Strength criteria

(a) Scantlings of the primary members, securing and supporting devices of doors and inner doors are to be determined to withstand each design loads using the following permissible stresses:

shear stress: $\tau = \frac{80}{K}$ N/mm^2

Bending stress: $\sigma = \frac{120}{K}$ N/mm^2

Equivalent stress: $\sigma_e = \sqrt{\sigma^2 + 3\tau^2} = \frac{150}{K}$ N/mm^2

where:

K = Material factor as specified in 1.4.1(b)(i) of this Part.

(b) The buckling strength of primary members is to be verified as being adequate.

(c) For steel to steel bearings in securing and supporting devices, the bearing pressure calculated by dividing the design force by the projected bearing area is not to exceed $0.8\sigma_F$, where σ_F is the yield stress of the bearing material. For other bearing materials, the permissible bearing pressure is to be deemed at the discretion of the Society.

(d) The arrangement of securing and supporting devices is to be such that threaded bolts do not carry support forces. The maximum tension in way of bolts of bolts not carrying support forces is not to exceed:

$$\frac{125}{K} \qquad N/mm^2$$

where:

K = Material factor as specified in 1.4.1(b)(i) of this Part.

14.4.4 Design loads

(a) Doors

(i) The design external pressure to be considered for the scantlings of primary members, securing and supporting devices of doors is not to be less than the pressure as follows:

$$P_e = 2.75C_H(0.22 + 0.15\tan\alpha) \cdot \left(0.4V\sin\beta + 0.6\sqrt{L}\right)^2 \qquad kN/m^2$$

where:

V = Speed of ship, in knots, as specified in 1.5.5 of this Part.

L = Length of ship as specified in 1.5.1 of this Part.

C_H = 0.0125L for L < 80 m,

= 1.0 for L ≥ 80 m.

α = Flare angle at the point to be considered.

β = Entry angle at the point to be considered.

(ii) The design external forces considered for the scantlings of securing and supporting devices of doors are not to be less than:

$$F_x = P_eA_x \qquad kN$$
$$F_y = P_eA_y \qquad kN$$
$$F_z = P_eA_z \qquad kN$$

where:

A_x = Area, in m², of the transverse vertical projection of the door between the levels of the bottom and the top of the upper deck bulwark, or between the bottom of the door and the top of the door, including the bulwark, where it is part of the door, whichever is the lesser. Where the flare angle of the bulwark is at least 15 degrees less than the flare angle of the adjacent shell plating, the height from the bottom of the door may be measured to the upper deck or to the top of the door, whichever is lesser. In determining the height from the bottom of the door to the upper deck or to the top of the door, the bulwark is to be excluded.

A_y = Area, in m², of the longitudinal vertical projection of the door between the levels of the bottom of the door and the top upper of the upper deck bulwark, or between the bottom of the door and the top of the door, including the bulwark, where it is part of the door, whichever is the lesser. Where the flare angle of the bulwark is at least 15 degrees less than the flare angle of the adjacent shell plating, the height from the bottom of the door may be measured to the upper deck or to the top of the door, whichever is lesser. In determining the height from the bottom of the door to the upper deck or to the top of the door, the bulwark is to be excluded.

A_z = Area, in m², of the horizontal projection of the door between the bottom of the door, including the bulwark, where it is part of the door, whichever is lesser. Where the flare angle of the bulwark is at least 15 degrees less than the flare angle of the adjacent shell plating, the height from the bottom of the door may be measured to the upper deck or to the top of the door, whichever is lesser. In determining the height from the bottom of the door to the upper deck or to the top of the door, the bulwark is to be excluded.

P_e = External pressure, in kN/m², as given in 14.4.4(a)(i) of this Chapter with angles α and β defined as follows:

α = Flare angle measured at a location on the shell, h/2 above the bottom of the door and $l/2$ aft of the intersection of the door with the stem.

β = Entry angle measured at the same point as α above.

h = Height, in m, of the door between the levels of the door and the upper deck or between the bottom of the door and the top of the door, whichever is the lesser.

l = Length, in m, of the door at a height h/2 above the bottom of the door.

w = Breadth, in m, of the door at a height h/2 above the bottom of the door.

For doors including bulwark, of unusual form or proportions, e.g., ships with a rounded nose and large stem angles, the area and angles used for determination of the design values of external forces may require special consideration.

(iii) For visor doors the closing moment M_y under external load is to be taken as:

$$M_y = F_x a + 10Wc - F_z b \qquad kN - m$$

where:

W = Mass of the visor door, in t.

a = Vertical distance, in m, from visor pivot to the centroid of the transverse vertical projected area of the visor door, as shown in Fig. XV 14-2 as below.

b = Horizontal distance, in m, from visor pivot to the centroid of the projected area of the visor door, as shown in Fig. XV 14-2 as below.

c = Horizontal distance, in m, from visor pivot to the center of gravity of visor mass, as shown in Fig. XV 14-2 as below.

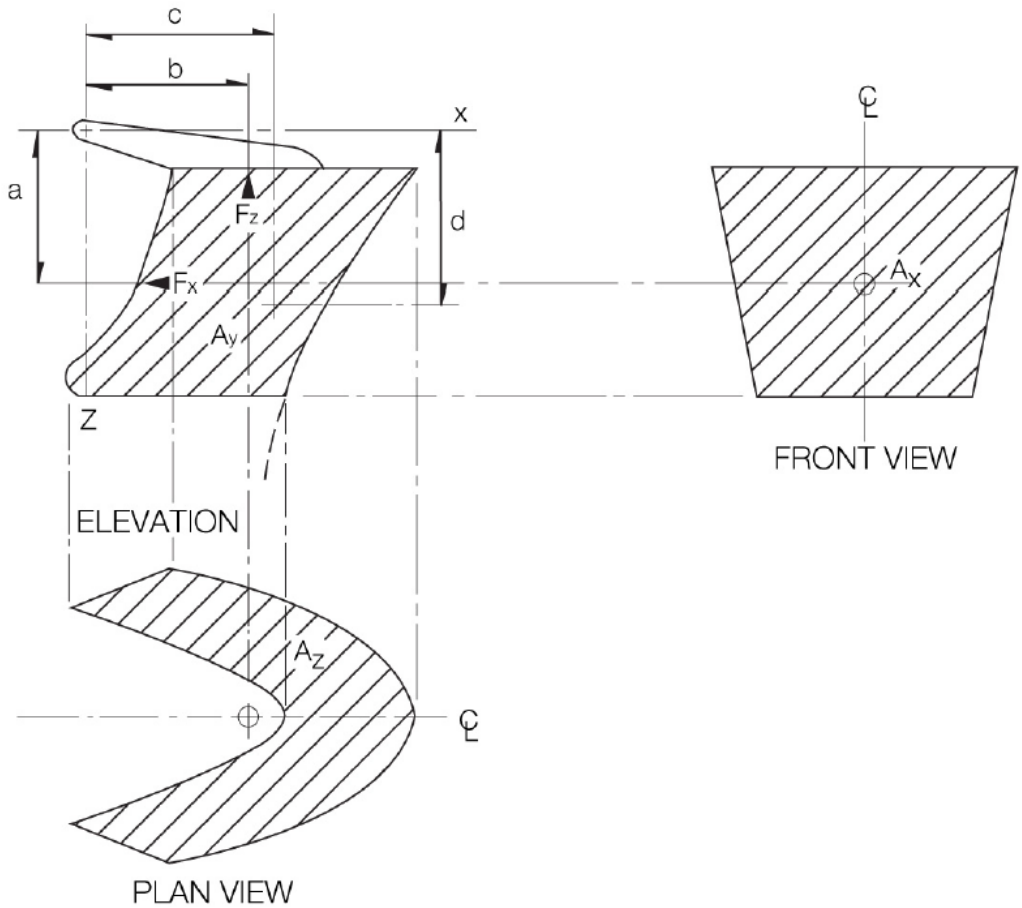

Fig. XV 14-2
Visor Type (Upper Hinged Type) Door

(iv) Moreover, the lifting arms of a visor door and its supports are to be dimensioned for the static and dynamic forces applied during the lifting and lowering operations, and a minimum wind pressure of 1.5 kN/m^2 is to be taken into account.

(b) Inner doors

(i) The design external pressure considered for the scantlings of primary members, securing and supporting devices and surrounding structure of inner doors is to be taken as the greater of the following:

P_e = 0.45L kN/m^2

P_h = 10h

where:

P_h = Hydrostatic pressure.

h = Distance, in m, from the load point to the top of the cargo space.

L = Length as specified in 14.4.4(a)(i) of this Chapter.

(ii) The design internal pressure P_b considered for the scantlings of securing devices of inner doors is not to be less than:

P_b = 25 kN/m^2

14.4.5 Scantlings of doors

(a) The strength of the door is to be commensurate with that of the surrounding structure.

(b) Adequate strength for opening and closing operations is to be provided in the connections of the lifting arms to the door structure and to the ship structure.

(c) Plating and secondary stiffeners

(i) The thickness of the door plating is not to be less than that required for the side shell plating or the superstructure side shell plating at the position calculated with the stiffener spacing taken as the frame spacing and it is not to be less than the minimum thickness of the shell plating.

(ii) Secondary door stiffeners are to be supported by primary members constituting the main stiffening members of the door

(iii) The section modulus of stiffeners of the door is not to be less than that required for frames at the position calculated with the stiffener spacing taken as the frame spacing. Consideration is to be given to differences in fixity between frames and stiffeners.

(iv) The stiffener webs are to have a net sectional area not less than.

$$A = \frac{QK}{10} \qquad cm^2$$

where:

Q = Shear force, in kN, in the stiffener calculated by using uniformly distributed external pressure P_e as given in 14.4.4(a)(i) of this Chapter.

K = Coefficient corresponding to the materials as given in 14.4.3(a) of this Chapter.

(d) Primary structure

(i) The primary members of the door and the hull structure in way are to have sufficient stiffness to ensure integrity of the boundary support of the door.

(ii) Scantlings of the primary members are generally to be supported by direct calculations in association with the external pressure given in 14.4.4(a)(i) of this Chapter and permissible stresses given in 14.4.3(a). Normally, formulae for simple beam theory may be applied to determine the bending stress. Members are to be considered to have simply supported end connections.

14.4.6 Scantlings of inner doors

(a) The strength of the inner door is to be equivalent to that of the surrounding hull structure.

(b) The thickness of the inner door is not to be less than that required for plating of the collision bulkhead.

(c) Section modulus of stiffeners of the inner door is not to be less than that required for stiffeners of the collision bulkhead.

(d) Scantlings of primary members are generally to be determined by direct calculations in association with the exteral pressure given in 14.4.4(b)(i) of this Chapter and permissible stresses in 14.4.3(a) of this Chapter. Normally, formulae for the simple beam theory may be applied.

(e) Stiffeners of the inner door are to be supported by girders.

(f) Where inner doors also serve as vehicle ramps, the scantlings are not to be less than those required for vehicle decks.

(g) The distribution of the forces acting on the securing and supporting devices is generally to be supported by direct calculations taking into account the flexibility of the structure and the actual position and stiffness of the supports.

14.4.7 Securing and supporting of doors

(a) Doors are to be fitted with adequate means of securing and supporting so as to be commensurate with the strength and stiffness of the surrounding structure. The hull supporting structure in way of the bow door is to be suitable for the same design loads and design stresses as the securing and supporting devices. Where packing is required, the packing material is to be of a comparatively soft type, and the supporting forces are to be carried by the steel structure only. Other types of packing may be considered. Maximum design clearance between securing and supporting devices is not generally to exceed 3 mm. A means is to be provided for mechanically fixing the door in the open position.

(b) Only the active supporting and securing devices having an effective stiffness in the relevant direction are to be included and considered to calculate the reaction forces acting on the devices. Small and/or flexible devices such as cleats intended to provide local compression of the packing material are not generally to be included in the calculations called for in 14.4.7(d)(v) of this Chapter. The number of securing and supporting devices are generally to be the minimum practical whilst taking into account the requirements for redundant provision given in 14.4.7(d)(vi) and 14.4.7(d)(vii) of this Chapter and the available space for adequate support in the hull structure. Securing devices and surrounding devices are to be provided at intervals not excessing 2.5 m and as close to each corner of the door as is practicable.

(c) For opening outwards visor doors, the pivot arrangements is generally to be such that the visor is self closing under external loads, that is $M_y > 0$. Moreover, the closing moment M_y as given in 14.4.4(a)(iii) of this Chapter is to be not less than:

$$M_{yo} = 10Wc + 0.1(a^2 + b^2)^{0.5} \cdot (F_x^2 + F_z^2)^{0.5} \qquad \text{kN-m}$$

where:

W, a, b, c, F_x and F_z = As specified in 14.4.4(a) of this Chapter.

(d) Scantlings

(i) Securing and supporting devices are to be adequately designed so that they can withstand the reaction forces within the permissible stresses given in 14.4.3(a) of this Chapter.

(ii) For visor doors the reaction forces applied on the effective securing and supporting devices assuming the door as a rigid body are determined for the following combination of external loads acting simultaneously together with the self weight of the door.

Case 1: F_x and F_z.
Case 2: $0.7F_y$ acting on each side separately together with $0.7F_x$ and $0.7F_z$.

where F_x, F_y and F_z are determined as indicated in 14.4.4(a)(ii) of this Chapter and applied at the centroid of projected areas.

(iii) For side-opening doors the reaction forces applied on the effective securing and supporting devices assuming the door as a rigid body are determined for the following combination of external loads acting simultaneously together with the self weight of the door.

Case 1: F_x, F_y and F_z acting on both doors.
Case 2: $0.7\ F_x$ and $0.7\ F_z$ acting on both doors and $0.7F_y$ acting on each door separately.

where F_x, F_y and F_z are determined as indicated in 14.4.4(a)(ii) of this Chapter and applied at the centroid of project areas.

(iv) The support forces as determined according to 14.4.7(d)(ii) case 1 and 14.4.7(d)(iii) case 1 of this Chapter are to generally give rise to a zero moment about the transverse axis through the centroid of the area A_x. For visor doors, longitudinal reaction forces of pin and/or wedge supports at the door base contributing to this moment are not to be of the forward direction.

(v) The distribution of the reaction forces acting on the securing and supporting devices may require to be supported by direct calculations taking into account the flexibility of the hull structure and the actual position and stiffness of the supports.

(vi) The arrangement of securing and supporting devices in way of these securing devices is to be designed with redundancy so that in the event of failure of any single securing or supporting device the

remaining devices are capable of withstanding the reaction forces without exceeding by more than 20% the permissible stresses as given in 14.4.3 of this Chapter.

(vii) For visor doors, two securing devices are to be provided at the lower part of the door, each capable of providing the full reactions force required to prevent opening of the door within the permissible stresses given in 14.4.3(a). The opening moment M_o to be balanced by this reaction force, is not to be taken less than:

$M_o = 10Wd + 5A_x a$ kN-m

where:

d = Vertical distance, in m, from the hinge axis to the center of gravity of the door as shown in Fig. XV 14-2 of this Chapter.

A_x, W, a = As defined in 14.4.4(a)(ii) of this Chapter.

(viii) For visor doors, the securing and supporting devices excluding the hinges are to be capable of resisting the vertical design force ($F_z - 10W$), in kN, within the permissible stresses given in 14.4.3(a) of this Chapter.

(ix) All load transmitting elements in the design load path, from door through securing and supporting devices into the ship structure, including welded connections, are to be to the same strength standard as required for the securing and supporting devices.

(x) For side-opening doors, thrust bearing has to be provided in way of girder ends at the closing of the two leaves to prevent one leaf from shifting towards the other one under effect of unsymmetrical pressure (see example of Fig. XV 14-3 as below). Each part of the thrust bearing has to be kept secured on the other part by means of securing devices. Any other arrangement serving the same purpose may be proposed.

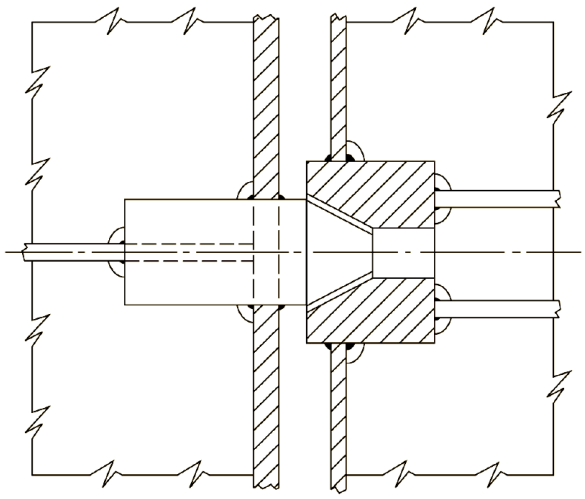

Fig. XV 14-3
Thrust Bearing

14.4.8 Securing and locking arrangement

(a) Systems for operation

(i) Securing devices are to be simple to operate and easily accessible. Securing devices are to be equipped with mechanical locking arrangement (self locking or separate arrangement), or to be of the gravity type. The opening and closing systems as well as securing and locking devices are to be interlocked in such a way that they can only operate in the proper sequence.

(ii) Doors and inner doors giving access to vehicle decks are to be provided with an arrangement for remote control, from a position above the freeboard deck, of:

(1) the closing and opening of the doors, and

(2) associated securing and locking devices for every door.

(iii) Indication of the open/closed position of every door and every securing and locking device is to be provided at the remote control stations. The operating panels for operation of doors are to be inaccessible to unauthorized persons. A notice plate, giving instructions to the effect that all securing devices are closed and locked before leaving harbor, is to be placed at each operating panel and is to be supplemented by warning indicator lights.

(iv) Where hydraulic securing devices are applied, the system is to be mechanically lockable in closed position. This means that, in the event of loss of the hydraulic fluid, the securing devices remain locked. The hydraulic system for securing and locking devices is to be isolated from other hydraulic circuits, when in closed position.

(b) Systems for indication/monitoring

(i) Separate indicator lights and audible alarms are to be provided on the navigation bridge and on the operating panel to show that the door and inner door are closed and that their securing and locking devices are properly positioned. The indication panel is to be provided with a lamp test function. It is to not be possible to turn off the indicator light.

(ii) The indicator system is to be designed on the fail-safe principle and is to show by visual alarms if the door is not fully closed and not fully locked and by audible alarms if securing devices become open or locking devices become unsecured. The power supply for the indicator system is to be independent of the power supply for operating and closing the doors. The sensors of the indicator system are to be protected from water, ice formation and mechanical damages.

(iii) The indication panel on the navigation bridge is to be equipped with a mode selection function "harbor/sea voyage", so arranged that audible alarm is given if vessel leaves harbor with the door or inner door not closed and with any of the securing devices not in the correct position.

(iv) A water leakage detection system with audible alarm and television surveillance is to be arranged to provide an indication to the navigation bridge and to the engine control room of leakage through the inner door.

(v) Between the door and the inner door a television surveillance system is to be fitted with a monitor on the navigation bridge and in the engine control room. The system must monitor the position of doors and a sufficient number of their securing devices. Special consideration is to be given for lighting and contrasting color of objects under surveillance.

(vi) A drainage system is to be arranged in the area between the door and ramp, as well as in the area between the ramp and inner door where fitted. The system is to be equipped with an audible alarm function to the navigation bridge for water level in these areas exceeding 0.5 m above the car deck level.

14.4.9 Reinforcement around door openings

(a) Shell plating is to be properly rounded at the corners of door openings and is to be reinforced by thicker plate or by doubling plate around the openings.

(b) Where frames are cut at the door opening, web frames are to be fitted on both sides of the opening and the structure is to be such that it properly supports beams above the opening.

14.4.10 Operating and maintenance manual

(a) An operating and maintenance manual for the door and inner door is to be provided on board and contain necessary information on:

(i) Main particulars and design drawings, including:

(1) special safety precautions;

(2) details of vessel;

(3) equipment and design loading (for ramps);

(4) key plan of equipment (doors and ramps);

(5) manufacturer's recommended testing for equipment; and

(6) description of equipment for doors, inner bow doors, bow ramp/doors, side doors, stern doors, central power pack, bridge panel, engine control room panel.

(ii) Service conditions, including:
(1) limiting heel and trim of ship for loading/unloading;
(2) limiting heel and trim for door operations;
(3) doors/ramps operating instructions; and
(4) doors/ramps emergency operating instructions.

(iii) Maintenance, including:
(1) schedule and extent of maintenance;
(2) trouble shooting and acceptable clearances; and
(3) manufacturer's maintenance procedures.

(iv) Register of inspections, including inspection of locking, securing and supporting devices, repairs and renewals.

(b) Documented opening procedures for closing and securing the door and inner door are to be kept on board and posted at the appropriate place.

14.5 Side Shell Doors and Stern Doors

14.5.1 Application

This section gives requirements for the arrangement, strength and securing of side shell doors abaft the collision bulkhead, and stern doors (hereinafter collectively referred to as "door(s)") leading into enclosed spaces.

14.5.2 Arrangement of doors

(a) Doors are to be made weathertight.

(b) Where the lower edges of any openings of the doors are situated below the freeboard deck, the doors are to be watertight.

(c) Notwithstanding the requirements in 14.5.2(b) above, the lower edges of the doors are not to be below a line drawn parallel to the freeboard deck at side, which has its lowest point at least 230 mm above the deepest subdivision draught specified in 14.3.1(c)(ii) of this Chapter, unless the implementation of additional measures for ensuring watertightness such as the following (i) to (iv).
(i) A second door of equivalent strength and watertightness is to be fitted inside the watertight door
(ii) A leakage detection device is provided in the compartment between the two doors.
(iii) Drainage of this compartment to the bilges is controlled by a readily accessible screw-down valve
(iv) The number of door openings is to be kept to the minimum compatible with design and proper operation of the ship.

(d) The number of door openings is to be kept to the minimum compatible with design and proper operation of the ship.

(e) Doors are to preferably open outward.

(f) The strength criteria is to refer that specified in 14.4.3 of this Chapter.

14.5.3 Design loads

(a) The design forces considered for the scantlings of primary members, securing and supporting devices of side shell doors and stern doors are to be not less than:
(i) Design forces for securing or supporting devices of doors opening inwards:
(1) External force: $F_e = AP_e + F_p$ kN
(2) Internal force: $F_i = F_o + 10W$ kN

(ii) Design forces for securing or supporting devices of doors opening outwards:

(1) External force: $F_e = AP_e$ kN

(2) Internal force: $F_i = F_o + 10W + F_p$ kN

(iii) Design forces for primary members:

(1) External force: $F_e = AP_e$ kN

(2) Internal force: $F_i = F_o + 10W$ kN

whichever is the greater.

where:

A = Area, in m^2, of the door that bears the actual load in the loading direction.

W = Mass of the door, in t.

F_p = Total packing force in kN. Packing line pressure is normally not to be taken less than 5 N/mm.

F_o = The greater of F_c and 5A, in kN.

F_c = Accidental force, in kN, due to loose cargo etc., to be uniformly distributed over the area A and not to be taken as less than 300 kN. Where the area of doors is less than 30 m^2, the valve of F_c may be appropriately reduced to 10A, in kN. However, the valve of F_c may be taken as zero, provided an additional structure such as an inner ramp is fitted, which is capable of protecting the door from accidental forces due to loose cargoes.

P_e = External design pressure determined at the center of gravity of the door opening and not taken less than:

$10 (T - Z_G) + 25$ kN/m^2, for $Z_G < T$

25 kN/m^2, for $Z_G \geq T$

Moreover, for stern doors of ships fitted with bow doors, P_e is not to be taken less than:

$0.6C_H\left(0.8 + 0.6\sqrt{L}\right)^2$ kN/m^2

where:

L and C_H = As specified in 14.4.4(a)(i) of this Chapter.

T = Deepest subdivision draught defined in 14.3.1(c)(ii) of this Chapter, in m.

Z_G = Height of the center of area of the door, in m, above the baseline.

14.5.4 Scantlings of doors

(a) The strength of doors is to be commensurate with that of the surrounding structure.

(b) Doors are to be adequately stiffened and means are to be provided to prevent any lateral or vertical movement of the doors when closed.

(c) Adequate strength is to be provided in the connections of the lifting/maneuvering arms and hinges to the door structure and to the ship's structure.

(d) Where doors also serve as vehicle ramps, the design of the hinges is to take into account the ship angle of trim and heel which may result in uneven loading on the hinges.

(e) Plating and secondary stiffeners

(i) The thickness of the door plating is not to be less than the required thickness for the side shell plating or the superstructure side shell plating, using the door stiffener spacing, but the thickness of the stern door which is not exposed to direct wave impact by a permanent ramp way provided outside the stern door may be reduced by 20% from the required thickness prescribed above.

(ii) Notwithstanding the provision in 14.5.4(e)(i) above, the thickness of the door plating is not to be less than the minimum required thickness of shell plating.

(iii) Where doors serve as vehicle ramps, the plating thickness is to be not less than required for vehicle decks.

(iv) The secondary stiffeners are to be supported by primary members constituting the main stiffening of the door.

(v) The section modulus of horizontal or vertical stiffeners is not to be less than that required for frames in the position calculated with the stiffener spacing taken as the fram spacing. Consideration is to be given, where necessary, to differences in fixity between ship's frames and door stiffeners.

(vi) Where doors serve as vehicle ramps, the stiffener scantlings are not to be less than that required for vehicle decks.

(f) Primary structure

(i) Scantlings of the primary members are generally to be supported by direct calculations in association with the design loads given in 14.5.3 of this Chapter and permissible stresses given in 14.5.2(f) of this Chapter. Normally, formulae for simple beam theory may be applied to determine the bending stresses. Members are to be considered to have simply supported end connections.

(ii) Webs of primary members are to be properly stiffened in the vertical direction to shell plating.

(iii) The primary members and the hull structure in way are to have sufficient stiffness to ensure structural integrity of the boundary of the doors.

(iv) Ends of stiffeners and primary members of the doors are to have sufficient rigidity against rotation and the moment of inertia is not to be less than that obtained from the following formula:

$8 d^4 F_p$ cm^4

where:

d = Distance between securing devices, in m.

F_p = See 14.5.3 of this Chapter

(v) Moment of inertia of boundary members of the door which support primary members between securing devices is to be increased in proportion to force.

14.5.5 Securing and supporting of doors

(a) Doors are to be fitted with adequate means of securing and supporting so as to be commensurate with the strength and stiffness of the surrounding structure. The hull supporting structure in way of the doors is to be suitable for the same design loads and design stresses as the securing and supporting devices. Where packing is required, the packing material is to be of a comparatively soft type, and the supporting forces are to be carried by the steel structure only. Other types of packing may be considered appropriate by the Society. Maximum design clearance between securing and supporting devices is not generally to exceed 3 mm. A means is to be provided for mechanically fixing the door in the open position.

(b) Only active supporting and securing devices having an effective stiffness in the relevant direction are to be included and considered to calculate the reaction forces acting on the devices. Small and/or flexible devices such as cleats intended to provide local compression of the packing material are not generally to be included in the calculations called for in 14.5.5(c)(ii) as below. The number of securing and supporting devices are generally to be the minimum practical whilst taking into account the requirement for redundant provision given in 14.5.5(c)(iii) as below and the available space for adequate support in the hull structure. Securing and supporting devices are to be provided at intervals not exceeding 2.5 m and as close to each corner of the door as is practicable.

(c) Scantlings

(i) Securing and supporting devices are to be adequately designed so that they can withstand the reaction forces within the permissible stresses given in 14.4.3(a) of this Chapter.

(ii) The distribution of the reaction forces acting on the securing devices and supporting devices may require to be supported by direct calculations taking into account the flexibility of the hull structure and the actual position of the supports.

(iii) The arrangement of securing devices and supporting devices in way of these securing devices is to be designed with redundancy so that in the event of failure of any single securing or supporting device

the remaining devices are capable to withstand the reaction forces without exceeding by more than 20% the permissible stresses as given in 14.4.3(a) of this Chapter.

(iv) All load transmitting elements in the design load path, from the door through securing and supporting devices into the ship's structure, including welded connections, are to be to the same strength standard as required for the securing and supporting devices.

14.5.6 Securing and locking arrangement

(a) Systems for operation

(i) Securing devices are to be simple to operate and easily accessible. Securing devices are to be equipped with mechanical locking arrangement (self locking or separate arrangement) or are to be of the gravity type. The opening and closing systems as well as securing and locking devices are to be interlocked in such a way that they can only operate in the proper sequence.

(ii) Doors which are located partly or totally below the freeboard deck with a clear opening area greater than 6 m^2 are to be provided with an arrangement for remote control, from a position above the freeboard deck:

(1) The closing and opening of the doors,

(2) Associated securing and locking of every door.

(iii) For doors which are required to be equipped with a remote control arrangement, indication of the open/closed position of the door and the securing and locking device is to be provided at the remote control stations. The operating panels for operation of doors are to be inaccessible to unauthorized persons. A notice plate, giving instructions to the effect that all securing devices is to be closed and locked before leaving harbor, is to be placed at each operating panel and is to be supplemented by warning indicator lights.

(iv) Where hydraulic securing devices are applied, the system is to keep the door mechanically closed and locked even in the event of loss of hydraulic fluid. The hydraulic system for securing and locking devices is to be isolated from other hydraulic circuits, when in the closed position.

(b) Systems for indication/monitoring

(i) The following requirements apply to doors in the boundary of special category spaces or ro-ro spaces, through which such spaces may be flooded. For cargo ships, where no part of the door is below the uppermost waterline and the area of the door opening is not greater than 6 m^2, then the requirements of this section need not be applied.

(ii) Separate indicator lights and audible alarms are to be provided on the navigation bridge and on each operating panel to indicate that the doors are closed and that their securing and locking devices are properly positioned. The indication panel is to be provided with a lamp test function. It is to not be possible to turn off the indicator light.

(iii) The indicator system is to be designed on the fail-safe principle and is to indicate by visual alarms if the door is not fully closed and not fully locked and by audible alarms if securing devices become open or locking devices become unsecured. The power supply for the indicator system is to be independent of the power supply for operating and closing the doors and is to be provided with a backup power supply. The sensors of the indicator system are to be protected from water, ice formation and mechanical damages.

(iv) The indication panel on the navigation bridge is to be equipped with a mode selection function "harbor/sea voyage", so arranged that audible alarm is given if the vessel leaves harbor with side shell or stern doors not closed or with any of the securing devices not in the correct position.

(v) For passenger ships, a water leakage detection system with audible alarm and television surveillance is to be arranged to provide an indication to the navigation bridge and to the engine control room of any leakage through the doors.

(vi) For cargo ships, a water leakage detection system with audible alarm is to be arranged to provide an indication to the navigation bridge of any leakage through the doors.

14.5.7 Reinforcement around door openings

(a) Shell plating is to be properly rounded at the corners of door openings and is to be reinforced by thicker plate or by doubling plate around the openings.

(b) Where frames are cut at door openings, adequate compensation is to be arranged with web frames at side and stringers or equivalent above and below.

14.5.8 Operating and maintenance manual

(a) An approved operating and maintenance manual for the doors is to be provided on board and contain necessary information on:

(i) Main particulars and design drawings, including:

(1) Special safety precautions;

(2) Details of vessel;

(3) Equipment and design loading (for ramps);

(4) Key plan of equipment (doors and ramps);

(5) Manufacturer's recommended testing for equipment; and

(6) Description of equipment for side doors, stern doors, central power pack, bridge panel, engine control room panel.

(ii) Service conditions, including:

(1) Limiting heel and trim of ship for loading/unloading;

(2) Limiting heel and trim for door operations;

(3) Doors/ramps operating instructions; and

(4) Doors/ramps emergency operating instructions.

(iii) Maintenance, including:

(1) Schedule and extent of maintenance;

(2) Trouble shooting and acceptable clearances; and

(3) Manufacturer's maintenance procedures.

(iv) Register of inspections, including inspection of locking, securing and supporting devices, repairs and renewals.

(b) Documented operating procedures for closing and securing doors are to be kept on board and posted at the appropriate places.

14.6 Ventilators

14.6.1 Height of ventilator coamings

The height of ventilator coamings above the upper surface of the deck is to be at least 900 mm in Position 1 and 760 mm in Position 2 as specified in 18.1.2 of this Part. Where the ship has an unusually large freeboard or where the ventilator serves spaces within unenclosed superstructures, the height of ventilator coamings may be suitably reduced.

14.6.2 Thickness of ventilator coamings

(a) The thickness of ventilator coamings in Positions 1 and 2 specified in 18.1.2 of this Part leading to spaces below the freeboard deck or within enclosed superstructures is not to be less than that given by Line 1 in Table XV 14-4 as below. Where the height of the coamings is reduced by the provisions in 14.6.1 above, the thickness may be suitably reduced.

(b) Where ventilator pass through superstructures other enclosed superstructures, the thickness of ventilator coamings in the superstructures is not to be less than that given by Line 2 in Table XV 14-4 as below.

Table XV 14-4
Thickness of Ventilation Coaming

Inside diameter of ventilator (mm)	Above		70	100	130	160	190
	Not exceeding	70	100	130	160	190	
Thickness of coaming plate (mm)	Line 1	6.3	7.1	8.0	8.8	8.8	8.8
	Line 2	4.5	4.5	4.5	4.5	5.4	6.3

14.6.3 Connection

Ventilaor coamings are to be efficiently connected to the deck and where their height exceeds 900 mm are to be specially supported.

14.6.4 Cowls

Ventilator cowls are to be fitted closely to coamings and are to have housings of not less than 380 mm, except that a smaller housing may be permitted for ventilators of not greater than 200 mm in diameter.

14.6.5 Closing appliances

(a) Ventilators to machinery and cargo spaces are to be provided with a means for closing the openings that is capable of being operated from outside the spaces in case of fire. Furthermore, these ventilators are to be provided with an indicator that enables confirmation whether the shutoff is open or closed from outside of the ventilator as well as suitable means of inspection for closing appliances.

(b) All ventilator openings in exposed positions on the freeboard and superstructure decks are to be provided with efficient weathertight closing appliances. Where the coaming of any ventilator extends to more than 4.5 m above the surface of the deck in Position 1 or more than 2.3 m above the surface of the deck in Position 2 specified in 18.1.2 such closing appliances may be omitted unless required in 14.6.5(a) above.

14.6.6 Ventilators for deckhouses

The ventilators for the deckhouses which protect the companionways leading to the spaces below the freeboard deck are to be equivalent to those for the enclosed superstructures.

14.6.7 Ventilators for emergency generator room

(a) The coamings of ventilators supplying the emergency generator room is to extend to more than 4.5 m above the surface of the deck in Position 1, and more than 2.3 m above the surface of the deck in Position 2 specified in 18.1.2 of this Part. The ventilator openings are not to be fitted with weathertight closing appliances, except for those complying with 14.6.7(b) below. However, where due to the deckhouses which protect the companion ways leading to the spaces below the freeboard deck are to be equivalent to those for the enclosed superstructures.

(b) In cases where ventilation louvers are fitted to emergency generator rooms or closing appliances are fitted to ventilators serving emergency generator rooms, such louvers or closing appliances are to comply with the requirements specified in the following (i) to (iv):

(i) Louvers and closing appliances may either be hand-operated or power-operated (hydraulic, pneumatic or electric) and are to be operable under fire conditions.

(ii) Hand-operated louvers and closing appliances are to comply with the following (1) to (2):

(1) Louvers and closing appliances are to be kept open during normal operation of the vessel.

(2) Corresponding instruction plates are to be provided at the location where hand-operation is provided.

(iii) Power-operated louvers and closing appliance are to comply with the following (1) to (3):

(1) Louvers and closing appliances are to be of a fail-to-open type.

(2) Closed louvers and closing appliances are acceptable during normal operation of the vessel; and.

(3) Power-operated louvers and closing appliances are to be open automatically whenever the emergency generator is starting or in operation.

(iv) Ventilation openings, louvers and closing appliances are to comply with the following (1) to (3):

(1) It is to be possible to close ventilation openings by a manual operation form a clearly marked safe position outside the space where the closing operation can be easily confirmed.

(2) The louver status (open or closed) is to be indicated at the position of the manual operation specified in (1) above.

(3) Closing of the louvers and closing appliances is not to be possible from any other remote position than the position of manual operation specified in (1) above.

14.6.8 Additional requirement for ventilators fitted on exposed fore deck

(a) For ships of 80 m or more in length L, the ventilators located on the exposed deck forward of 0.25L are to be of sufficient strength to resist green sea force if the height of the exposed deck in way of those ventilators is less than 0.1L or 22 m above the designed maximum load line, whichever is smaller. The length L is specified in 3.2.2 of Part II.

(b) This requirement does not apply to the cargo tank venting systems and inert gas systems of tankers, ships carrying liquefied gases in bulk and ships carrying dangerous chemicals in bulk.

14.7 Gangways

Satisfactory means for safety passage required by Regulation 25-1 in the International Convention on Load Lines (ICLL) (in the form of guardrails, life lines, gangways or under deck passages, etc.) are to be provided for the protection of the crew in getting to and from their quarters, the machinery space and all other parts used in the necessary work of the ship.

14.8 Means of Embarkation and Disembarkation

Ships of not less than 500 gross tonnage are to be provided with appropriate means of embarkation on and disembarkation from ships for use in port and in port related operations, unless specially approved by the Society.

Chapter 15
Watertight Bulkheads

15.1 General

15.1.1 Collision bulkhead

(a) A collision bulkhead is to be fitted which is to be watertight up to the bulkhead deck. This bulkhead is to be located at a distance from the forward perpendicular of not less than $0.05L_f$, and, except as may be permitted by the Society, not more than $0.08\ L_f$ or $0.05\ L_f + 3$ m, whichever is greater. Where any part of the ship below the waterline at 85% of the least moulded depth extends forward beyond the forward perpendicular of the length for freeboard, e.g., a bulbous bow, the above-mentioned distance is to be measured from the point either:

(i) at the mid-length of such an extension; or

(ii) at a distance $0.015L_f$ forward from the above-mentioned forward terminal, whichever gives the smallest measurement.

(b) The bulkhead may have steps or recesses provided they are within the limits prescribed in 15.1.1(a) above.

(c) No doors, manholes, access openings, ventilation ducts or any other openings are to be fitted in the collision bulkhead below the bulkhead deck. Where a collision bulkhead extends up to a deck above the freeboard deck in accordance with the requirements of 15.1.5(b) of this Chapter, the number of openings in the extension of the collision bulkhead is to be kept to a necessary minimum and all such openings are to be provided with weathertight means of closing.

(d) The collision bulkhead arrangement in a ship provided with bow doors is to be at the discretion of the Society. Where a sloping ramp forms a part of the collision bulkhead above the bulkhead deck, the part of the ramp which is more than 2.3 m above the bulkhead deck may extend forward of the limit specified in 15.1.1(a) above. In this case, the ramp is to be weathertight over its complete length. However, ramps not meeting the above requirement are to be disregarded as an extension of the collision bulkhead.

15.1.2 After peak bulkhead

(a) Ships are to have an after peak bulkhead situated at a suitable position.

(b) The stern tube is to be enclosed in a watertight compartment by the after peak bulkhead or other suitable arrangements.

15.1.3 At each end of the machinery space, a watertight bulkhead is to be provided.

15.1.4 Hold bulkheads

(a) Cargo ships of an ordinary type, which are not less than 67 meters in length, are to have hold bulkheads in addition to the bulkheads specified in 15.1.1 to 15.1.3 above at reasonable intervals. The total number of watertight bulkheads may not be less than that given by Table XV 15-1 as below.

Table XV 15-1
Total Number of Watertight Bulkheads

Length of ship, L, in m	Total number of bulkheads
$67 \le L < 87$	4
$87 \le L < 90$	5

(b) Where it is impracticable to adhere to the number of hold bulkheads required above due to the requirements for the ship's trade, an alternative arrangement may be accepted subject to the approval by the Society.

15.1.5 Height of watertight bulkheads

The watertight bulkheads required in 15.1.1 to 15.1.4 above are to extend to the freeboard deck with the following exceptions.

(a) A watertight bulkhead in way of the raised quarter or the sunken forecastle deck is to extend up to the captioned deck.

(b) Where a forward superstructure having openings without closing appliances leads to a space below the freeboard deck, or a long forward superstructure is provided, the collision bulkhead is to extend up to the superstructure deck and to be weathertight. However, where the extension is located within the limits specified in 15.1.1 of this Chapter and the part of the deck which forms the step is made effectively weathertight, it need not be fitted directly above the collision bulkhead.

(c) The aft peak bulkhead may terminate at a deck below the freeboard deck and above the designed maximum load line, provided that this deck is watertight to the stern of the ship.

15.1.6 Transverse strength of hull

(a) Where the watertight bulkheads required in 15.1.1 to 15.1.5 of this Chapter are not extended up to the strength deck, deep webs or partial bulkheads situated immediately or nearly above the main watertight bulkheads are to be provided so as to maintain the transverse strength and stiffness of the hull.

(b) Where the length of a hold exceeds 30 meters, suitable means are to be provided so as to maintain the transverse strength and stiffness of the hull.

15.2 Construction of Watertight Bulkheads

15.2.1 The thickness of bulkhead plating is not to be less than that obtained from the following formula:

$$3.2S\sqrt{Kh} + 2.5 \qquad \text{mm}$$

where:

K = Material factor as specified in 1.4.1(b)(i) of this Part.

Where higher strength steels are used, thickness of bulkhead plating is also not to be less than:

$5.9S + 2.5$ (mm)

S = Spacing of stiffeners, in m.

h = Vertical distance, in m, measured from the lower edge of the bulkhead plate to the bulkhead deck at the center line of ship. It is not to be less than 3.4 meters.

15.2.2 Increase in thickness of plates of special parts

(a) The thickness of the lowest strake of bulkhead plating is to be at least 1.0 mm thicker than that obtained from the formula in 15.2.1 above.

(b) The lowest strake of bulkhead plating is to extend at least 610 mm above the top of the inner bottom plating in way of double bottom or 915 mm above the top of keel in way of single bottom. Where the double bottom is provided only on one side of the bulkhead, the extension of the lowest strake is to be up to the higher of the two heights given in the preceding sentence.

(c) The bulkhead plating in the limber is to be at least 2.5 mm thicker than that given in 15.2.1 above.

(d) The bulkhead plating is to be doubled or increased in thickness in way of the stern tube opening or propelling shaft opening, notwithstanding the requirements in 15.2.1 above.

15.2.3 Stiffeners

The section modulus of bulkhead stiffeners is not to be less than that obtained from the following formula:

$2.8KCSH\,l^2$ cm³

where:

K = Material factor as specified in 1.4.1(b)(i) of this Part.

l = Span, in m, measured between the adjacent supports of stiffeners including the length of connection. Where girders are provided, *l* is the distance from the heel of the end connection to the first girder or the distance between the girders.

S = Breadth, in m, of the area supported by the stiffener.

h = Vertical distance, in m, measured from the mid-point of *l* for vertical stiffeners, and from the mid-point of S for horizontal stiffeners, to the top of the bulkhead deck at the center line of the ship. Where the vertical distance is less than 6.0 meters, h is to be taken as 1.2 meters greater than 0.8 times the vertical distance.

C = Coefficient given in Table XV 15-2 as below, according to the type of end connections.

Table XV 15-2
Value of C

Vertical Stiffener				
Lower end	Upper end			
	Lug-connection or supported by horizontal girders	Connection		End of stiffener unattached
		Type A	Type B	
Lug-connection or supported by horizontal girders	1.00	1.00	1.15	1.35
Connected by brackets	0.80	0.80	0.90	1.00
stiffener web attached at end only	1.15	1.15	1.35	1.60
End of stiffener unattached	1.35	1.35	1.60	2.00

Horizontal Stiffener		
The other end	One end	
	Lug-connection, connected by brackets or supported by vertical girders	End of stiffener unattached
Lug-connection, connected by brackets or supported by vertical girders	1.00	1.35
End of stiffener unattached	1.35	2.00

Notes:

(1) Lug-connection is a connection where both webs and face plates of stiffeners are effectively attached to the bulkhead plating, decks or inner bottoms and which are strengthened by effective supporting members on the opposite side of the plating.

(2) "Type A" of vertical stiffeners is a connection by bracket to the longitudinal members or to the adjacent members, in line with the stiffeners, of the same or larger sections. (See Fig. XV 15-1(a) as below)

(3) "Type B" of vertical stiffeners is a connection by bracket to the transverse members such as beams, or other connections equivalent to the connection mentioned above. (See Fig. XV 15-1(b) as below)

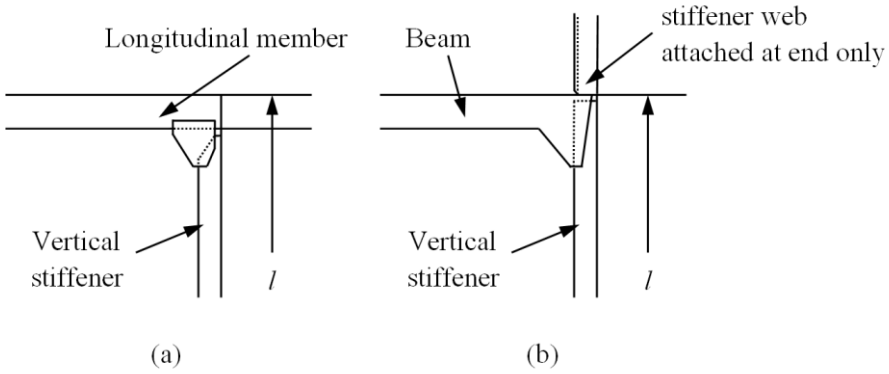

Fig. XV 15-1
Types of End Connections

15.2.4 For collision bulkheads, the plate thickness and section modulus of stiffeners are not to be less than that those specified in 15.2.1 and 15.2.3 above taking h as 1.25 times the specified height.

15.2.5 Construction of corrugated bulkhead is to be in accordance with the requirment given in 14.2.4 of Part II.

15.2.6 Girders supporting bulkhead stiffeners

(a) The section modulus of girders is to be greater than that obtained from the following formula:

$4.75KSh\,l^2$ cm^3

where:

K = Material factor as specified in 1.4.1(b)(i) of this Part.

S = Breadth, in m, of the area supported by the girder.

h = Vertical distance, in m, measured from the mid-point of *l* for vertical girders, and from the mid-point of S for horizontal girders, to the top of the bulkhead deck at the center line of the ship. Where the vertical distance is less than 6.0 meters, h is to be taken as 1.2 meters greater than 0.8 times the vertical distance.

l = Span, in m, measured between the adjacent supports of girders.

(b) The moment of inertia of girders is not to be less than that obtained from the following formula. The depth of girders is not to be less than 2.5 times the depth of slots for stiffeners.

$10Kh\,l^4$ cm^4

where:

K, h and *l* = As specified in (a) above.

(c) The thickness of web plates is not to be less than that obtained from the following formula:

$10S_1 + 2.5$ mm

where:

S_1 = Spacing, in m, of web stiffeners or depth of girders, whichever is smaller.

(d) Tripping brackets are to be provided at intervals of about 3 meters and where the breadth of face plates exceeds 180 mm on either side of the girder, these brackets are to be so arranged as to support the face plates.

15.2.7 Plating of bulkheads, decks, inner bottoms, etc. are to be, if necessary, strengthened at the location of the end brackets of stiffeners and the end of girders.

15.2.8 Bulkhead recesses

(a) In way of bulkhead recesses, beams are to be provided at every frame and under the upper bulkhead in accordance with the requirements in 10.3.3 of this Part and 15.2.3 of this Chapter taking the beam spacing as the stiffener spacing. Where the lower end of the upper bulkhead is especially strengthened, the beam under the upper bulkhead may be dispensed with.

(b) The thickness of deck plating forming the top of bulkhead recesses is to be at least 1.0 mm greater than that given by 15.2.1 of this Chapter, regarding the deck plating as bulkhead plating and the beams as stiffeners. However, the thickness is not to be less than that required for deck plating in that location.

(c) The thickness of pillars supporting bulkhead recesses are to be determined taking into account the water pressure that might be applied on the upper surface of the recesses, and their end connections are to be sufficiently strong enough to withstand the water pressure which might be applied on the under surface.

15.2.9 Where stiffeners are cut or the spacing of stiffeners is increased in order to provide the watertight door in the bulkhead, the opening is to be suitably framed and strengthened as to maintain the full strength of the bulkhead. The door frames are not to be considered as stiffeners.

15.3 Watertight Doors

The requirements of watertight doors include types, strength, watertightness, control, indication, source of power, notices, sliding doors, hinged doors, and rolling doors are required by the 14.3 of Part II.

15.4 Other Watertight Construction

For the application of this Chapter, trunks required to maintain watertightness are to be capable of withstanding internal or external pressure under the most severe conditions at the intermediate or final stages of flooding.

Chapter 16

Arrangements to Resist Panting

16.1 General

16.1.1 The requirements in this Chapter apply to the bottom and the side constructions in way of both peaks. The side frames are to be in accordance with the requirements of Chapter 6 of this Part.

16.1.2 In fore and after peaks to be used as deep tanks, effective swash plates are to be provided at the center line of the ship or the scantlings of structural members are to be suitably increased.

16.1.3 Where the angle between the web of stringers and the shell plating is extremely small, the scantlings of stringers are to be suitably increased above the normal requirements and where necessary, appropriate supports are to be provided to prevent tripping.

16.2 Arrangements to Resist Panting Forward of Collision Bulkhead

16.2.1 Arrangement and construction

(a) A deep center girder or centerline longitudinal bulkhead is to be provided in the forward direction of the collision bulkhead.

(b) In fore peaks constructed of transverse framing, floors having sufficient height are to be arranged at every frame and they are to be supported by the side girders provided at an interval not exceeding about 2.5 meters. Frames are to be supported by the constructions specified in 16.2.2(e) to (g) as below of this Chapter at intervals about 2.5 meters.

(c) In fore peaks of longitudinal framing, bottom transverse supporting bottom longitudinals and side transverse supporting side longitudinals are to be arranged at intervals about 2.5 meters. Bottom transverses and side transverses are to be supported by side girders and side stringers, or cross tie provided at intervals about 4.6 m, respectively. And side transverses and bottom transverses are to be effectively connected to each other.

16.2.2 Transverse framing systems

(a) The thickness of floors and center girders are not to be less than that obtained from the following formula:

$0.045L + 5.5$ mm

(b) The floors are to be of adequate depth and to be properly stiffened with stiffeners as may be required.

(c) The upper edges of the floors and center girders are to be properly stiffened.

(d) The thickness of side girder is to be approximately equal to that of center girders, and side girders are to extend to appropriate heights proportionate to those of the floors.

(e) Where the panting beams are provided at every frame and the beams are covered with perforated steel plates from one side of the ship to the other side, the scantlings of panting beams and steel plates are not to be less than that obtained from the following formulae:

Sectional area of panting beams: $0.1L + 5$ cm^2
Thickness of steel plates: $0.02L + 5.5$ mm

(f) Where the side stringers are provided, their scantlings are not to be less than that obtained from the following formulae:

Web depth : 0.2 l meters, 2.5 times the depth of slots for transverse frames or the value obtained from the following formula, whichever is the greatest: 0.0053L + 0.25 (m)

Web thickness : 0.02L + 6.5 (mm)

Section modulus : $8Shl^2$ (cm^3)

where:

S = Breadth, in m, of area supported by the side stringer.

h = Vertical distance, in m, from the center of S to a point of 0.12L (m) above the top of keel. However, where h is less than that 0.06L m, h is to be taken as 0.06L (m).

l = Horizontal distance, in m, between the supporting points of side stringers.

(g) Where panting beams are provided at alternate frames together with stringer plates connected to the shell plating, the scantling of panting beams and stringer plates are to comply with following requirements.

(i) The sectional area of panting beams is not to be less than that obtained from the following formula:

0.3L cm^2

(ii) The scantlings of stringer plates are not to be less than that obtained from the following formulae:

Breadth: 5.3L + 250 mm
Thickness: 0.02L + 6.5 mm

16.2.3 Longitudinal framing

(a) Where the bottom transverses are supported along the center line, their scantlings are not to be less than that obtained from the following formulae:

Web depth : 0.2 l (m) or 0.0085L + 0.18 (m), whichever is greater.

Web thickness : $0.005\frac{SLl}{d_1}+2.5$ (mm), or $4+0.6\sqrt{L}$ (mm), whichever is greater

Section modulus : $1.2SLl^2$ (cm^3)

where:

S = Spacing, in m, of transverses.

d_1 = Depth, in m, of transverses subtracted by the depth of slot for longitudinals.

l = Length, in m, of transverses between the supporting points.

(b) The scantlings of center girders are not to be less than those of bottom transverses specified in 16.2.3(a) above.

(c) The scantlings of side transverses supporting longitudinals are not to be less than that obtained from the following formulae:

Web depth : $0.2l_0$ (m), 0.0053L + 0.25 (m) or 2.5 times the depth of slots for longitudinals, whichever is the greatest.

Web thickness : $0.042\frac{Shl_0}{d_1}+2.5$ (mm), or 0.02L + 6.5 (mm), whichever is greater

Section modulus : $8Sh\,l_0^2$ (cm^3)

where:

S = Spacing, in m, of transverses.

d_1 = Refer to the definition of 16.2.3(a) of this Chapter.

h = Vertical distance, in m, from the center of l_0 to a point of 0.12L (m) above the top of keel. However, where h is less than that 0.06L (m), h is to be taken as 0.06L (m).

l_0 = Length, in m, of side transverses between the supporting points.

(d) Side transverses are to be provided with tripping brackets at intervals not exceeding about 3 meters and stiffeners are to be provided on the webs at every longitudinal.

(e) The scantlings of side stringers which support side transverses are not to be less than that obtained from the following formulae:

Web depth : $0.2\, l_1$ (m) or 0.0053L + 0.25 (m) whichever is greater.

Web thickness : $0.031\dfrac{\mathrm{Sh}l_1}{\mathrm{d}_1} + 2.5$ (mm), or 0.02L + 6.5 (mm), whichever is greater

Section modulus : $4\mathrm{Sh}\, l_0 l_1$ (cm^3)

where:

S = Breadth, in m, of area supported by the stringer.

d_1 = Depth, in m, of side stringers subtracted by the depth of slot.

h = Vertical distance, in m, from the center of S to a point of 0.12L (m) above the top of keel. However, where h is less than that 0.06L (m), h is to be taken as 0.06L (m).

l_0 = Length, in m, of side transverses between the supporting points.

l_1 = Length, in m, of side stringers.

(f) The scantlings of cross ties supporting the side transverses are not to be less than that obtained from the following formulae:

Sectional area:

Where $\dfrac{l}{\mathrm{k}}$ is 0.6 and above: $\dfrac{0.77\mathrm{Sbh}}{1 - 0.5\left(\dfrac{l}{\mathrm{k}}\right)}$ cm^2

Where $\dfrac{l}{\mathrm{k}}$ is less then 0.6: $1.1\mathrm{Sbh}$ cm^2

where:

S = Spacing, in m, of transverses.

b = Breadth, in m, of area supported by the cross ties.

h = Vertical distance, in m, from the center of b to a point of 0.12L (m) above the top of keel. However, where h is less than that 0.06L (m), h is to be taken as 0.06L (m).

l = Length, in m, of cross ties.

k = $\sqrt{\dfrac{\mathrm{I}}{\mathrm{A}}}$

I = The least moment of inertia, in cm^4, of the cross ties.

A = Sectional area, in cm^2, of the cross ties.

(g) Cross ties are to be effectively connected to the transverses by brackets or other suitable arrangements and the transverses are to be provided with tripping brackets in way of the cross ties.

(h) Where the breadth of face plate of cross ties on either side of the web exceeds 150 (mm), stiffeners are to be provided on the webs and so arranged as to support the face plate at suitable interval.

16.3 Arrangements to Resist Panting abaft of After Peak Bulkhead

16.3.1 The requirements in 16.2.2 of this Chapter apply to the scantlings and arrangement of floors in the after peak.

16.3.2 Where the distance between the supports at any part of the girth of frames exceeds 2.5 meters, the scantlings of frames are to be increased, or side stringers or struts are to be additionally provided to give adequate stiffness to the side structure.

16.3.3 Where the constructions in after peak are in compliance with the requirements for fore peak in 16.2 of this Chapter, the scantlings of transverses, stringers, and struts are to be 0.67 times the values specified in 16.2 of this Chapter.

Chapter 17

Deep Tanks

17.1 General

17.1.1 Definition

The deep tank is a tank used for the carriage of water, fuel oil and other liquids, forming a part of the hull in holds or tween decks. Deep tanks used for the carriage of oils that need to be especially specified are designated as "deep oil tanks".

17.1.2 Application

(a) Peak tank bulkheads and boundary bulkheads of deep tanks (excluding deep tanks carrying oil with a flash point of less than 60°C) are to be constructed in compliance with the requirements of this Chapter. If the bulkhead part of the deep tank is used as a watertight bulkhead, the bulkhead part is to be in compliance with the requirements of Chapter 15 of this Part.

(b) Deep tank bulkheads used to carriage oil with a flash point below 60°C are to be in compliance with the requirements of this Chapter and additional requirements of Chapter 2 and Chpater 2A of Part III.

17.1.3 Tank division

(a) Deep tanks are to be of a proper size and to be provided with such longitudinal watertight divisions as necessary to meet the requirements for stability in service conditions as well as while the tanks are being filled or discharged.

(b) Tanks for fresh water or fuel oil or those which are not intended to be kept entirely filled in service conditions are to have additional divisions or deep wash plates as necessary, to minimize the dynamic forces acting on the structure.

(c) Where it is impracticable to comply with the requirements in (b) above, the scantlings required in this Chapter are to be properly increased.

(d) Longitudinal watertight divisions which will be subjected to pressure from both sides in tanks which are to be entirely filled or emptied in service conditions may be of the scantlings required for ordinary watertight bulkheads as stipulated in Chapter 15 of this Part. In such cases, the tanks are to be provided with fittings such as deep hatches and inspection plugs in order to ensure that the tanks are kept full in service conditions.

17.2 Deep Tank Bulkheads

17.2.1 Application

The construction of bulkheads and decks forming boundaries of deep tanks is to be in accordance with the requirements in Chapter 15 of this Part, unless otherwise specified in this Chapter.

17.2.2 Bulkhead plates

The thickness of deep tank bulkhead plating is not to be less than that obtained from the following formula:

$$3.6S\sqrt{Kh} + 3.5 \qquad \text{mm}$$

where:

K = Material factor as specified in 1.4.1(b)(i) of this Part.

S = Spacing of stiffeners, in m.

h = Greater of the distances given below:

- Vertical distance, in m, measured from the lower edge of plate to the midpoint of the distance between the top of tanks and the top of overflow pipes.
  However, for bulkheads of large tanks, additional water pressure is to be appropriately considered.
- 0.7 times the vertical distance, in m, measured from the lower edge of the plate to the point 2.0 m above the top of the overflow pipes.

17.2.3 Bulkhead stifferners

The section modulus of bulkhead stiffeners is not to be less than that obtained from the following formula:

$7KCSh\,l^2$ cm^3

where:

K = Material factor as specified in 1.4.1(b)(i) of this Part.

S and l = As specified in 15.2.3 of this Part.

h = Greater of the vertical distances given below, with the lower end being regarded as the mid-point of l for vertical stiffeners and as S for horizontal stiffeners.

- Vertical distance, in m, measured from the lower end to the midpoint of the distance between the top of the tanks and the top of the overflow pipes.
  However, for bulkheads of large tanks, additional water pressure is to be appropriately considered.
- 0.7 times the vertical distance, in m, measured from the lower end to the point 2.0 m above the top of the overflow pipes.

C = Coefficient given in Table XV 17-1 as below, according to the type of end connections.

Table XV 17-1
Values of C

The other end of stiffeners		One end of stiffeners			
		Lug-connection or supported by girders	Connection		End of stiffener unattached
			Type A	Type B	
Lug-connection or supported by girders		1.0	0.85	1.30	1.50
Connection	Type A	0.85	0.70	1.15	1.30
	Type B	1.30	1.15	0.85	1.15
End of stiffener unattached		1.50	1.30	1.15	1.50

Notes:

(1) "Type A" is a connection by bracket of the stiffener to the double bottom or to a stiffener of equivalent strength attached to the face plates of adjacent members, or a connection of equivalent strength. (See Fig. XV 15-1 (a) of this Part)

(2) "Type B" is a connection by bracket of the stiffener to transverse members such as beams, frames or the equivalent thereto. (See Fig. XV 15-1 (b) of this Part)

17.2.4 Girders supporting bulkhead stiffeners

(a) The section modulus of girders is not to be less than that obtained from the following formula:

$7.13KSh\,l^2$ cm^3

where:

K = Material factor as specified in 1.4.1(b)(i).

S = Breadth, in m, of the area supported by the girders.

h = Vertical distance, in m, measured from the mid-point of S for horizontal girders, and from the mid-point of l for vertical girders, to the top of h specified in 17.2.3 of this Chapter.

l = Span, in m, measured between the adjacent supports of girders.

(b) The moment of inertia of girders is not to be less than that obtained from the following formula. The depth of girders is not to be less than 2.5 times the depth of slots for stiffeners.

$30Kh\,l^4$ cm^4

where:
K, h and l = As specified in (a) above.

(c) The thickness of web plates is not to be less than that obtained from the following formulae:

$10S_1 + 3.5$ mm

where:
S_1 = Spacing,in m, of web stiffeners or the depth of girders, whichever is smaller.

17.2.5 Cross ties

(a) Where efficient cross ties are provided across deep tanks connecting girders on each side of the tanks, the span of girders specified in 17.2.4 above may be measured between the end of the girder and the centre line of the cross tie or between the centre lines of adjacent cross ties.

(b) The sectional area of cross ties is not to be less than that obtained from the following formula:

$1.3Sb_sh$ cm^2

where:
h and S = As specified in 17.2.4 above.
b_s = Breadth, in m, of the area supported by the cross ties.

(c) The ends of cross ties are to be bracketed to girders.

17.2.6 Top and bottom construction

The scantlings of the members forming the top or the bottom of deep tanks are to be in accordance with the requirements in this Chapter, where the members are treated as if they were members forming a deep tank bulkhead at that location. The scantlings of the members are not to be less than that required by the other requirements for the construction of the tank top as well as the bottom. For top plating of deep tanks, the thickness of plates is to be at least 1 mm greater than that of the thickness specified in 17.2.2 of this Chapter.

17.2.7 Scantlings of members not in contact with sea water

The thickness of plates of bulkheads and girders which are not in contact with sea water in service conditions may be reduced from the requirements in 17.2.2 and 17.2.4(c) of this Chapter by the values given below:

- For plates with only one side in contact with sea water: 0.5 mm
- For plates with neither side in contact with sea water: 1.0 mm

However, bulkhead plates in way of locations such as bilge wells are to be regarded as plates in contact with sea water.

17.2.8 Corrugated bulkhead

Construction of corrugated bulkheads is to be in accordance with the requirements given in 16.2.4 of Part II of Rules.

17.3 Fittings of Deep Tanks

17.3.1 Limbers and air holes

Limbers and air holes are to be cut suitably in the structural members to ensure that air or water does not remain stagnated in any part of the tank.

17.3.2 Drainage from top of tanks

Efficient arrangements are to be made for draining bilge water from the top of deep tanks.

17.3.3 Inspection Plugs

The inspection plugs provided on deep tank tops as required in 17.1.3 of this Chapter are to be located in readily accessible positions, and the plugs are to be open as far as is practicable when filling the tank with water.

17.3.4 Cofferdams

(a) Oiltight cofferdams are to be provided between the tanks carrying oils and those carrying fresh water, such as for personnel use or boiler feed water, to prevent the fresh water from being contaminated by the oil.

(b) Crew spaces and passenger spaces are not to be directly adjacent to tanks carrying fuel oil. Such compartments are to be separated from the fuel oil tanks by cofferdams which are well ventilated and accessible. Where the top of fuel oil tanks have no opening and is coated with incombustible coverings of not less than 38 mm in thickness, the cofferdam between such compartments and the top of the fuel oil tanks may be omitted.

Chapter 18

Hatchways, Machinery Space Openings and Other Deck Openings

18.1 General

18.1.1 The requirements in this Chapter may be specially considered for the ship with an unusually large freeboard.

18.1.2 Definitions

(a) Position of exposed deck openings

For the purpose of this Chapter, two positions of exposed deck openings are defined as follows:

(i) Position 1

Upon exposed freeboard and raised quarter decks, and upon exposed superstructure decks situated forward of a point located a quarter of the ship's length for freeboard, L_f, abaft the fore end of L_f.

(ii) Position 2

Upon exposed superstructure decks situated abaft a quarter of L_f abaft the fore end of L_f and located at least one standard height of superstructure above the freeboard deck, or upon exposed superstructure decks situated forward of a point located a quarter of L_f abaft the fore end of L_f and located at least two standard heights of superstructure above the freeboard deck.

(b) Hatchways

Hatchways are openings, generally rectangular, in a ship's deck affording access into the compartment below. Also called hatches.

(c) Hatch covers

Hatch cover are wooden or steel covers fitted over a hatchway to prevent the ingress of water into the ship's hold and may also be the supporting structure for deck cargo.

(d) Hatch coamings

Hatch coamings are the vertical plating built around the hatchways to prevent water from entering the hold; and to serve as a framework for the hatch covers.

18.2 Hatchways

18.2.1 Application

(a) The construction and the means for closing of cargo and other hatchways are to be in compliance with the requirements in this Section.

(b) Notwithstanding the provisions in this paragraph, the construction and means for closing of cargo and other hatchways of bulk carriers defined in Chapter 1 and Chapter 1A of Part III and ships intended to be registered as bulk carriers are to be at the discretion of the Society.

(c) When the loading condition or the type of construction differs from that specified in this section, the calculation method used is to be as deemed appropriate by the Society.

18.2.2 General requirement

(a) Primary supporting members and secondary stiffeners of hatch covers are to be continuous over the breadth and length of hatch covers. When this is impractical, appropriate arrangements are to be adopted to ensure sufficient load carrying capacity and sniped end connections are not to be allowed.

(b) The spacing of primary supporting members parallel to the direction of secondary stiffeners is not to exceed 1/3 of the span of the primary supporting members.

(c) Secondary stiffeners of hatch coamings are to be continuous over the breadth and length of said hatch coamings.

18.2.3 Net scantling approach

(a) Unless otherwise specified, the structural scantlings specified in this section are to be net scantlings which do not include any corrosion additions.

(b) "Net scantlings" are the scantlings necessary to obtain the minimum net scantlings required by 18.2.5 and 18.2.9 of this Chapter.

(c) Required gross scantlings are not to be less than the scantlings obtained from adding the corrosion addition t_c specified in (d) below to the net scantlings obtained from the requirements in this section.

(d) The corrosion addition t_c is to be taken as specified in Table XV 18-1 of this Chapter according to ship type, the type of structure and structural members of steel hatchway covers, steel pontoon covers and steel weathertight covers (hereinafter referred to as "steel hatch covers"). However, the corrosion additions for structural members that make up hatchway coamings are to be as deemed appropriate by the Society when their t_c values are not specified in Table XV 18-1 of this Chapter.

(e) Strength calculations using beam theory, grillage analysis or FEM are to be performed with net scantlings.

18.2.4 Design loads

The design loads for steel hatchway covers, steel pontoon covers, steel weathertight covers, portable beams and hatchway coamings applying the requirements in this Section are specified in following (a) to (e):

(a) Design vertical wave load P_V, in kN/m^2, is not to be less than that obtained from Table XV 18-2 of this Chapter. Design vertical wave loads need not to be combined with cargo loads according to (c) and (d) below simultaneously.

(b) Design horizontal wave load P_H, in kN/m^2, is not to be less than that obtained from the following formulae. However, P_H is not to be taken less than the minimum values given in Table XV 18-3 of this Chapter. P_H need not be included in the direct strength calculation of the hatch cover, except where structures supporting stoppers are assessed.

$P_H = ac\ (bC_1 - y)$

where:

a = $20 + \frac{L}{12}$ for unprotected front coamings and hatch cover skirt plates

= $10 + \frac{L}{12}$ for unprotected front coamings and hatch cover skirt plates, where the distance from the actual freeboard deck to the summer load line exceeds the minimum non-corrected tabular freeboard according to the ILCC by at least one superstructure standard height

= $5 + \frac{L}{15}$ for side and protected front coamings and hatch cover skirt plates

= $7 + \frac{L}{100} - 8\frac{x}{L}$ for aft ends of coamings and aft hatch cover skirt plates abaft amidships

= $5 + \frac{L}{100} - 4\frac{x}{L}$ for aft ends of coamings and aft hatch cover skirt plates forward of amidships

L = Length of ship as specified in 1.5.1 of this Part.

C_1 = As given by the following formulae:

= $10.75 - \left(\frac{300 - L}{100}\right)^{1.5}$

c_L = Coefficient to be taken as 1.0

b = As given by the following formulae:

= $1.0 + \left(\frac{0.45 - \frac{x}{L}}{C_{b1} + 0.2}\right)^2$ for $\frac{x}{L} < 0.45$

= $1.0 + 1.5\left(\frac{\frac{x}{L} - 0.45}{C_{b1} + 0.2}\right)^2$ for $\frac{x}{L} \geq 0.45$

x = Distance, in m, from the hatchway coamings or hatch cover skirt plates to after perpendicular, or distance from the mid-point of the side hatchway coaming or hatch cover skirt plates to after perpendicular. However, where the length of the side hatchway coaming or hatch cover skirt plates exceeds 0.15 L, the side hatchway coaming or hatch cover skirt plates are to be equally subdivided into spans not exceeding 0.15 L and the distance from the mid-point of the subdivisions to the after perpendicular is to be taken.

C_{b1} = Block coefficient. However, where C_b is 0.6 or under, C_{b1} is to be taken as 0.6 and where C_b is 0.8 and over, C_{b1} is to be taken as 0.8. When determining scantlings of the aft ends of coamings and aft hatch cover skirt plates forward of amidships, C_{b1} does not need to be taken as less than 0.8.

c = As given by the following formula. However, where $\frac{b'}{B'}$ is less than 0.25, $\frac{b'}{B'}$ is to be taken as 0.25.

= $0.3 + 0.7\frac{b'}{B'}$

b' = Breadth, in m, of hatchway coamings at the position under consideration

B' = Breadth, in m, of ship on the exposed weather deck at the position under consideration

y = Vertical distance, in m, from the designed maximum load line to the mid-point of the span of stiffeners when determining the scantlings of stiffeners and to the mid-point of the plating when determining the thickness of plating

(c) The load on hatch covers due to cargo loaded on said covers is to be obtained from the following (i) and (ii). Load cases with partial loading are also to be considered.

(i) Distributed load due to cargo load P_{cargo}, in kN/m^2, resulting from heave and pitch (i.e., ship in upright condition) is to be determined according to the following formula:

$P_{cargo} = P_C (1 + a_v)$

where:

P_C = Static uniform cargo load, in kN/m^2

a_v = Vertical acceleration addition given by the following formula:

$$a_v = \frac{0.11 \times mV'}{\sqrt{L}}$$

m = As given by the following formulae:

$$= m_0 - 5(m_0 - 1)\frac{x}{L} \qquad \text{for } 0 \le \frac{x}{L} \le 0.2$$

$$= 1.0 \qquad \text{for } 0.2 < \frac{x}{L} \le 0.7$$

$$= 1 + \frac{m_0 + 1}{0.3}\left(\frac{x}{L} - 0.7\right) \qquad \text{for } 0.7 < \frac{x}{L} \le 1.0$$

m_0 = As given by the following formula:

$$m_0 = 1.5 + \frac{0.11V'}{\sqrt{L}}$$

V' = Speed of ship, in knots, specified in 1.2.7 of Part II of Rules. However, where V' is less than $\sqrt{L}$, V' is to be taken as $\sqrt{L}$.

x and L = As specified in (b) above

(ii) Point load F_{cargo} , in kN, due to a single force resulting from heave and pitch (i.e., ship in upright condition) is to be determined by the following formula. However, container loads are to comply with the provisions of (d) below.

$$F_{cargo} = F_s(1+a_v)$$

where:

F_S = Static point load due to cargo, in kN

a_v = As specified in (i) above

(d) Where containers are stowed on hatch covers, cargo loads determined by following (i) to (iii) are to be considered:

(i) Cargo loads, in kN, acting on each corner of a container stack, due to heave, pitch and roll motion of the ship (ie., ship in heel condition) are to be determined by the following formulae (see Fig. XV 18-1). When the load case of a partially loaded container is considered, the cargo load is at the discretion of the Society.

$$A_z = 9.81\frac{M}{2}(1 + a_v)\left(0.45 - 0.42\frac{h_m}{b}\right)$$
$$B_z = 9.81\frac{M}{2}(1 + a_v)\left(0.45 + 0.42\frac{h_m}{b}\right)$$
$$B_Y = 2.4M$$

where:

M = Maximum designed mass of container stack, in ton

$$= M = \sum W_i$$

h_m = Design height of the centre of gravity of the stack above hatch cover top plates, in m, may be calculated as the weighted mean value of the stack, where the centre of gravity of each tier is assumed to be located at the centre of each container.

$$= h_m = \sum \frac{(z_i W_i)}{M}$$

z_i = Distance from hatch cover top plate to the centre of i-th container, in m

W_i	=	Weight of i-th container, in ton
b	=	Distance between mid-points of foot points, in m
A_Z and B_Z	=	Support forces in vertical direction, in kN, at the forward and aft stack corners
B_Y	=	Support force, in kN, in transverse direction at the forward and aft stack corners
a_v	=	As specified in (c) above

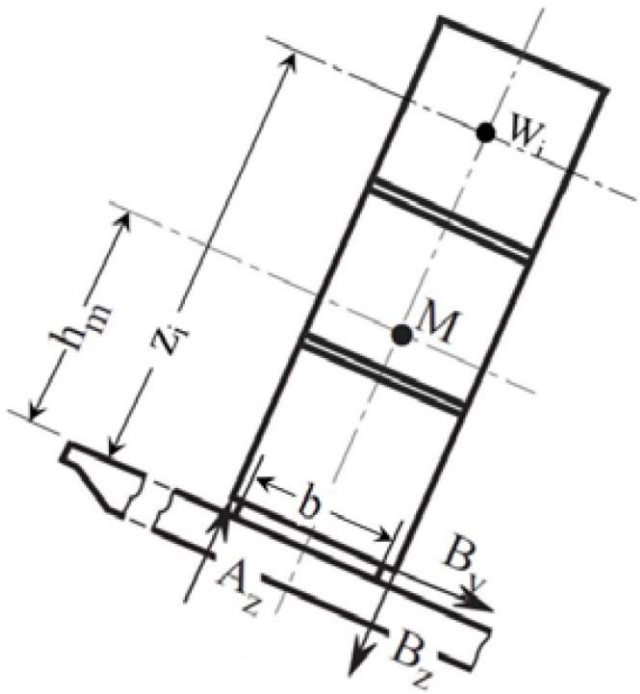

Fig. XV 18-1
Forces due to Container Loads

(ii) Details of the application of (i) above are to be in accordance with the following:

(1) When the strength of a hatch cover structure is assessed by grillage analysis according to 18.2.5(e) below, h_m and z_i need to be measured from the hatch cover supports, not hatch cover top plates. Force B_Y does not need to be considered in this case.

(2) The values of A_Z and B_Z applied for the assessment of hatch cover strength are to be shown in the drawings of the hatch covers.

(3) It is recommended that container loads, as calculated in (i) above, be considered as the limit for foot point loads of container stacks in cargo securing (container lashing) calculations.

(iii) Stack load P_{stack} ,in kN, acting on each corner of a container stack, due to heave and pitch (i.e., ship in upright condition) is to be determind by the following formula.

$$P_{stack} = 9.81\frac{M}{4}(1 + a_v)$$

where:

a_v = As specified in 18.2.4(c) above

M = As specified in (i) above

(e) In addition to the loads specified in (a) to (d) above, when the load in the ship's transverse direction by forces due to elastic deformation of the ship's hull is acting on the hatch covers, the sum of stresses is to be in compliance with the permissible values specified in 18.2.5(a)(i) below.

18.2.5 Strength criteria of steel hatch covers and hatch beams

(a) Permissible stresses and deflections

(i) The equivalent stress σ_E, in N/mm^2, in steel hatchway covers and steel weathertight covers are to be in compliance with the criteria in the following (1) and (2):

(1) For grillage analysis:

$$\sigma_E = \sqrt{\sigma^2 + 3\tau^2} \leq 0.8\sigma_F$$

where:

σ = Nominal stress, in N/mm^2

τ = Shear stress, in N/mm^2

σ_F = Minimum upper yield stress, in N/mm^2, or proof stress, in N/mm^2, of the material. However, when material with σ_F of more than 355 N/mm^2 is used, the value for σ_F is to be taken as deemed appropriate by the Society.

(2) For FEM calculations, in cases where the calculations use shell or plane strain elements, the stresses are to be taken from center of the individual element.

$$\sigma_E = \sqrt{\sigma_x^2 - \sigma_x\sigma_y + \sigma_y^2 + 3\tau^2} \leq 0.8\sigma_F, \text{when assessed using the design load specified in 18.2.4(a),}$$

$$\sigma_E = \sqrt{\sigma_x^2 - \sigma_x\sigma_y + \sigma_y^2 + 3\tau^2} \leq 0.9\sigma_F, \text{when assessed using any other design loads}$$

where:

σ_x = Normal stress, in N/mm^2, in the x-direction

σ_y = Normal stress, in N/mm^2, in the y-direction

τ = Shear stress, in N/mm^2, in the x-y plane

x, y = Coordinates of a two dimensional Cartesian system in the plane of the considered structural element

σ_F = As specified in (1) above

(ii) The equivalent stress σ_E, in N/mm^2, in steel pontoon covers and hatch beams is not to be greater than $0.68\sigma_F$, where σ_F is as specified in (i) above.

(iii) For FEM calculations, equivalent stress σ_E, in N/mm^2, in girders with unsymmetrical flanges of steel hatchway covers and steel weathertight covers is to be determined according to the following (1) and (2):

(1) FEM calculations using the stress obtained for fine mesh elements.

(2) FEM calculations using the stress at the edge of the element or the stress at the centre of the element, whichever is greater.

(iv) Deflection is to be in compliance with following (1) and (2):

(1) When the design vertical wave load specified in 18.2.4(a) of this Chapter is acting on steel hatchway covers, steel pontoon covers, steel weathertight covers and portable beams, the vertical deflection of primary supporting members is not to be taken as more than that given by the following:

0.0056 l for steel hatchway covers and steel weathertight covers
0.0044 l for steel pontoon covers and hatch beams
where l = Span of primary supporting members, in m.

(2) Where hatch covers are arranged for carrying containers and mixed stowage is allowed, i.e., a 40-foot container is stowed on top of two 20-foot containers, particular attention is to be paid to the deflections of hatch covers. In addition the possible contact of deflected hatch covers within hold cargo has to be observed.

(b) Local net plate thickness of steel hatch covers

(i) The local net thickness t_{net}, in mm, of steel hatch cover top plating is not to be less than that obtained from the following formula, and it is not to be less than 1% of the spacing of the stiffeners or 6 mm, whichever is greater:

$$t_{net} = 15.8F_P S\sqrt{\frac{P_{HC}}{0.95\sigma_F}}$$

where:

F_P = Coefficient given by the following formula:

$= \frac{1.9\sigma}{\sigma_a}$ (for $\frac{\sigma}{\sigma_a} \geq 0.8$, for the attached plate fiange of primary supporting members)

$= 1.5$ (for $\frac{\sigma}{\sigma_a} < 0.8$, for the attached plate flange of primary supporting members)

σ = Maximum normal stress, in N/mm^2, of the attached plate flange of primary supporting members. (see Fig. XV 18-2 of this Chapter).

σ_a = Permissible stress, in N/mm^2, is to be as given by following formula:

$\sigma_a = 0.8\sigma_F$

S = Stiffener spacing, in m

P_{HC} = Design load, in kN/m^2, specified in 18.2.4(a) and 18.2.4(c)(i) of this Chapter

σ_F = Minimum upper yield stress or proof stress of the material, in N/mm^2

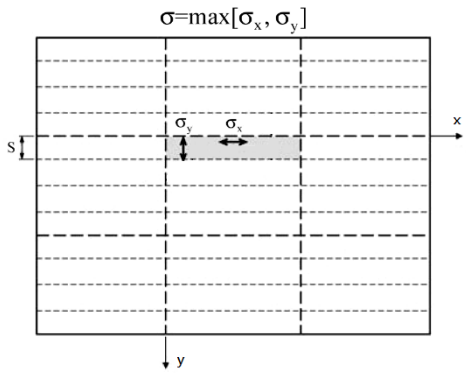

Fig. XV 18-2
Determination of the Normal Stress of Hatch Cover Plating

(ii) The net thickness of double skin hatch covers and box girders is to be obtained in accordance with 18.2.5(e) below taking into consideration of the permissible stresses specified in 18.2.5(a)(i) above.

(iii) When the lower plating of double skin hatch covers is taken into account as a strength member of the hatch cover, the net thickness t_{net}, in mm, of the lower plating is not to be less than 5 mm.

(iv) When lower plating is not considered to be a strength member of the hatch cover, the thickness of the lower plating is to be determined as deemed appropriate by the Society.

(v) When cargo likely to cause shear buckling is intended to be carried on a hatch cover, the net thickness t_{net} ,in mm, is not to be less than that obtained from following formulae. In such cases, cargo likely to cause shear buckling refers particularly to especially large or bulky cargo lashed to the hatch cover, such as parts of cranes or wind power stations, turbines, etc. Cargo that is considered to be uniformly distributed over the hatch cover(e.g., timber, pipes or steel coils) does not need to be considered.

$t_{net} = 6.5S$
$t_{net} = 5$

where:

S = Stiffener spacing, in m

(c) Net scantling of secondary stiffeners

(i) The net section modulus Z_{net}, in cm^3, of the secondary stiffeners of hatch cover top plates, based on stiffener net member thickness, is not to be less than that obtained from the following formula. The net section modulus of the secondary stiffeners is to be determined based on an attached plate width that is assumed to be equal to the stiffener spacing.

$$Z_{net} = \frac{104SP_{HC}l^2}{\sigma_F} \text{ for the design loads specified in 18.2.4(a) of this Chapter}$$

$$Z_{net} = \frac{93SP_{HC}l^2}{\sigma_F} \text{ for the design loads specified in 18.2.4(c)(i)of this Chapter}$$

where:

l = Secondary stiffener span, in m, is to be taken as the spacing of primary supporting members or the distance between a primary supporting member and the edge support, as applicable.

S = Stiffener spacing, in m

P_{HC} = Design load, in kN/m^2, as specified in 18.2.5(b)(i) above

σ_F = Minimum upper yield stress or proof stress of the material, in N/mm^2

(ii) The net shear sectional area A_{net}, in cm^2, of the secondary stiffener webs of hatch cover top plates is not to be less than that obtained from the following formula:

$$A_{net} = \frac{10.8SP_{HC}l}{\sigma_F} \text{ for the design loads specified in 18.2.4(a) of this Chapter}$$

$$A_{net} = \frac{9.6SP_{HC}l}{\sigma_F} \text{ for the design loads specified in 18.2.4(c)(i) of this Chapter}$$

where:

l, S, P_{HC}, σ_F = As specified in (i) above

(iii) For flat bar secondary stiffeners and buckling stiffeners, the following formula is to be applied:

$$\frac{h}{t_{W,net}} \leq 15\sqrt{k}$$

where:

h = Height, in mm, of the stiffener

$t_{W,net}$ = Net thickness, in mm, of the stiffener

k = $235/\sigma_F$

σ_F = As specified in (i) above

(iv) Stiffeners parallel to primary supporting members and arranged within the effective breadth according to 18.2.5(e)(ii) below are to be continuous at crossing primary supporting member and may be regarded for calculating the cross sectional properties of primary supporting members.

(v) The combined stress of those stiffeners induced by the bending of primary supporting members and lateral pressures is not to exceed the permissible stresses according to 18.2.5(a)(i) above.

(vi) For hatch cover stiffeners under compression, sufficient safety against lateral and torsional buckling according to 18.2.5(f)(iii) below is to be verified.

(vii) For secondary stiffeners of the lower plating of double skin hatch covers, the requirements in (i) and (ii) above do not need to be applied due to the absence of lateral loads.

(viii) The net thicknesses, in mm, of a stiffener (except for U-type stiffeners) web is to not be taken as less than 4 mm.

(ix) Single-side welding is not permitted for secondary stiffeners, except for U-type stiffeners.

(x) The requirements in 18.2.5(c) of this Chapter do not to be applied to stiffeners of the lower plating of double skin hatch covers in cases where the lower plating is not considered to be a strength member.

(d) Primary supporting members of steel hatch covers and hatch beams

(i) Scantlings of the primary supporting members of steel hatch covers and hatch beams are to be determined according to 18.2.5(e) below taking into consideration the permissible stresses specified in 18.2.5(a)(i) above.

(ii) Scantlings of the primary supporting members of steel hatch covers and hatch beam with variable cross-sections are to be not less than that obtained from the following formulae. For steel hatchway covers, S and *l* are to be read as b and S, respectively.

The net section modulus, in cm^3, of hatch beams or primary supporting members at the mid-point

$$Z_{net} = Z_{net\_CS}$$
$$Z_{net} = k_1 Z_{net\_CS}$$

The net moment of inertia, in cm^4, of hatch beams or primary supporting members at the mid-point

$$I_{net} = I_{net\_CS}$$
$$I_{net} = k_2 I_{net\_CS}$$

where:

Z_{net_cs} = Net section modulus, in cm^3, complying with requirement (i) above

I_{net_cs} = Net moment of inertia, in cm^4, complying with requirement (i) above

S = Spacing, in m, of portable beams or primary supporting members

l = Unsupported span, in m, of portable beams or primary supporting members

b = Width, in m, of steel hatch covers

k_1 , k_2 = Coefficients obtained from the formulae given in Table XV 18-4

(iii) In addition to (i) and (ii) above, the scantlings of the primary supporting members of steel hatch covers are to be in compliance with the requirements specified in 18.2.5(f) below.

(iv) When biaxial compressed flange plates are considered, the effective width of flange plates is to be in compliance with 18.2.5(f)(iii) below.

(v) In addition to (i) to (iv) above, net thickness t_{net} , in mm, of the webs of primary supporting members is not to be less than that obtained from the following formulae, whichever is greater:

$$t_{net} = 6.5S$$
$$t_{net} = 5$$

where:

S = Stiffener spacing, in m

(vi) In addition to (i) to (v) above, the net thickness t_{net} , in mm, of edge girders exposed to sea wash is not to be less than that obtained from the following formulae, whichever is greater:

$$t_{net} = 15.8S\sqrt{\frac{P_H}{0.95\sigma_F}}$$
$$t_{net} = 8.5S$$

where:

P_H = Design horizontal wave load in kN/m^2, as specified in 18.2.4(b) of this Chapter

S = Stiffener spacing, in m

σ_F = Minimum upper yield stress or proof stress of the material, in N/mm^2

(vii) The moment of inertia, in cm^4, of the edge elements of hatch covers is not to be less than that obtained from the following formula:

$I = 6pa^4$

where:

a = Maximum of the distance a_i, in m, between two consecutive securing devices, measured along the hatch cover periphery, not to be taken as less than $2.5a_C$, in m (see Fig. XV 18-3 of this Chapter)

a_C = $\max(a_{1.1}, a_{1.2})$, in m (see Fig. XV 18-3 of this Chapter)

p = Packing line pressure, in N/mm, minimum 5.0 N/mm

When calculating the actual gross moment of inertia of edge elements, the effective breadth of the attached plating of hatch covers is to be taken as equal to the lesser of 0.165a. Half the distance between the edge element and the adjacent primary member.

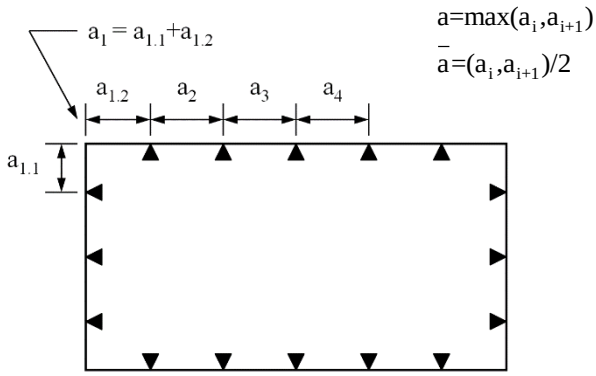

Fig. XV 18-3
Distance between Securing Devices, Measured Along Hatch Cover Periphery

(e) Strength calculation

(i) Strength calculation for steel hatch covers may be carried out by either using beam theory, grillage analysis or FEM. Net scantlings are to be used for modeling. Strength calculations for double skin hatch covers or hatch covers with box girders are to be assessed using FEM, as specified in 18.2.5(e)(iii) below.

(ii) Effective cross-sectional properties for calculation by grillage analysis are to be determined by the following (1) to (5):

(1) The effective breadth of the attached plating e_m of the primary supporting members specified in Table XV 18-5 according to the ratio of *l* and e is to be considered for the calculation of effective cross-sectional properties. For intermediate values of *l*/e, e_m is to be obtained by linear interpolation.

(2) Separate calculations may be required for determining the effective breadth of one-sided or non-symmetrical flanges.

(3) The effective cross sectional areas of plates is not to be less than the cross sectional area of the face plate.

(4) The cross sectional area of secondary stiffeners parallel to the primary supporting member under consideration within the effective breadth may be included in the calculations (see Fig. XV 18-5 of this Chapter).

(5) For flange plates under compression with secondary stiffeners perpendicular to the web of the primary supporting member, the effective width is to be determined according to 18.2.5(f)(iii) below.

(iii) General requirements for FEM are as follows:

(1) The structural model is to be able to reproduce the behavior of the structure with the highest possible fidelity. Stiffeners and primary supporting members subject to pressure loads are to be

included in the modelling. However, buckling stiffeners may be disregarded for stress calculation.

(2) Net scantlings which exclude corrosion additions are to be used for modeling.

(3) Element size is to be suitable to take effective breadth into account.

(4) In no case is element width to be larger than stiffener spacing. The ratio of element length to width is not to exceed 4.0.

(5) The element height of the webs of primary supporting members is not to exceed one-third of the web height.

(6) Stiffeners may be modelled using shell elements, plane stress elements or beam elements.

(f) Buckling strength of steel hatch covers

The buckling strength of the structural members of steel hatch covers is to be in accordance with the following (i) to (iii):

(i) The buckling strength of a single plate panel of the top and lower steel hatch cover plating is to be in compliance with the following formulae:

$$\left(\frac{|\sigma_x|\, C_{sf}}{\kappa_x\, \sigma_F}\right)^{e_1} + \left(\frac{|\sigma_y|\, C_{sf}}{\kappa_y\, \sigma_F}\right)^{e_2} - B\left(\frac{\sigma_x\, \sigma_y\, C_{sf}^2}{\sigma_F^2}\right)^{e_2} + \left(\frac{|\tau|\, C_{sf}\, \sqrt{3}}{\kappa_\tau\, \sigma_F}\right)^{e_3} \leq 1.0$$

$$\left(\frac{\sigma_x\, C_{sf}}{\kappa_x\, \sigma_F}\right)^{e_1} \leq 1.0$$

$$\left(\frac{\sigma_y\, C_{sf}}{\kappa_y\, \sigma_F}\right)^{e_2} \leq 1.0$$

$$\left(\frac{|\tau|\, C_{sf}\, \sqrt{3}}{\kappa_\tau\, \sigma_F}\right)^{e_3} \leq 1.0$$

where:

σ_x, σ_y = Membrane stress in the x-direction and the y-direction, in N/mm^2. In cases where the stresses are obtained from FEM and already contain the Poisson-effect, the following modified stress values may be used. Both stresses σ_x and σ_y are to be compressive stress in order to apply stress reduction according to the following formulae:

$$\sigma_x = \frac{\sigma_x^* - 0.3\sigma_y^*}{0.91}$$

$$\sigma_y = \frac{\sigma_y^* - 0.3\sigma_x^*}{0.91}$$

where:

σ_x^*, σ_y^* = Stresses containing the Poisson-effect. These values are to be in compliance with the following formulae:

$\sigma_y = 0$ and $\sigma_x = \sigma_x^*$ for $\sigma_y^* < 0.3\, \sigma_x^*$

$\sigma_x = 0$ and $\sigma_y = \sigma_y^*$ for $\sigma_x^* < 0.3\, \sigma_y^*$

where:

τ = Shear stress in x-y plane, in N/mm^2

σ_F = Minimum yield stress of the material, in N/mm^2

Compressive and shear stresses are to be taken as positive values and tension stresses are to be taken as negative values.

C_{sf} = Safety factor taken as equal to:

= 1.25 for hatch covers when subjected to design vertical wave loads according to 18.2.4(a) of this Chapter

= 1.10 for hatch covers when subjected to loads according to 18.2.4(c) to (e) of this Chapter

F_1 = Correction factor for the boundary condition of stiffeners on the longer side of elementary plate panels according to Table XV 18-6 of this Chapter

e_1, e_2, e_3 and B = Coefficient obtained from Table XV 18-7 of this Chapter

κ_x, κ_y and κ_τ = Reduction factor obtained from Table XV 18-8 of this Chapter. However, these values are to be in compliance with the following formulae:

$\kappa_x = 1.0$ for $\sigma_x \leq 0$ (tensile stress)

$\kappa_y = 1.0$ for $\sigma_y \leq 0$ (tensile stress)

a = Length, in mm, of the longer side of the partial plate field (x-direction)

b = Length, in mm, of the shorter side of the partial plate field (y-direction)

n = Number of the elementary plate panel breadths within the partial or total plate panel (see Fig. XV 18-4 of this Chapter)

α = Aspect ratio of a single plate field obtained from the following formula:

$$\alpha = \frac{a}{b}$$

λ = Reference degree of slenderness, taken as equal to:

$$\lambda = \sqrt{\frac{\sigma_F}{K\sigma_e}}$$

K = Buckling factor according to Table XV 18-8 of this Chapter

σ_e = Reference stress, in N/mm^2, taken as equal to:

$$\sigma_e = 0.9E\left(\frac{t}{b}\right)^2$$

E = Modulus of elasticity, in N/mm^2 of the material, taken as equal to:

= 2.06×10^5

t = Net thickness, in mm, of plate under consideration

Ψ = Edge stress ratio taken as equal to:

$$\Psi = \frac{\sigma_2}{\sigma_1}$$

σ_1 = Maximum compressive stress, in N/mm^2

σ_2 = Minimum compressive stress or tension stress, in N/mm^2

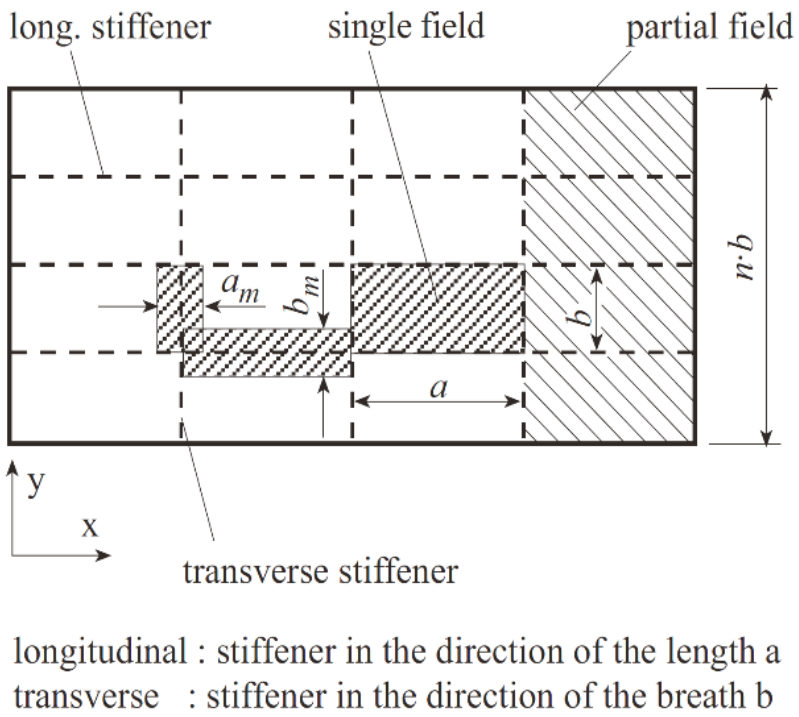

Fig. XV 18-4
General Arrangement of Panels

(ii) The buckling strength of non-stiffened webs and the flanges of primary supporting members are to be according to the requirement of (i) above.

(iii) The buckling strength of partial and total fields included in the structural members of steel hatch covers is to be in compliance with the following (1) to (5):

(1) The buckling strength of longitudinal and transverse secondary stiffeners is to be in compliance with following (4) and (5). For U-type stiffeners, however, the requirements in (5) below may be omitted.

(2) When buckling calculation is carried out according to (4) and (5) below, the effective breadth of steel hatch cover plating may be in accordance with following a) and b):

a) The effective breadth a_m or b_m of attached plating may be determined by the following formulae (see Fig. XV 18-4 of this Chapter). However, the effective breadth of plating is not to be taken greater than the value obtained from 18.2.5(e) above.

$b_m = \kappa_x b$ for longitudinal stiffeners
$a_m = \kappa_y a$ for transverse stiffeners

where:
κ_x, κ_y = As obtained from Table XV 18-8 of this Chapter
a , b = As specified (i) above

b) The effective breadth e'_m of the stiffened flange plates of primary supporting members may be determined according to the following i) and ii). However, a_m and b_m for flange plates are in general to determined for $\psi = 1$.

i) Stiffening parallel to the webs of primary supporting members (see Fig. XV 18-5 of this Chapter).

For $b \geq e_m$, b and a have to be exchanged.

$b < e_m$

$e'_m = nb_m$

where:

n = Integer number of stiffener spacing b inside the effective breadth e_m according to 18.2.5(e) above, taken as equal to:

$$n = \text{int}\left(\frac{e_m}{b}\right)$$

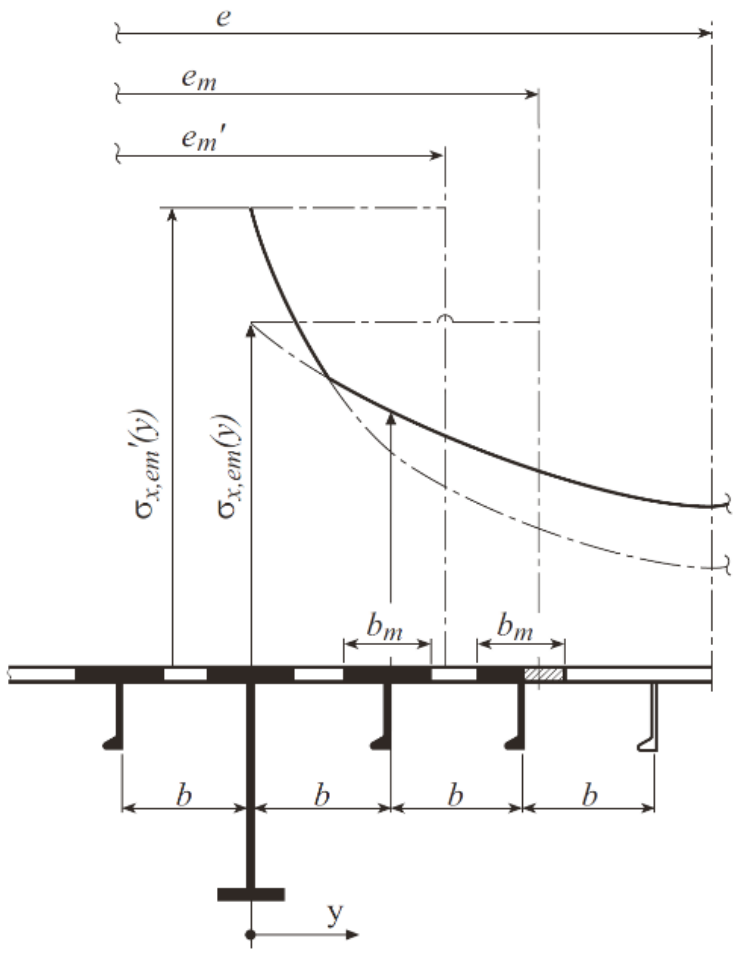

Fig. XV 18-5
Stiffening Parallel to Web of Primary Supporting Member

ii) Stiffening perpendicular to the webs of primary supporting members (see Fig. XV 18-6 of this Chapter). For a < e_m , a and b have to be exchanged.

$a \geq e$

$e'_m = na_m < e_m$

$n = 2.7\frac{e_m}{a} \leq 1$

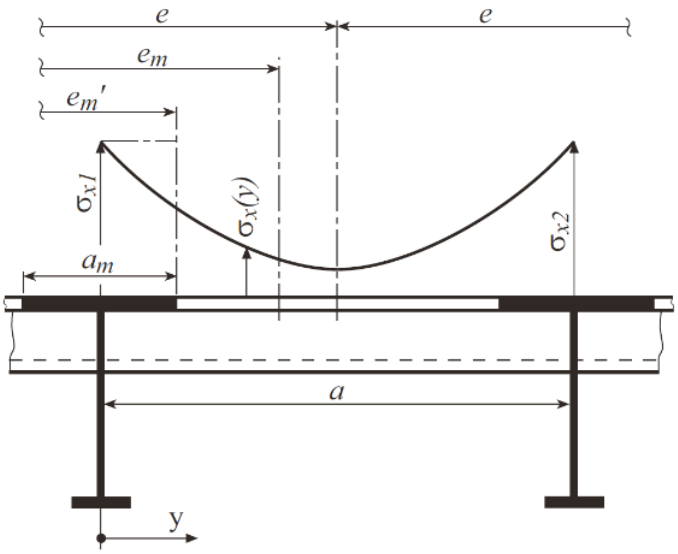

Fig. XV 18-6
Stiffening Perpendicular to Web of Primary Supporting Member

(3) Stresses obtained from the calculation of the scantlings of plating and the stiffeners of steel hatch covers are to be in compliance with the following:

a) The scantlings of plates and stiffeners are in general to be determined according to the maximum stresses $\sigma_x(y)$ at the webs of primary supporting members and stiffeners respectively.

b) For stiffeners with spacing b under compression arranged parallel to primary supporting members, no value less than $0.25\sigma_F$ is to be inserted for $\sigma_x(y = b)$.

c) The stress distribution between two primary supporting members may be obtained by the following formula:

$$\sigma_x(y) = \sigma_{x1}\left\{1 - \frac{y}{e}\left[3 + c_1 - 4c_2 - 2\frac{y}{e}(1 + c_1 - 2c_2)\right]\right\}$$

where:

c_1 = As given by the following formula:

$$c_1 = \frac{\sigma_{x1}}{\sigma_{x2}}, \text{however } 0 \le c_1 \le 1$$

c_2 = As given by the following formula:

$$c_2 = \frac{1.5}{e}(e''_{m1} + e''_{m2}) - 0.5$$

σ_{x1}, σ_{x2} = Normal stresses in the flange plates of adjacent primary supporting members 1 and 2 with spacing e, based on cross-sectional properties considering the effective breadth or effective width, as appropriate

e''_{m1} = Proportionate effective breadth e_{m1} or proportionate effective width e'_{m1} of primary supporting member 1 within the distance e, as appropriate

e''_{m2} = Proportionate effective breadth e_{m2} or proportionate effective width e'_{m2} of primary supporting member 2 within the distance e, as appropriate

d) The shear stress distribution in flange plates may be assumed to be linear.

(4) For lateral buckling, longitudinal and transverse stiffeners are to be in compliance with following a) to c):

a) Secondary stiffeners subject to lateral loads are to be in compliance with the following criteria:

$$\frac{\sigma_a + \sigma_b}{\sigma_F} C_{sf} \le 1$$

where:

σ_a = Uniformly distributed compressive stress, in N/mm^2, in the direction of the stiffener axis, given by the following formula:

$\sigma_a = \sigma_x$ for longitudinal stiffeners

$\sigma_a = \sigma_y$ for transverse stiffeners

σ_b = Bending stress, in N/mm^2, in the stiffeners, given by the following formula:

$$\sigma_b = \frac{M_0 + M_1}{Z_{st} 10^3}$$

M_0 = Bending moment, in N-mm, due to deformation w of stiffener, given by the following formula:

$$M_0 = F_{Ki} \frac{p_z w}{c_f - p_z} \quad \text{with } (c_f - p_z) > 0$$

M_1 = Bending moment, in N-mm, due to lateral load P given by the following formula:

$$M_1 = \frac{Pba^2}{24 \cdot 10^3} \quad \text{for longitudinal stiffeners}$$

$$M_1 = \frac{P(nb)^2}{8c_s 10^3} \quad \text{for transverse stiffeners}$$

Where n is to be taken as equal to 1 for ordinary transverse stiffeners

Z_{st} = Section modulus of stiffener, in cm^3, including the effective breadth of plating according to 18.2.5(f)(iii) of this Chapter

c_S = Factor accounting for the boundary conditions of the transverse stiffener taken as equal to:

= 1.0 for a stiffener that is simply supported stiffener

= 2.0 for a stiffener that is partially constrained

P = Lateral load, in kN/m^2, as specified in 18.2.4 of this Chapter according to the condition under consideration

F_{Ki} = Ideal buckling force, in N, of the stiffener given by the following formula:

= $F_{Kix} = \frac{\pi^2}{a^2} EI_x 10^4$ for longitudinal stiffeners

= $F_{Kiy} = \frac{\pi^2}{(nb)^2} EI_y 10^4$ for transverse stiffeners

I_x, I_y = Net moments of inertia, in cm^4, of the longitudinal or transverse stiffener, including the effective breadth of attached plating according to 18.2.5(f)(iii) of this Chapter. I_x and I_y, are to be in compliance with the following criteria:

$$I_x \geq \frac{bt^3}{12 \times 10^4}$$

$$I_y \geq \frac{at^3}{12 \times 10^4}$$

p_z = Nominal lateral load, in N/mm^2, of the stiffener due to σ_x, σ_y and τ

$$p_{zx} = \frac{t_a}{b}\left[\sigma_{x1}\left(\frac{\pi b}{a}\right)^2 + 2c_y\sigma_y + \tau_1\sqrt{2}\right] \quad \text{for longitudinal stiffeners}$$

$$p_{zy} = \frac{t_a}{b}\left[2c_x\sigma_{x1} + \sigma_y\left(\frac{\pi a}{nb}\right)^2\left(1 + \frac{A_y}{at_a}\right) + \tau_1\sqrt{2}\right] \quad \text{for transverse stiffeners}$$

t_a = Net thickness, in mm, of attached plate

c_x , c_y = Factor taking into account the stresses vertical to the stiffener's axis and distributed variable along the stiffener's length taken as equal to:

= $0.5(1+\Psi)$ for $0 \le \Psi \le 1$

= $\dfrac{0.5}{1-\Psi}$ for $\Psi < 0$

A_x , A_y = Net sectional area, in mm^2, of the longitudinal or transverse stiffener respectively without attached plating

$$\sigma_{x1} = \sigma_x\left(1+\frac{A_x}{bt_a}\right)$$

$$\tau_1 = \left[\tau - t\sqrt{\sigma_F E\left(\frac{m_1}{a^2}+\frac{m_2}{b_2}\right)}\right] \ge 0$$

m_1, m_2 = Coefficient given by the following formulae:

For longitudinal stiffeners:

$m_1 = 1.47$ $m_2 = 0.49$ for $a/b \ge 2.0$

$m_1 = 1.96$ $m_2 = 0.37$ for $a/b < 2.0$

For transverse stiffeners:

$m_1 = 0.37$ and $m_2 = \dfrac{1.96}{n^2}$ for $\dfrac{a}{nb} \ge 0.5$

$m_1 = 0.49$ and $m_2 = \dfrac{1.47}{n^2}$ for $\dfrac{a}{nb} < 0.5$

w = $w_0 + w_1$

w_0 = Assumed imperfection, in mm, taken as equal to:

$$w_0 = \min\left(\frac{a}{250}, \frac{b}{250}, 10\right) \quad \text{for longitudinal stiffeners}$$

$$w_0 = \min\left(\frac{a}{250}, \frac{nb}{250}, 10\right) \quad \text{for transverse stiffeners}$$

For stiffeners sniped at both ends w_0 is not to be taken as less than the distance from the mid-point of attached plating to the neutral axis of the stiffener calculated with the effective width of its attached plating

w_1 = Deformation of stiffener, in mm, at the mid-point of stiffener span due to lateral load P. In the case of uniformly distributed loads, the following values for w_1 may be used:

$$w_1 = \frac{Pba^4}{384 \times 10^7 EI_x} \quad \text{for longitudinal stiffeners}$$

$$w_1 = \frac{5Pa(nb)^4}{384 \times 10^7 EI_y c_s^2} \quad \text{for transverse stiffeners}$$

c_f = Elastic support, in N/mm^2, provided by the stiffener taken as equal to:

For longitudinal stiffeners:

$$c_f = F_{Kix}\frac{\pi^2}{a^2}(1+c_{px})$$

$$c_{px} = \frac{1}{1+\dfrac{0.91\left(\dfrac{12\times 10^4 I_x}{t^3 b}-1\right)}{c_{xa}}}$$

c_{xa} = Coefficient taken as equal to:

$$c_{xa} = \left(\frac{a}{2b} + \frac{2b}{a}\right)^2 \quad \text{for } a \geq 2b$$

$$c_{xa} = \left[1 + \left(\frac{a}{2b}\right)^2\right]^2 \quad \text{for } a < 2b$$

For transverse stiffeners:

$$c_f = c_s F_{Kiy} \frac{\pi^2}{(n \cdot b)^2}(1 + c_{py})$$

$$c_{py} = \frac{1}{1 + \frac{0.91\left(\frac{12 \times 10^4 I_y}{t^3 b} - 1\right)}{c_{ya}}}$$

c_{ya} = Coefficient taken as equal to:

$$c_{ya} = \left(\frac{nb}{2a} + \frac{2a}{nb}\right)^2 \quad \text{for } nb \geq 2a$$

$$c_{ya} = \left[1 + \left(\frac{nb}{2a}\right)^2\right]^2 \quad \text{for } nb < 2a$$

b) For stiffeners not subject to lateral loads, the bending moment σ_b is to be calculated at the mid-point of the stiffener.

c) When lateral loads are acting, stress calculations are to be carried out for both fibers of the stiffener's cross sectional area (if necessary for the biaxial stress field at the plating side).

(5) For torsional buckling, longitudinal and transverse stiffeners are to be in compliance with the following a) and b):

a) Longitudinal stiffeners are to be in compliance with the following criteria:

$$\frac{\sigma_x}{\kappa_T \sigma_F} C_{sf} \leq 1.0$$

where:

κ_T = Coefficient taken as equal to:

$$\kappa_T = 1.0 \quad \text{for } \lambda_T \leq 0.2$$

$$\kappa_T = \frac{1}{\Phi + \sqrt{\Phi^2 - \lambda_T^2}} \quad \text{for } \lambda > 0.2$$

$$\Phi = 0.5[1 + 0.21(\lambda_T - 0.2) + \lambda_T^2]$$

λ_T = Reference degree of slenderness taken as equal to:

$$\lambda_T = \sqrt{\frac{\sigma_F}{\sigma_{KiT}}}$$

$$\sigma_{KiT} = \frac{E}{I_p}\left(\frac{\pi^2 I_\omega 10^2}{a^2}\varepsilon + 0.385 I_T\right) \quad \text{N/mm}^2$$

I_P = Net polar moment of inertia of the stiffener, in cm^4, defined in Table XV 18-9 of this Chapter, and related to point C as shown in Fig. XV 18-7

I_T = Net St. Venant's moment of inertia of the stiffener, in cm^4, defined in Table XV 18-9 of this Chapter

I_ω = Net sectorial moment of inertia of the stiffener, in cm^6, defined in Table XV 18-9 of this Chapter, related to point C as shown in Fig. XV 18-7 of this Chapter

ε = Degree of fixation taken as equal to:

$$\varepsilon = 1 + 10^{-3}\sqrt{\frac{a^4}{\frac{3}{4}\pi^4 I_w\left(\frac{b}{t^3} + \frac{4h_w}{3t_w^3}\right)}}$$

A_w = Net web area, in mm^2, equal to:

$A_w = h_w t_w$

A_f = Net flange area, in mm^2, equal to:

$A_f = b_f t_f$

$$e_f = h_w + \frac{t_f}{2} \quad \text{mm}$$

h_w, t_w, b_f, t_f = Dimensions of stiffener, in mm, as specified in Fig. XV 18-7 of this Chapter

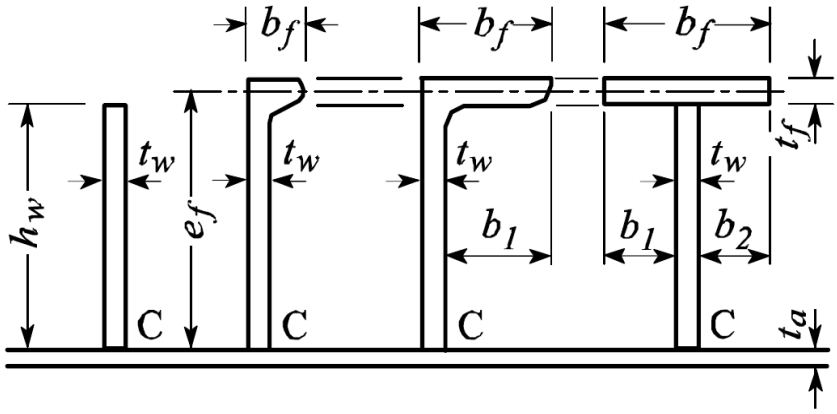

Fig. XV 18-7
Dimensions of Stiffener

b) For transverse secondary stiffeners loaded by compressive stress which are not supported by longitudinal stiffeners, sufficient torsional buckling strength is to be performed analogously in accordance with a) above.

18.2.6 Additional requirements for steel hatch covers carrying cargoes

(a) Where concentrated loads, e.g. container loads, are acting on steel hatch covers, direct calculations deemed appropriate by the Society are required.

(b) The scantlings of sub structures subject to concentrated loads acting on steel hatch covers are to be determined taking into consideration the design cargo loads and permissible stresses specified in this section.

(c) The scantlings of top plates and stiffeners of steel hatch covers subject to wheel loads are determined by direct calculation or any other method which deemed appropriate by the Society.

18.2.7 Portable beams, hatchway covers, steel pontoon covers and steel weathertight covers

(a) Portable beams are to be in compliance with the following (i) to (vii):

(i) The carriers and sockets for portable beams are to be of substantial construction, having a minimum bearing surface of 75 mm, and are to be provided with means for the efficient fitting and securing of the beams.

(ii) Coamings are to be stiffened in way of carriers and sockets by providing stiffeners from these fittings to the deck or by equivalent strengthening.

(iii) Where beams of a sliding type are used, the arrangement is to ensure that the beams remain properly in position when the hatchway is closed.

(iv) The depth of portable beams and the width of their face plates are to be suitable to ensure the lateral stability of the beams. The depth of beams at their ends is not to be less than 0.40 times the depth at their mid-point or 150 mm, whichever is greater.

(v) The upper face plates of portable beams are to extend to the ends of the beams. The web plates are to be increased in thickness to at least twice that at the mid-point for at least 180 mm from each end or to be reinforced with doubling plates.

(vi) Portable beams are to be provided with suitable gear for releasing them from slings without the need for personnel to get on the beam.

(vii) Portable beams are to be clearly marked to indicate the deck, hatchway and position to which they belong.

(b) Hatchway covers are to be in compliance with the following (i) to (v):

(i) Hatch rests are to be provided with at least a 65 mm bearing surface and are to be beveled, if required, to suit the slope of the hatchways.

(ii) Hatchway covers are to be provided with suitable hand grips according to their weight and size, except where such grips are unnecessary due to the cover's construction.

(iii) Hatchway covers are to be clearly marked to indicate the deck, hatchway and position to which they belong.

(iv) The wood for hatchway covers is to be of good quality, straight grained and reasonably free from knots, sap and shakes.

(v) The ends of all wood covers are to be protected by an encircling steel band.

(c) Steel pontoon covers are to be in compliance with the following (i) to (iii):

(i) The depth of steel pontoon covers at the supports is not to be less than 1/3 the depth at the mid-point or 150 mm, whichever is greater.

(ii) The width of the bearing surfaces for steel pontoon covers is not to be less than 75 mm.

(iii) Steel pontoon covers are to be clearly marked to indicate the deck, hatchway and position to which they belong.

(d) Steel weathertight covers are to be in compliance with the following:

The depth of steel weathertight covers at the supports is not to be less than 1/3 the depth at the mid-point or 150 mm, whichever is greater.

18.2.8 Tarpaulins and securing arrangements for hatchways closed by portable covers

(a) At least two layers of tarpaulins are to be provided for each exposed hatchway on the freeboard or superstructure decks and at least one layer of such a tarpaulin is to be provided for each exposed hatchway elsewhere.

(b) Battens are to be efficient for securing the tarpaulins and not to be less than 65 mm in width and 9 mm in thickness.

(c) Wedges are to be of tough wood or other equivalent materials. They are to have a taper not more than 1/6 and not to be less than 13 mm in thickness at the point.

(d) Cleats are to be set to fit the taper of the wedges. They are to be at least 65 mm wide and to be spaced not more than 600 mm from centre to centre; the cleats along each side are to be arranged not more than 150 mm apart from the hatch corners.

(e) For all hatchways in exposed freeboard and superstructure decks, steel bars or other equivalent means are to be provided in order to efficiently secure each section of the hatchway cover after the tarpaulins are battened down. Hatchway covers of more than 1.5 meters in length are to be secured by at least two such securing appliances. At all other hatchways in exposed positions on weather decks, ring bolts or other suitable fittings for lashing are to be provided.

18.2.9 Hatch coaming strength criteria

(a) Height of coamings is to be in compliance with following (i) to (iii):

(i) Height of coamings above the upper surface of the deck is to be at least 600 mm in Position 1 and 450 mm in Position 2.

(ii) For hatchways closed by weathertight steel hatch covers, the height of coamings may be reduced from that prescribed in (i) or omitted entirely subject to the satisfaction of the Society.

(iii) The height of hatchway coamings other than those provided in exposed portions of the freeboard or superstructure decks is to be to the satisfaction of the Society having regard to the position of hatchways or the degree of protection provided.

(b) Scantlings of hatch coamings are to be in accordance with the followings.

(i) The local net plate thickness, in mm, of the hatch coaming plating $t_{coam,net}$, is not to be less than that obtained from following formula:

$$t_{coam,net} = 14.2S\sqrt{\frac{P_H}{\sigma_{a,coam}}}\text{, but not to be less than } 6 + \frac{L}{100}$$

where:

S = Secondary stiffener spacing, in m

P_H = As specified in 18.2.4(b) of this Chapter

$\sigma_{a,\,coam}$ = $0.95\sigma_F$

σ_F = Minimum upper yield stress or proof stress of the material, in N/mm^2.

L = Length of ship as specified in 1.5.1 of this Part

(ii) Where the hatch coaming secondary stiffener is snipped at both ends, the gross thickness $t_{coam,gross}$, in mm, of the coaming plate at the sniped stiffener end is not to be less than that obtained from the following formula:

$$t_{coam,gross} = 19.6\sqrt{\frac{P_H S(l - 0.5S)}{\sigma_F}}$$

where:

l = secondary stiffener span, in m, to be taken as the spacing of coaming stays

S, P_H and σ_F = As specified in (i) above

(iii) The net section modulus Z_{net}, in cm^3, and net shear area, in cm^2, of hatch coaming secondary stiffeners are not to be less than that obtained from the following formula. For snipped stiffeners at coaming corners, section modulus and shear area at the fixed support are to be increased by 35%.

$$Z_{net} = \frac{83Sl^2P_H}{\sigma_F}$$

$$A_{net} = \frac{10SlP_H}{\sigma_F}$$

where:

S, l, P_H and σ_F = As specified in (ii) above

(iv) Buckling strength assessment of hatch coaming is to be carried out by the method as deemed appropriate by the Society.

(v) The net scantlings of hatch coaming stays are to be in accordance with following (1) to (4):

(1) For hatch coaming stays considered to be simple beams (see Examples 1 and 2 of Fig. XV 18-8), the net section modulus Z_{net}, in cm^3, of such stays at their deck connections is not to be less than that obtained from the following formula:

$$Z_{net} = \frac{526 H_c^2 S P_H}{\sigma_F}$$

where:

H_c = Hatch coaming stay height, in m

S = Hatch coaming stay spacing, in m

σ_F and P_H = As specified in (i) above

(2) For coaming stays other than those in (1) above (see Example 3 of Fig. XV18-8), the stresses are generally to be determined through grillage analysis or FEM, and the calculated stresses are to satisfy the permissible stress criteria of 18.2.5(a) of this Chapter.

(3) For calculating the net section modulus of coaming stays, the area of their face plates is to be taken into account only when it is welded with full penetration welds to the deck plating and an adequate underdeck structure is fitted to support the stresses transmitted by them.

(4) The net scantling $t_{w,net}$, in mm, of hatch coaming stay webs is not to be less than that obtained from the following formula:

$$t_{w,net} = \frac{2 H_c S P_H}{\sigma_F h}$$

where:

h = Hatch coaming stay depth, in m

H_c ,S, P_H and σ_F = As specified in (1) above

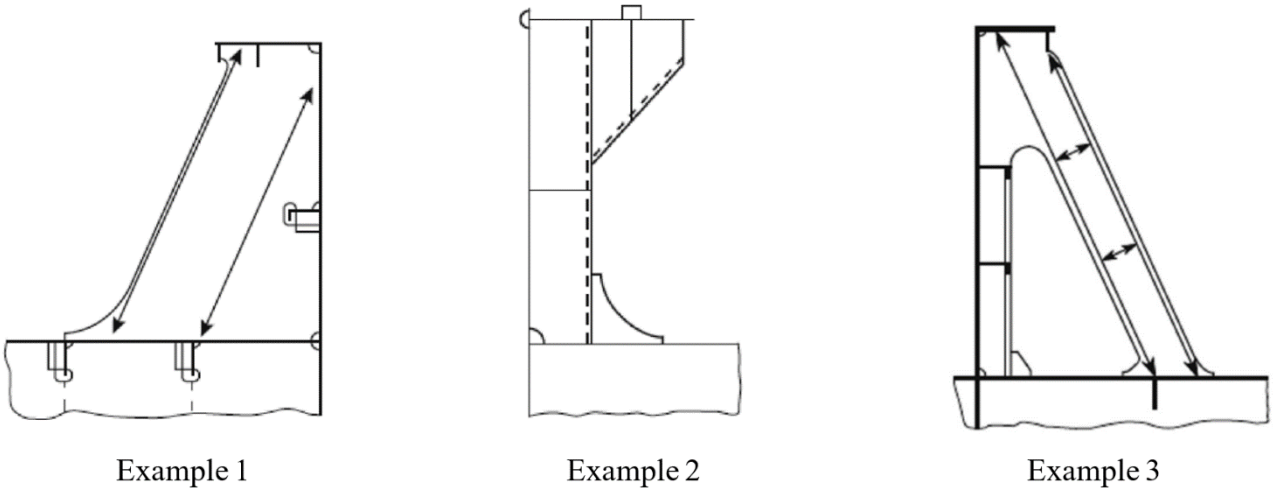

Fig. XV 18-8
Example for the Coaming Stays

(c) The coamings for hatchways in Position 1 or coamings of 760 mm or more in height for hatchways in Position 2 are to be stiffened in a suitable position below the upper edge by a horizontal stiffener; the breadth of the horizontal stiffener is not to be less than 180 mm.

(d) Coamings are to be additionally supported by efficient brackets or stays provided from the horizontal stiffeners specified in (c) to the deck at intervals of approximately 3 meters.

(e) Coaming plates are to extend to the lower edge of the deck beams or hatch side girders are to be fitted that extend to the lower edge of the deck beams (see Fig. XV 18-9 of this Chapter). Extended coaming plates and hatch side girders are to be flanged or fitted with face bars or half-round bars, except where specially approved by the Society.

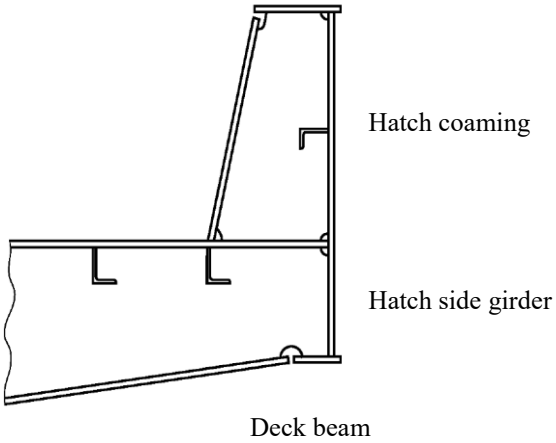

Fig. XV 18-9
Example for the Extension of Coaming Plates

(f) Hatch coamings and hatch coaming stays are to be in compliance with the following requirements:

(i) The local details of the structures are to be designed so as to transfer pressures on the hatch covers to the hatch coamings and, through them, to the deck structures below. Hatch coamings and supporting structures are to be adequately stiffened to accommodate the loading from hatch covers, in longitudinal, transverse and vertical directions.

(ii) Underdeck structures are to be checked against the load transmitted by the stays.

(iii) Double continuous welding is to be adopted for the connections of stay webs with deck plating and the weld throat is to be not less than 0.44 $t_{w,gross}$, where $t_{w,gross}$ is the gross thickness of the stay web.

(iv) The toes of stay webs are to be connected to deck plating with deep penetration double bevel welds extending over a distance not less than 15% of the stay width.

(v) On ships carrying cargoes such as timber, coal or coke on deck, stays are to be spaced not more than 1.5 m apart.

(vi) Hatch coaming stays are to be supported by appropriate substructures.

(vii) For hatch coamings that transfer friction forces at hatch cover supports, special consideration is to be given to fatigue strength.

(viii) Longitudinal hatch coamings with a length exceeding 0.1L are to be provided with tapered brackets or equivalent transitions and a corresponding substructure at both ends. At the end of the brackets, they are to be connected to the deck by full penetration welds of minimum 300 mm in length.

(ix) Hatch coamings and horizontal stiffeners on hatch coamings may be considered as a part of the longitudinal hull structure when designed according to the requirements for longitudinal strength and verified in cases deemed appropriate by the Society.

(x) Unless otherwise specified, the material and welding requirements for hatch coamings are to be in compliance with the provisions of Part XI and XII.

18.2.10 Closing arrangements

(a) Securing devices

(i) Securing devices between covers and coamings and at cross-joints are to ensure weathertightness.

(ii) The means for securing and maintaining weathertightness by using gaskets and securing devices are to be in compliance with the following (1) to (6). The means for securing and maintaining weathertightness of weathertight covers are to be to the satisfaction of the Society. Arrangements are to ensure that weathertightness can be maintained in any sea condition.

(1) The weight of covers and any cargo stowed thereon are to be transmitted to the ship structure through steel to steel contact.

(2) Gaskets and compression flat bars or angles which are arranged between covers and the ship structure and cross-joint elements are to be in compliance with the following a) to c):

a) Compression bars or angles are to be well rounded where in contact with the gaskets and are to be made of corrosion-resistant materials.

b) The gaskets are to be of relatively soft elastic materials. The material is to be of a quality suitable for all environmental conditions likely to be experienced by the ship, and is to be compatible with the cargoes carried.

c) A continuous gasket is to be effectively secured to the cover. The material and form of gasket selected are to be considered in conjunction with the type of cover, the securing arrangement and the expected relative movement between the cover and ship structure.

(3) Securing devices attached to hatchway coamings, decks or covers are to be in compliance with the following a) to e):

a) Arrangement and spacing of securing devices are to be determined with due attention to the effectiveness for weathertightness, depending upon the type and the size of hatch cover as well as to the stiffness of the cover edges between the securing devices.

b) The gross sectional area, in cm^2, of each securing device is not to be less than that obtained from the following formula. However, rods or bolts are to have a net diameter not less than 19 mm for hatchways exceeding 5 m^2 in area.

$$A = 0.28\bar{a}p/f$$

where:

$\bar{a}$	=	Half the distance, in m, between two adjacent securing devices, measured along the hatch cover periphery (see Fig. XV 18-3 of this Chapter)
p	=	Packing line pressure, in N/mm, minimum 5 N/mm
f	=	As obtained from the following formula:
		$f = (\sigma_F/235)^e$
σ_F	=	Minimum upper yield stress, in N/mm^2, of the steel used for fabrication, but not to be taken greater than 70% of the ultimate tensile strength
e	=	Coefficient taken as equal to:
	=	1.0 for $\sigma_F \leq 235$ N/mm^2
	=	0.75 for $\sigma_F > 235$ N/mm^2

c) Individual securing devices on each cover are to have approximately the same stiffness characteristics.

d) Where rod cleats are fitted, resilient washers or cushions are to be incorporated.

e) Where hydraulic cleating is adopted, a positive means is to be provided to ensure that it remains mechanically locked in the closed position in the event of failure of the hydraulic system.

(4) A drainage arrangement equivalent to the standards specified in the following is to be provided.

a) Drainage is to be arranged inside the line of gaskets by means of a gutter bar or vertical extension of the hatch side and end coaming. If an application is made by the owner of a container carrier and the Society deems it to be appropriate, special consideration will be given to this requirement.

b) Drain openings are to be arranged at the ends of drain channels and are to be provided with effective means such as non-return valves or the equivalent for preventing the ingress of water from outside.

c) Cross-joints of multi-panel covers are to be arranged with a drainage channel for water from space above the gasket and a drainage channel below the gasket.

d) If a continuous outer steel contact between cover and ship structure is arranged, drainage from the space between the steel contact and the gasket is also to be provided for.

(5) It is recommended that ships with steel weathertight covers are supplied with an operation and maintenance manual which includes the following a) to e):

a) Opening and closing instructions

b) Maintenance requirements for packing, securing devices and operating items

c) Cleaning instructions for drainage systems

d) Corrosion prevention instructions

e) List of spare parts

(6) Securing devices of special design in which significant bending or shear stresses occur may be designed as anti-lifting devices according to (b) below.

(b) The securing devices of hatch covers, on which cargo is to be lashed, are to be designed for a lifting force resulting from the loads according to 18.2.4(d) (see Fig. XV 18-10 of this Chapter). Unsymmetrical loading, which may occur in practice, is to be considered. Under such loading, the equivalent stress, in N/mm^2, in securing devices is not to be greater than that obtained from the following formula. Anti-lifting devices may be dispensed with at the discretion of the Society.

$$\sigma_E = \frac{150}{k_l}$$

where:

k_l = As obtained from the following formula:

$$k_l = \left(\frac{235}{\sigma_F}\right)^e$$

σ_F = Minimum upper yield stress or proof stress of the material, in N/mm^2

e = As given below:

= 0.75 for $\sigma_F > 235$

= 1.00 for $\sigma_F \leq 235$

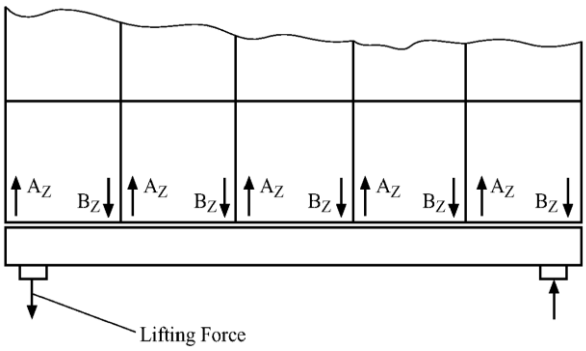

Fig. XV 18-10
Lifting Forces at a Hatch Cover

18.2.11 Hatch cover supports, stoppers and supporting structures

Hatch cover supports, stoppers and supporting structures subject to the provisions of 18.2 are to be in compliance with the following (a) to (c):

(a) For the design of the securing devices for the prevention of shifting, the horizontal mass forces F obtained from the following formula are to be considered. Acceleration in the longitudinal direction, a_x, and in the transverse direction, a_y, does not need to be considered as acting simultaneously.

F = ma

where:

m = Sum of mass of cargo lashed on the hatch cover and mass of hatch cover

a = Acceleration obtained from the following formula:

$a_x = 0.2g$ for longitudinal direction

$a_y = 0.5g$ for transverse direction

(b) The design load for determining the scantlings of stoppers is not to be less than that obtained from 18.2.4(b) of this Chapter and (a) above, whichever is greater. Stress in the stoppers is to be in compliance with the criteria specified in 18.2.5(a)(i) of this Chapter.

(c) The details of hatch cover supporting structures are to be in accordance with the following (i) to (vii):

(i) The nominal surface pressure, in N/mm^2, of a hatch cover is not to be greater than that obtained from the following formula:

$p_{n\,max} = dp_n$ in general
$p_{n\,max} = 3p_n$ for metallic supporting surface not subjected to relative displacements

where:

d = As given by the following formula. Where d exceeds 3, d is to be taken as 3.

= 3.75 - 0.015L

d_{min} = 1.0 in general

= 2.0 for partial loading conditions

L = Length of ship specified in 1.5.1 of this Part.

p_n = As obtained from Table XV 18-10 of this Chapter

(ii) Where large relative displacements of the supporting surfaces are to be expected, the use of material having low wear and frictional properties is recommended.

(iii) Drawings of the supports are to be submitted. In these drawings, the permitted maximum pressure given by the material manufacturer related to long time stress is to be specified.

(iv) When the manufacturer of the vertical hatch cover support material can provide proof that the material is sufficient for the increased surface pressure, not only statically but under dynamic conditions, the permissible nominal surface pressure $p_{n\,max}$, as specified in (i) above, may be relaxed at the discretion of the Society. However, realistic long term distributions of spectra for vertical loads and relative horizontal motion between hatch covers and hatch cover stoppers are as deemed appropriate by the Society.

(v) Irrespective of the arrangement of stoppers, the supports are to be able to transmit the following force ph in the longitudinal and transverse direction.

$$p_h = \mu \frac{p_v}{\sqrt{d}}$$

where:

p_v = Vertical supporting force

μ = Friction coefficient generally to be taken as 0.5. For non-metallic or low-friction materials, the friction coefficient may be reduced as appropriate by the Society. However, in no case μ is to be less than 0.35.

(vi) Stresses in supporting structures are to be in compliance with the criteria specified in 18.2.5(a)(i) of this Chapter.

(vii) For substructures and adjacent constructions of supports subjected to horizontal forces p_h, special consideration is to be given to fatigue strength.

18.2.12 Steel hatchway covers for container carriers

(a) For container carriers with unusually large freeboards, gaskets and securing devices for steel hatchway covers may be suitably dispensed with at the discretion of the Society upon request by the applicant for classification.

(b) Treatment of stowage and segregation of containers containing dangerous goods is to be at the discretion of the Society.

18.2.13 Additional requirement for small hatches fitted on exposed fore deck

For ships of 80 m or more in length L, small hatches located on exposed decks forward of 0.25L are to be of sufficient strength and weathertightness to resist green sea force if the height of the exposed deck in way of those hatches is less than 0.1L or 22 m above the designed maximum load line, whichever is smaller. The length L is the length, in m, of ship as specified in 1.2.1 of this Part or 0.97 times the length of ship on the designed maximum load line, whichever is smaller.

18.3 Machinery Space Openings

18.3.1 Protection of machinery space openings

Machinery space openings are to be enclosed by steel casings.

18.3.2 Exposed machinery space casings

(a) Exposed machinery space casings are to have scantlings not less than that those required in 12.3, Part II of Rules, taking the c-value as 1.0.

(b) The thickness of the top plating of exposed machinery space casings is not to be less than that obtained from the following formulae:

Position 1 = 6.3S + 2.5 mm
Position 2 = 6.0S + 2.5 mm

where:

S = Spacing of stiffeners, in m

18.3.3 Machinery space casings below freeboard deck or within enclosed spaces

The scantlings of machinery space casings below the freeboard deck or within enclosed superstructures or deckhouses are to be in compliance with the following requirements:

(a) The thickness of the plating is to be at least 6.5 mm; where the spacing of stiffeners is greater than 760 mm, the thickness is to be increased at the rate of 0.5 mm per 100 mm excess in spacing. In accommodation spaces, the thickness of the plating may be reduced by 2 mm.

(b) The section modulus of stiffeners is not to be less than that obtained from the following formula:

$1.2Sl^3$ cm^3

where:

l = Tween deck height, in m.

S = Spacing of stiffeners, in m.

18.3.4 Access openings to machinery spaces

(a) All access openings to machinery spaces are to be located in protected positions as far as possible and provided with steel doors capable of being closed and secured from both sides. Such doors in exposed machinery casings on the freeboard deck are to be in compliance with the requirements in 12.4.2 and 12.4.3 of Part II of the Rules.

(b) The sills of doorways in machinery space casings are not to be less than 600 mm in height above the upper surface of the deck in Position 1 and 380 mm in Position 2.

(c) In ships having a reduced freeboard, doorways in the exposed machinery space casings on the freeboard or raised quarter deck are to lead to a space or passageway which is of a strength equivalent to that of the casing and is separated from the stairway to the machinery spaces by a second steel weathertight door of which the doorway sill is to be at least 230 mm in height.

18.3.5 Miscellaneous openings in machinery casings

(a) Coamings of any fiddley, funnel and machinery space ventilator in an exposed position on the freeboard or superstructure deck are to be as high above the deck as reasonable and practicable.

(b) In exposed positions on the freeboard and superstructure decks, fiddley openings and all other openings in the machinery casings are to be provided with strong steel weathertight covers permanently fitted in their proper positions.

(c) Annular spaces around funnels and all other openings in the machinery casings are to be provided with a means of closing capable of being operated from outside the machinery space in case of fire.

18.3.6 Machinery space casings within unenclosed superstructures or deckhouses

Machinery space casings within unenclosed superstructures or deckhouses and doors provided thereon are to be constructed to the satisfaction of the Society, having regard to the degree of protection afforded by the superstructure or deckhouse.

18.4 Companionways and Other Deck Openings

18.4.1 Manholes and flush deck openings

Manholes and flush deck openings in exposed positions on the freeboard and superstructure decks or within superstructures other than enclosed superstructures are to be closed by steel covers capable of being made watertight. These covers are to be secured by closely spaced bolts or to be permanently fitted.

18.4.2 Companionways

(a) Access openings in the freeboard deck are to be protected by enclosed superstructures, or by deckhouses or companionways of equivalent strength and weathertightness.

(b) Access openings in exposed superstructure decks or in the top of deckhouses on the freeboard deck which give access to a space below the freeboard deck or a space within an enclosed superstructure are to be protected by efficient deckhouses or companionways.

(c) Doorways in deckhouse or companionways such as specified in (a) and (b) above are to be provided with doors complying with the requirements in 12.4.2 and 12.4.3 of Part II of Rules.

(d) The sills of doorways in companionways specified in (a) to (c) are not to be less than 600 mm in height above the upper surface of the deck in Position 1 and 380 mm in Position 2.

(e) For deckhouses or superstructures which protect access openings to spaces below the freeboard deck, the height of sills of doorways on the freeboard deck are not to be less than 600 mm. However, where access is provided from the deck above as an alternative to access from the freeboard deck, the height of sills into a bridge or poop or deckhouse may be reduced to 380 mm.

(f) Where the access openings in superstructures and deckhouses which protect access openings to spaces below the freeboard deck do not have closing appliances in accordance with the requirements of 12.4.2 and 12.4.3 of Part II of Rules, the openings to spaces below the freeboard deck are to be considered exposed.

18.4.3 Openings to cargo spaces

Access and other openings to cargo spaces are to be provided with a means of closing capable of being operated from outside the spaces in case of fire. Such closing means for any opening leading to any other space inboard the ship is to be of steel.

Table XV 18-1
Corrosion Additions

Type of ship	Type of structural member		Corrosion addition t_c ,in mm
Container carriers and car carriers	Steel hatch covers		1.0
	Hatchway coamings		1.5
Ships other than those specified above and subject to the application of this section	Single plating type hatch cover		2.0
	Double plating type hatch cover	Top, side and bottom plating	1.5
		Internal structures	1.0
	Hatchway coamings, hatch coaming stays and stiffeners		1.5

Table XV 18-2
Design Vertical Wave Load P_V(1)(2) (kN/m²)

		P_V (kN/m²)
Position 1	For $0.25L_f$ forward	$\frac{9.81}{76}\left[(4.28L_f + 28)\frac{x}{L_f} - 1.71L_f + 95\right]^{(3)}$
	Elsewhere	$\frac{9.81}{76}(1.5L_f + 116)$
Position 2		$\frac{9.81}{76}(1.1L_f + 87.6)$

Notes:

(1) L_f : Length of ship for freeboard defined in 1.2.10 of Part II, in m
x : Distance, in m, of the mid length of the hatch cover under examination from the aft end of L_f

(2) For exposed hatchways in positions other than Position 1 or 2, the value of each design wave load will be specially considered.

(3) Where a Position 1 hatchway is located at least one superstructure standard height higher than the freeboard deck, P_V may be taken as $\frac{9.81}{76}(1.5L_f + 116)$ kN/m².

Table XV 18-3
Minimum Value of P_H (kN/m²)

Unprotected front coamings and hatch cover skirt plates	Others
$25 + \frac{L}{10}$	$12.5 + \frac{L}{20}$

Table XV 18-4
Coefficient k_1 and k_2

k_1	$1 + \frac{3.2\alpha - \gamma - 0.8}{7\gamma + 0.4}$	k_1 is not to be taken as less than 1.0 $\alpha = \frac{l_1}{l}$ $\beta = \frac{I_1}{I_0}$ $\gamma = \frac{Z_1}{Z_0}$
k_2	$1 + 8\alpha^3 \frac{1 - \beta}{0.2 + 3\sqrt{\beta}}$	

l = Overall length of portable beam, in m
l_1= Distance from the end of parallel part to the end of portable beam, in m
I_0= Moment of inertia at mid-span, in cm^4
I_1= Moment of inertia at ends, in cm^4
Z_0= Section modulus at mid-span, in cm^3
Z_1= Section modulus at ends, in cm^3

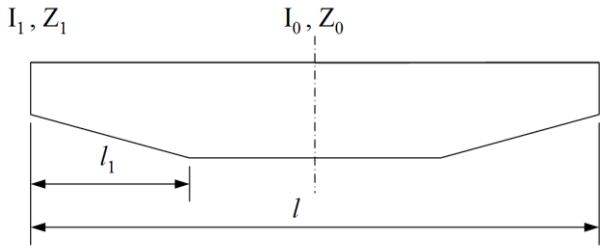

Table XV 18-5
Effective Breadth e_m of Plating of Primary Supporting Members

l/e	0	1	2	3	4	5	6	7	≥ 8
e_{m1}/e	0	0.36	0.64	0.82	0.91	0.96	0.98	1.00	1.00
e_{m2}/e	0	0.20	0.37	0.52	0.65	0.75	0.84	0.89	0.90

Notes:

e_{m1} = Effective breadth, in mm, to be applied where primary supporting members are loaded by uniformly distributed loads or by not less than 6 equally spaced single loads

e_{m2} = Effective breadth, in mm, to be applied where primary supporting members are loaded by 3 or less single loads

l = Length between zero-points of bending moment curve taken equal to:
For simply supported primary supporting members: l_0
For primary supporting members with both ends constant: $0.6l_0$

l_0 = Unsupported length of the primary supporting members

e = Width of plating supported, measured from centre to centre of the adjacent unsupported fields

Table XV 18-6
Correction Factor F_1

Boundary condition	F_1(2)	Edge stiffener
Stiffeners sniped at both ends	1.00	
Guidance value(1) where both ends are effectively connected to adjacent structures	1.05	Flat bars
	1.10	Bulb sections
	1.20	Angles and tee-sections
	1.30	U-type sections(3) and girders of high rigidity

Notes:
(1) Exact values may be determined by direct calculations
(2) An average value of F_1 is to be used for plate panels having different edge stiffeners
(3) A higher value may be taken if it is verified by a buckling strength check of the partial plate field using non-linear FEA and deemed appropriate by the Society. However, such values are not to be greater than 2.0

Table XV 18-7
Coefficient e_1, e_2, e_3 and B

Exponents e_1, e_2, e_3 and B		Plate panel
e_1		$1+\kappa_x^4$
e_2		$1+\kappa_y^4$
e_3		$1+\kappa_x\kappa_y\kappa_\tau^2$
B	For σ_x and σ_y positive (compressive stress)	$(\kappa_x\kappa_y)^5$
	For σ_x or σ_y negative (tension stress)	1

Table XV 18-8
Buckling and Reduction Factors for Plane Elementary Plate Panels

Load case	Edge stress ratio Ψ	Aspect ratio $\alpha = \frac{a}{b}$	Buckling factor K	Reduction factor κ
1 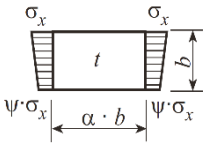	$1 \geq \Psi \geq 0$	$\alpha \geq 1$	$K = \frac{8.4}{\Psi + 1.1}$	$\kappa_x = 1$ for $\lambda \leq \lambda_c$ $\kappa_x = c\left(\frac{1}{\lambda} - \frac{0.22}{\lambda^2}\right)$ for $\lambda > \lambda_c$ $c = (1.25 - 0.12\Psi) \leq 1.25$ $\lambda_c = \frac{c}{2}\left(1 + \sqrt{1 - \frac{0.88}{c}}\right)$
	$0 > \Psi > -1$		$K = 7.63 - \Psi(6.26 - 10\Psi)$	
	$\Psi \leq -1$		$K = 5.975(1 - \Psi)^2$	
2 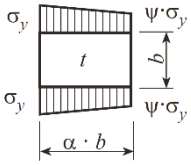	$1 \geq \Psi \geq 0$	$\alpha \geq 1$	$K = F_1\left(1 + \frac{1}{\alpha^2}\right)^2 \frac{2.1}{\Psi + 1.1}$	$\kappa_y = c\left[\frac{1}{\lambda} - \frac{R + F^2(H - R)}{\lambda^2}\right]$ $c = (1.25 - 0.12\Psi) \leq 1.25$ $R = \lambda\left(1 - \frac{\lambda}{c}\right)$ for $\lambda < \lambda_c$ $R = 0.22$ for $\lambda \geq \lambda_c$ $\lambda_c = \frac{c}{2}\left(1 + \sqrt{1 - \frac{0.88}{c}}\right)$ $F = \left(1 - \frac{\frac{K}{0.91} - 1}{\lambda_p^2}\right) c_1 \geq 0$ $\lambda_p^2 = \lambda^2 - 0.5$ for $1 \leq \lambda_p^2 \leq 3$ $c_1 = \left(1 - \frac{F_1}{\alpha}\right) \geq 0$ $H = \lambda - \frac{2\lambda}{c\left(T + \sqrt{T^2 - 4}\right)} \geq R$ $T = \lambda + \frac{14}{15\lambda} + \frac{1}{3}$
	$0 > \Psi > -1$	$1 \leq \alpha \leq 1.5$	$K = F_1\left[\left(1 + \frac{1}{\alpha^2}\right)^2 \times \frac{2.1(1 + \Psi)}{1.1} - \frac{\Psi}{\alpha^2}(13.9 - 10\Psi)\right]$	
		$\alpha > 1.5$	$K = F_1\left[\left(1 + \frac{1}{\alpha^2}\right)^2 \times \frac{2.1(1 + \Psi)}{1.1} - \frac{\Psi}{\alpha^2}\left(5.87 + 1.87\alpha^2 + \frac{8.6}{\alpha^2} - 10\Psi\right)\right]$	
	$\Psi \leq -1$	$1 \leq \alpha \leq \frac{3(1 - \Psi)}{4}$	$K = 5.975F_1\left(\frac{1 - \Psi}{\alpha}\right)^2$	
		$\alpha > \frac{3(1 - \Psi)}{4}$	$K = F_1\left[3.9675\left(\frac{1 - \Psi}{\alpha}\right)^2 + 0.5375\left(\frac{1 - \Psi}{\alpha}\right)^4 + 1.87\right]$	

Table XV 18-8 (continued)
Buckling and Reduction Factors for Plane Elementary Plate Panels

Load case	Edge stress ratio Ψ	Aspect ratio $\alpha = \frac{a}{b}$	Buckling factor K	Reduction factor κ
3 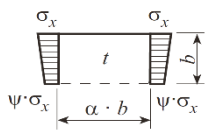	$1 \geq \Psi \geq 0$	$\alpha > 0$	$K = \frac{4\left(0.425 + \frac{1}{\alpha^2}\right)}{3\Psi + 1}$	$\kappa_x = 1$ for $\lambda \leq 0.7$ $\kappa_x = \frac{1}{\lambda^2 + 0.51}$ for $\lambda > 0.7$
	$0 > \Psi > -1$		$K = 4\left(0.425 + \frac{1}{\alpha^2}\right)(1 + \Psi) - 5\Psi(1 - 3.42\Psi)$	
4 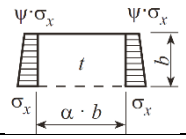	$1 > \Psi > -1$	$\alpha > 0$	$K = \left(0.425 + \frac{1}{\alpha^2}\right)\frac{3 - \Psi}{2}$	
5 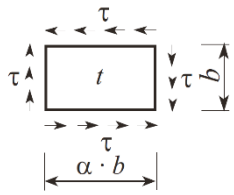	Nil		$K = K_\tau\sqrt{3}$	$\kappa_\tau = 1$ for $\lambda \leq 0.84$ $\kappa_\tau = \frac{0.84}{\lambda}$ for $\lambda > 0.84$
		$\alpha \geq 1$	$K_\tau = \left(5.34 + \frac{4}{\alpha^2}\right)$	
		$0 < \alpha < 1$	$K_\tau = \left(4 + \frac{5.34}{\alpha^2}\right)$	
Boundary condition:		- - - - - plate edge free ——— plate edge simple support		

Table XV 18-9
Moments of Inertia

Section	I_P, in cm^4	I_T, in cm^4	I_ω, in cm^6
Flat bar	$\frac{h_w^3 t_w}{3 \cdot 10^4}$	$\frac{h_w t_w^3}{3 \cdot 10^4}\left(1 - 0.63\frac{t_w}{h_w}\right)$	$\frac{h_w^3 t_w^3}{36 \cdot 10^6}$
Bulb, angle or tee sections	$\left(\frac{A_w h_w^2}{3} + A_f e_f^2\right)10^{-4}$	$\frac{h_w t_w^3}{3 \cdot 10^4}\left(1 - 0.63\frac{t_w}{h_w}\right) + \frac{b_f t_f^3}{3 \cdot 10^4}\left(1 - 0.63\frac{t_f}{b_f}\right)$	For bulb and angle sections: $\frac{A_f e_f^2 b_f^2}{12 \cdot 10^6}\left(\frac{A_f + 2.6A_w}{A_f + A_w}\right)$ For tee-sections: $\frac{b_f^3 t_f e_f^2}{12 \cdot 10^6}$

Table XV 18-10
Permissible Nominal Surface Pressure p_n, in N/mm^2

Material	p_n, when loaded by	
	Vertical force	Horizontal force
Hull structure steel	25	40
Hardened steel	35	50
Plastic materials in steel	50	-

Chapter 19

Machinery Spaces and Tunnels

19.1 General

19.1.1 The construction of machinery spaces is to be in accordance with the requirements in the relevant chapters, in addition to this Chapter.

19.1.2 Machinery spaces are to be sufficiently strengthened by means of web frames, strong beams and pillars or other arrangements. Sectional area of face plates of web frames in machinery spaces is to be bigger than the value obtained from following formula. However, scantlings of web frames may be determined by other suitable calculation approved by the Society.

$$\frac{8K\ell SL}{d_w}\frac{d_w t_w}{600} \quad cm^2$$

where:

K = Coefficient obtained in following formula:

In case that P is equal to C and over:1+0.4(1.36P/C-1)

In case that P is less than C:1+0.2(1.36P/C-1)

P = Maximum continuous output of main engine, in kW.

C = Coefficient obtained in following formula:

In case that ships are 50 m in length and smaller:10L

In case that ships are over 50 m: 35L-1250

ℓ = Vertical distance from the top of inner bottom plating to the top of beams of lowest deck at side of ships, in m.

S = Spacing of web frames, in m.

L = Length of ships, in m.

d_w = Depth of web plates of web frames, in mm.

t_w = Thickness of web plates of web frames, in mm.

19.1.3 All parts of the machinery, shafting, etc. are to be efficiently supported and the adjacent structures are to be adequately stiffened.

19.1.4 In ships of high power engines and in twin screw ships, the structure and attachments of the engines' seating are to be especially strengthened in relation to the engines' proportions, weight, power, type, etc.

19.2 Engine Seatings

19.2.1 In ships having a single bottom in the machinery space, the following applies:

(a) The main engines are to be seated upon thick rider plates laid across the top of deep floors or heavy foundation girders efficiently bracketed and stiffened and having sufficient strength in proportion to the power and size of the engines.

(b) The main lines of bolting that hold down the main engines to the rider plates mentioned in 19.2.1(a) above are to pass through the rider plates into the girder plates provided underneath.

(c) In ships with longitudinal girders of not excessive spacing beneath the engine which is on the centre line of the hull, the centre keelson may be omitted for the section where the engine is located.

(d) Where spacing of girders beneath main engine is narrow, centre girder may be omitted. However, intercostal plates are recommended to be fitted with along centre line.

19.2.2 In ships having a double bottom in the machinery space, the following applies:

(a) The main engines are to be seated directly upon thick inner bottom plating or thick seat plates on the top of heavy foundations so arranged as to effectly distribute the weight.

(b) Additional side girders are to be provided within the double bottom beneath the main lines of bolting and other suitable positions so as to ensure satisfactory distribution of the weight and rigidity of he structure.

19.3 Construction of Boiler Rooms

19.3.1 Boilers are to be supported by deep saddle type floors or by transverse and longitudinal girders so arranged as to effectively distribute the weight.

19.3.2 Where boilers are supported by transverse saddles or girders, the floors in way of same are to be especially stiffened.

19.3.3 Boilers are to be so placed as to ensure accessibility and proper ventilation.

19.3.4 Clearances

(a) Hold bulkheads and decks are to be kept well clear of the boilers and uptakes. Additionally, sufficient spaces are to be allowed for proper access all around the boiler.

(b) Boilers are to be at least 457 mm clear of the tank top, the bunker wall, etc.

(c) Where the clear space is unavoidably less than that required by 19.3.4(b) above, the thickness of the adjacent structure is to be increased, or suitable insulating arrangements are to be provided with.

(d) Available clearances are to be indicated on the plan submitted for approval.

(e) Side sparrings are to be provided on the bulkheads adjacent to the boilers, keeping suitable clearance on their hold sides.

19.4 Block and Auxiliary Foundations

19.4.1 Structure under thrust block

(a) Thrust blocks are to be bolted to efficient foundations extending well beyond thrust blocks and so arranged that the load is effectively distributed into adjacent structures.

(b) Additional intercostal girders with double attachments are to be fitted in way of block foundations as may be required.

19.4.2 Plumber blocks and auxiliary foundations are to be of substantial strength and efficiently stiffened both longitudinally and transversely.

19.5 Tunnels and Tunnel Recesses

19.5.1 Arrangement

(a) In ships with machinery amidships, the shafting is to be enclosed by a watertight tunnel of sufficient dimensions.

(b) Watertight doors are to be provided at the fore end of tunnel. The means of closing and construciton of the watertight doors are to be as required in 15.3 of this part.

(c) In tunnels which are provided with watertight doors in accordance with the requirements in 19.5.1(b), escape trunks are to be provided at a suitable location and they are to lead to the bulkhead deck or above.

19.5.2 Flat side plating

The thickness of plating on flat sides of the tunnel is not to be less than that obtained from the following formula:

$$2.9S\sqrt{h} + 2.5 \quad \text{mm}$$

where:

S = Spacing of stiffeners, in m.

h = Vertical distance at the mid-length of each hold from the lower edge of the side wall plating to the bulkhead deck at the centre line of the ship, in m.

19.5.3 Flat top plating

(a) The thickness of flat plating of the top of tunnels or tunnel recesses is not to be less than that obtained from the formula in 19.5.2 above, h being taken as the height from the top plates to the bulkhead deck at the centre line of the ship.

(b) Where the top of the tunnel or the recess forms a part of a deck, the thickness of the plating is to be increased by at least 1 mm above that obtained from the requirements in 19.5.3(a) above, but it is not to be less than that required for the deck plating at the same position.

19.5.4 Curved top or side plating

The thickness of curved top or side plating is to be determined by the requirments in 19.5.2 above using a stiffnener spacing reduced by 150 mm from the actual spacing.

19.5.5 Top plating under hatchways

Top plating of tunnel under hatchways is to be increased by at least 2 mm or to be protected by wood sheathing of not less than 50 mm in thickness.

19.5.6 Wood sheathings

The wood sheathing mentioned in 19.5.5 above is to be so secured as to keep watertightness of the tunnel where it might be damaged by cargo. Similar consideration is to be taken where structures such as ladder steps are provided in the tunnels.

19.5.7 Stiffeners

(a) Siffneners are to be provided not more than 915 mm apart on the top and side plating of tunnels.

(b) The section modulus of stiffeners is not to be less than that obtained from the following formula. Where the stiffneners are welded to the plating and the end connections are also completely welded, the section modulus may be reduced by 10%.

$$4.4Shl^2 \quad \text{cm}^3$$

where:

l = Distance from the heel of the lower edge of the side wall to the top of the plate at side, in m.

S = Spacing of stiffeners, in m.

h = Vertical distance at mid-length of each hold from the mid-point of l to the bulkhead deck, in m.

(c) Where the ratio of the radius of the rounded tunnel top to the height of the tunnel is comparatively large, the section modulus of stiffeners is to be adequately increased over that specified in 19.5.7(b) above.

(d) Each stiffener is to overlap and to be riveted to the boundary angles, and the lower ends of stiffeners over 150 mm in depth are to be connected to parts such as the inner bottom plating by lug connections.

19.5.8 Construction under masts, stanchion, and other vertical pieces

Where vertical pieces such as masts and stanchions are attached atop tunnels or tunnel recesses, local strengthening is to be provided in proportion to the weight carried.

19.5.9 Tunnel top or tunnel recess top forming part of the deck

Where the top of tunnels or tunnel recesses forms part of the deck; beams, pillars and girders under the top are to be of the scantlings required for similar members of bulkhead recesses.

19.5.10 Ventilators and escape trunks

Escape trunks and ventilators provided in tunnels or tunnel recesses are to be made watertight up to the bulkhead deck and are to be strong enough to withstand the pressure to which they may be subjected.

19.5.11 Tunnels in water or oil tanks

Tunnel in water or oil tanks are to be of equivalent construction and strength to those required for deep tank bulkheads.

19.5.12 Watertight tunnels

Where watertight tunnels similar to shaft tunnels are provided, they are to be of similar construction to the shaft tunnels.

19.5.13 Cylindrical tunnels

Where cylindrical tunnels pass through deep tanks, the thickness of the plating way of the tanks is not to be less than that obtained from the following formula:

$9.1 + 0.134\, d_1\, h$ mm

where:

d_1 = Diameter of tunnel, in m.

h = Greater of the vertical distances given below:

Vertical distance, in m, measured from the bottom of tunnel to the mid-point between the top of tanks and the top of overflow pipes

0.7 times the vertical distance, in m, measured from the bottom of tunnel to the point 2.0 metres above the top of overflow pipes

Chapter 20
Ceiling and Sparring

20.1 Ceiling

20.1.1 Ceiling in single bottom

(a) The close ceiling is to be laid on floors and up to the upper turn of bilges.

(b) The ceiling on the flat on the floors are to be laid in portable sections, or other convenient arrangements are to be arranged for easy removal for cleaning, painting or inspection of the bottom.

20.1.2 Ceiling in double bottom

(a) The ceiling is to be laid from the margin plate to the upper turn of the bilge so arranged as to be readily remvable for inspection of the limbers.

(b) Ceilings are to be laid on the inner bottoms under hatchways, unless the requirements in 5.7.1 of this Part are applied.

(c) Ceilings on the top of double bottoms are to be laid on battens not less than 13 mm in thickness, or to be bedded on the covering required in 23.2.4 of this Part.

20.1.3 The minimum thickness of the ceiling in corresponding to ship length L, in m, is to be as follows:

t = 50 mm		$L \leq 61$
t = 57 mm	61<	$L \leq 76$
t = 63 mm		$L > 76$

20.2 Sparring

20.2.1 In all cargo spaces where it is intended to carry general cargo, the sparring is to be fitted above the bilge ceiling.

20.2.2 Dimension of sparring

(a) The thickness of the sparring is not to be less than 50 mm in finished thickness.

(b) The breadth of the sparring is not to be less than 150 mm.

(c) The clear space between adjacent rows of sparring is not to be more than 230 mm.

(d) Arrangements equivalent to 20.2.2(a) or 20.2.2(c) above may be accepted for the protection of framing.

20.2.3 The sparring is to be fitted in the cleat or in the portable frame for convenience of removal.

20.2.4 The sparring may be omitted in cargo holds of ships such as coal carriers, bulk carriers, ore carriers and similar ships.

20.2.5 In ships intended to carry timbers, hold frames are to be specially protected. However, where it is obvious that the ship is not engaged in the carriage of log cargoes, the protection may be modified.

Chapter 21

Subdivisions and Damage Stability

21.1 General

Ships of applicable size, type and service are to have subdivision and damage stability as required by the Chapter 30A of Part II.

Chapter 22

Means of Access

22.1 General Rules

22.1.1 General

(a) Peak tanks, deep tanks, cofferdams, cargo oil tanks, cargo holds with relative high bilge hopper tanks and other similar enclosed spaces are to be provided with means of access, i.e., stages, ladders, steps or other similar facilities for internal examinations in safety. However, such means are not required in aft peak tanks and deep tanks which are exclusively loaded fuel oil or lubrication oil.

(b) Notwithstanding the 22.1.1(a) above, spaces specified in 22.2 of this Chapter are to comply with the requirements of 22.2.

22.1.2 Means of access to spaces

(a) Safe access to peak tanks, deep tanks, cofferdams, cargo oil tanks, cargo holds and other similar enclosed spaces is to be, in general, direct from the open deck and served by at least one access hatchway or manhole and ladder.

(b) Notwithstanding the 22.1.1(a) above, safe access to lower spaces of spaces divided vertically, may be from other spaces, subject to consideration of ventilation aspects.

(c) Notwithstanding the 22.1.1(a) above, for spaces not greater than 1.5 m in height measuring from the bottom to the top of the open deck on ships of less than 300 gross tonnage, the provision of fixed ladders is not required.

22.1.3 Means of access within spaces

(a) Peak tanks, deep tanks, cofferdams, cargo oil tanks, cargo holds and other similar enclosed spaces are to be provided with means of access to hull structures for examination.

(b) Where unavoidable obstructions such as hull structural members of 600 mm or more in height impedes access to hull structures within the space, appropriate facilities such as ladders or, steps are to be fitted.

22.1.4 Specifications of means of access and ladders

(a) Means of access are to be safe in use.

(b) Permanent means of access are to be of robust construction.

22.1.5 Plans for means of access

Plans showing arrangement for means of access to peak tanks, deep tanks, cofferdams, cargo oil tanks, cargo holds with relative high bilge hopper tanks and other similar enclosed spaces are to be kept on board.

22.2 Special Requirements for Oil Tankers

22.2.1 Application

This section applies to each space within the cargo area and fore peak tanks of oil tankers (as defined in 2.1.2(w)(i) of Part I, of not less than 500 gross tonnage), in place of the requirements in 22.1 of this Chapter. Notwithstanding the above, the provisions in the section, except 22.2.3(a) and (b) and 22.2.5(e), (f) and (g) in relation to access to tanks/spaces, do not need to apply to the cargo tanks of combined oil/chemical tankers which are to comply with the requirements for ships carrying dangerous chemicals in bulk.

22.2.2 General

Each space within the cargo area and fore peak tanks are to be provided with means of access to enable overall and close-up examinations and thickness measurements of the ship's structures to be carried out safely.

22.2.3 Means of access to spaces

(a) Safe access to each space within the cargo area and fore peak tanks is to be direct from the open deck and in accordance with the following (i) to (ii) corresponding to the kind of the space.

(i) Tanks, cofferdams and subdivisions of tanks and cofferdams, having a length of 35 m or more, are to be fitted with at least two access hatchways or manholes and ladders, as far apart as practicable.

(ii) Tanks and cofferdams less than 35 m in length are to be served by at least one access hatchway or manhole and ladder.

(b) Notwithstanding the 22.2.3(a) above, safe access to double bottom spaces, forward ballast tanks or lower spaces of sections divided vertically, may be from a pump-room, deep cofferdam, pipe tunnel, cargo hold, double hull space or similar compartment not intended for the carriage of oil or hazardous cargoes, subject to consideration of ventilation aspects.

(c) The uppermost entrance section of the ladder providing access from the deck to a tank or cofferdam is to be vertical for not less than 2.5 m, but not in excess of 3.0 m measured clear of the overhead obstructions in way of the tank entrance, and be connected to a ladder linking platform which is to be displaced to one side of a vertical ladder. However, where there is a longitudinal or athwartship permanent means of access fitted within 1.6 m and 3 m below the deck head, the uppermost section of the ladder may stop at this means of access.

(d) For oil tankers, access ladders to cargo tanks and other spaces in the cargo area (excluding fore peak tanks) are to be in accordance with the following.

(i) Where two access hatchways or manholes and ladders are required in 22.2.3(a)(i) above, at least one ladder is to be of the inclining type. However, the uppermost entrance section of the ladder is to be vertical in accordance with the provisions of 22.2.3(c) above.

(ii) Where ladders not required to be of the inclined type as specified in 22.2.3(i) above, maybe of a vertical type. Where the vertical distance is more than 6 m, vertical ladders are to be connected by one or more ladder linking platforms, generally spaced not more than 6 m apart vertically and displaced to one side of the ladder. The uppermost entrance section of the ladder is to be in accordance with the provisions of (c) above.

(iii) Where one access hatchways or manholes and ladder is required in 22.2.3(a)(ii) above, an inclined ladder is to be used in accordance with the provisions of 22.2.3(a)(i) above.

(iv) In double hull spaces of less than 2.5 m width, access to the space may be made by means of vertical ladders that are connected to one or more ladder linking platforms genereally spaced not more than 6 m apart vertically and displaced to one side of the ladder. Adjacent sections of ladder are to be laterally offset from each other by at least the width of the ladder. The uppermost entrance section of the ladder is to be in accordance with the provisions of 22.2.3(c) above.

(v) Access from deck to a double bottom space may be made by means of vertical ladders through a trunk. The vertical distance from the deck to a resting platform, between resting platforms, or a resting platform and the tank bottom is generally not to be more than 6 m unless approved otherwise by the Society.

22.2.4 Means of access within spaces

(a) For oil tankers, cargo oil tanks and water ballast tanks except those specified in 22.2.4(b) and 22.2.4(c) as below are to be provided with means of access in accordance with the following (i) to (iv).

(i) For tanks of which the height is not less than 6 m, permanent means of access are to be provided in accordance with (1) to (6) as follows.

(1) a continuous athwartship permanent mean of access is to be arranged at each transverse bulkhead on the stiffened surface, at a minimum of 1.6 m to a maximum of 3 m below the deck head;

(2) at least one continuous longitudinal permanent means of access is to be provided at each side of the tank. One of these accesses is to be at a minimum of 1.6 m to a maximum of 6 m below the

deck head and the other is to be at a minimum of 1.6 m to a maximum of 3 m below the deck head;

(3) access between the arrangements specified in 22.2.4(a)(i)(1) and 22.2.4(a)(i)(2) above and from the main deck to either 22.2.4(a)(i)(1) or 22.2.4(a)(i)(2) above is to be provided;

(4) a continuous longitudinal permanent means of access integrated into the structural members on the stiffened surface of a longitudinal bulkhead, in alignment, where possible, with horizontal girders of transverse bulkheads is to be provided for access to the transverse webs from the upper deck and tank bottom unless permanent fittings are installed at the uppermost platform for use as an alternative means deemed appropriate by the Society, for inspection at intermediate heights;

(5) for ships having cross-ties which are 6 m or more above tank bottom, a transverse permanent means of access on the cross-ties providing access to the tie flaring brackets at both sides of the tank, with access from one of the longitudinal permanent means of access in 22.2.4(a)(i)(4) above; and

(6) an alternative means deemed appropriate by the Society may be provided for small ships as an alternative to (4) for small ships with cargo oil tank less than 17 m in height.

(ii) For tanks less than 6 m in height, an alternative means deemed appropriate by the Society or portable means may be utilized in lieu of the permanent means of access.

(iii) Notwithstanding the 22.2.4(a)(i) and 22.2.4(a)(ii) above, tanks not containing internal structures need not to be provided with permanent means of access.

(iv) Means of access deemed appropriate by the Society are to be provided for access to under deck structures, transverse webs and cross-ties outside the reach of permanent and/or portable means of access, as required in the above (i) and (ii).

(b) For oil tankers, water ballast wing tanks of less than 5 m width forming double side spaces and their bilge hopper sections are to be provided with means of access in accordance with the following (i) to (iii).

(i) For double side spaces above the upper knuckle point of the bilge hopper sections, permanent means of access are to be provided in accordance with (1) to (3):

(1) where the vertical distance between horizontal uppermost stringer and deck head is 6 m or more, one continuous longitudinal permanent means of access is to be provided for the full length of the tank with a means to allow passing through transverse webs installed at a minimum of 1.6 m to a maximum of 3 m below the deck head with a vertical access ladder at each end of the tank;

(2) a continuous longitudinal permanent means of access integrated in the structure at a vertical distance not exceeding 6 m apart is to be provided; and

(3) plated stringers are, as far as possible, to be in alignment with horizontal girders of transverse bulkheads.

(ii) For bilge hopper sections of which the vertical distance from the tank bottom to the upper knuckle point is 6 m and over, one longitudinal permanent means of access is to be provided for the full length of the tank in accordance with the following (1) and (2). It is to be accessible by vertical permanent means of access at each end of the tank.

(1) The longitudinal continuous permanent means of access may be installed at a minimum 1.6 m to a maximum of 3 m from the top of the bilge hopper section. A platform extending from the longitudinal continuous permanent means of access in way of the web frame may be used to access the identified structural critical areas.

(2) Alternatively, the continuous longitudinal permanent means of access may be installed at a minimum of 1.2 m below the top of the clear opening of the web ring allowing the use of portable means of access to reach identified structural critical areas.

(iii) Where the vertical distance referred to in (ii) is less than 6 m, alternative means deemed as appropriate by the Society or portable means of access may be utilized in lieu of the permanent means of access. To facilitate the operation of the alternative means of access, in-line openings in horizontal stringers are to be provided. The openings are to be of an adequate diameter and are to have suitable protective railings.

(c) For fore peak tanks with a depth of 6 m or more at the centerline of the collision bulkhead, a suitable means of access are to be provided for access to critical areas such as the underdeck structure, stringers, collision bulkhead and side shell structure in accordance with the following (i) and (ii).

(i) Stringers of less than 6 m in vertical distance from the deck head or a stringer immediately above are considered to provide suitable access in combination with portable means of access.

(ii) Where vertical distance between the deck head and stringers, stringers or the lowest stringer and the tank bottom is not less than 6 m, alternative means of access deemed appropriate by the Society is to be provided.

(d) Where the Society deems that a permanent means of access may be susceptible to damage during normal cargo loading operations or is impracticable to fit a permanent means of access, alternative means of access deemed appropriate by the Society may be utilized in lieu of those specified in (a) to (c) above, provided that the means of attaching, rigging, suspending or supporting them forms a permanent part of the ship's structure.

22.2.5 Specifications for means of access and ladders

(a) Permanent means of access are, in general, to be integral to the structure of the ships, thus ensuring that they are robust. Where deemed necessary by the Society for facilitating that such means of access are of integral parts of the structure itself, reasonable deviations from the requirements of the position of means of access in 22.2.3 and/or 22.2.4 may be accepted.

(b) Elevated passageways forming sections of a permanent means of access, where fitted, are to have a minimum clear width of 600 mm, except for going around vertical webs where the minimum clear width may be reduced to 450 mm, and have guardrails over the open side of their entire length.

(c) Sloping parts of the access are to be a non-skid construction.

(d) Elevated passageways forming sections of a permanent means of access, are to be provided with guardrails of 1,000 mm in height and consist of a rail and an intermediate bar 500 mm in height and of substantial construction, with stanchions not more than 3 m apart, on the open side.

(e) For access through horizontal openings, hatches or manholes, the dimensions are to be sufficient to allow a person wearing a self-contained air-breathing apparatus and protective equipment to ascend or descend any ladder without obstruction and also provide a clear opening to facilitate the hoisting of an injured person from the bottom of the space. The minimum clear opening is not to be less than 600 mm × 600 mm. When access to a cargo hold is arranged through the cargo hatch, the top of the ladder is to be placed as close as possible to the hatch coaming. Access hatch coamings having a height greater than 900 mm are also to have steps on the outside in conjunction with the ladder.

(f) For access through vertical openings, or manholes, in swash bulkheads, floors, girders and web frames providing passage through the length and breadth of the space, the minimum opening is not to be less than 600 mm × 800 mm at a height of not more than 600 mm from the bottom shell plating unless gratings or other foot holds are provided.

(g) For oil tankers of less than 5,000 tonnes deadweight, smaller dimensions for the openings referred to in (e) and (f) above may be approved by the Society in special circumstances, if the ability to traverse such openings or to remove an injured person can be proved to the satisfaction of the Society.

(h) Access to permanent means of access and vertical openings from the ship's bottom is to be provided by means of easily accessible passageways, ladders or treads. Treads are to be provided with lateral support for the foot. Where the rungs of ladders are fitted against a vertical surface, the distance from the center of the rungs to the surface is to be at least 150 mm. Where vertical manholes are fitted higher than 600 mm above the walking level, access is to be facilitated by means of treads and hand grips with platform landings on both sides.

(i) For ladders or similar facilities forming sections of a permanent means of access, their specifications are to the satisfaction of the Society.

22.2.6 Ship structure access manual

(a) For every ship, means of access to carry out overall and close-up inspections and thickness measurements are to be described in a Ship Structure Access Manual approved by the Society, any change of contents of which is to be updated and an updated copy of which is to be kept on board. The Ship Structure Access Manual is to include the following for each space.

(i) Plans showing the means of access to the space, with appropriate technical specifications and dimensions;

(ii) Plans showing the means of access within each space to enable an overall inspection to be carried out, with appropriate technical specifications and dimensions. The plans are to indicate from where each area in the space can be inspected;

(iii) Plans showing the means of access within the space to enable close-up inspections to be carried out, with appropriate technical specifications and dimensions. The plans are to indicate the positions of critical structural areas, whether the means of access is permanent or portable and from where each area can be inspected;

(iv) Instructions for inspecting and maintaining the structural strength of all means of access and means of attachment, taking into account any corrosive atmosphere that may be within the space;

(v) Safety instructions for when rafting is used for close-up inspections and thickness measurements;

(vi) Instructions for the rigging and use of any portable means of access in a safety manner;

(vii) An inventory of all portable means of access; and

(viii) Records of periodical inspections and maintenance of the ship's means of access.

(b) Where alternative means of access are adapted in accordance with the provisions of 22.2.4 of this Chapter, a means for safety operation and rigging of such alternative means to and from and within the spaces are to be clearly described in the Ship Structure Access Manual.

Chapter 23

Painting

23.1 Painting

23.1.1 General

(a) All steelworks are to be coated with a suitable paint. Special requirements may be additionally made by the Society in accordance with the kind of ships, purpose of spaces, etc. However, where it is recognized by the Society that the spaces are effectively protected against corrosion of steel works by the means other than painting or due to the properties of the cargoes, etc., painting may be omitted.

(b) Steelworks in tanks intended for water may be coated with wash cement in lieu of paint.

(c) The surface of steelworks is to be thoroughly cleaned and loose rust, oil and other harmful adhesives are to be removed before being painted. At least the outer surface of shell plating below the load line is to be sufficiently free from rust and mill scale before painting.

23.1.2 Protective coatings in dedicated seawater ballast tanks and double-side skin spaces

All dedicated sea water ballast tanks in all types of ships of not less than 500 GT engaged on international voyages are to have protective coatings in compliance with the requirements of IMO Resolution MSC.215(82).

23.1.3 Corrosion protection for cargo oil tanks

Cargo oil tanks of crude oil tankers of 5000 DWT and above engaged on international voyages are to have protective coatings. The performance standard for protective coatings is to be in compliance with the requirements of IMO Resolution MSC.288(87) or alternative means by IMO Resolution MSC.289(87).

23.2 Cementing

23.2.1 General

The bottom in ships with single bottoms, the bilges in all ships and the double bottoms in the boiler spaces of all ships are to be efficiently protected by Portland cement or other equivalent materials which cover the plates and frames as far as the upper turn of bilge. However, cement protection may be dispensed with in the bottom of the space solely used for carriage of oil.

23.2.2 Portland cement

Portland cement is to be mixed with fresh water and sand or other satisfactory substances, in the proportion of about one part of cement to two of sand.

23.2.3 Thickness of cement

The thickness of cement is not to be less than 20 mm at the edges.

23.2.4 Special consideration for tank top plating

The top plating of tanks, where ceiled directly, is to be covered with good tar put on hot and well sprinkled with cement powder, or with other equally effective coatings.

Chapter 24

Rudders

24.1 General

24.1.1 Application

(a) The requirements in this Chapter apply to double plate rudders of stream line section and ordinary shape, being divided into the following types, and single plate rudders.

(i) Type I: Rudders with upper and bottom pintles (See Fig. XV 24-1 as below)

(ii) Type II: Rudders with neck bearing and bottom pintle (See Fig. XV 24-1 as below)

(iii) Type III: Rudders having no bearing below the neck bearing (See Fig. XV 24-1 as below)

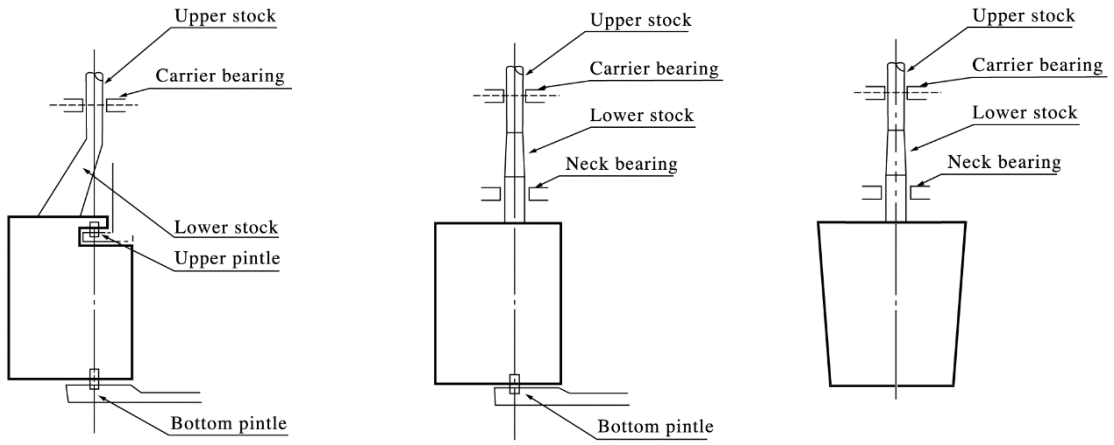

Type I Type II Type III

Fig. XV 24-1
Different Types of Rudders

(b) The construction of rudders having three or more pintles and of those having special shape or sectional form will be specially considered by the Society.

(c) The construction of rudders designed to move more than 35 degrees on each side will be specially considered by the Society.

(d) Rudders not covered in 24.1.1(a) above are subject to special consideration, provided that all the required calculations are prepared and submitted for review in full compliance with the requirements in this section. Where direct analyses adopted to justify an alternative design are to take into consideration all relevant modes of failure, on a case by case basis. These failure modes may include, amongst others: yielding, fatigue, buckling and fracture. Possible damages caused by cavitation are also to be considered. Validation by laboratory tests or full scale tests may be required for alternative design approaches.

24.1.2 Materials

(a) Rudder stocks, pintles, flanges, coupling bolts, keys and cast parts of rudders are to be made of rolled, forged steel or cast carbon manganese steel conforming to the requirements of Part XI.

(b) Welded part of rudders are to be made of approval rolled hull materials.

(c) Material factor K

(i) The required scantlings of rudders may be adjusted as the materials of rudders include higher strength steels. With adjusted scantling, the material factor K is to be the values specified in 1.4.1(b)(i) of this Part.

(ii) For rudder stocks, pintles, keys and bolts the minimum yield stress is not to be less than 200 N/mm^2. The requirements in this Chapter are based on a material's yield stress of 235 N/mm^2. If material is used having a yield stress differing from 235 N/mm^2, the material factor K is to be determined as specified in 1.5.2(c) of Part II.

(d) When the diameter of rudder stock is reduced because of using steels with a yield stresses exceeding 235 N/mm^2, special consideration is to be given to deformation of the rudder stock to avoid excessive edge pressures at the edge of bearings by the Society.

24.1.3 Welding and design details

(a) Slot welding is to be limited as far as possible. Slot welding is not to be used in areas with large in-plane stresses transversely to the slots or in way of cut-out areas of Type I rudder.

When slot welding is applied, the length of slots is to be minimum 75 mm with breadth of 2 × t, where t is the rudder plate thickness (mm). The distance between ends of slots is not to be more than 125 mm (See Fig. XV 24-2 of this Chapter). The slots are to be fillet welded around the edges and filled with a suitable compound, e.g. epoxy putty. Slots are not to be filled with weld.

Continuous slot welds may be used in lieu of slot welds. When continuous slot welding is applied, the root gap is to be between 6 ~ 10 mm. The bevel angle is to be at least 15 degrees (See Fig. XV 24-3 of this Chapter).

(b) In way of the rudder horn recess of Type I rudder the radii in the rudder plating are not to be less than 5 times the plate thickness, but in no case less than 100 mm. Welding in side plate are to be avoided in or at the end of the radii. Edges of side plate and weld adjacent to radii are to be ground smooth.

(c) Welds between plates and heavy pieces (solid parts in forged or cast steel or very thick plating) are to be made as full penetration welds. In way of highly stressed areas e.g. cut-out of Type I rudders and upper part of Type III rudders, cast or welding on ribs is to be arranged. Two sided full penetration welding is normally to be arranged.

Where back welding is impossible, one side welding using steel backing bars is, in principle, to be performed. In such cases, one-sided continuous welding is to be used to weld the steel backing bars to heavy pieces. Other welding procedures, however, may be approved when deemed appropriate by the Society.

(d) Requirements for welding and design details of rudder trunks are described in 24.10 of Part II.

(e) Requirements for welding and design details when the rudder stock is connected to the rudder by horizontal flange coupling are described in 24.5.1 of Part II.

24.1.4 Special consideration for frequently steering

(a) For rudders intended for ships which may be frequently steered at a large helm angle when sailing at their maximum speed, such as fishing vessels, the diameters of rudder stocks and pintles, and the section modulus of main pieces, are not to be less than 1.1 times as required in this Chapter.

(b) For rudders intended for ships which may require quick steering, the diameter of rudder stocks is to be properly increased beyond the requirements in this Chapter.

24.1.5 Design and arrangement requirements

(a) Sleeves and bushes

Bearings located up to well above the designed maximum load line are to be provided with sleeves and bushes.

(b) Rudder carriers

Suitable rudder carriers are to be provided according to the form and the weight of the rudder, and care is to be taken to provide efficient lubrication at the support.

(c) Prevention of jumping

A suitable arrangement is to be provided to prevent the rudder from jumping due to wave shocks.

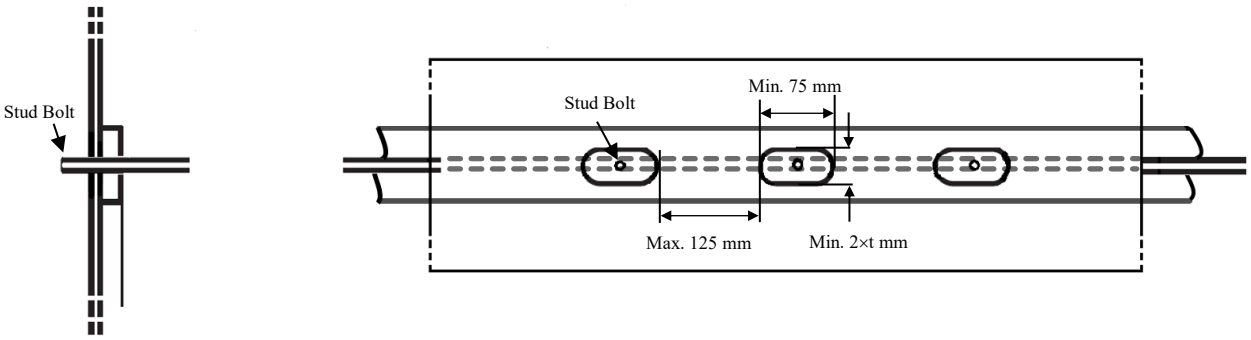

Fig. XV 24-2
Slot Welding

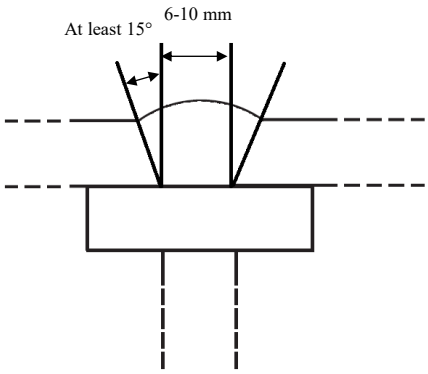

Fig. XV 24-3
Root Gap and Bevel Angle

24.2 Rudder Force and Rudder Torque

24.2.1 Rudder force

The rudder force upon which the rudder scantlings are to be based is to be determined from the following formula for ahead and astern conditions. Appropriate consideration is to be given to the rudder force if the propeller produces an extraordinary thrust, e.g., when the rudder is located behind the propeller.

$F = 132\ K_1\ K_2\ K_3\ A\ V^2$ N

where:

F = Rudder force, in N.

A = Area of rudder blade, in m^2.

V = Maximum service speed of ship, in knots, with the ship on summer load waterline, when the service speed ≥ 10 knots.

= $\frac{1}{3}(V + 20)$ when the service speed < 10 knots

= Maximum astern speed for astern condition, however in no case less than 50% of maximum service speed, in knots.

K_1 = Factor depending on the aspect ratio λ of the rudder area.

= $\frac{1}{3}(\lambda + 2)$

λ = $\frac{h^2}{A_t} \leq 2$

h = Mean height of rudder area, in m, as shown in Fig. XV 24-4 of this Chapter.

A_t = Sum of rudder blade area A and area of rudder post or rudder horn, if any, within the mean height h, in m^2.

K_2 = Factor depending on the rudder profile as specified in Table XV 24-1 of this Chapter.

K_3 = 0.8 for rudders outside the propeller jet.

= 1.15 for rudders behind a fixed propeller nozzle.

= 1.0 otherwise.

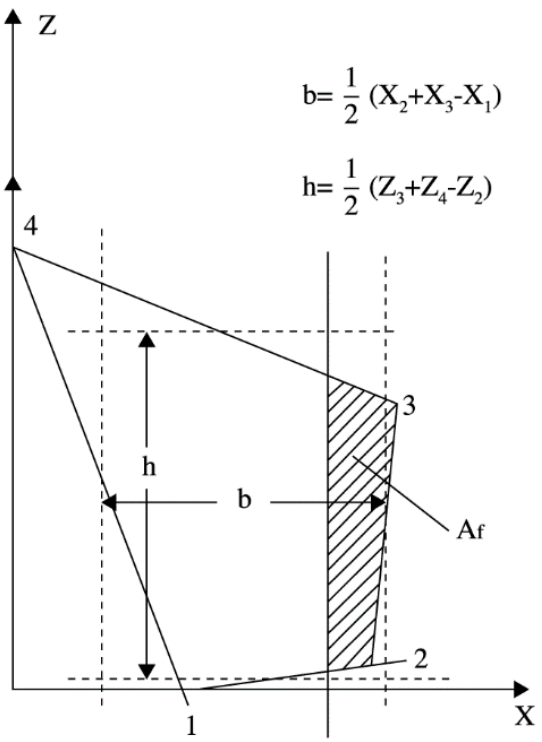

Fig. XV 24-4
Rudder Blade without Cutout

Table XV 24-1
Factor of K_2

Profile type	K_2	
	Ahead condition	Astern condition
NACA-00 series Göttingen 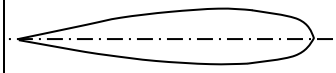	1.10	0.80
Flat side 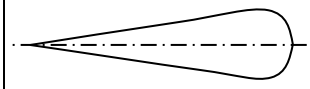	1.10	0.90
Hollow 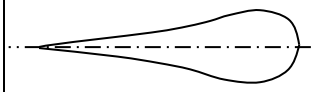	1.35	0.90
High lift rudders	1.70	to be specially considered; if not known: 1.30
Fish tail	1.40	0.80
Single plate 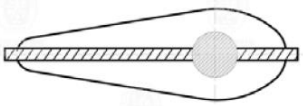	1.00	1.00
Mixed profiles (e.g. HSVA)	1.21	0.90

24.2.2 Rudder torque (for type II and type III rudders)

The rudder torque is to be calculated for both the ahead and astern condition from the following formula:

$Q = F \times r$ N-m

where:

Q = Rudder torque, in N-m.

r = b (α– k), in m,

≥ 0.1b for ahead condition, in m.

b = Mean breadth of rudder area, in m, see Fig. XV 24-4.

α = 0.33 for ahead condition.

= 0.66 for astern condition.

k = Balance factor.

$= \frac{A_f}{A}$

A_f = Portion of the rudder blade area situated ahead of the center line of the rudder stock, in m^2.

A = As specified in (a) above.

24.2.3 Rudder torque (for type I rudders)

The total resulting torque may be taken as:

$Q = Q_1 + Q_2$ N-m

where:

Q = Total torque, in N-m.

$\geq 0.1F\left(\frac{A_1b_1 + A_2b_2}{A}\right)$ for ahead condition

Q_1 = $F_1 \times r_1$ in N-m

Q_2 = $F_2 \times r_2$ in N-m

r_1 = $b_1(\alpha - k_1)$, lever of A_1, in m.

r_2 = $b_2(\alpha - k_2)$, lever of A_2, in m.

b_1, b_2 = Mean breadth of partial areas A_1 and A_2 respectively in accordance with Fig. XV 24-4.

α = 0.33 for ahead condition.

= 0.66 for astern condition.

= 0.25 for ahead condition with concerned rudder part behind a fixed structure such as rudder horn.

= 0.55 for astern condition with concerned rudder part behind a fixed structure such as rudder horn.

$k_1 = \frac{A_{1f}}{A_1}$

$k_2 = \frac{A_{2f}}{A_2}$

24.3 Rudder Strength Calculation

24.3.1 Rudder strength calculation

The rudder strength is to be sufficient to withstand the rudder force and rudder torque as given in 24.2 of this Chapter. When the scantling of each part of a rudder is determined, the following moments and forces are to be considered.

For rudder body: bending moment and shear force

For rudder stock: bending moment and torque

For pintle bearing and rudder stock bearing: supporting force

24.3.2 Bending moments and shear forces

The bending moments, shear forces, and supporting forces to be considered are to be determined by direct calculation or by an approximate simplified method. Annex of IACS UR S10: "Guidelines for Calculation of Bending Moment and Shear Force Distribution" or other meothds as deemed appropriate by the Society may be accecptable.

24.4 Rudder Stock Scantlings

24.4.1 Upper stocks

The diameter d_{us} of the upper stock, which is the stock above the bearing centre of the rudder carrier required for the transmission of the rudder torque, is to be determined such that torsional stress does not exceed 68/K (N/mm^2). The rudder stock diameter for the transmission of the rudder torque is therefore not to be less than:

$$d_{us} = 4.2 \times \sqrt[3]{QK} \qquad \text{mm}$$

where:
K = Material factor as specified in 24.1.2 of this Chapter.
Q = Torque as specified in 24.2.2 or 24.2.3 of this Chapter.

24.4.2 Lower stocks

(a) The diameter d_{ls} of the lower stock, which is the stock below the bearing centre of the rudder carrier subject to the combined forces of torque and bending moment, is to be determined such that the equivalent stress in the rudder stock does not exceed 118/K (N/mm^2).

(b) Stress and lower stock diameter

(i) The equivalent stress σ_e is to be obtained from the following formula:

$$\sigma_e = \sqrt{\sigma_b^2 + 3\tau_t^2} \qquad \text{N/mm}^2$$

(ii) The bending stress acting on the lower stock is to be obtained from the following formula:

$$\sigma_b = 10.2 \times 10^3 \, M / d_{ls}^3 \qquad \text{N/mm}^2$$

where:
M = Bending moment (N-m) at the section of considered rudder stock

(iii) The torsional stress acting on the lower stock is to be obtained from the following formula:

$$\tau_t = 5.1 \times 10^3 Q / d_{ls}^3 \qquad \text{N/mm}^2$$

where:
Q = Torque as specified in 24.2.2 or 24.2.3.

(iv) When the horizontal section of the lower stock forms a circle, the lower stock diameter d_{ls} may be determined by the following formula:

$$d_{ls} = d_{us} \sqrt[6]{1 + \frac{4}{3}\left(\frac{M}{Q}\right)^2} \qquad \text{mm}$$

24.5 Rudder Plating, Rudder Frames and Rudder Main Pieces

24.5.1 Rudder plating

The thickness of the rudder side, top and bottom plating made of ordinary hull structural steel is not to be less than the value obtained from the following formula:

$$t = 5.5 S\beta \sqrt{\left[d_f + (F \times 10^{-4}) / A\right] \times K} + 2.5 \qquad \text{mm}$$

where:
d_f = Summer loadline draught of the ship, in m.

F = Rudder force, in N.

A = Rudder area, in m^2.

$\beta = \sqrt{1.1 - 0.5\left(\frac{s}{b}\right)^2}$; max. 1.00 as $\frac{b}{s} \geq 2.5$

s = Smallest unsupported width of plating, in m.

b = Greatest unsupported width of plating, in m.

K = Material factor for the rudder plating as given in 24.1.2(c) of this Chapter.

24.5.2 Rudder frames

(a) The rudder body is to be stiffened by horizontal and vertical rudder frames enabling it to withstand bending like a girder.

(b) The standard spacing of horizontal rudder frames is to be obtained from the following formula:

0.2(L/100) + 0.4 m

(c) The standard distance from the vertical rudder frame forming the rudder main piece to the adjacent vertical frame is to be 1.5 times the spacing of horizontal rudder frames.

(d) The thickness of rudder frames is not to be less than 8 mm or 70% of the thickness of the rudder plates as given in 24.5.1 above, whichever is greater.

24.5.3 Mainpiece

(a) Vertical rudder frames forming the rudder main piece are to be arranged forward and afterward of the centreline of the rudder stock at a distance approximately equal to the thickness of the rudder if the main piece consists of two rudder frames, or at the centreline of the rudder stock if the main piece consists of one rudder frame.

(b) The section modulus of the main piece is to be calculated in conjunction with the vertical rudder frames specified in 24.5.3(a) above and the rudder plates attached thereto. The breadth of the rudder plates normally taken for the calculation is to be as follows:

(i) Where the main piece consists of two rudder frames, the breadth is 0.2 times the length of the main piece.

(ii) Where the main piece consists of one rudder frame, the breadth 0.16 times the length of the main piece.

(c) Determination of section modulus and web area

(i) The section modulus and the web area of a horizontal section of the main piece are to be determined so that bending stress, shear stress and equivalent stress should not exceed the following stresses, respectively.

Bending stress : $\sigma_b = \frac{110}{K}$ N/mm^2

Shear stress : $\tau = \frac{50}{K}$ N/mm^2

Equivalent stress : $\sigma_b = \sqrt{\sigma_b^2 + 3\tau_t^2} = \frac{110}{K}$ N/mm^2

where:

K: Material factor for the rudder main piece as given in 24.1.2(c) of this Chapter.

(ii) In the case of a Type I rudder, however, the section modulus and the web area of a horizontal section of the main piece in way of cut-outs are to be determined so that bending stress, shear stress and equivalent stress should not exceed the following stresses, respectively, regardless of high tensile or ordinary steels.

Bending stress : $\sigma_b = \frac{110}{K}$ N/mm^2

Shear stress : $\tau = \frac{50}{K}$ N/mm^2

Equivalent stress : $\sigma_b = \sqrt{\sigma_b^2 + 3\tau_t^2} = \frac{110}{K}$ N/mm^2

where:

K: Material factor for the rudder main piece as given in 24.1.2(c) of this Chapter.

(d) The upper part of the main piece is to be so constructed as to avoid structural discontinuity.

(e) The maintenance openings are to be rounded off properly.

24.5.4 Connections

Rudder plates are to be effectively connected to rudder frames, free from defects, with due attention paid to the workmanship.

24.5.5 Painting and draining

The internal surfaces of rudders are to be coated with effective paint, and a means for draining is to be provided at the bottom of the rudders.

24.6 Connections of Rudder Blade Structure with Solid Parts

24.6.1 Solid part protrusions

(a) Solid parts in forged or cast steel, which house the rudder stock or the pintle, are normally to be provided with protrusions.

(b) These protrusions are not required when the web plate thickness is less than:

(i) 10 mm for web plates welded to the solid part on which the lower pintle of Type I rudders is housed and for vertical web plates welded to the solid part of the rudder stock coupling of Type III rudders.

(ii) 20 mm for other web plates.

24.6.2 The solid parts are in general to be connected to the rudder structure by means of two horizontal web plates and two vertical web plates.

24.6.3 Minimum section modulus of the connection with the rudder stock housing

The section modulus of the cross-section of the structure of the rudder blade (cm^3) formed by vertical web plates and rudder plating, which is connected with the solid part where the rudder stock is housed is to be not less than:

$$C_s d^3 \left(\frac{H_E - H_x}{H_E}\right) \frac{K}{K_s} 10^{-4} \qquad cm^3$$

where:

C_s = Coefficient, to be taken equal to:

= 1.0 if there is no opening in the rudder plating or if such openings are closed by a full penetration welded plate

= 1.5 if there is an opening in the considered cross-section of the rudder

d = Rudder stock diameter, in mm.

H_E = Vertical distance between the lower edge of the rudder blade and the upper edge of the solid part, in m.

H_x = Vertical distance between the considered cross-section and the upper edge of the solid part, in m.

K = Material factor for the rudder blade plating as given in 24.1.2(c) of this Chapter.

K_s = Material factor for the rudder stock as given in 24.1.2(c) of this Chapter.

The actual section modulus of the cross-section of the structure of the rudder blade is to be calculated with respect to the symmetrical axis of the rudder. The breadth of the rudder plating (m) to be considered for the calculation of section modulus is to be not greater than:

$b = s_v + 2H_x / 3$ (m)

where:

s_v = Spacing between the two vertical webs, in m (see Fig. XV 24-5 of this Chapter).

Where openings for access to the rudder stock nut are not closed by a full penetration welded plate, they are to be deducted.

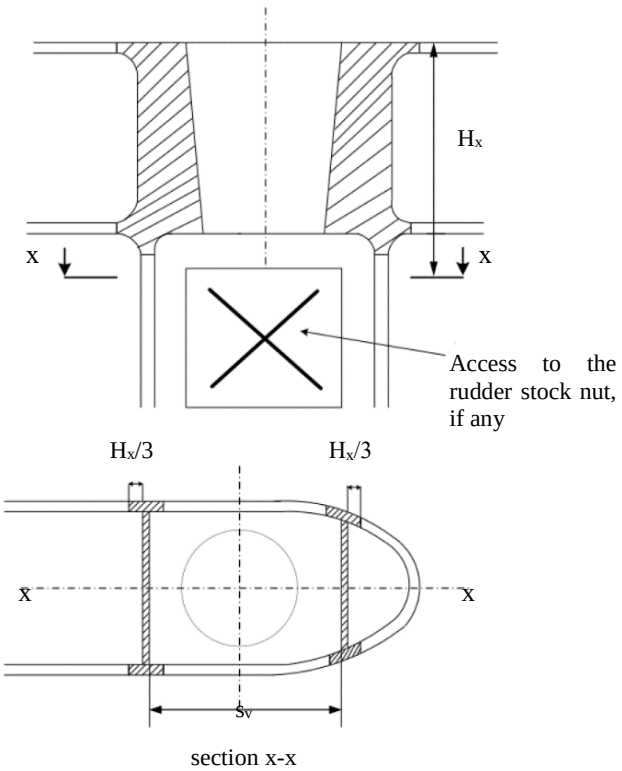

Fig. XV 24-5
Cross-section of the Connection between Rudder Blade Structure and Rudder Stock Housing

24.6.4 Thickness of the horizontal web plates

The thickness of the horizontal web plates connected to the solid parts (mm), as well as that of the rudder blade plating between these webs, is to be not less than the greater of the following values:

$t_H = 1.2\ t$ (mm)
$t_H = 0.045\ d_s^2 / s_H$ (mm)

where:

t = As defined in 24.5.1 of this Chapter.

d_s = Diameter, in mm, to be taken equal to:

= d_{ls} for the solid part housing the rudder stock as specified in 24.4.2 of this Chapter.

= d_p , for the solid part housing the pintle as per 24.9.1 of this Chapter.

s_H = Spacing between the two horizontal web plates, in mm

The increased thickness of the horizontal webs is to extend fore and aft of the solid part at least to the next vertical web.

24.6.5 Thickness of the vertical web plates

(a) The thickness of the vertical web plates welded to the solid part where the rudder stock is housed as well as the thickness of the rudder side plating under this solid part is to be not less than the values obtained (mm) from Table XV 24-2 as below.

(b) The increased thickness is to extend below the solid piece at least to the next horizontal web.

Table XV 24-2
Thickness of Side Plating and Vertical Web Plates

Type of rudder	Thickness of vertical web plates (mm)		Thickness of rudder plating (mm)	
	Rudder blade without opening	Rudder blade with opening	Rudder blade without opening	Area with opening
Rudder supported by sole piece	1.2t	1.6t	1.2t	1.4t
Semi-spade and spade rudders	1.4t	2.0t	1.3t	1.6t
Where: t = thickness of the rudder plating, in mm, as defined in 24.4.2 of this Chapter.				

24.7 Single Plate Rudders

24.7.1 Blade thickness

The blade thickness, t_b, is not to be less than the value obtained from the following formula:

$$t_b = 1.5sV\sqrt{K} + 2.5 \quad \text{mm}$$

where:

s = Spacing of stiffening arms, in m, not to exceed 1 m.

V = Speed, in knots, as specified in 24.2.1.

K = Material factor for the rudder plating as given in 24.1.2(c).

24.7.2 Rudder arm

(a) The thickness of rudder arms is not to be less than the blade thickness as specified in 24.7.1 above.

(b) The section modulus Z of each set of arms about the axis of the rudder stock is not to be less than the value obtained from the following formula:

$$Z = 0.5sC^2V^2K_a \qquad cm^3$$

where:

s = Spacing of stiffening arms, in m, not to exceed 1 m.

V = Speed, in knots, as specified in 24.2.1.

C = Horizontal distance from the aft edge of the rudder to the centerline of the rudder stock, in m.

K_a = Material factor for rudder arm as specified in 24.1.2(c).

24.7.3 Mainpiece

(a) The diameter of main piece is not to be less than that of lower rudder stocks.

(b) For rudders without bearing below the neck bearing, the main piece diameter may be reduced gradually within the lower 1/3 area of the rudder, and may be 75% of the specified diameter at the bottom part.

24.8 Rudder Stock Couplings

24.8.1 Horizontal flange couplings

(a) Coupling bolts are to be reamer bolts. The diameter of the coupling bolts is not to be less than the value obtained from the following formula:

$$d_b = 0.62\sqrt{\frac{d^3K_b}{ne_mK_s}} \qquad mm$$

where:

d = Stock diameter, in mm, taken equal to the greater of the d_{us} or d_{ls} as specified in 24.4.1 and 24.4.2 of this Chapter.

n = Total number of reamer bolts, which is not to be less than 6.

e_m = Mean distance of the bolt axes from the center of the bolt system, in mm.

K_b = Material factor for the bolt as specified in 24.1.2(c) of this Chapter.

K_s = Material factor for the stock as specified in 24.1.2(c) of this Chapter.

(b) The thickness of the coupling flanges is not to be less than the value obtained from the following formula:

$$t_f = d_b\sqrt{\frac{K_f}{K_b}} \qquad \text{mm, not to be less than } 0.9\ d_b$$

where:

t_f = Thickness of coupling flanges, in mm.

d_b = Bolt diameter, in mm, for a number of bolts not exceeding 8.

K_b = Material factor for the bolt as specified in 24.1.2(c).

K_f = Material factor for the flange as specified in 24.1.2(c).

(c) The width of material between the perimeter of the bolt holes and the perimeter of the flange is not to be less than 0.67 d_b.

(d) The welded joint between the rudder stock and the flange is to be made in accordance with Fig. XV 24-6 or equivalent.

(e) Coupling bolts are to be fitted bolts and their nuts are to be locked effectively.

(f) In principle, rudder stock and flange are to be of monoblock construction. However, for ships less than 60 m in length, the rudder stock may be of a welded type where the stock is inserted into the flange and welded with edge preparation.

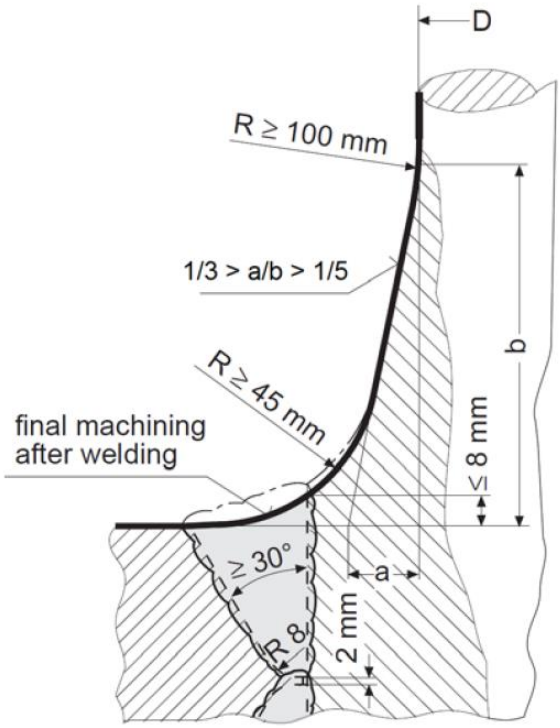

Fig. XV 24-6
Welded Joint between Rudder Stock and Coupling Flange

24.8.2 Vertical flange couplings

(a) Coupling bolts are to be reamer bolts and their diameters are not to be less than the value obtained from the following formula:

$$d_b = 0.81d\sqrt{\frac{K_b}{nK_s}} \quad \text{mm}$$

where:

d = Stock diameter, in mm, taken equal to the greater of the d_{us} or d_{ls} as specified in 24.4.1 and 24.4.2 of this Chapter.

n = Total number of bolts, which is not to be less than 8.

K_b = Material factor for the bolt as specified in 24.1.2(c) of this Chapter.

K_s = Material factor for the stock as specified in 24.1.2(c) of this Chapter.

(b) The first moment of area of the bolts about the center of the coupling, M, is to be not less than the value obtained from the following formula:

$$M = 0.00043d^3 \quad \text{cm}^3$$

(c) The thickness of the coupling flanges must be at least equal to the bolt diameter, and the width of the flange material between the perimeter of the bolt holes and the perimeter of the flange is to be not less than 0.67 d_b.

(d) Coupling bolts are to be fitted bolts and their nuts are to be locked effectively.

24.8.3 Cone couplings with key

(a) Cone couplings without hydraulic arrangements for mounting and dismounting the coupling should have a taper c on diameter of 1:8 ~ 1:12, where:

$c = (d_0 - d_u) / l$ (see Fig. XV 24-7 as below)

The cone coupling is to be secured by a slugging nut. The nut is to be secured, e.g. by a securing plate.

(b) The cone shapes are to fit exactly. The coupling length *l* is to be, in general, not less than $1.5d_0$.

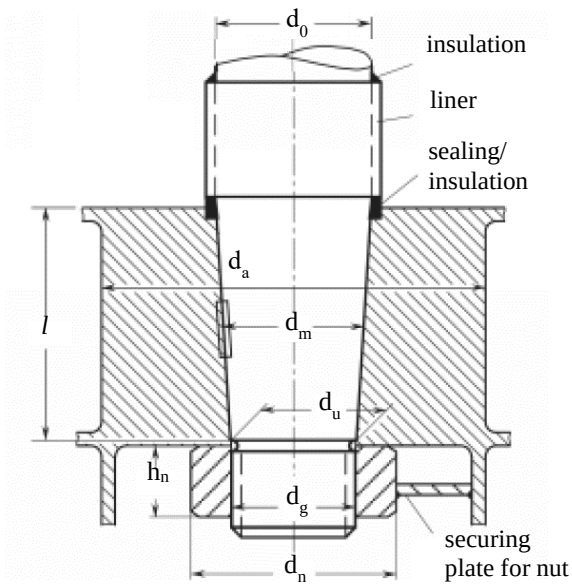

Fig. XV 24-7
Cone Coupling with Key

(c) Dimensions of key

For couplings between stock and rudder a key is to be provided, the shear area of which, in cm^2, is not to be less than:

$$a_s = \frac{17.55Q_F}{d_k \sigma_{F1}}$$

where:

Q_F = Design yield moment of rudder stock, in N-m

σ_{F1} = $0.02664 \cdot d_{us}^3 / K$

Where the actual diameter d_{ua} is greater than the calculated diameter d_{us}, the diameter d_{ua} is to be used. However, d_{ua} applied to the above formula need not be taken greater than 1.145 d_{us}.

d_{us} = Stock diameter, in mm, according to 24.4.1 of this Chapter

K = Material factor for stock as given in 24.1.2(c) of this Chapter.

d_k = Mean diameter of the conical part of the rudder stock, in mm, at the key.

σ_{F1} = Minimum yield stress of the key material, in N/mm^2.

The effective surface area, in cm^2, of the key (without rounded edges) between key and rudder stock or cone coupling is not to be less than:

$$a_k = \frac{5Q_F}{d_k \sigma_{F2}}$$

where:

σ_{F2} = Minimum yield stress of the key, stock or coupling material, in N/mm^2, whichever is less.

(d) Dimensions of the slugging nut

The dimensions of the slugging nut are to be as follows (see Fig. XV 24-7 of this Chapter):

External thread diameter: $d_g \geq 0.65\ d_o$

Height: $h_n \geq 0.6\ d_g$

Outer diameter of nut: $d_n \geq 1.2\ d_u$ or $1.5\ d_g$, whichever is greater.

(e) Push up

It is to be proved that 50% of the design yield moment is solely transmitted by friction in the cone couplings. This can be done by calculating the required push-up pressure and push-up length according to 24.8.4(b) and 24.8.4(c) of this Chapter for a torsional moment $Q'_F = 0.5Q_F$.

(f) Notwithstanding the requirements in 24.8.3(c) and 24.8.3(e) above, where a key is fitted to the coupling between stock and rudder and it is considered that the entire rudder torque is transmitted by the key at the couplings, the scantlings of the key as well as the push-up force and push-up length are to be at the discretion of the Society.

24.8.4 Cone couplings with special arrangements for mounting and dismounting the couplings

(a) Where the stock diameter exceeds 200 mm, the press fit is recommended to be effected by a hydraulic pressure connection. In such cases the cone is to be more slender, c ≈1:12 to ≈1:20.

In case of hydraulic pressure connections the nut is to be effectively secured against the rudder stock or the pintle.

For the safe transmission of the torsional moment by the coupling between rudder stock and rudder body the push-up pressure and the push-up length are to be determined according to 24.8.4(b) and 24.8.4(c) as below respectively.

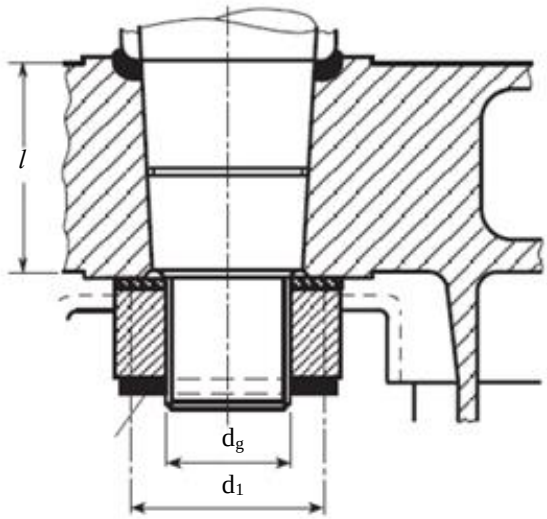

Fig. XV 24-8
Cone Coupling without Key

(b) Push-up pressure

The push-up pressure, is not to be less than the greater of the two following values:

$$p_{req1} = \frac{2Q_F}{d_m^2\, l\, \pi\mu_0} 10^3 \qquad N/mm^2$$

$$p_{req2} = \frac{6M_b}{l^2 d_m} 10^3 \qquad N/mm^2$$

where:

Q_F	=	Design yield moment of rudder stock, as defined in 24.8.3(c) above, in N-m.
d_m	=	Mean cone diameter in mm, see Fig. XV 24-7 of this Chapter.
l	=	Cone length in mm.
μ_0	=	Frictional coefficient, equal to 0.15.
M_b	=	Bending moment in the cone coupling (e.g. in case of spade rudders), in N-m.

It has to be proved by the designer that the push-up pressure does not exceed the permissible surface pressure in the cone. The permissible surface pressure, in N/mm², is to be determined by the following formula:

$$p_{perm} = \frac{0.8R_{eH}\,(1 - a^2)}{\sqrt{3 + a^4}} \qquad N/mm^2$$

where:

R_{eH}	=	Minimum yield stress of the material of the gudgeon in N/mm².
a	=	d_m / d_a
d_m	=	Mean cone diameter in mm, see Fig. XV 24-7 of this Chapter.
d_a	=	Outer diameter of the gudgeon to be not less than $1.5d_m$, see Fig. XV 24-7 of this Chapter.

(c) Push-up length

The push-up length Δl, in mm, Δl is to comply with the following formula:

$\Delta l_1 \leq \Delta l \leq \Delta l_2$

where:

$$\Delta l_1 = \frac{p_{req} d_m}{E\left(\frac{1-a^2}{2}\right)c} + \frac{0.8R_{tm}}{c} \quad \text{mm}$$

$$\Delta l_2 = \frac{1.6R_{eH} d_m}{Ec\sqrt{3+a^4}} + \frac{0.8R_{tm}}{c} \quad \text{mm}$$

R_{tm} = Mean roughness, in mm taken equal to 0.01

c = Taper on diameter according to 24.8.4(a) of this Chapter

E = Young's modulus of the material of the gudgeon, in N/mm^2

d_m, R_{eH}, a, p_{req} = As specified in 24.8.4(b) above.

Notwithstanding the above, the push up length is not to be less than 2 mm.

Note: In case of hydraulic pressure connections the required push-up force P_e, in N, for the cone may be determined by the following formula:

$$P_e = p_{req} d_m \pi l \left(\frac{c}{2} + 0.02\right)$$

The value 0.02 is a reference for the friction coefficient using oil pressure. It varies and depends on the mechanical treatment and roughness of the details to be fixed.

Where due to the fitting procedure a partial push-up effect caused by the rudder weight is given, this may be taken into account when fixing the required push-up length, subject to approval by the Society.

24.9 Pintles

24.9.1 Scantlings

The minimum pintle diameter is to be as follows:

$$d_p = 0.35\sqrt{BK_p} \quad \text{mm}$$

where:

B = The reaction force in bearing, in N.

K_p = Material factor for the pintle as specified in 24.1.2(c) of this Chapter.

24.9.2 Couplings

(a) Tapering

Pintles are to have a conical attachment to the cast part of rudder with a taper on diameter of:

1:8 ~ 1:12 for keyed and other manually assembled pintles applying locking by slugging nut.
1:12 ~ 1:20 for pintles mounted with oil injection and hydraulic nut.

(b) Push-up pressure for pintle bearings

The required push-up pressure p_{req} for pintle bearings, in N/mm^2, is to be determined by the following formula:

$$p_{req} = 0.4\frac{Bd_0}{d_m^2 l}$$

where:

B = As defined in 24.9.1 above.

d_m, l = As defined in 24.8.4(b) above.

d_0 = Pintle diameter, in mm, see Fig. XV 24-7 of this Chapter

The push up length is to be calculated similarly as in 24.8.4(c), using required push-up pressure and properties for the pintle bearing.

(c) The minimum dimensions of the threads and the nuts of pintles are to be determined by applying the requirements in 24.8.3(d) of this Chapter correspondingly.

(d) The taper length of the pintle is not to be less than the maximum actual diameter of the pintle.

(e) Pintles are to be properly protected from corrosion.

24.10 Rudder Stock Bearings, Rudder Shaft Bearing and Pintle Bearings

24.10.1 Liners and bushes

(a) Rudder stock bearing

Liners and bushes are to be fitted in way of bearings. The minimum thickness of liners and bushes is to be equal to:

t_{min} = 8 mm for metallic materials and synthetic material

= 22 mm for lignum material

(b) Pintle bearing

The thickness of any liner or bush, in mm, is neither to be less than:

$$t = 0.01\sqrt{B}$$

where:

B = relevant bearing force, in N.

nor than the minimum thickness defined in 24.9.1.

24.10.2 Bearing surface

(a) The bearing surface, A_b, defined as the projected area: length × outside diameter of sleeve, is not to be less than the value obtained from the following formula:

$$A_b = \frac{B}{q_a} \quad \text{mm}^2$$

where:

B = Reaction force, in N as specified in 24.9.1 above.

q_a = Allowable surface pressure as listed in Table XV 24-3 as below.

Table XV 24-3
Allowable Surface Pressure, q_a

Bearing material	q_a (N/mm^2)
Lignum-vitae	2.5
White metal, oil lubricated	4.5
Synthetic material with hardness between 60 and 70 Shore D(1)	5.5(2)
Steel(3) and bronze and hot-pressed bronze-graphite materials	7.0

Notes:

(1) Indentation hardness test at 23°C and 50% moisture, according to a recognized standard. Synthetic bearing materials are to be of an approved type.

(2) Surface pressures exceeding 5.5 N/mm^2 may be accepted in accordance with bearing manufacturer's specification and tests, but in no case more than 10 N/mm^2.

(3) Stainless and wear-resistant steel in an approved combination with stock liner. Higher values than given in the Table may be taken if they are verified by tests.

24.10.3 Bearing dimension

The bearing length is to be such that length/diameter ratio of the bearing surface is neither less than 1.0 nor greater than 1.2.

24.10.4 Bearings clearance

(a) Metal bearings' clearances are not to be less than $d_b/1000+1$ (mm) on the diameter. Where d_b means internal diameter of bush, in mm.

(b) If non-metallic bearing material is applied, the bearing clearance is to be specially determined considering the material's swelling and thermal expansion properties. This clearance is not to be taken less than 1.5 (mm) on bearing diameter unless a smaller clearance is supported by the manufacturer's recommendation and there is documented evidence of satisfactory service history with a reduced clearance.

24.11 Steering Nozzles

24.11.1 Application Scope

(a) Requirements in this section are applicable to conventional steering nozzles, as illustrated in Fig. XV 24-9, with the following restrictions:

(i) The inner diameter of 5 meters or less, and

(ii) The operating angle ranging not more than - 35° to + 35° port and starboard

(b) Steering nozzles outside of the application scope are subject to special consideration with all supporting documents and calculations submitted to the Society for review. The submitted documents and calculations are to include, but not limited to, the items listed in the following:

(i) The drawings and plans of steering nozzle with indications of design operating angles and the torque considered necessary to operate the steering nozzle at the design operating angle

(ii) The calculated steering nozzle section modulus

(iii) The calculated maximum water induced pressure of the nozzle under design speed (both ahead and astern conditions) and at the design operating angle, and

(iv) The calculated maximum shear and bending of nozzle support structure under design speed (both ahead and astern conditions) and at the design operating angle

24.11.2 Design Force

The design force, F, for steering nozzles is to be obtained from the following equation:

$$F = 132\, K_1\, K_2\, K_3\, A_t V^2 = F_1 + F_2 \quad \text{N}$$

$$F_1 = 132\, K_1\, K_2\, K_3\, A_{eq} V^2 \quad \text{N}$$

$F_2 = 132\ K_1\ K_2\ K_3\ (A_{po}+A_{mf})V^2$ N

where:

F_1	=	Design force associated with the turning movement of the nozzle	
F_2	=	Design force associated with the turning movement of nozzle post, movable flap, if present	
K_1	=	Factor depending on the aspect ratio λ of the rudder area.	
	=	$\frac{1}{3}(\lambda + 2)$ but not taken more than 2	
		where $\lambda = \frac{d_m{}^2}{A_t}$	
d_m	=	Mean external diameter of the nozzle	m
	=	$0.5(d_f + d_a)$	
d_f , d_a	=	Fore and aft nozzle external diameters as shown in Fig. XV 24-9 of this Chapter	m
A_t	=	$A_{eq}+A_{po}+A_{mf}$	m^2
A_{eq}	=	Nominal projected area of nozzle cylinder, not to be taken less than 1.35 d_m b	
b	=	Nozzle length	m
A_{po}	=	Projected area of nozzle post or horn within the extension of nozzle profile as applicable	
A_{mf}	=	Projected area of movable flap if present	
	=	$d_a \times b_{mf}$	
A	=	$A_{eq}+ A_{mf}$	m^2
K_2	=	1.9 for ahead condition	
	=	1.5 for astern condition	
K_3	=	1.15 as specified in 24.2.1 of this Chapter	
V	=	As defined in 24.2.1. of this Chapter	

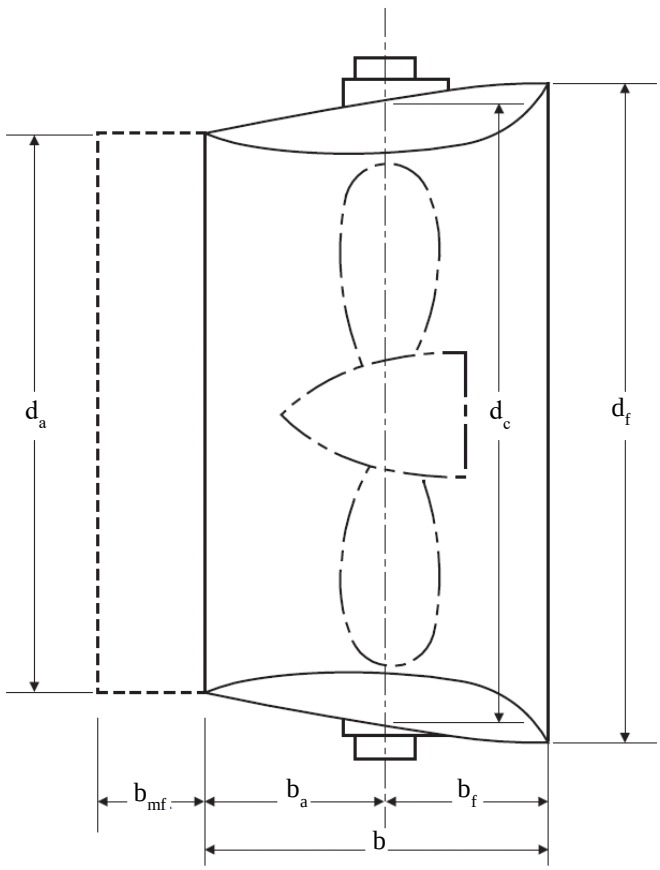

Fig. XV 24-9
Nozzle Geometry

24.11.3 Design torque

Design torque, Q, for steering nozzle is to be determined from the following equation for both ahead and astern conditions:

$Q = F \times r$ N-m

where:

Q	=	Rudder torque	N-m
r	=	l (α–k), but not less than 0.1l for ahead condition	m
l	=	b, without flap	m
	=	$b + b_{mf}$, if flap present	

α = as the table below:

Rudder Position or High-Lift	α		
	Ahead Condition	Astern Condition	
Located behind a fixed structure, such as a rudder horn	0.25	0.55	
Located where no fixed structure forward of it	0.33	0.75 (hollow profile)	0.66 (non-hollow)
High-Lift Rudders(See Table XV 24-1)	Special consideration (0.40 if unknown)	Special consideration	

k = Balance factor.

$= \frac{A_f}{A}$

$A_f = \frac{A_{eq} b_f}{l}$ m^2

A, F = As specified in 24.11.2 above.

d_c = nozzle diameter at the section intersecting with nozzle stock axis;

24.11.4 Nozzle stock

(a) Upper Stock

The upper stock is that part of the nozzle stock above the neck bearing.

At the upper bearing or tiller, the upper stock diameter is not to be less than obtained from the following equation:

$$d_{us} = 4.2\sqrt[3]{QK} \quad \text{mm}$$

where:

Q = As defined in 24.11.3 above.

K = Material factor as specified in 24.1.2(c) of this Chapter

(b) Lower stock

In determining lower stock diameters, values of nozzle design force and torque calculated in 24.11.2 and 24.11.3 of this Chapter are to be used. Bending moments and shear forces, as well as the reaction forces are to be determined by direct calculation and are to be submitted for review. For nozzles supported by shoe pieces, these structures are to be included in the calculation. Calculation for these values is to be referred to 24.3 above.

The lower nozzle stock diameter is not to be less than obtained from the following equation:

$$d_{ls} = d_{us}\sqrt[6]{\left(1+\frac{4}{3}\left(\frac{M}{Q}\right)^2\right)}$$

where:

d_{ls}	=	Lower stock diameter	mm
d_{us}	=	Upper rudder stock diameter, in mm, as given in 24.4.1 above.	mm
M	=	Bending moment at the cross section of the nozzle stock considered	N-m
Q	=	As specified in 24.11.3 above.	

24.11.5 Design pressure

The design pressure of the nozzle is to be obtained from the following:

$p = p_d + p_s$ N/mm^2

where:

$p_s = c_s c_m \frac{F_1}{2A_{eq}}$

c_s = 0.001

c_m = As indicated in Table XV 24-4 of this Chapter.

F_1, A_{eq} = As defined in 24.11.2 of this Chapter.

$p_d = 10^{-6} c\varepsilon \left(\frac{N}{A_p}\right)$ N/mm^2

where

c	=	As indicated in Table XV 24-4 of this Chapter
ε	=	$21-0.02\left(\frac{N}{A_p}\right)$ but not to be taken less than 10
N	=	Maximum shaft power
A_p	=	Propeller disc area: $\pi D^2/4$
D	=	Propeller diameter

Table XV 24-4
Coefficient c_m

Propeller Zone (see Fig. XV 24-10)	c_m	c
2	0.35	10
1 and 3	0.5	5
4	1.0	3.5

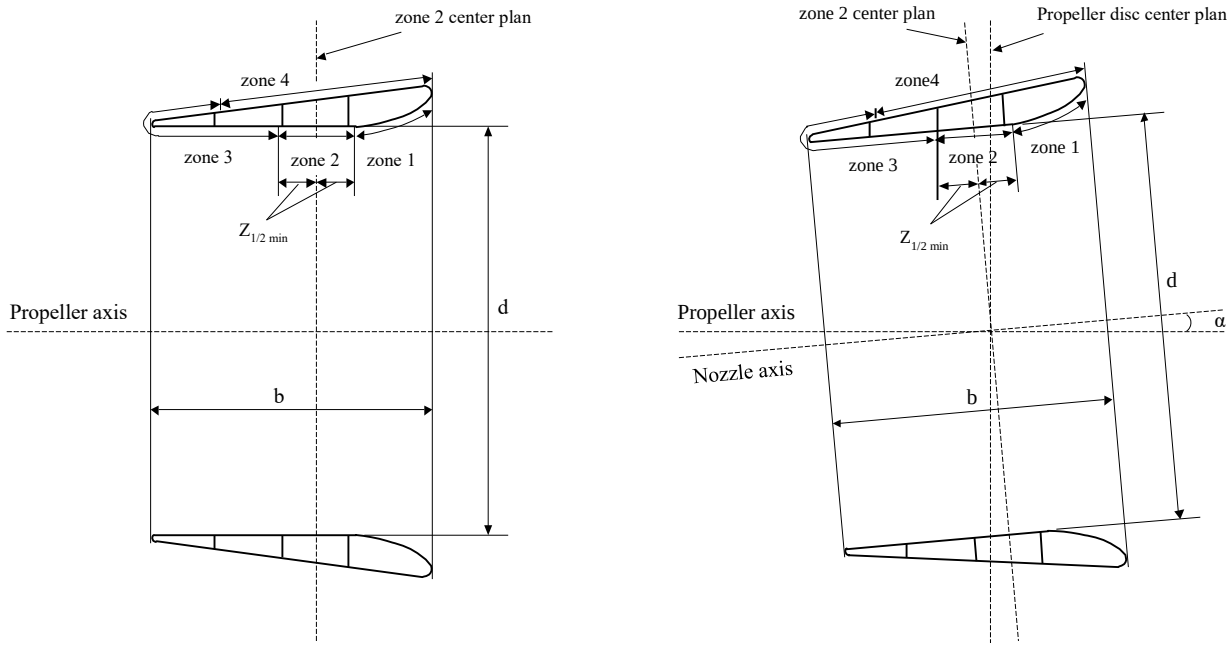

Fig. XV 24-10
Propeller Nozzle Section View

24.11.6 Plate thickness

(a) Nozzle shell

The thickness of the nozzle shell plating, in mm, is not to be less than:

$t = t_o + t_c$ mm

but not to be taken less than 7.5 mm

where:

t_o = Thickness obtained from the following formula: mm

$c_n \cdot S_p \cdot \sqrt{pK_n}$

c_n = 0.158

S_p = Spacing of ring webs mm

p = Design pressure, as defined in 24.11.5 of this Chapter N/mm^2

t_c = Corrosion allowance mm

= 1.5, for $t_o \leq 10$

= The lesser of b_1, b_2, for $t_o > 10$

b_1 = 3.0 mm

b_2 = $\left(\frac{t_o}{\sqrt{K_n}} + 5\right) \times 10^{-1}$ mm

K_n = Nozzle material factor as defined in 24.1.2(c) of this Chapter

(b) Internal diaphragm

Thickness of nozzle internal ring web is not to be less than the required nozzle shell plating for Zone 3 as illustrated in Fig. XV 24-10 of this Chapter.

(c) Movable flap

Nozzle movable flap plate thickness, if present, is to comply with the following:

(i) For double-plate movable flap, requirements in 24.5.1 of this Chapter are to be satisfied as applicable.

(ii) For single-plate movable flap, requirements in 24.7 of this Chapter are to be satisfied as applicable.

24.11.7 Section modulus

Steering nozzle is to have section modulus not less than:

$SM = d^2bV^2Q$ cm^3

where:

d	=	Nozzle inner diameter	m
b	=	Nozzle length	m
V	=	Design speed in ahead condition	knots
Q	=	Reduction factor conditional on material type	
	=	1.0 for mild steel	
	=	0.78 for H32 strength steel	
	=	0.72 for H36 strength steel	
	=	0.68 for H40 strength steel	

24.11.8 Locking device

A mechanical locking device is to be provided:

(a) To prevent the steering nozzle from rotating beyond the maximum operating angle at design speed

(b) To prevent steering nozzle from rotating toward undesired directions in the event of accident or damage

24.12 Azimuthal Thruster

24.12.1 Plans and documents

The following plans and documents are to be submitted to the Society as applicable:

(a) Overall arrangement of the thruster unit

(b) Detailed nozzle drawing with nozzle profile type indicated

(c) Detailed plans of thruster connection, bolted or welded, to the hull

(d) Nozzle strut drawings including details of the connections to the propeller gear housing and the nozzle duct

(e) Material list and properties of all structure components

(f) Manufacturer specified/calculated maximum load on the unit for crash stop condition

Note: For specific requirements of machinery components, see Part II, Part IV, Part VI, etc. of the Rules as applicable

24.12.2 Application scope

(a) Requirements in this section are applicable to Azimuthal Thrusters (also referred as integrated nozzle propellers), as illustrated in Fig. XV 24-11 of this Chapter, with the following restrictions:
   (i) The inner diameter of thruster's nozzle is of 5 meters or less
   (ii) Azimuthal thrusters designed for propulsion and maneuvering

(b) Special Review
   Azimuthal thrusters outside of the above application scope are subject to special consideration with all supporting documents and calculations submitted to the Society for review.
   The submitted documents and calculations include, but are not limited to, the following items:
   (i) The drawings and plans of the thruster with indications of design operating angles and the torque considered necessary to operate the thruster at the design operating angle
   (ii) The calculated thruster section modulus
   (iii) The calculated maximum water induced pressure of the thruster under design speed (both ahead and astern conditions) and at the design operating angle, and
   (iv) The calculated maximum shear and bending of thruster support structure under design speed (both ahead and astern conditions) and at the design operating angle

24.12.3 Locking device
A locking device is to be provided to prevent the azimuthal thruster from rotating toward undesired directions in the event of accident or damage.

24.12.4 Design force
The design force, F, for azimuthal thrusters is the maximum load for crash stop condition or as obtained from the following equation, whichever is greater:

$F = 132\, K_1 K_2 K_3 A V^2$ N
$= F_1 + F_2$
$F_1 = 132\, K_1 K_2 K_3 A_{eq} V^2$
$F_2 = 132\, K_1 K_2 K_3 A_{tb} V^2$

where:

F_1 = Design force associated with the turning movement of the thruster nozzle

F_2 = Design force associated with the turning movement of other component of the thruster

Where:

K_1 = Factor depending on the aspect ratio λ of the rudder area.

$= \frac{1}{3}(\lambda + 2)$ where $\lambda = \frac{d_m{}^2}{A}, \lambda \leq 2$

d_m = Mean external diameter of the nozzle m

$= 0.5(d_f + d_a)$

d_f, d_a = Fore and aft nozzle external diameter as shown in Fig. XV 24-11 of this Chapter m

b = Nozzle length as shown in Fig. XV 24-11(a) of this Chapter m

A = $A_{eq} + A_{tb}$ m^2

A_{eq} = Nominal projected area of nozzle cylinder, not to be taken less than $1.35\, d_m \times b$.

A_{tb} = Effective projected areas of the azimuthal thruster components forward of the nozzle* m^2

d_o = Outer diameter of steering tube as shown in Fig. XV 24-11(a) of this Chapter m

K_2 = 1.9 for ahead condition

= 1.5 for astern condition

K_3 = 1.15, as specified in 24.2.1 of this Chapter

V = As defined in 24.2.1. of this Chapter

Note: Effective projected areas forward of the azimuthal thruster nozzle are the parts that actually contribute to generate lift force as the thruster turns. For example a torpedo shaped component, the projected profile area is to be proportionally reduced in order to be taken as the effective projected area. If this resultant effective projected area is too small to compare with the overall effective projected area, it may be discounted.

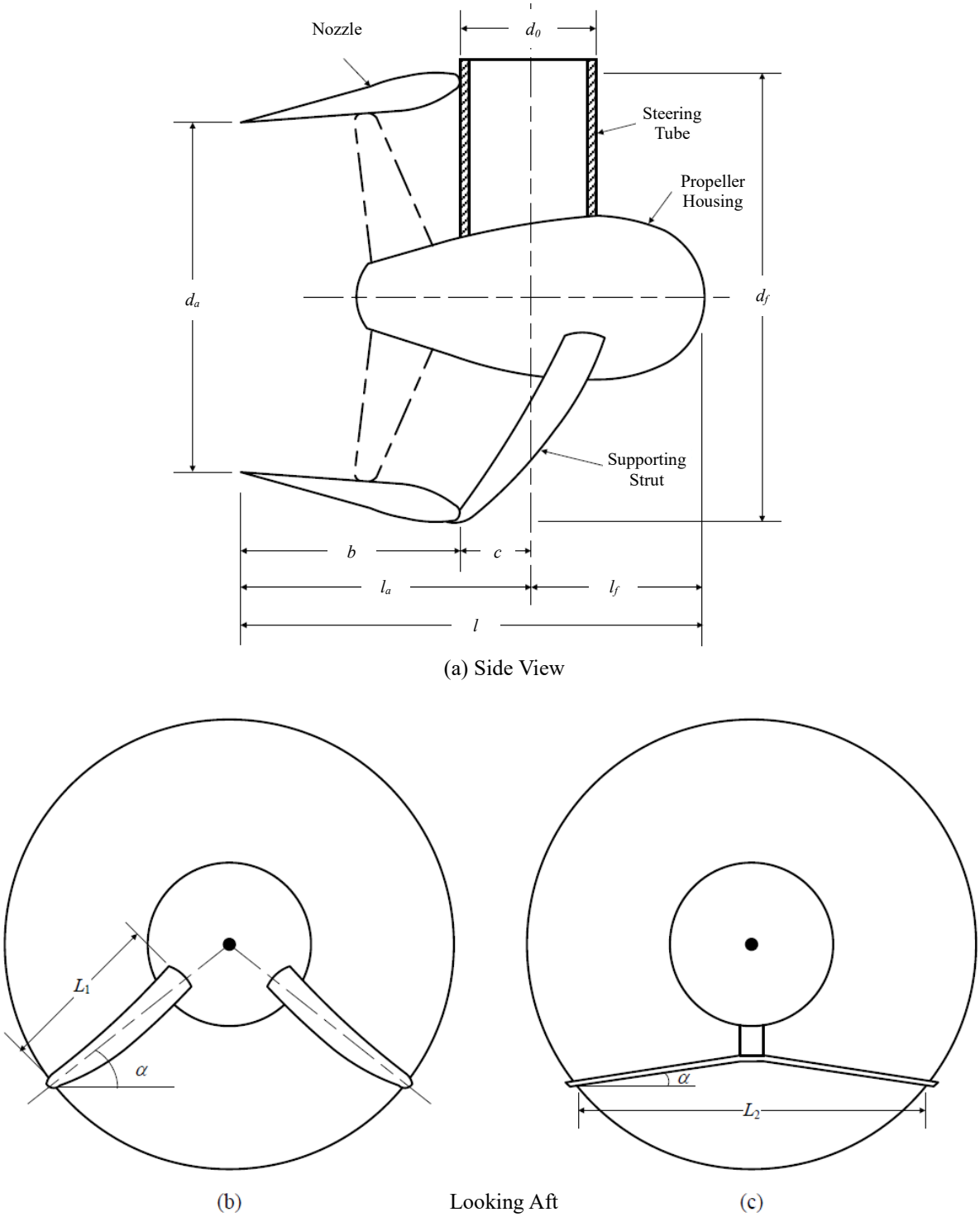

Fig. XV 24-11
An Illustration of Azimuthal Thruster

24.12.5 Design torque

Design torque, Q, for azimuthal thruster is to be determined from the following equation for both ahead and astern conditions:

Q = F × r N-m

where:

Q = Rudder torque N-m

r	=	l (α–k), but not less than 0.1l for ahead condition	m
l	=	length of azimuthal thruster	m
α	=	as specified in 24.11.3 above	
k	=	Balance factor.	
	=	$\frac{A_f}{A}$	
A_f	=	Effective projected area of azimuthal thrust unit forward of steering centerline (within the extent length of l_f), not to be taken less than 0.5 A_{tb}	m^2
A, F	=	As specified in 24.12.4 above.	

24.12.6 Design pressure

The design pressure of the nozzle is to be obtained from the following:

$p = p_d + p_s$ N/mm^2

where:

p_s	=	$c_s c_m \times \frac{F_1}{2A_{eq}}$
p_d, c_s, c_m	=	As defined in 24.11.5 of this Chapter
F_1, A_{eq}	=	As defined in 24.12.4 of this Chapter

24.12.7 Nozzle scantlings

(a) Nozzle shell

The thickness of the nozzle shell plating, in mm, is not to be less than the following:

$t = (t_o + t_c)\sqrt{K_n}$ N/mm^2

but not to be taken less than 7.5 mm

where:

t_o	=	$c_n S_p \sqrt{p}$
c_n	=	0.158
S_p	=	Nozzle ring web spacing, in mm
p	=	Design pressure as defined in 24.12.6 of this Chapter
t_c	=	Corrosion allowance
	=	1.5, for $t_o \leq 10$
	=	The lesser of b_1, b_2 for $t_o > 10$
		b_1 = 3.0 mm
		b_2 = $\left(\frac{t_o}{\sqrt{K_n}} + 5\right) \times 10^{-1}$ mm

(b) Internal diaphragm

Thickness of nozzle internal ring webs and diaphragms are not to be less than the required nozzle shell plating for Zone 3 (see Table XV 24-4 of this Chapter and t_c as specified in 24.12.7(a) above for reference).

24.12.8 Steering tube

The steering tube of the azimuthal thruster is to have scantlings of at least the same strength against bending moment and shear force as an equivalent stock with diameter calculated in accordance with 24.1.5 and 24.4.

where

Q is replaced by the design torque as defined in 24.12.5 of this Chapter.

K is replaced by material factor of the steering tube.
M is the bending moment calculated at the section of the steering tube under consideration.

24.12.9 Section modulus
Section modulus of azimuthal thruster nozzles is to be not less than:

$$SM = 1.1\, d^2 b V^2 Q \qquad cm^3$$

where:

d	=	Nozzle inner diameter	m
b	=	Nozzle length	m
V	=	Design speed in ahead condition	knots
Q	=	Reduction factor conditional on material type	
	=	1.0 for mild steel	
	=	0.78 for H32 strength steel	
	=	0.72 for H36 strength steel	
	=	0.68 for H40 strength steel	

24.12.10 Thruster Nozzle Top Connections
The structure where nozzle top and the steering tube are connected is to comply with the following requirements as the case may be.

(a) Welded Connection
Refer to 24.12.13 of this Chapter.

(b) Bolted Connection
The following are to be complied with:
(i) Flange couplings are to be supported by an ample bodies of metal worked out from both sides, which provide the structural continuity to bear the anticipated loads. In certain cases, stress analysis may be required to verify that the stress level within the flanges is not greater than 80% of the yield strength.
(ii) Flange thickness is to be comply with 24.8.1(b) or 24.8.2(c) of this Chapter, as applicable.
(iii) The coupling bolts are to be of fitted bolts and meet the scantling requirements specified in 24.8.1(a) or 24.8.2(a) of this Chapter, as applicable.
(iv) Effective means are to be fitted for locking the nuts in place.
(v) The smallest distance from the edge of the bolt holes to the edge of the flange is not to be less than 2/3 of the bolt diameter.

24.12.11 Nozzle Strut

(a) General
(i) Structural transitions of strut connected to nozzle and propeller housing are to avoid abrupt changes and the fillet radius is not to be less than 75 mm unless the stress in the radius area is verified to be acceptable by direct analysis.
(ii) The width and thickness of strut plating are to have a gradual transition for smooth load carrying.
(iii) Material properties of the nozzle strut and the structure components it is in direct contact are to be compatible (Material properties of dissimilar parts and components in direct contact with each other are to be submitted for review of compatibilities, such as galvanic potential).

(b) Plate Thickness
The minimum plate thickness of the strut is not to be less than obtained from the following:

$$t = \sqrt{\frac{3F_{eqv} \cdot L_{eqv}}{2b_{avg} \cdot \sigma_F}} \qquad \text{mm}$$

but not to be taken less than 7.5 mm

where:

F_{eqv} = equivalent load perpendicular to strut applied at ½ L_{eqv}, in kN

= pA_{strut}, where α is greater than 15° as shown in Fig. XV 24-11(b) of this Chapter

= W_p weight of transmission shaft, gear, and bearings, in kN, where α is less than or equal to 15° as shown in Fig. XV 24-11(c) of this Chapter

A_{strut} = equivalent area of nozzle supporting strut, in m^2

= L_1 b_{avg}, as shown in Fig. XV 24-11(b) of this Chapter

= L_2 b_{avg}, as shown in Fig. XV 24-11(c) of this Chapter

L_{eqv} = equivalent length of nozzle supporting strut, in m

= L_1, as shown in Fig. XV 24-11(b) of this Chapter

= L_2, as shown in Fig. XV 24-11(c) of this Chapter

b_{avg} = average width of nozzle strut plate, in m

σ_F = minimum yield stress of the local material, in N/mm^2

p is as defined in 24.12.6 of this Chapter

24.12.12 Direct Analysis

Direct calculations may be accepted in lieu of applying prescriptive formulas presented in 24.12.4 to 24.12.11 of this Chapter, provided that the following are complied with and satisfied:

(a) Additional Information to Submit

Where the design is based on direct calculations such as FEM, the full analysis is to be submitted for review including:

(i) Software used;

(ii) FE model;

(iii) Loading conditions and load cases including but not limited to normal, heavy duty, and crash stop;

(iv) Applied loads and boundary conditions;

(v) Stress and deflection results, and

(vi) Any other data and information associated with the analysis.

(b) Acceptance Criteria

The results of analysis verify the following:

(i) The maximum nominal stress is not exceed 50% of the yield strength. For the crash stop load case, the maximum local stress in the nozzle and its connection is not to exceed 80% of the yield strength;

(ii) The relative radial displacement, s_{rel} , between nozzle inner shell and propeller tip is not to exceed the following:

$$s_{rel} = 0.1 s_{cl} \qquad \text{mm}$$

where:

s_{cl} = design clearance (the smallest distance) between nozzle inner shell and propeller tip without any loads applied

24.12.13 Welding and Non-destructive Testing (NDT)

Welding on azimuthal thruster is to be in accordance with the requirements of welding for hull construction as specified in Part XII of the Rules as applicable.The required extent of NDT is to be indicated on the drawings and plans. NDT is to be performed in accordance with the requirements for non-destructive inspection of hull welds as specified in Part XII of the Rules where applicable and any additional requirements specified by the manufacturer.

(a) Nozzle Welding

(i) The inner and outer nozzle shell plating is to be welded to the internal stiffening ring webs with double continuous welds as far as practicable. Plug/slot welding is prohibited for the inner shell, but may be acceptable for the outer shell plating, provided that the nozzle ring web spacing is not greater than 350 mm.

(ii) Volumetric and surface examination are to be performed on weldments of the inner and outer shell plating, as well as the internal ring web welds as appropriate.

(b) Connection Welding

Where the connections between nozzle and the hull/steering tube, strut and nozzle/propeller housing are welded (see Fig. XV 24-11 and Fig. XV 24-12 of this Chapter), the following requirements are to be complied with:

(i) Scantlings of the welded connection and welding type/size are to be specially considered and detailed stress analysis may be required to be submitted.

(ii) Welding at the portion of the thruster assembly that penetrates the hull is to be of full penetration and in accordance with the requirement of welding for hull construction as specified in Part XII of the Rules, as applicable.

(ii) Volumetric or surface examination is to be performed on the welds of brackets and the shell penetration.

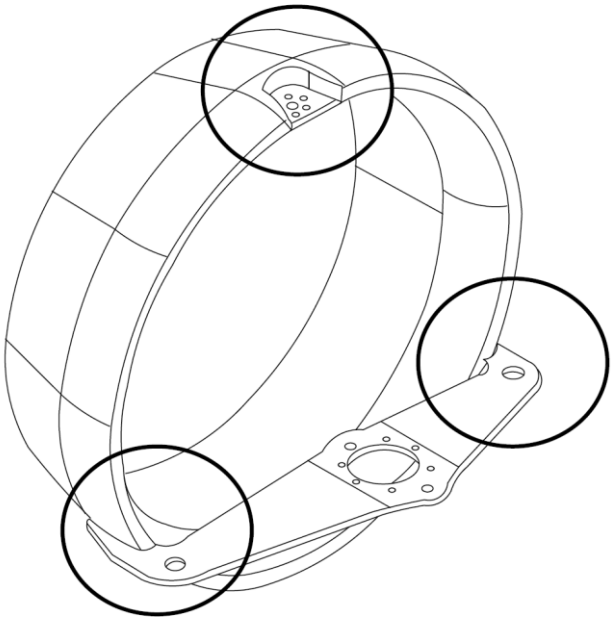

Fig. XV 24-12

Chapter 25
Equipment

25.1 General

25.1.1 All ships, according to their equipment numbers, are to be provided with anchors, chain cables, ropes, etc. which are not less than that given in Table XV 25-1 of this Chapter. The letter **E** will be placed after the symbol of classification of hull in the Register Book.

25.1.2 Anchors, chain cables, ropes, etc. for ships having equipment numbers not more than 50 or more than 1670 are to be determined by the Society.

25.1.3 Two of the anchors given in Table XV 25-1 of this Chapter are to be connected to their cables and be positioned on board ready for use.

25.1.4 Anchors, chain cables, wire ropes and fibre ropes are to be in compliance with the requirements in Chapter 25, Part II.

25.1.5 All ships are to be provided with suitable appliances for handling anchors.

25.1.6 The inboard end of the chain cable is to be secured to the hull through a strong eye plate by means of a shackle or by other equivalent means.

25.2 Equipment Number

25.2.1 The equipment given in Table XV 25-1 is based on the "Equipment Number", EN, which is to be calculated as follows:

$$EN = \Delta^{\frac{2}{3}} + 2BH + 0.1A$$

where:

Δ	=	Molded displacement to the summer load waterline, in ton.
B	=	Breadth of ship, in m, as specified in 1.5.3 of this Part.
H and A	=	Values specified in the following (a), (b) and (c)

(a) H is the value obtained from the following formula:

$$H = a + H'$$

where:

a	=	Vertical distance amidships from the designed maximum load line to the top of uppermost continuous deck beam at side, in m.
H'	=	Height, in m, from the uppermost continuous deck to the top of uppermost superstructures or deckhouses having a breadth greater than 0.25B.

In calculation of H', sheer and trim may be neglected. Where a deckhouse having a breadth greater than 0.25B is located above a deckhouse with a breadth of 0.25B or less, the narrow deckhouse may be ignored.

(b) A is the value obtained from the following formula:

$$A = aL + \Sigma H''l$$

where:

a	=	Value specified in (a) above.
L	=	Length of ship specified in 1.5.1 of this Part.
$\Sigma H''l$	=	Sum of products of the height H", in m and length *l*, in m of superstructures, deckhouses or trunks which are located above the uppermost continuous deck within L and also have a breadth greater than B/4 and a height greater than 1.5 m.

(c) In the application of (a) and (b), screens and bulwarks more than 1.5 m in height are to be regarded as parts of superstructure or deckhouse.

25.2.2 Equipment for tug

For tugs, the term 2BH specified in 25.2.1 above for calculating "Equipment Number", EN, is to be substituted by the following formula:

$$2\,(a\,B + \Sigma\,H''\,b)$$

where:

a	=	As specified in the 25.2.1(a) above.
$\Sigma H''\,b$	=	Sum of the products of the height H", in m and the breadth b, in m of each widest superstructure and deckhouse which have a breadth greater than B/4 and are located above the uppermost continuous deck.

25.3 Anchors

25.3.1 The mass of each anchors may vary by 7% of the mass given in Table XV 25-1 of this Chapter, provided that the total mass of anchors is not less than that obtained from multiplying the mass per anchor given in the Table by the number installed on board. However, where approval by the Society is obtained, anchors which are increased in mass by more than 7% may be used.

25.3.2 Where the stocked anchor is used, the mass excluding the stock is not to be less than 80% of the mass shown in table for ordinary stockless anchors.

25.3.3 Where high loading power anchors are used, the mass of each anchor may be 75% of the mass shown in the table for ordinary stockless anchors.

25.3.4 Where super high holding power anchors are used, the mass of each anchor may be 50% of the mass required for ordinary stockless anchors. However, super high holding power anchor mass is not to exceed 1,500kg.

25.4 Chain Cables

25.4.1 Chain cables for anchors are to be stud link chains of Grades E1, E2 or E3, specified in 13.1.3 of Part XI. In the case of superior holding ability anchor, the Grade E1 chain is not to be used.

25.4.2 Wire rope may be used in place of chain cable for bower anchors on ships with less than 40 m in length and subject to the following conditions:

(a) The length of the wire rope is to be equal to 1.5 times the corresponding tabular length of chain cable (column 6 of Table XV 25-1) and their strength is to be equal to that of tabular chain cable of Grade E1 (Chatper 13 Part XI, Table 13-3).

(b) A short length of chain cable is to be fitted between the wire rope and anchor having a length of 12.5 m or the distance between anchor in stowed position and winch, whichever is less.

(c) All surfaces being in contact with the wire need to be rounded with a radius of not less than 10 times the wire rope diameter (including stem).

25.5 Towlines and Mooring Ropes

25.5.1 As for wire ropes and hemp ropes used as towlines and mooring ropes, the breaking test load specified in Chapter 14 or 15 of Part XI is not to be less than the breaking strength given in Table XV 25-1 of this Chapter, respectively.

25.5.2 For ships having an A/EN ratio greater than 0.9, the number of mooring ropes given in Table XV 25-1 of this Chapter is to be increased by the number given below:

A/EN Ratio	Increase No. of Mooring Rope
1.1 ≥ A/EN > 0.9	1
1.2 ≥ A/EN > 1.1	2
A/EN > 1.2	3

where:
A = The profile area defined in 25.2 of this Chapter.
EN = Equipment number determined by 25.2 of this Chapter.

25.5.3 Application of synthetic fibre ropes for towlines or mooring ropes is to be as deemed appropriate by the Society.

25.5.4 For mooring rope connected with power winches where the rope is stored on the drum, steel cored wire ropes of suitable flexible construction may be used instead of fibre cored wire ropes subject to the approval by the Society.

25.5.5 The length of the individual mooring rope may be reduced by up to 7% of the lengths given in Table XV 25-1 of this Chapter, provided that the total length of the mooring rope is not less than that obtained from multiplying the length by the number given in Table XV 25-1 of this Chapter.

25.6 Chain Lockers

25.6.1 Chain lockers and chain pipes are to be watertight up to the weather deck and to be provided with means of drainage.

25.6.2 Chain lockers are to be subdivided by centre line screen walls.

25.6.3 Where a means of access is provided, it is to be closed by a substantial cover and secured by closely spaced bolts. The chain locker is to have provisions for securing the inboard ends of the cable to the structure.

25.6.4 Where a means of access to chain pipes or cable lockers is located below the weather deck, the access cover and its securing arrangements are to be to the satisfaction of. Butterfly nuts and/or hinged bolts are prohibited as the securing mechanism for the access cover.

25.6.5 Chain pipes through which Chain Cables are led are to be provided with permanently attached closing appliances to minimize water ingress.

25.7 Emergency Towing Procedures

25.7.1 Ships of not less than 500 gross tonnage are to be provided with an emergency towing procedure that describes the towing procedure to be used in emergency situation.

25.7.2 The procedure specified in 25.7.1 above is to be based on existing arrangements and equipment available on board the ship and is to include the following information:

(a) drawings of fore and aft deck showing possible emergency towing arrangements;

(b) inventory of equipment on board that can be used for emergency towing;

(c) means and methods of communication; and

(d) sample procedures to facilitate the preparation for and conducting of emergency towing operations.

25.8 Towing and Mooring Fittings

25.8.1 General

(a) The requirements in this Section apply to ships of not less than 500 gross tonnage. The requirements in this section apply to shipboard fittings used for normal towing (hereinafter referred to as "towing fittings") and normal mooring (hereinafter referred to as "mooring fittings"), and their supporting hull structures (hereinafter referred to as "supporting structures").

(b) Ships are to be adequately provided with towing and mooring fittings.

(c) The scantlings of supporting structures are to be built at least with the gross scantlings obtained by adding the corrosion addition specified in 25.8.2(e) and 25.8.3(e) to the net scantlings obtained by applying the criteria specified in this section.

(d) The scantlings of supporting structures are to be in accordance with the relevant chapters or sections in addition to this section.

25.8.2 Towing fittings

(a) Arrangement of towing fittings

(i) Towing fittings are to be located on longitudinals, beams or girders, which are parts of the deck construction so as to facilitate efficient distribution of the towing load.

(ii) When towing fittings cannot be located as specified in 25.8.2(a)(i) above, towing fittings are to be arranged on reinforced members.

(b) Design load

Design load, see Fig. XV 25-1 of this Chapter, for towing fittings and their supporting structures (hereinafter referred to as "design load on fittings" (see Fig. XV 25-1 of this Chapter) in this paragraph) are to be as specified in 25.8.2(b)(i) to 25.8.2(b)(vi) below:

(i) For normal towing operations (e.g. harbour / manoeuvring), the design load on the line (see Fig. XV 25-1 of this Chapter) is to be 1.25 times the intended maximum towing load.

(ii) For other types of towing (e.g. escort), the design load on the line (see Fig. XV 25-1 of this Chapter) is to be the breaking strength of the towing line specified in Table XV 25-1 of this Chapter according to the equipment number determined in 25.2 of this Chapter.

(iii) The design load on fittings is to take into account all acting loads.

(iv) The point where the towing force acts on towing fittings is to be taken as the attachment point of the towing line.

(v) The design load on fittings is to take into account the total design load on the line specified in 25.8.2(b)(i) and 25.8.2(b)(ii) above, but need not exceed twice the design load on the line.

(vi) If the design load on fittings specified in 25.8.2(b)(ii) to 25.8.2(b)(v) above is less than the intended towing load stipulated in the construction specifications for the towing fittings and their supporting structures used for towing operations specified in 25.8.2(b)(ii) above, the design load on fittings is to be not less than the intended towing load.

(c) Selection of towing fittings

Towing fittings are generally to be specified according to standards approved by the Society.

(d) Allowable stresses of supporting structures

Allowable stresses of supporting structures are not to be more than below:

(i) Normal stress: 100% of the specified yield point for the material used

(ii) Shearing stress: 60% of the specified yield point for the material used

(e) Corrosion addition of supporting structures

For the corrosion addition of supporting structures, the value will be considered by the Society, but is not to be less than 2 mm.

(f) Safe working load (SWL)

(i) For towing fittings and their supporting structures used for towing operations specified in 25.8.2(b)(i) above, the SWL is not to exceed 80% of the design load on fittings specified in 25.8.2(b)(i), 25.8.2(b)(iii), 25.8.2(b)(iv) and 25.8.2(b)(v) above.

(ii) For towing fittings and their supporting structures used for towing operations specified in 25.8.2(b)(ii) above, the SWL is not to exceed the design load on fittings specified in 25.8.2(b)(ii) to 25.8.2(b)(vi) above.

(iii) For towing fittings and their supporting structures used for towing operations specified in both 25.8.2(b)(i) and 25.8.2(b)(ii) above, the SWL is not to exceed the greater of the design loads.

(iv) The SWL of each fitting is to be marked by weld beads or equivalent on the fitting.

25.8.3 Mooring fittings

(a) Arrangement of mooring fittings

(i) Mooring fittings are to be located on longitudinals, beams or girders, which are parts of the deck construction so as to facilitate efficient distribution of the mooring load.

(ii) When mooring fittings cannot be located as specified in 25.8.3(a)(i) above, the mooring fittings are to be arranged on reinforced members.

(b) Design load

Design load for mooring fittings and their supporting structures (hereinafter referred to as "designed load on fittings"(see Fig. XV 25-1 of this Chapter) in this paragraph) are to be as specified in 25.8.3(b)(i) to 25.8.3(b)(vii) below:

(i) The design load on the line (see Fig. XV 25-1 of this Chapter) is to be 1.25 times the breaking strength of the mooring line specified in Table XV 25-1 of this Chapter according to the equipment number determined in 25.2 of this Chapter.

(ii) The design load on fittings is to take into account all acting loads.

(iii) The point where the mooring force acts on mooring fittings is to be taken as the attachment point of the mooring line.

(iv) The design load on fittings is to take into account the total design load on the line specified in 25.8.3(b)(i) of this Chapter (see Fig. XV 25-1 of this Chapter), but need not exceed twice the design load on the line.

(v) If the design load on fittings specified in 25.8.3(b)(i) to 25.8.3(b)(iv) of this Chapter is less than 1.25 times the intended mooring load stipulated in the construction specifications for the mooring fittings and their supporting structures used for mooring operations specified in 25.8.3(b)(i) of this Chapter, the design load on the fittings is to be at least 1.25 times the intended mooring load.

(vi) The design load applied to supporting hull structures for mooring winches is to be 1.25 times the intended maximum brake holding load.

(vii) The design load applied to supporting hull structures for capstans is to be 1.25 times the intended maximum hauling-in force.

(c) Selection of mooring fittings

Mooring fittings are generally to be specified according to standards approved by the Society.

(d) Allowable stresses of supporting structures

Allowable stresses of supporting structures are not to be more than below:

(i) Normal stress: 100% of the specified yield point for the material used

(ii) Shearing stress: 60% of the specified yield point for the material used

(e) Corrosion addition of supporting structures

For the corrosion addition of supporting structures, the value will be considered by the Society, but is not to be less than 2 mm.

(f) Safe working load (SWL)

(i) The SWL is not to exceed 80% of the design load on fittings specified in 25.8.3(b)(i) to 25.8.3(b)(v) of this Chapter or the design load specified in 25.8.3(b)(vi) or 25.8.3(b)(vii) of this Chapter.

(ii) The SWL of each fitting, excluding mooring winches and capstan, is to be marked by weld beads or equivalent on the fitting.

25.9 Towing and Mooring Arrangements Plan

25.9.1 Ship are to have a towing and mooring arrangements plan which includes the notes belows:

(a) Approval standard and referenced No. of towing and mooring fittings.

(b) For each towing and mooring fitting, information provided on the plan should include in respect of each shipboard fitting:

(i) location on the ship

(ii) SWL

(iii) purpose (mooring/harbour towing/escort towing)

(iv) method of applying load of towing or mooring line including limiting fleet angles.

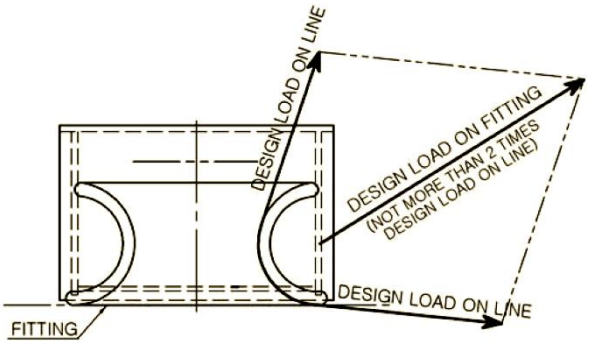

Fig. XV 25-1
Design load

Table XV 25-1
Anchors, Chain Cables and Ropes

Equipment number		Equipment numeral	Bower Anchors		Chain cable for anchor (stud anchor chain)				Tow line			Mooring ropes			
			Number	Mass per anchor (stockless anchor)	Total length	Diameter (mm)			Length	Breaking strength		Number	Length of each rope	Breaking strength	
Over	Up to			kg	m	Grade E1	Grade E2	Grade E3	m	Marks(1)	kN		m	Marks(1)	kN
50	70	E51	2	180	220	14	12.5		180	6×12	98	3	80	6×12	34
70	90	E52	2	240	220	16	14		180	6×12	98	3	100	6×12	37
90	110	E53	2	300	247.5	17.5	16		180	6×12	98	3	110	6×12	39
110	130	E54	2	360	247.5	19	17.5		180	6×12	98	3	110	6×12	44
130	150	E55	2	420	275	20.5	17.5		180	6×12	98	3	120	6×12	49
150	175	E56	2	480	275	22	19		180	6×12	98	3	120	6×12	54
175	205	E57	2	570	302.5	24	20.5		180	6×12	112	3	120	6×12	59
205	240	E58	2	660	302.5	26	22	20.5	180	6×12	129	4	120	6×12	64
240	280	E59	2	780	330	28	24	22	180	6×12	150	4	120	6×12	69
280	320	E60	2	900	357.5	30	26	24	180	6×12	174	4	140	6×12	74
320	360	E61	2	1020	357.5	32	28	24	180	6×12	207	4	140	6×12	78
360	400	E62	2	1140	385	34	30	26	180	6×24	224	4	140	6×12	88
400	450	E63	2	1290	385	36	32	28	180	6×24	230	4	140	6×12	98
450	500	E64	2	1440	412.5	38	34	30	180	6×24	277	4	140	6×12	108
500	550	E65	2	1590	412.5	40	34	30	190	6×24	306	4	160	6×12	123
550	600	E66	2	1740	440	42	36	32	190	6×24	338	4	160	6×12	133
600	660	E67	2	1920	440	44	38	34	190	6×24	371	4	160	6×12	147
660	720	E68	2	2100	440	46	40	36	190	6×24	406	4	160	6×12	157
720	780	E69	2	2280	467.5	48	42	36	190	6×24	441	4	170	6×12	172
780	840	E70	2	2460	467.5	50	44	38	190	6×24	480	4	170	6×12	186
840	910	E71	2	2640	467.5	52	46	40	190	6×24	518	4	170	6×12	201
910	980	E72	2	2850	495	54	48	42	190	6×37	559	4	170	6×12	216
980	1060	E73	2	3060	495	56	50	44	200	6×37	603	4	180	6×24	230
1060	1140	E74	2	3300	495	58	50	46	200	6×37	647	4	180	6×24	230
1140	1220	E75	2	3540	522.5	60	52	46	200	6×37	691	4	180	6×24	270
1220	1300	E76	2	3780	522.5	62	54	48	200	6×37	738	4	180	6×24	284
1300	1390	E77	2	4050	522.5	64	56	50	200	6×37	786	4	180	6×24	309
1390	1480	E78	2	4320	550	66	58	50	200	6×37	836	4	180	6×24	324
1480	1570	E79	2	4590	550	68	60	52	220	6×37	888	5	190	6×24	324
1570	1670	E80	2	4890	550	70	62	54	220	6×37	941	5	190	6×24	333

Notes:

(1) Where steel wire ropes are used, the following wire ropes corresponding to the marks shown in the Table are to be provided.

(2) Length of chain cables may be that including shackles for connection.

Chapter 26

Ships for Restricted Services

26.1 Application

26.1.1 Ships for restricted service

The requirements of this Chapter apply to the ships assigned with service restriction notation as specified in Table I 1-4 in Part I. The requirements in other chapters of this Part are still to be applied unless otherwise specified in this Chapter.

26.1.2 Statutory requirements

Notwithstanding the requirements of this Chapter, the ships are to comply with the relevant regulations of the Administration.

26.2 Ships for Coastal Service

26.2.1 Application

The requirements of this section apply to the ships for coastal service.

26.2.2 Reductions of scantlings of members

(a) The scantlings of structural members may be reduced by the ratios given in Table XV 26-1 as below in relation to the requirements in the relevant chapters, but in no cases are they to be less than each minimum scantling in the same Table.

Table XV 26-1
Reductions of Scantlings of Members for Coastal Service Ships

Item	Reduction Ratio	Minimum
Longitudinal strength	5%	-
Shell platings (including plate keels)	5%	6 mm, superstructure excluded
Minimum thickness of deck platings	1 mm	5 mm
Section modulus of frames (including bottom longitudinals)	10%	30 cm^3
Section modulus of beams	15%	-
Section modulus of deck girders	15%	-
Thickness of plates of double bottom members	1 mm	5.5 mm
Thickness of plates of single bottom members	0.5 mm	-
Plate thickness and section modulus of superstructure end bulkhead	10%	-

(b) Reductions of scantlings of members other than given in Table XV 26-1 above may be made at the discretion of the Society.

(c) The scantlings of the structural members of deck beams supporting deck cargoes, inner bottom plates and longitudinals supporting heavy cargoes and deep tanks, and the requirements deemed inappropriate by the Society, are not to be reduced from the values specified in the relevant chapters, notwithstanding the provisions in 26.2.2(a) and 26.2.2(b) above.

(d) The design pressure P_e given in 14.4.4 and 14.5.3(a)(iii) of this Part may be multiplied by 0.8.

(e) The design pressure of rectangular windows P given in 14.3.8(a) of this Part may be multiplied by 0.9.

26.2.3 Equipment

(a) The requirements for equipment are to be in accordance with the requirements of Chapter 25 of this Part.

(b) Notwithstanding the provision in 26.2.3(a) above, the mass of one of the two anchors may be reduced to 85% of the mass required in Table XV 25-1 of this Part.

(c) Notwithstanding the provision in 26.2.3(a) above, emergency towing procedures specified in 25.7 are not required for ships not engaged on international voyage.

26.2.4 Means of Access

Where deemed as appropriate by the Society, the requirements specified in 22.2 of this Part may be modified.

26.2.5 Means of embarkation and disembarkation

For ships not engaged on international voyages, the means of embarkation and disembarkation specified in 14.8 of this Part are not required.

26.3 Ships for Protected Water Service

26.3.1 Application

The requirements of this section are applicable to the ships to be classed for protected water service.

26.3.2 Reductions of scantlings of members

(a) The scantlings of structural members may be reduced by the ratios given in Table XV 26-2 of this Chapter in relation to the requirements in the relevant chapters, but in no cases are they to be less than each minimum scantling in the same table.

(b) Reductions of scantlings of members other than given in Table XV 26-2 of this Chapter may be made at the discretion of the Society.

Table XV 26-2
Reductions of Scantlings of Members for Protected Water Service Ships

Item	Reduction Ratio	Minimum
Longitudinal strength	10%	-
Shell platings (including plate keels)	10%	6 mm, superstructure excluded
Minimum thickness of deck platings	1 mm	5 mm
Section modulus of frames (including bottom longitudinals)	20%	30 cm^3
Section modulus of beams	15%	-
Section modulus of deck girders	15%	-
Thickness of plates of double bottom members	1 mm	5.5 mm
Thickness of plates of single bottom members	10% or 1 mm, whichever is smaller	-
Plate thickness and section modulus of superstructure end bulkhead	10%	-

(c) The scantlings of the structural members of deck beams supporting deck cargoes, inner bottom plates and longitudinals supporting heavy cargoes and deep tanks, and the requirements deemed inappropriate by the Society, are not to be reduced from the values specified in the relevant chapters, notwithstanding the provisions in 26.3.2(a) and 26.3.2(b) above.

(d) The design pressure P_e given in 14.4.4 and 14.5.3(a)(iii) of this Part may be multiplied by 0.8.

(e) The design pressure of rectangular windows P given in 14.3.8(a) of this Part may be multiplied by 0.9.

26.3.3 Hatchway covers

(a) The hatchway covers may be of shelter type.

(b) The thickness of steel hatchway cover, on which cargoes are not carried, may be 4.5 mm.

26.3.4 Equipment

Equipment is to be accordance with the requirements in 26.2.3 of this Chapter. However, equipment numeral in Table XV 25-1 of this Part may be degraded one rank from the requirements in 25.2 of this Part.

26.3.5 Means of Access

Where deemed as appropriate by the Society, the requirements specified in 28.2 of Part III may be modified.

26.3.6 Means of embarkation and disembarkation

For ships not engaged on international voyages, the means of embarkation and disembarkation specified in 14.8 are not required.

26.4 Ships not Engaged on International Voyages

26.4.1 Application

The requirements in this section apply to the ships not engaged on international voyages.

26.4.2 Relaxation to ships not engaged on international voyages

(a) For non-conventional ships, the requirements specified in 25.8 of this Part need not to be applied.

(b) Ships not engaged on international voyages need not apply the provisions of 14.8 of this Part.

(c) Ships not engaged on international voyages need not to apply the provisions of 25.7 of this Part.

Appendix 1

Guidance on Conditions for Loading Manual

A1.1 General

A1.1.1 This Chapter applies to ships whose length for freeboard L_f is 65 m and above.

A1.1.2 In order to enable the ship master to arrange for the loading of cargo and ballasting to avoid the occurrence of unacceptable stress in the ship's structure, ship are to be provided with a loading manual approved by the Society. However, for the follwing types of ships when their maximum deadweight does not exceed 30% of their maximum displacement, the requirements above may be dispensed with.

(a) Ships with an arrangement that allows only small possibilities of variation in the distribution of cargo and ballast.

(b) Ships in regular service that perform standard loading. However, it is to be clearly stated either in the "Stability Information" as stipulated in 1.16.1 of Part I, or in some other suitable document that no non-standard loading is to be performed.

(c) Ships other than those stipulated in Appendix 1.2 of Part II.

A1.1.3 For ships not required to be provided with a loading manual, the precautions for loading, such as the maximum allowable cargo weight on deck, are to be recorded either in the "Stability Information" as stipulated in 1.16.1 of Part I, or in some other suitable document.

A1.2 Loading Manual

A1.2.1 The loading manual is to include at least the following items.

(a) The loading conditions on which the design of the ship has been based, including permissible limits of longitudinal still water bending moment and still water shearing force.

(b) Results of calculations of longitudinal still water bending moment and still water shearing force corresponding to the loading conditions

(c) Allowable limits of local loads applied to hatch covers, deck, double bottom construction, etc., where deemed necessary by the Society

Tel: *+886 2 25062711*
Fax: *+886 2 25074722*
E-mail: *cr.tp@crclass.org*
Website: *http://www.crclass.org*
© CR – All rights reserved